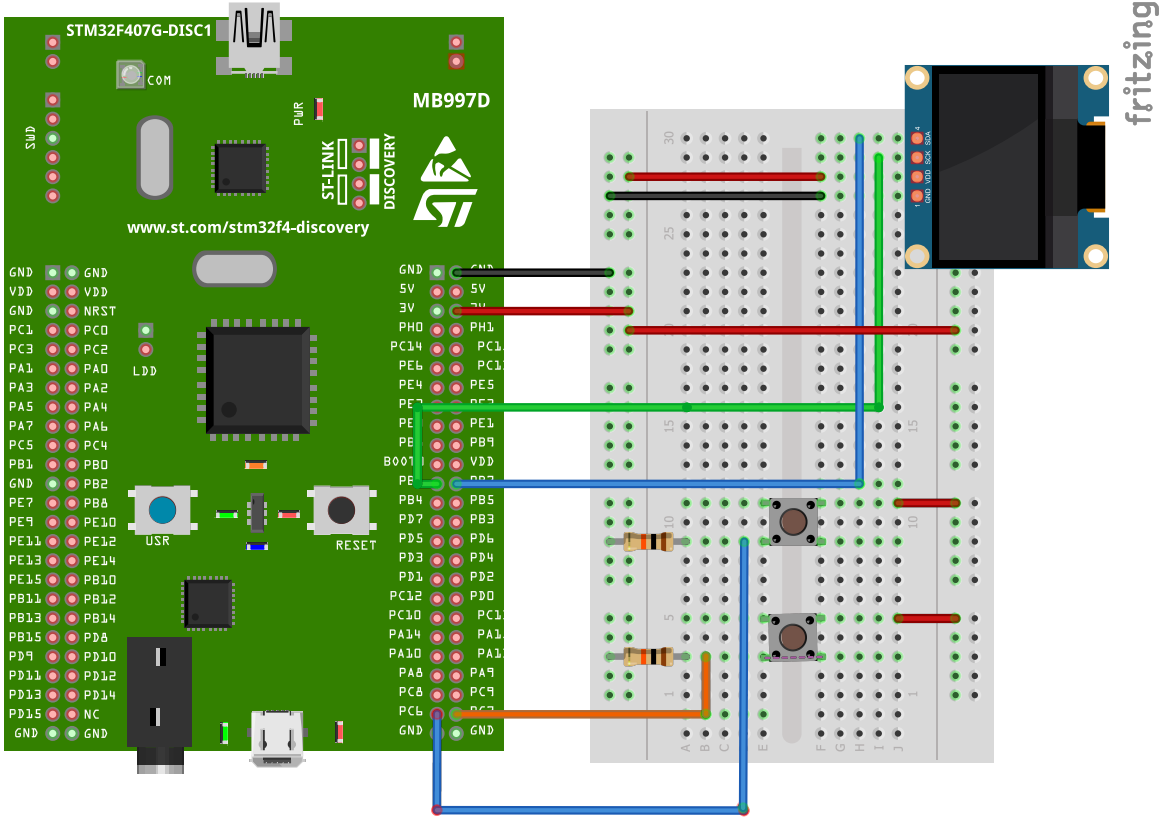
STM32F407G-DISC1
COM
SWD
PWR
MB997D
ST-LINK
DISCOVERY
www.st.com/stm32f4-discovery
GND
VDD
GND
PC1
PC3
PA1
PA3
PA5
PA7
PC5
PB1
GND
PE7
PE9
PE11
PE13
PE15
PB11
PB13
PB15
PD9
PD11
PD13
PD15
GND
GND
VDD
NRST
PC0
PC2
PA0
PA2
PA4
PA6
PC4
PB0
PB2
PB8
PE10
PE12
PE14
PB10
PB12
PB14
PD8
PD10
PD12
PD14
NC
GND
LDD
USR
RESET
GND
5V
3V
PH0
PC14
PE6
PE4
PE1
PB9
B00T1
VDD
PB4
PD7
PD5
PD3
PD1
PC12
PC10
PA14
PA10
PA8
PC8
PC6
GND
GND
5V
PH1
PC13
PE5
PB5
PB3
PB6
PD4
PD2
PD0
PC11
PA13
PA9
PC9
GND
GND
VCC SCL SDA GND
30
25
15
10
5
1
A
B
C
E
F
G
H
I
J
fritzing