Release	Date	Designer	Check	Comments
A1	10/01/2023	EB	SN	Initial drawing
A2	22/03/2023	EB	SN	[fixed] D1 is in the right direction (and DNP) [changed] top silk of NC214 (pin 1)
				ToDo: – [???] remplacer double mesures de courant de phase par mesure simple high side ? – [???] virer mesures température / contrôle fan – [???] changer connecteur flex pour un sliding

Major Tom is a power board driving 3 BLDC motors. It also add 3 temperature measurements and a fan control.

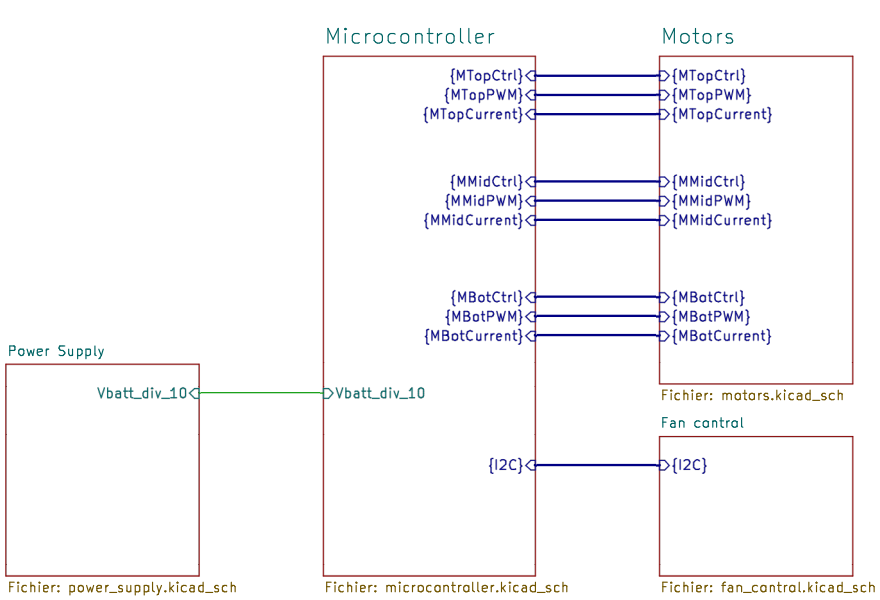

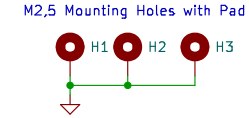

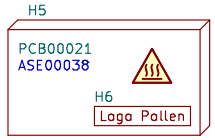

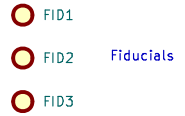

Pollen Robotics

Sheet: /
File: carte_Major_Tom.kicad_sch

Title: Major Tom

Size: A4	Date: 2023-03-22	**Rev: A2**
KiCad E.D.A. kicad 6.0.2+dfsg-1		Id: 1/5

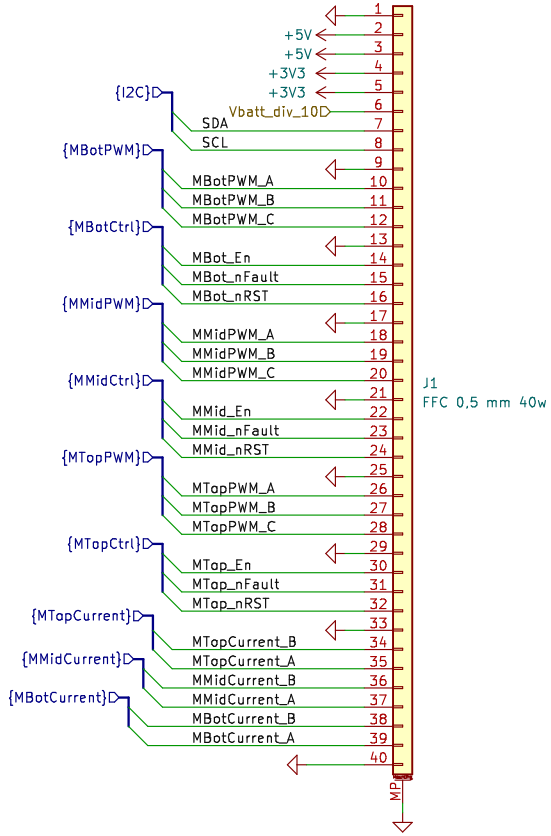

POLLEN ROBOTICS

Pollen Robotics

Sheet: /Microcontroller/
File: microcontroller.kicad_sch

Title: Major Tom

Size: A4	Date: 2023-03-22	**Rev: A2**
KiCad E.D.A. kicad 6.0.2+dfsg-1		Id: 2/5

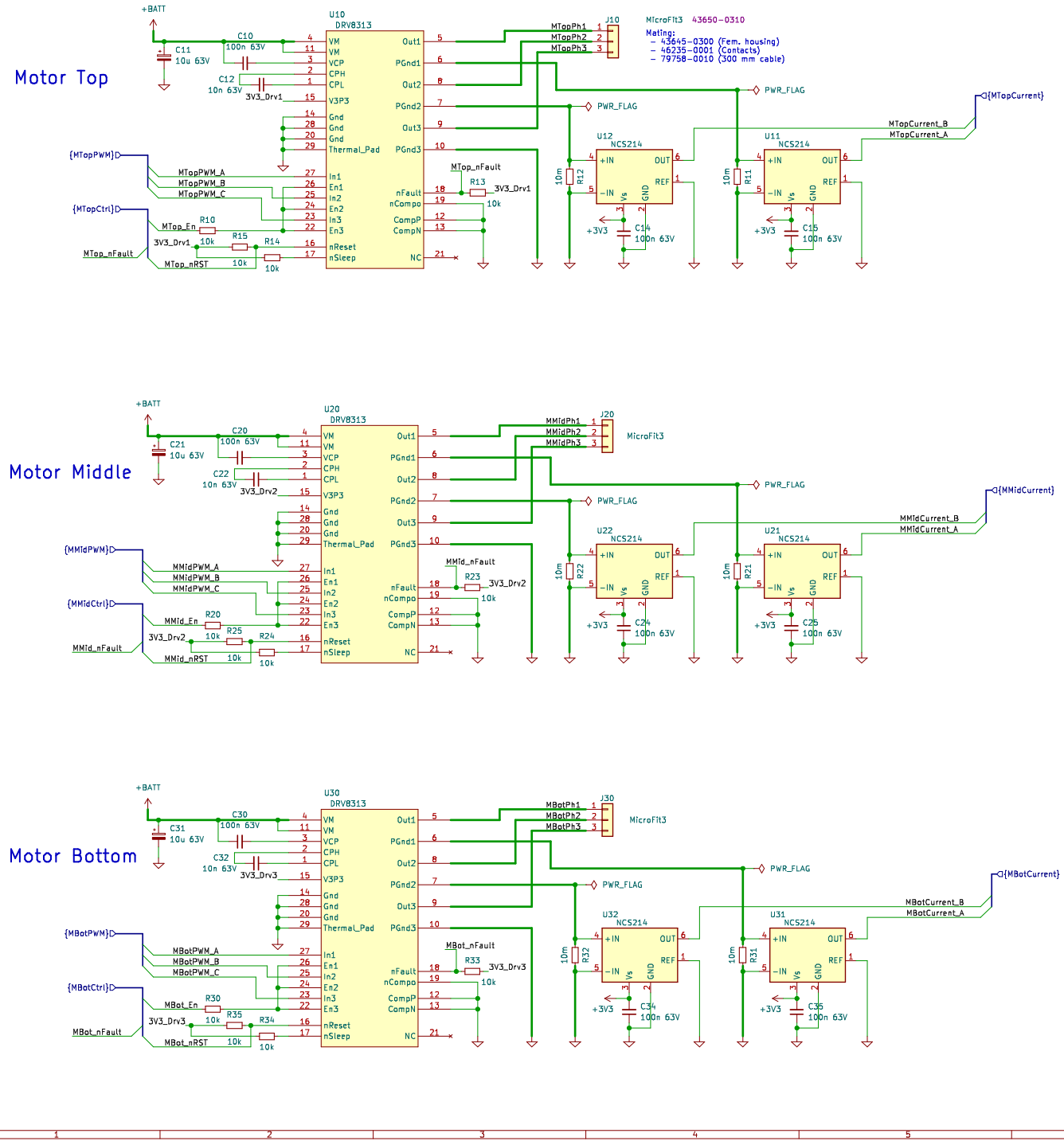

Nota :
- Only 2 current measurements are required
- Motor cabling (Maxon ECX TORQUE 22 M 24V):
  - phases in AWG18 (MicroFit AWG20-24)
  - encoders in AWG26 (PicoBlade AWG28-32).
  so more or less OK...

Low-side phase currentSense requires sync between ADC and PWM (but cheap amplifiers).

https://docs.simplefoc.com/current_sense
(In-line Current Sense requires filtered bi-dir amplifiers that are not easy to source.)

Low-side Current Sense
- Vref 3.3V, gain 100V/V, R 10 mOhm
  -> 3.3 A max / 0.2 W -> [1206]
- Amplifier, gain 100V/V, package SC70-6 :
  - TSC214IYCT (STMicro)
  - NCS214RSQT2G (On Semi)

POLLEN ROBOTICS

Pollen Robotics
Sheet: /Motors/
File: motors.kicad_sch

Title: Major Tom

Size: A3	Date: 2023-03-22	**Rev: A2**
KiCad E.D.A. kicad 6.0.2+dfsg-1		Id: 3/5

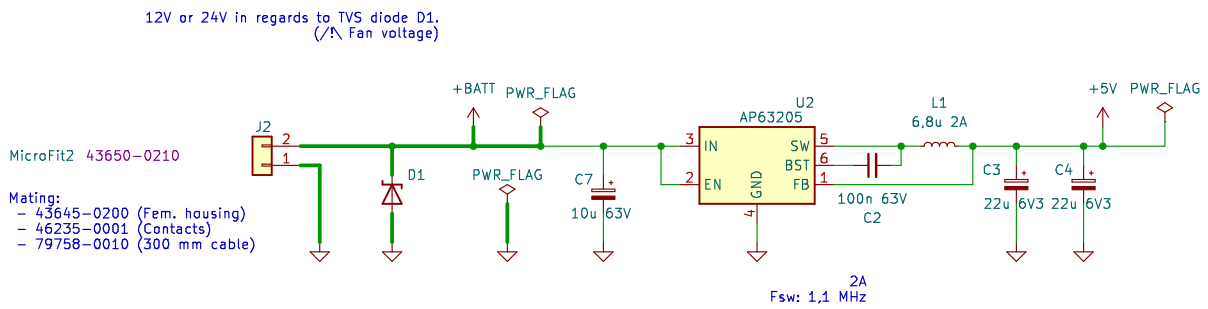

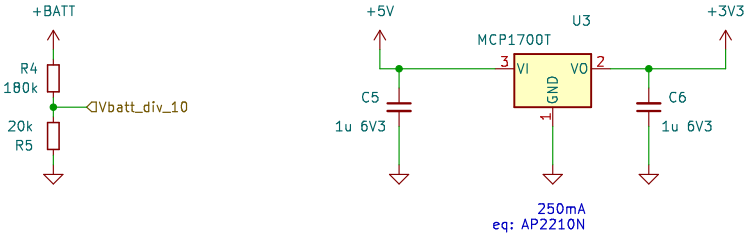

POLLEN ROBOTICS

Pollen Robotics

Sheet: /Power Supply/
File: power_supply.kicad_sch

Title: Major Tom

Size: A4	Date: 2023-03-22	**Rev: A2**
KiCad E.D.A. kicad 6.0.2+dfsg-1		Id: 5/5

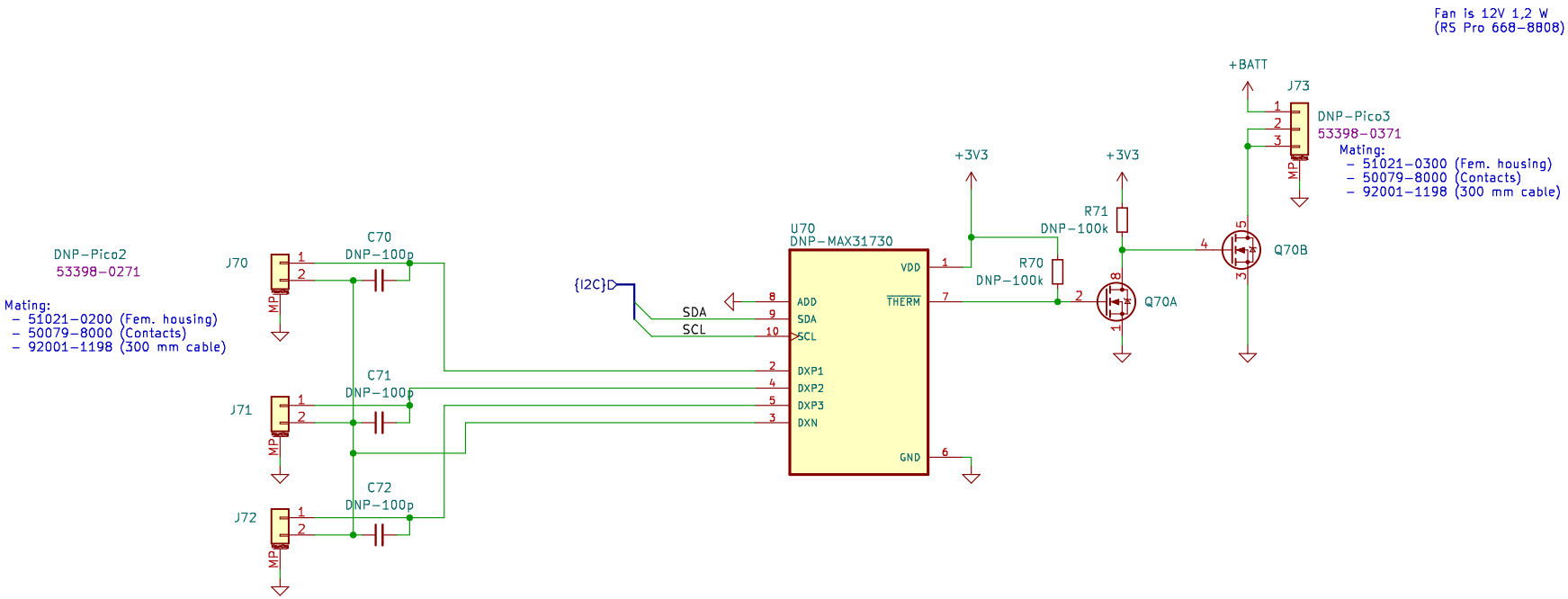

POLLEN ROBOTICS

Pollen Robotics

Sheet: /Fan control/
File: fan_control.kicad_sch

Title: Major Tom

Size: A4	Date: 2023-03-22	**Rev: A2**
KiCad E.D.A. kicad 6.0.2+dfsg-1		Id: 5/5