Release	Date	Designer	Check	Comments
A1	09/02/2026	EB	MR	Initial drawing
B1	25/02/2026	EB	MR	[fix] Inverterd connectors

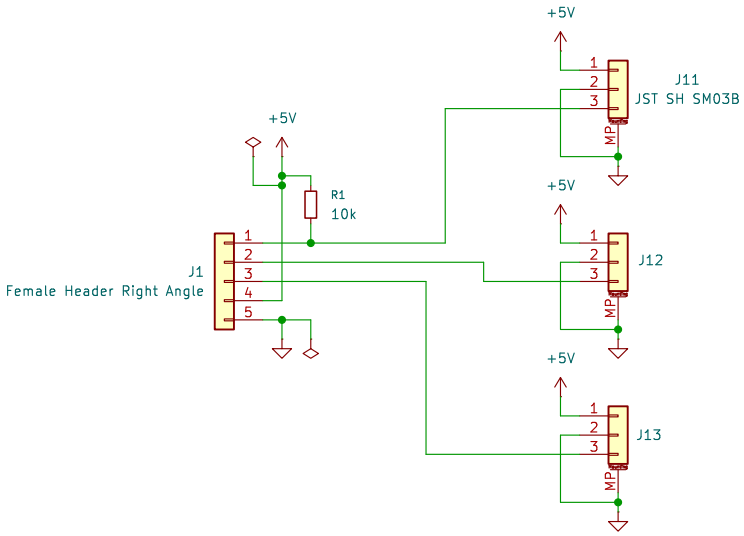

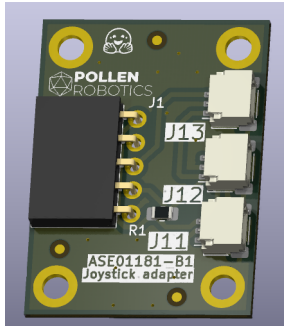

Fiducials

Mounting Holes M2,5

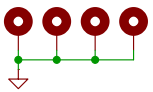

POLLEN ROBOTICS

Pollen Robotics/HF

Sheet: /

File: elec_martino_amazing_cable.kicad_sch

Title: elec Martino Joystick Adapter

Size: A4	Date: 2026-02-25	**Rev: B1**
KiCad E.D.A. 9.0.7		Id: 1/1