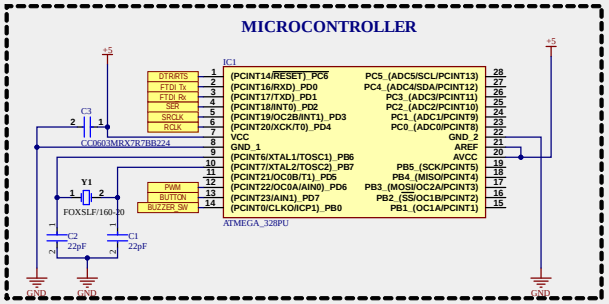

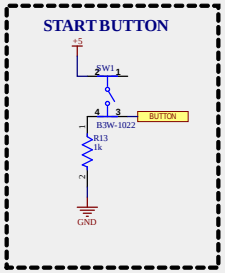

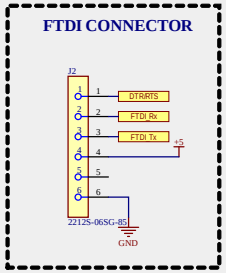

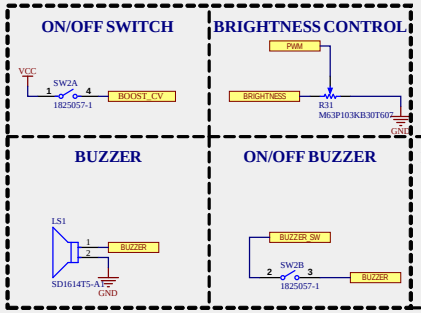

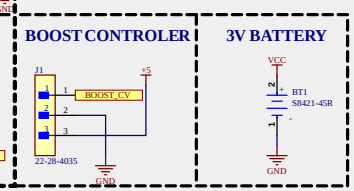

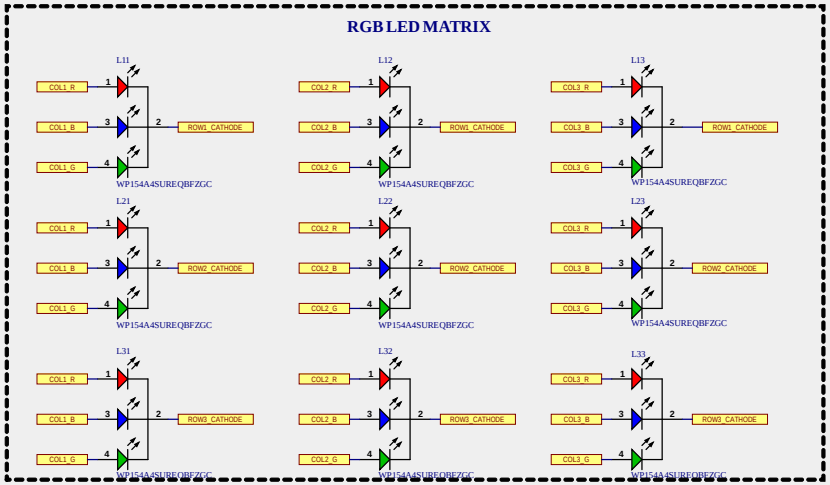

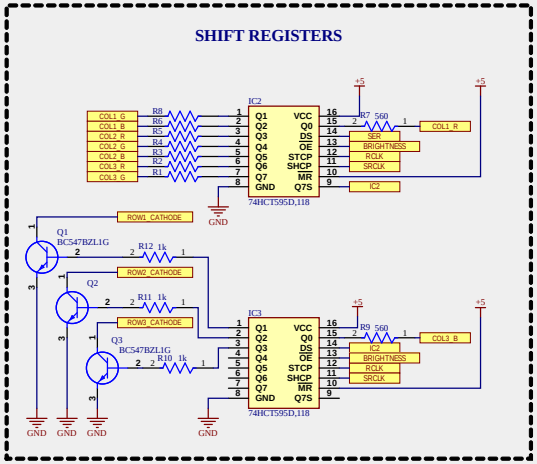

Title		
Size: Orcad C	Number	Revision
Date: 3/23/2026	Sheet of	
File: C:\Users\..\Slot.SchDoc	Drawn By:	