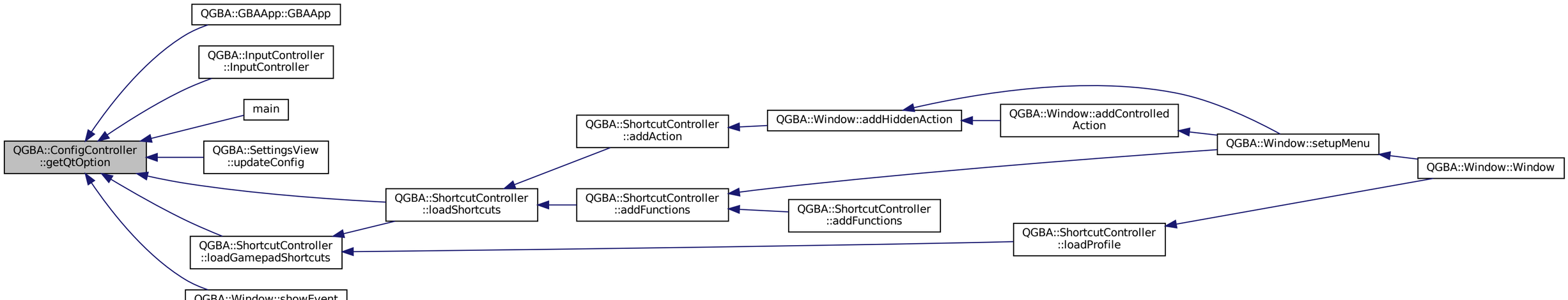
QGBA::ConfigController
::getQtOption
QGBA::GBAApp::GBAApp
QGBA::InputController
::InputController
main
QGBA::SettingsView
::updateConfig
QGBA::ShortcutController
::loadShortcuts
QGBA::ShortcutController
::loadGamepadShortcuts
QGBA::Window::showEvent
QGBA::ShortcutController
::addAction
QGBA::ShortcutController
::addFunctions
QGBA::Window::addHiddenAction
QGBA::Window::addControlled
Action
QGBA::ShortcutController
::addFunctions
QGBA::Window::setupMenu
QGBA::ShortcutController
::loadProfile
QGBA::Window::Window