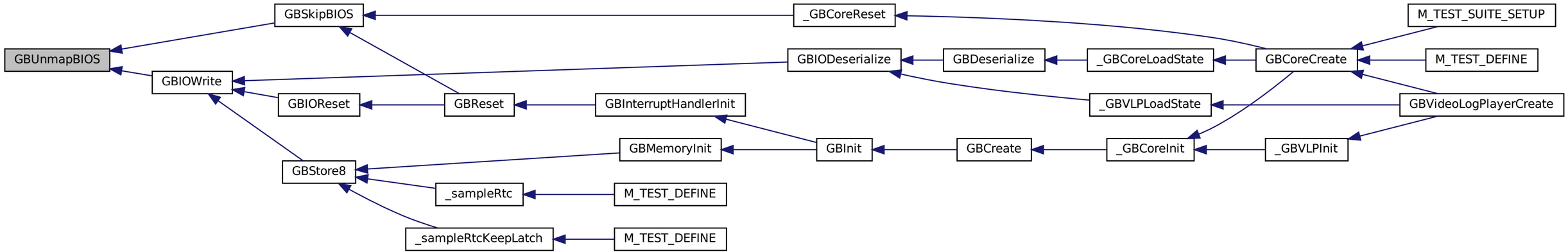
GBUnmapBIOS
GBSkipBIOS
GBIOWrite
GBIOReset
GBReset
GBInterruptHandlerInit
GBStore8
GBMemoryInit
_sampleRtc
M_TEST_DEFINE
_sampleRtcKeepLatch
M_TEST_DEFINE
_GBCoreReset
GBIODeserialize
GBDeserialize
_GBCoreLoadState
GBCoreCreate
M_TEST_SUITE_SETUP
M_TEST_DEFINE
_GBVLPLoadState
GBVideoLogPlayerCreate
GBInit
GBCreate
_GBCoreInit
_GBVLPInit