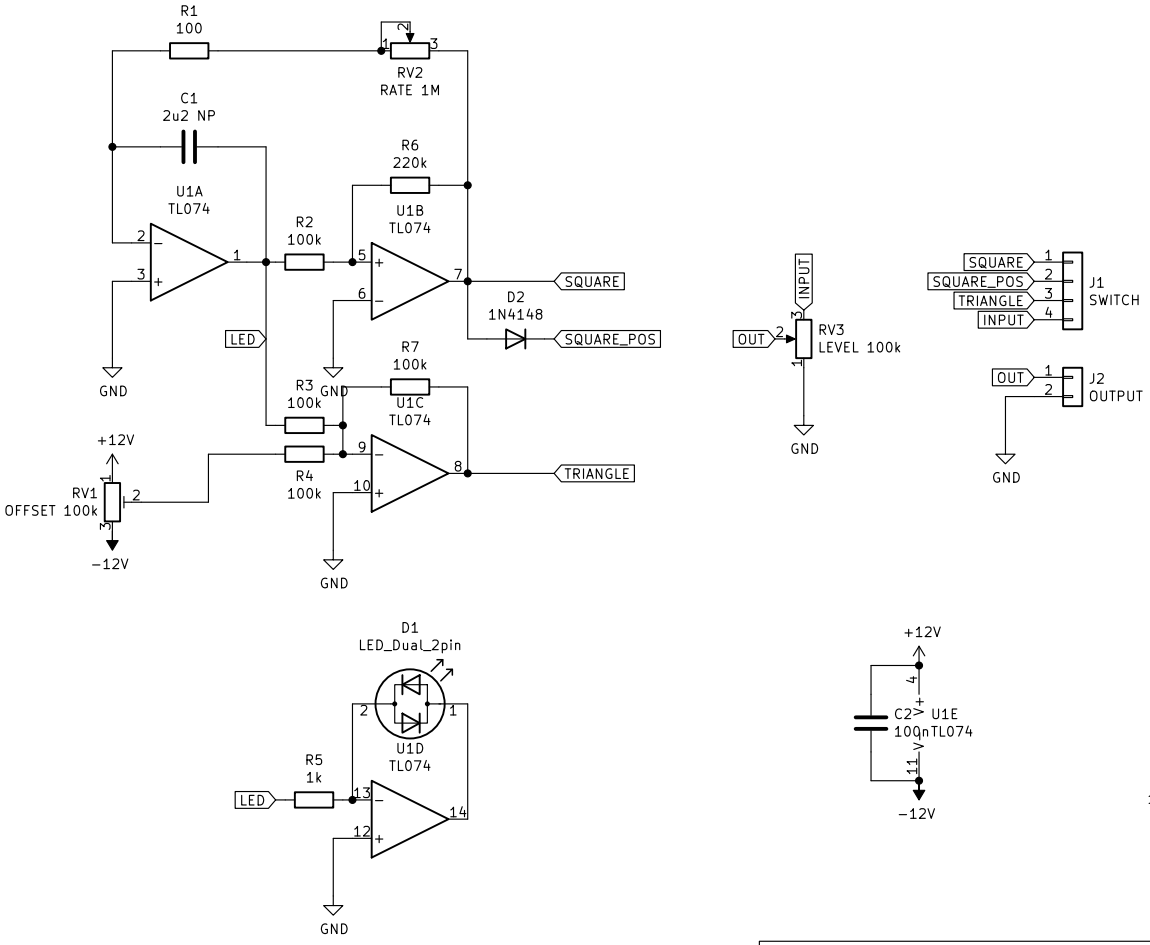

github.com/polykit

Jan Knipper

Sheet: /

File: lfo.sch

Title: LFO

Size: A4	Date: 2021-09-25	**Rev: v1.0.0**
KiCad E.D.A. kicad 6.0.1-79c1e3a40b~116~ubuntu21.10.1		Id: 1/1