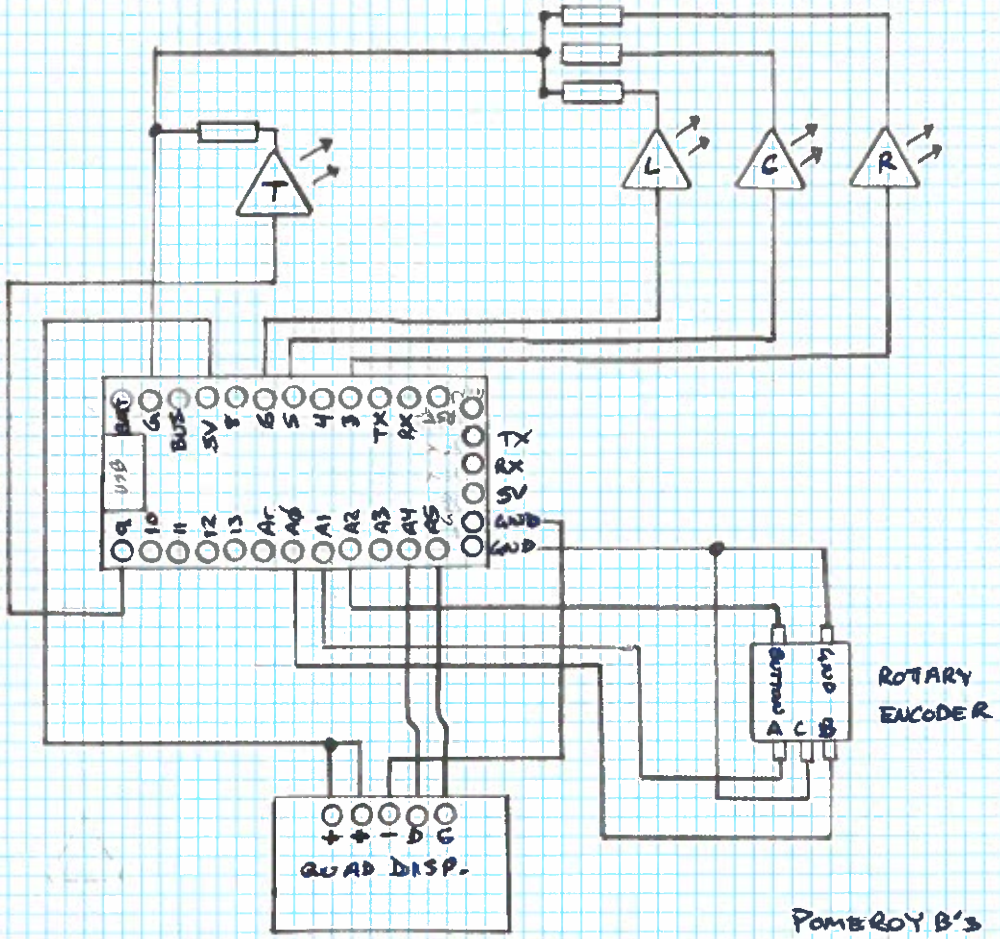

POMEROY B's
RICK & MORTY
PORTAL GUN

SCHEMATIC BY
Reaghan K