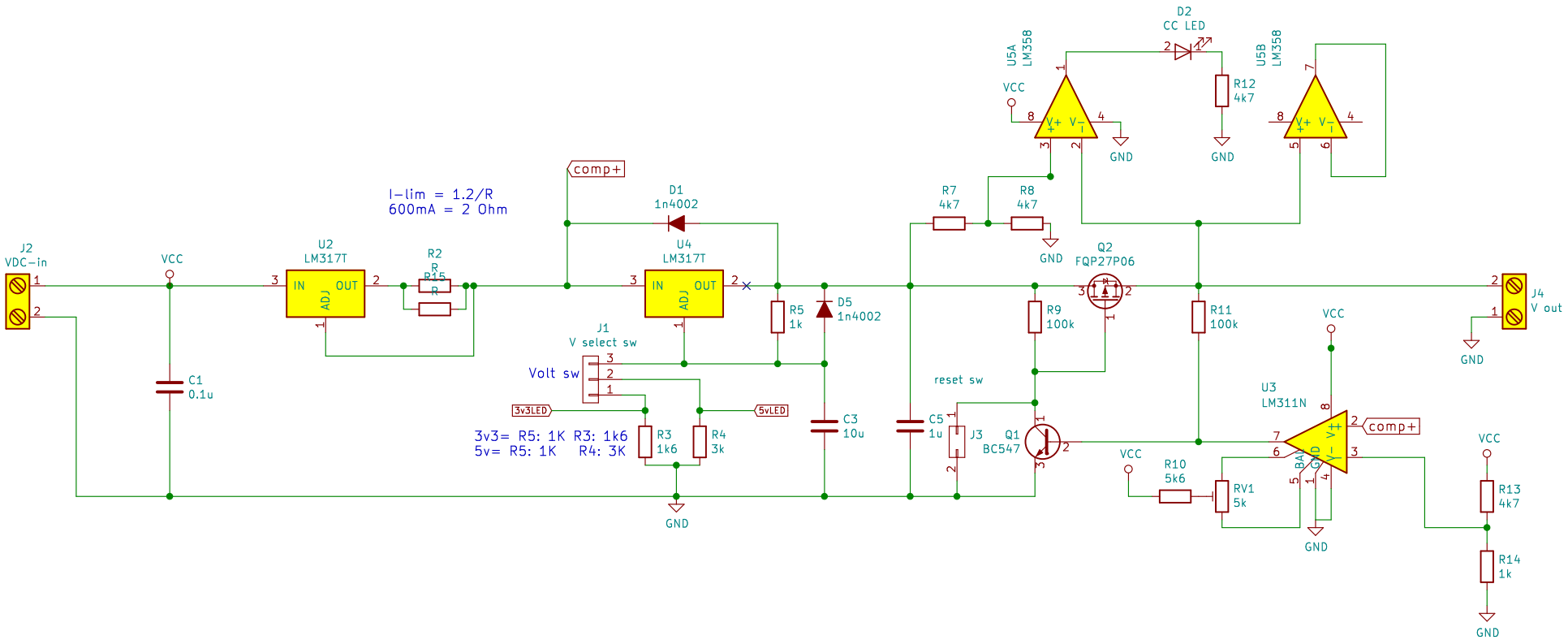

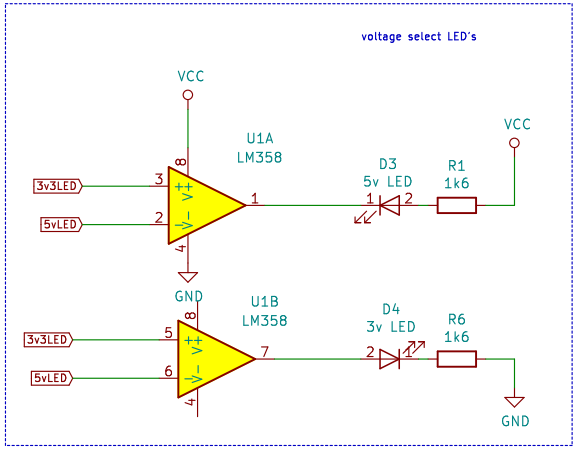

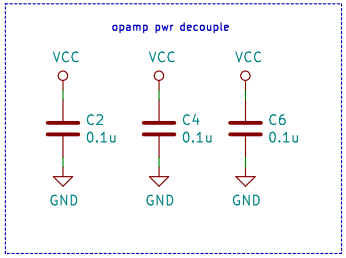

Sheet: /
File: Small psu.sch

Title: Tiny lab psu

Size: A4	Date: 2017-08-11	Rev:
KiCad E.D.A. kicad (2017-06-12 revision 8590a2299)-makepkg		Id: 1/1