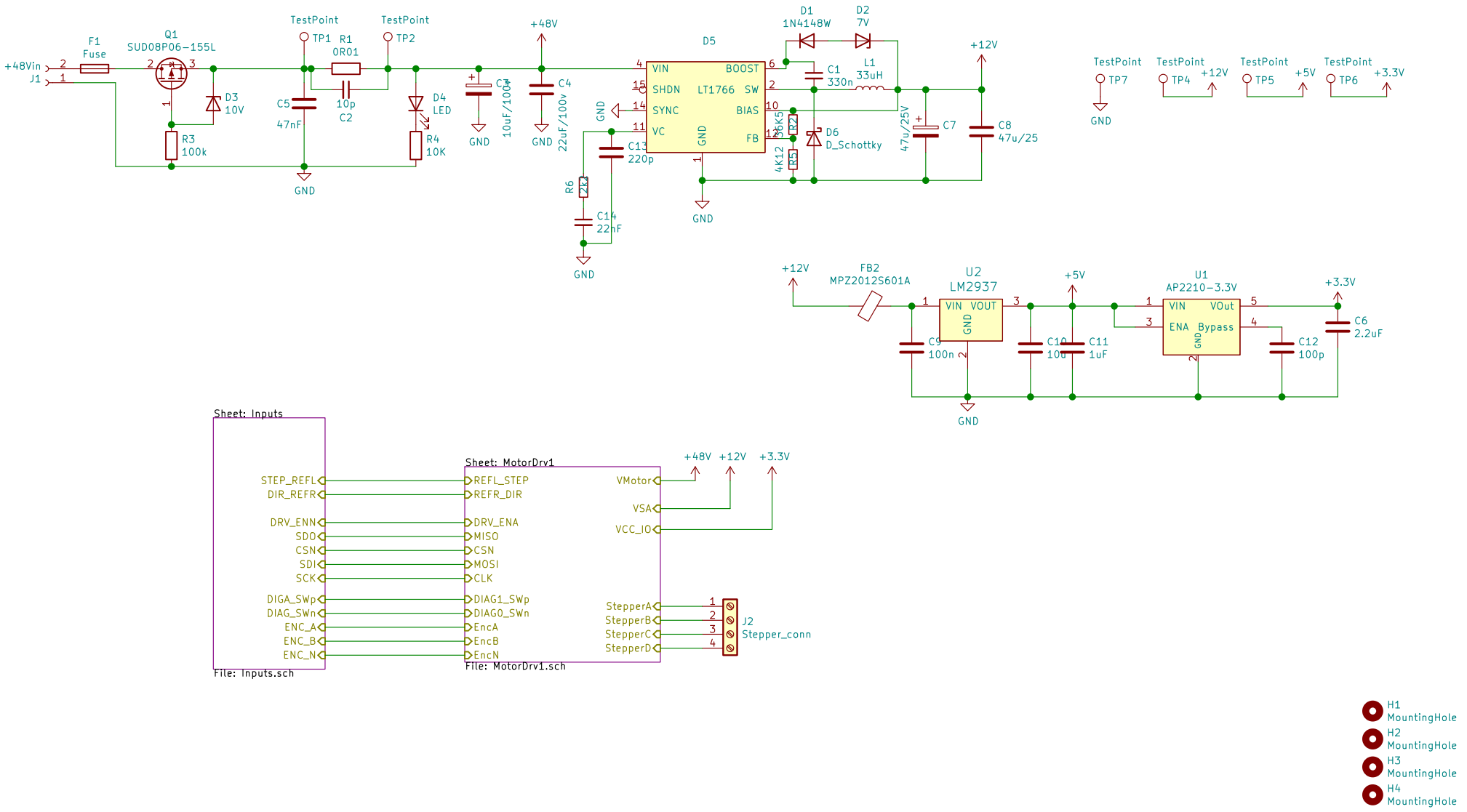

Design not proven

Sheet: /

File: TMC51604Axis.sch

Title:

Size: A4	Date: 2020-05-23	**Rev: A**
KiCad E.D.A. kicad (5.1.6)-1		Id: 1/3

Comments and values from page 19
TMC5160 DATASHEET (Rev. 1.10 / 2019-FEB-05)

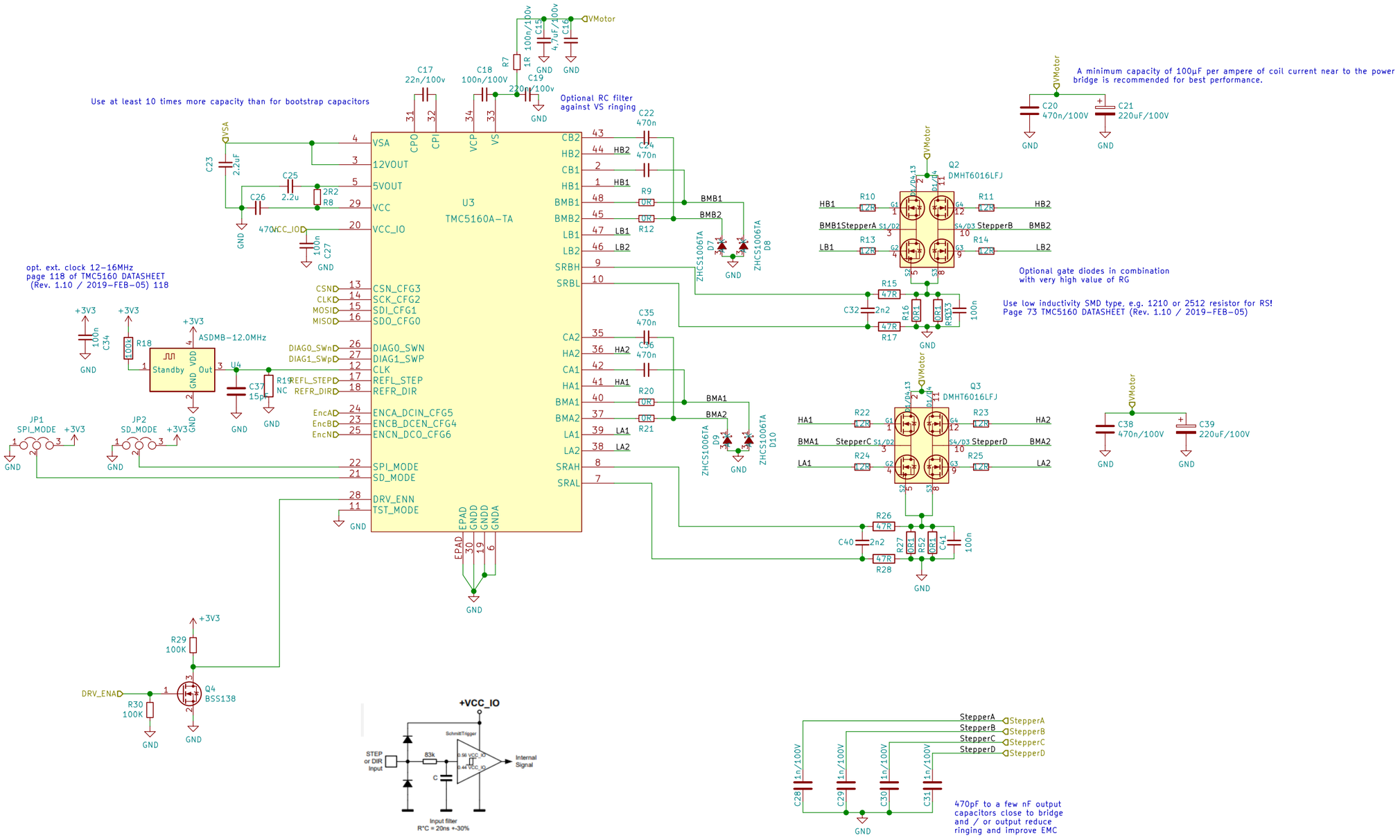

Sheet: /MotorDrv1/
File: MotorDrv1.sch

Title:

Size: A3	Date:	Rev:
KiCad E.D.A. kicad (5.1.6)-1		Id: 2/3

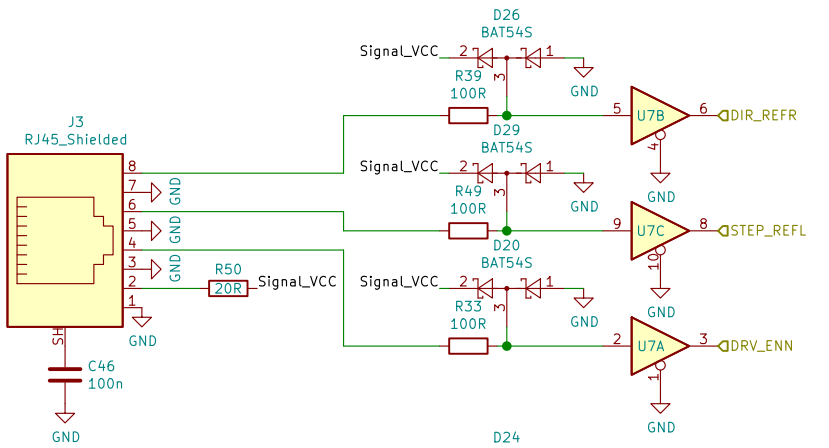

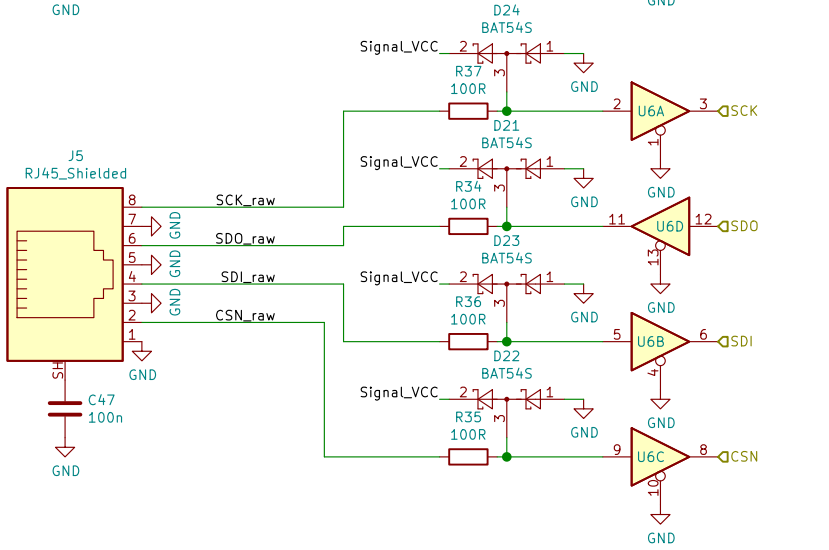

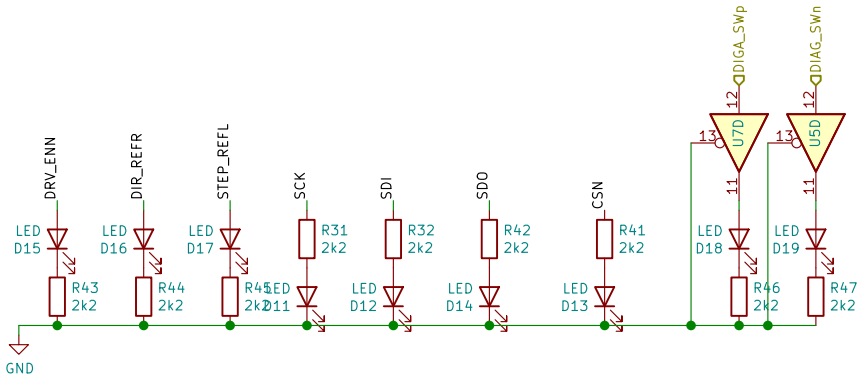

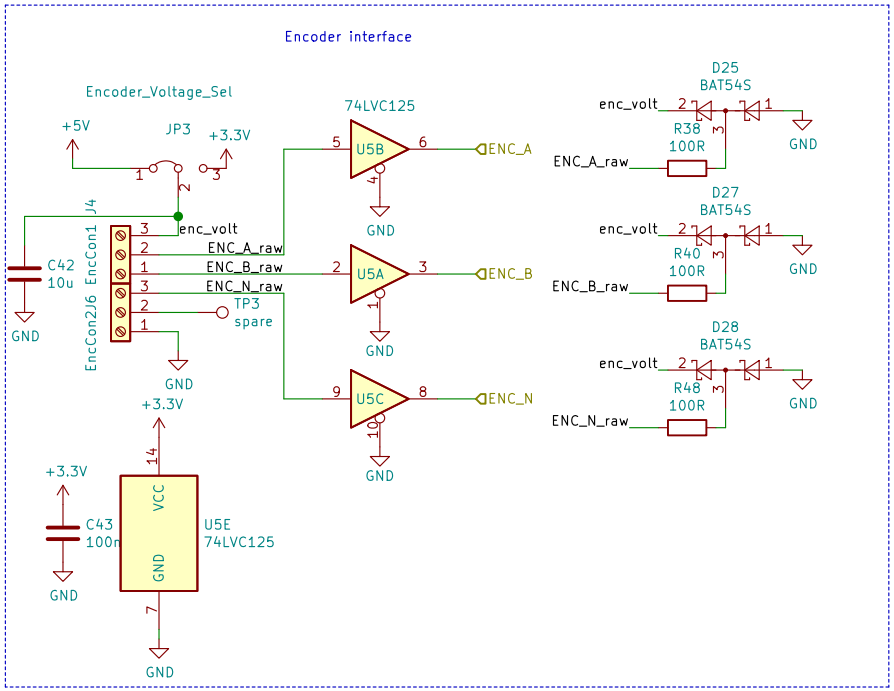

Pin List 5160StepStick pinout

Left	Signal	Right	Signal
1	DIR/REFR (depends on mode)	9	GND
2	STEP/REFL (depends on mode)	10	VCC_IO (3.3V or 5V)
3	CLK (pull to GND for internal CLK)	11	B2 (Motor Phase B)
4	SDO (data out)	12	B1 (Motor Phase B)
5	CSN (active low)	13	A1 (Motor Phase A)
6	SCK (up to 6 MHz with external CLK)	14	A2 (Motor Phase A)
7	SDI (data in)	15	GND
8	DRV_ENN (active low)	16	+VM (9-24V)

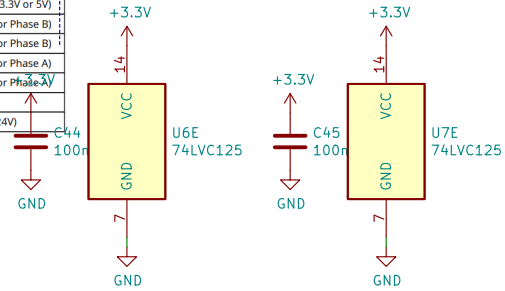

Sheet: /Inputs/
File: Inputs.sch

Title:

Size: A4	Date:	Rev:
KiCad E.D.A. kicad (5.1.6)-1		Id: 3/3