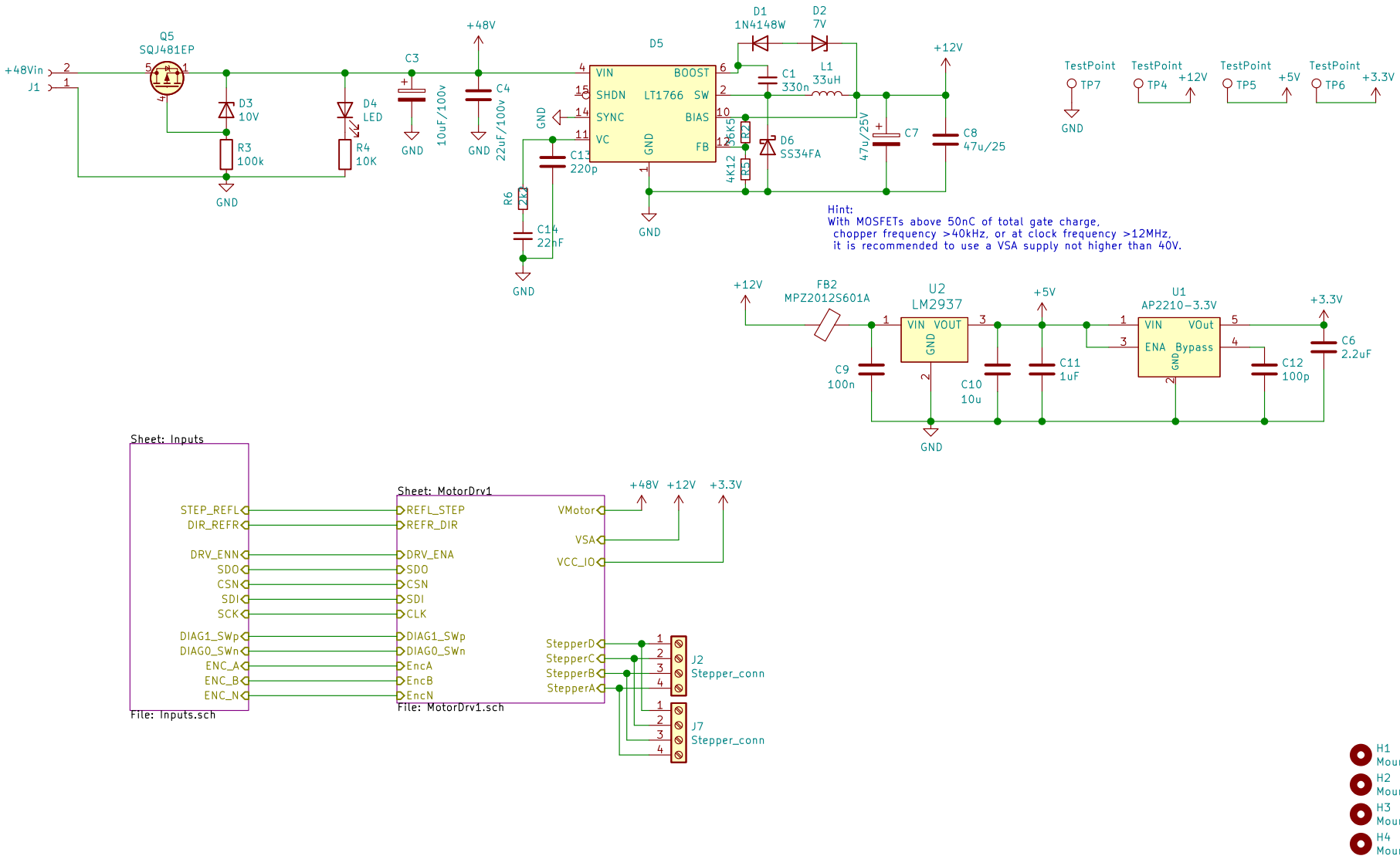

Design not proven

Sheet: /
File: TMC51604Axis.sch

Title:

Size: A4	Date: 2021-01-01	**Rev: v2**
KiCad E.D.A. kicad (5.1.8)-1		Id: 1/3

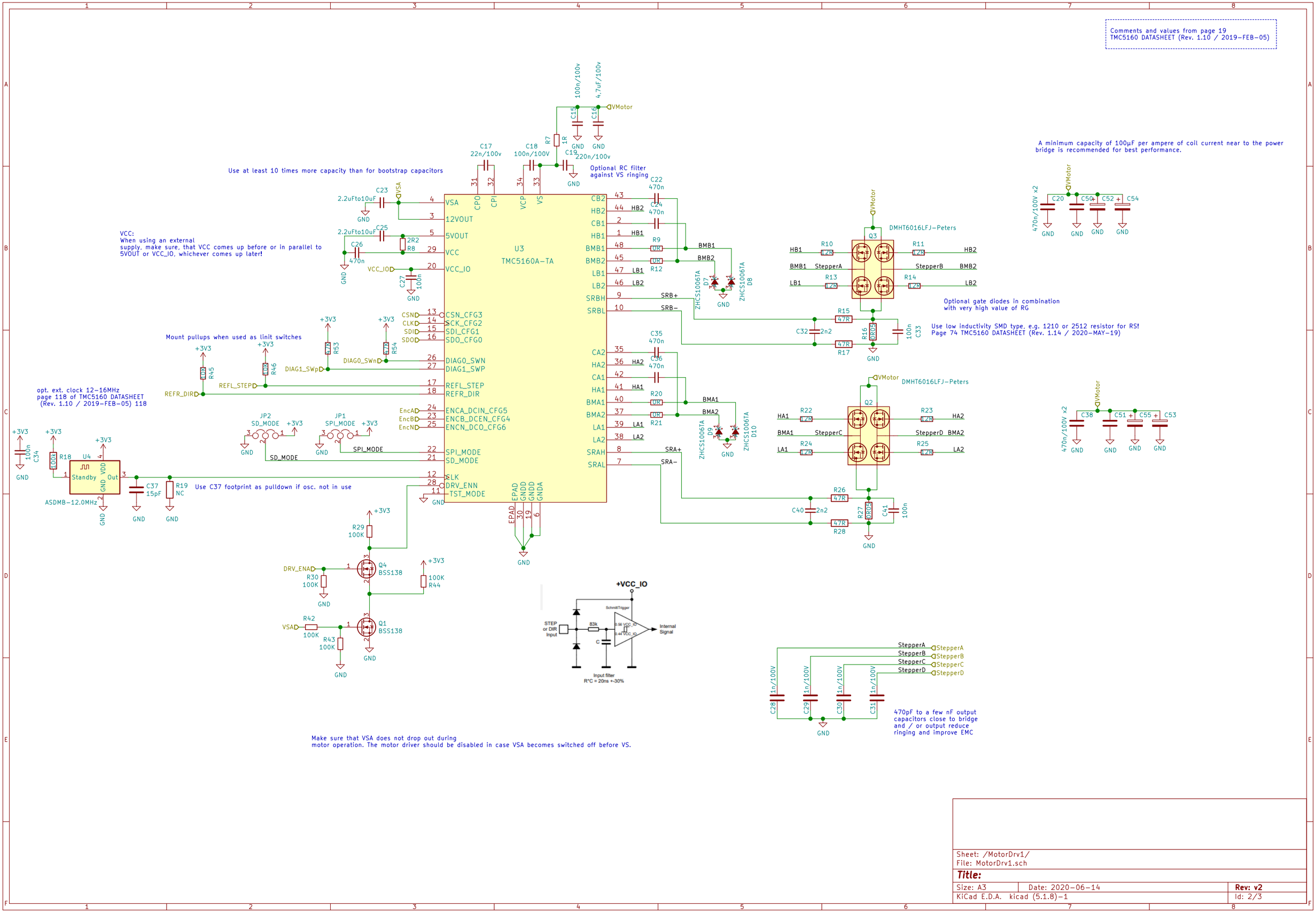
Comments and values from page 19
TMC5160 DATASHEET (Rev. 1.10 / 2019-FEB-05)
Use at least 10 times more capacity than for bootstrap capacitors
Optional RC filter
against VS ringing
A minimum capacity of 100µF per ampere of coil current near to the power
bridge is recommended for best performance.
VCC:
When using an external
supply, make sure, that VCC comes up before or in parallel to
5VOUT or VCC_IO, whichever comes up later!
U3
TMC5160A-TA
DMHT6016LFJ-Peters
Optional gate diodes in combination
with very high value of RG
Use low inductivity SMD type, e.g. 1210 or 2512 resistor for RS!
Page 74 TMC5160 DATASHEET (Rev. 1.14 / 2020-MAY-19)
Mount pullups when used as linit switches
opt. ext. clock 12-16MHz
page 118 of TMC5160 DATASHEET
(Rev. 1.10 / 2019-FEB-05) 118
ASDMB-12.0MHz
Use C37 footprint as pulldown if osc. not in use
+VCC_IO
Input filter
R*C = 20ns +-30%
470pF to a few nF output
capacitors close to bridge
and / or output reduce
ringing and improve EMC
Make sure that VSA does not drop out during
motor operation. The motor driver should be disabled in case VSA becomes switched off before VS.
Sheet: /MotorDrv1/
File: MotorDrv1.sch
Title:
Size: A3
Date: 2020-06-14
Rev: v2
KiCad E.D.A. kicad (5.1.8)-1
Id: 2/3

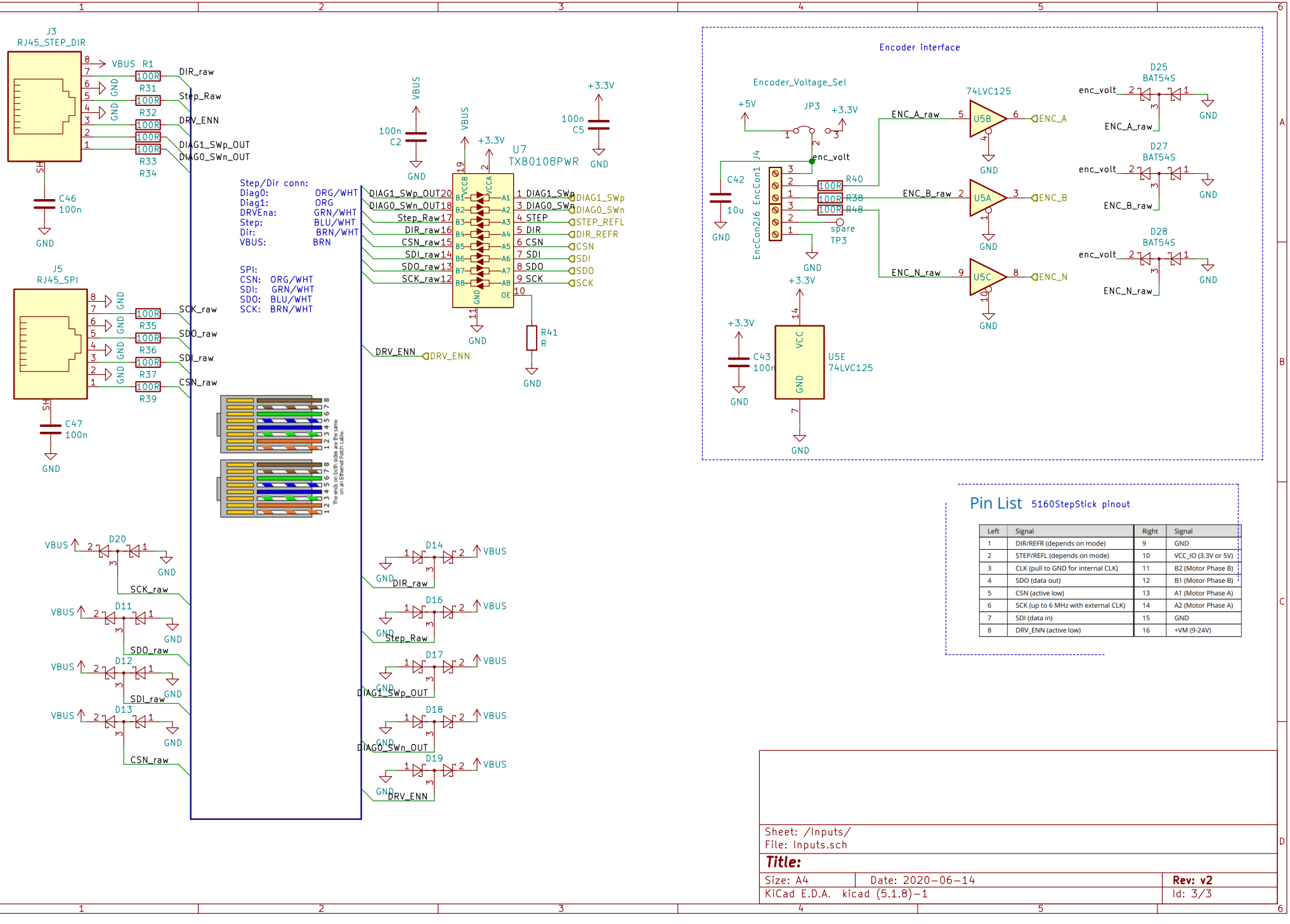

Pin List 5160StepStick pinout

Left	Signal	Right	Signal
1	DIR/REFR (depends on mode)	9	GND
2	STEP/REFL (depends on mode)	10	VCC_IO (3.3V or 5V)
3	CLK (pull to GND for internal CLK)	11	B2 (Motor Phase B)
4	SDO (data out)	12	B1 (Motor Phase B)
5	CSN (active low)	13	A1 (Motor Phase A)
6	SCK (up to 6 MHz with external CLK)	14	A2 (Motor Phase A)
7	SDI (data in)	15	GND
8	DRV_ENN (active low)	16	+VM (9-24V)

Sheet: /Inputs/
File: Inputs.sch

Title:

Size: A4	Date: 2020-06-14	**Rev: v2**
KiCad E.D.A. kicad (5.1.8)-1		Id: 3/3