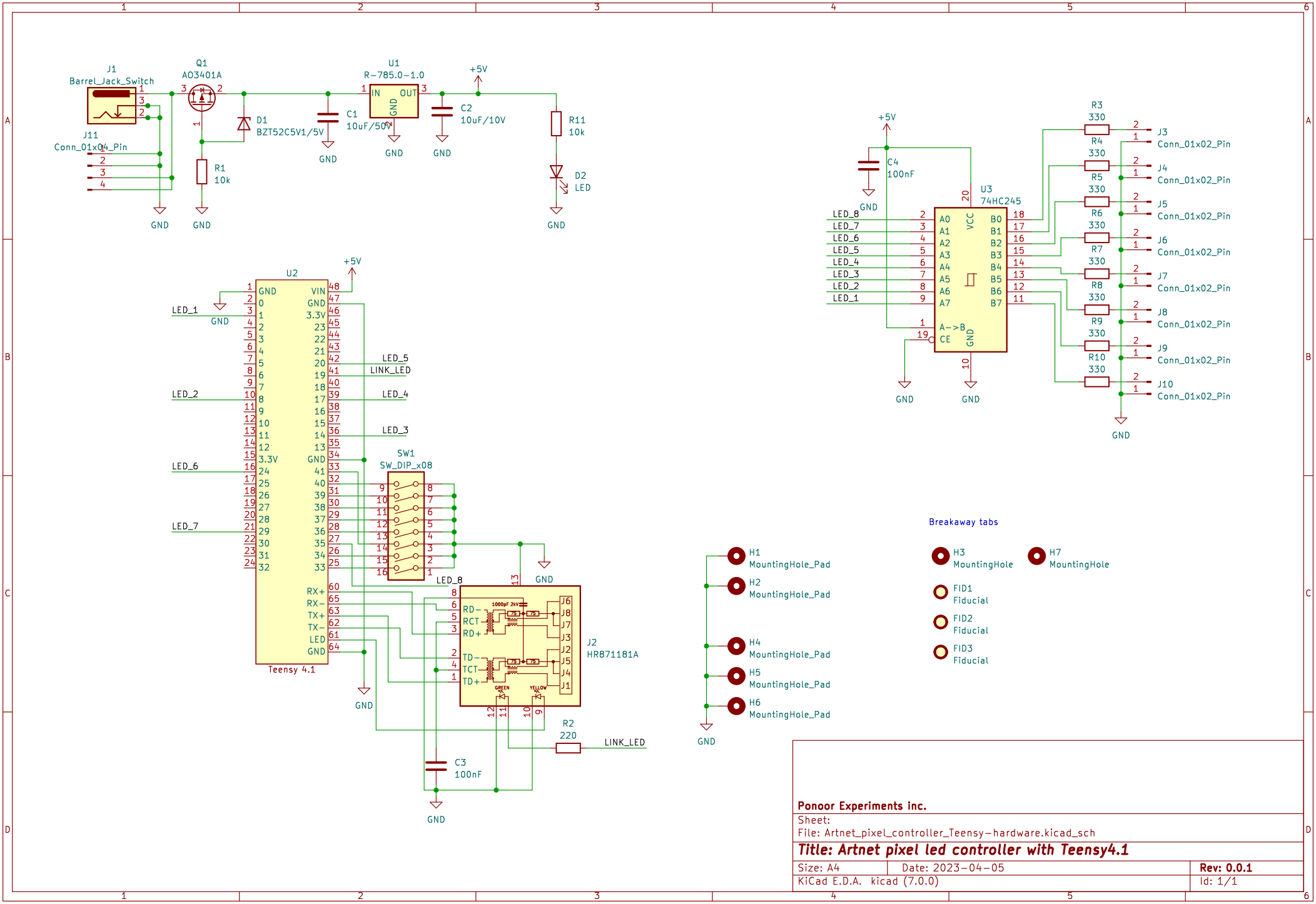

Ponoor Experiments inc.

Sheet:

File: Artnet_pixel_controller_Teensy-hardware.kicad_sch

Title: Artnet pixel led controller with Teensy4.1

Size: A4	Date: 2023-04-05	**Rev: 0.0.1**
KiCad E.D.A. kicad (7.0.0)		Id: 1/1