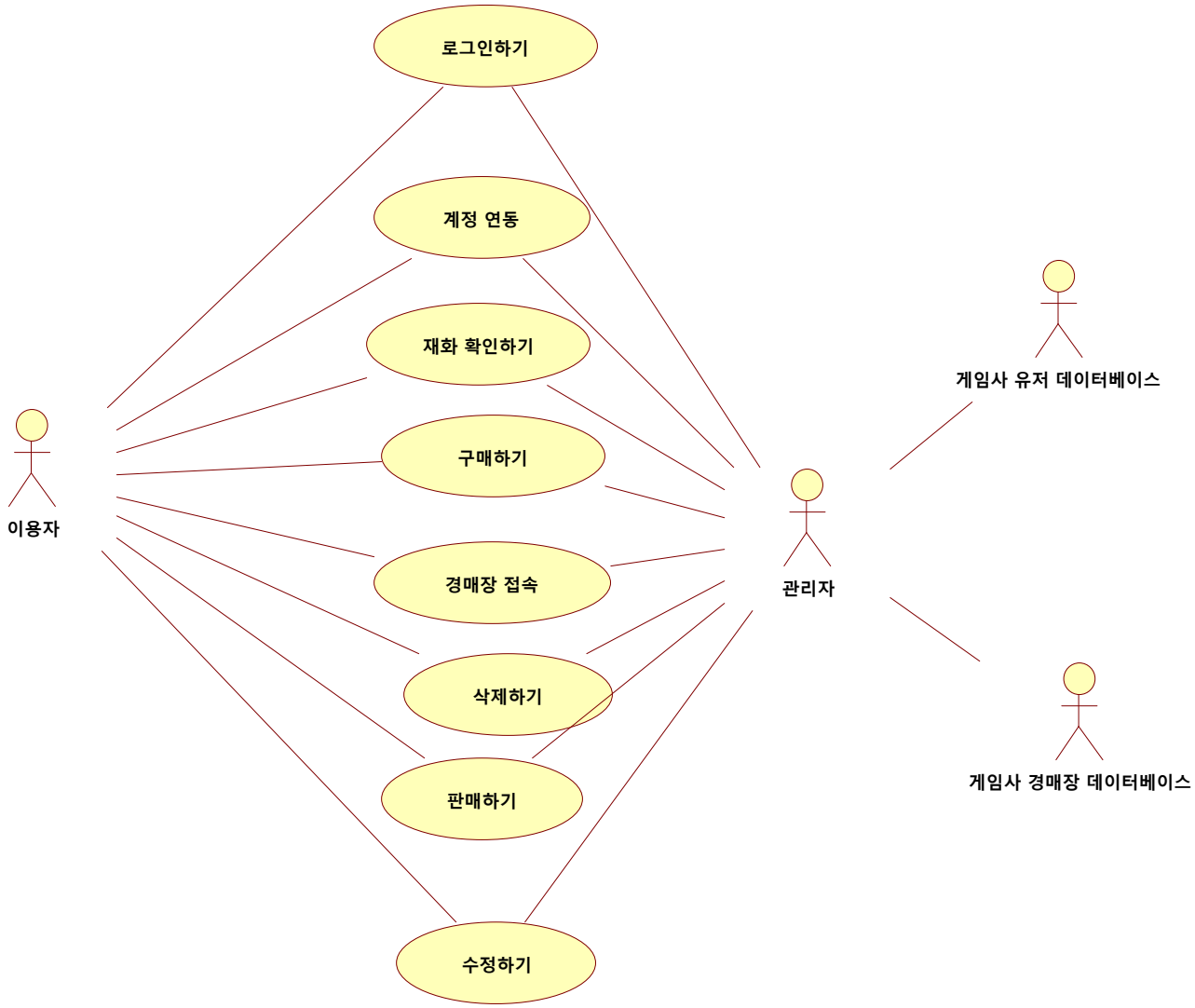
로그인하기
계정 연동
재화 확인하기
구매하기
경매장 접속
삭제하기
판매하기
수정하기
이용자
관리자
게임사 유저 데이터베이스
게임사 경매장 데이터베이스

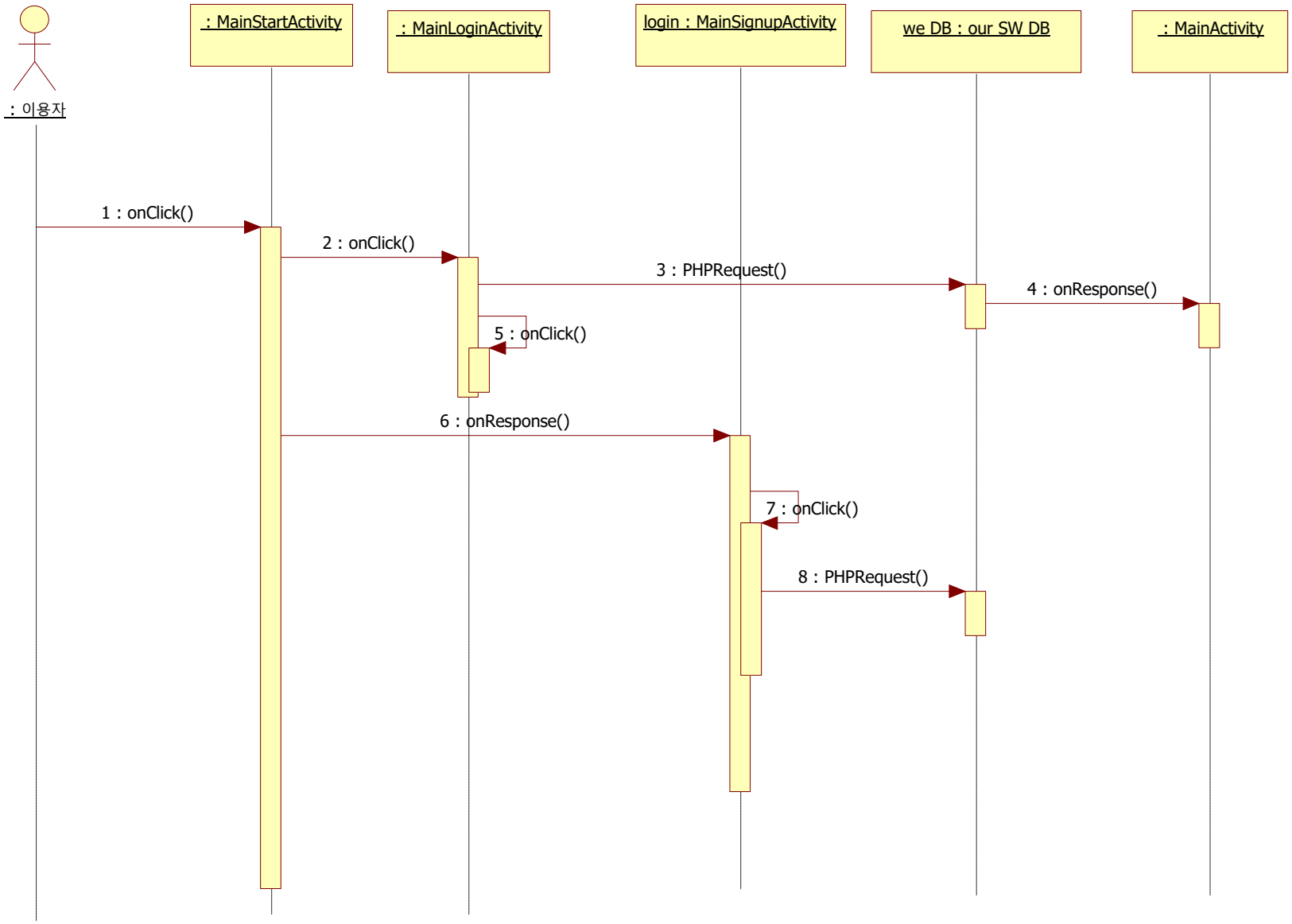
: 이용자
: MainStartActivity
: MainLoginActivity
login : MainSignupActivity
we DB : our SW DB
: MainActivity
1 : onClick()
2 : onClick()
3 : PHPRequest()
4 : onResponse()
5 : onClick()
6 : onResponse()
7 : onClick()
8 : PHPRequest()

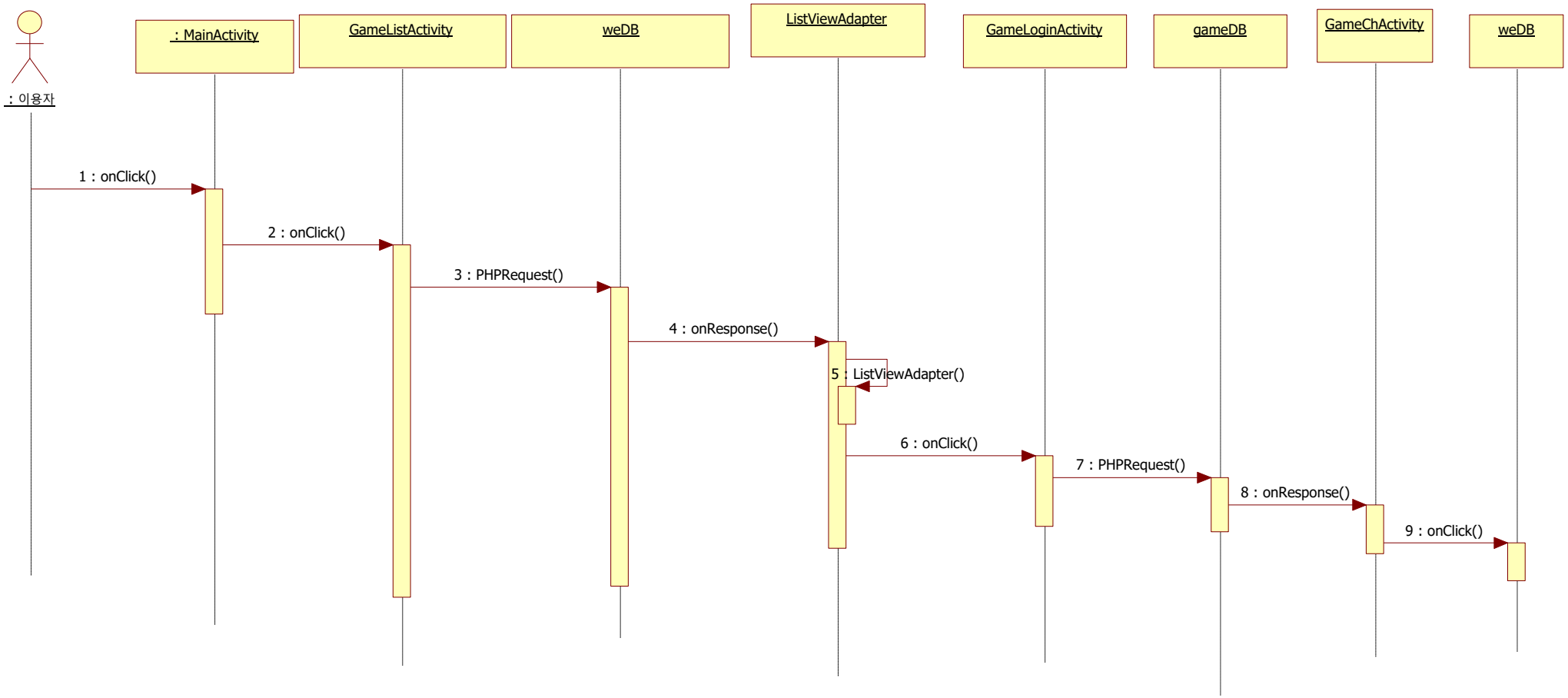
: 이용자
: MainActivity
GameListActivity
weDB
ListViewAdapter
GameLoginActivity
gameDB
GameChActivity
weDB
1 : onClick()
2 : onClick()
3 : PHPRequest()
4 : onResponse()
5 : ListViewAdapter()
6 : onClick()
7 : PHPRequest()
8 : onResponse()
9 : onClick()

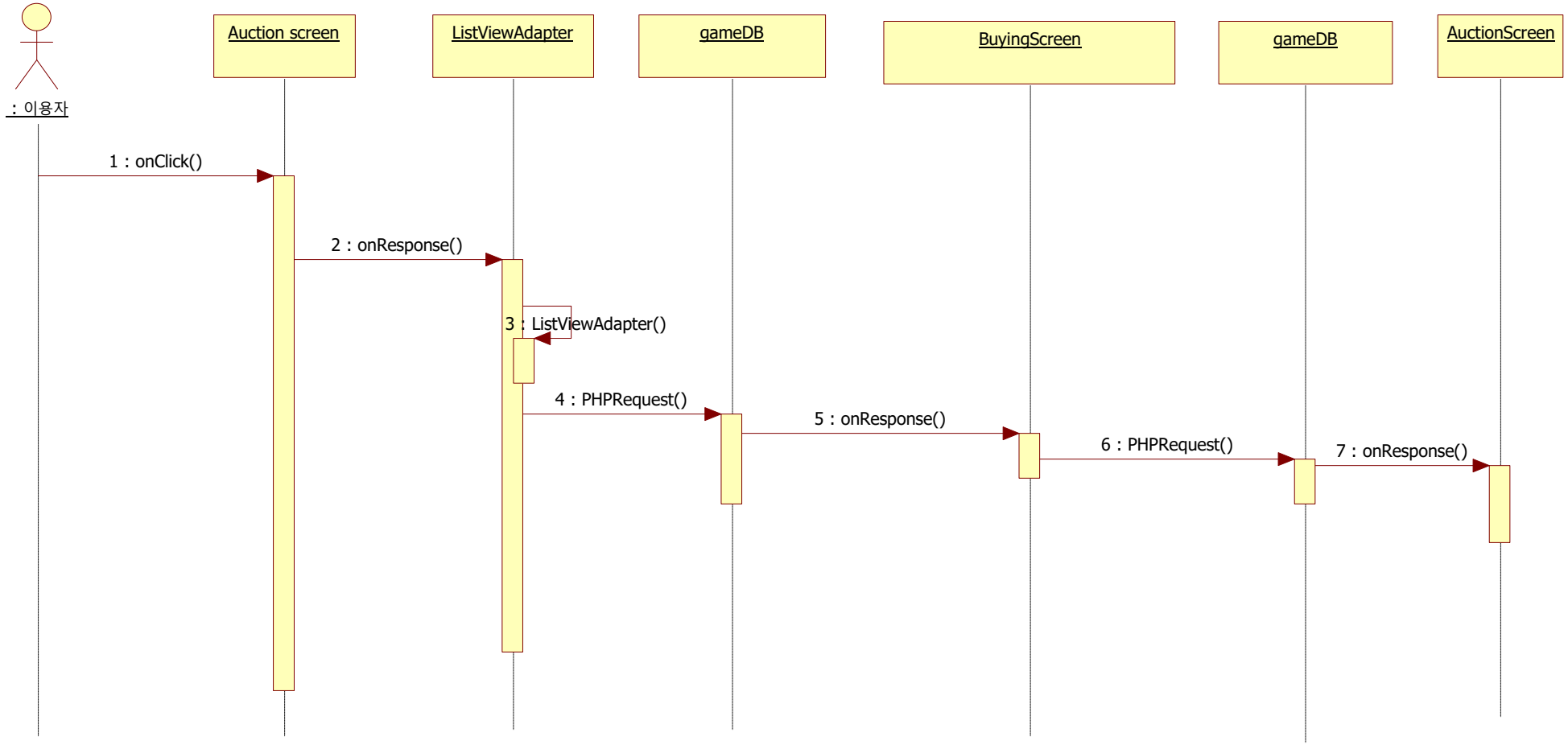
: 이용자
Auction screen
ListViewAdapter
gameDB
BuyingScreen
gameDB
AuctionScreen
1 : onClick()
2 : onResponse()
3 : ListViewAdapter()
4 : PHPRequest()
5 : onResponse()
6 : PHPRequest()
7 : onResponse()

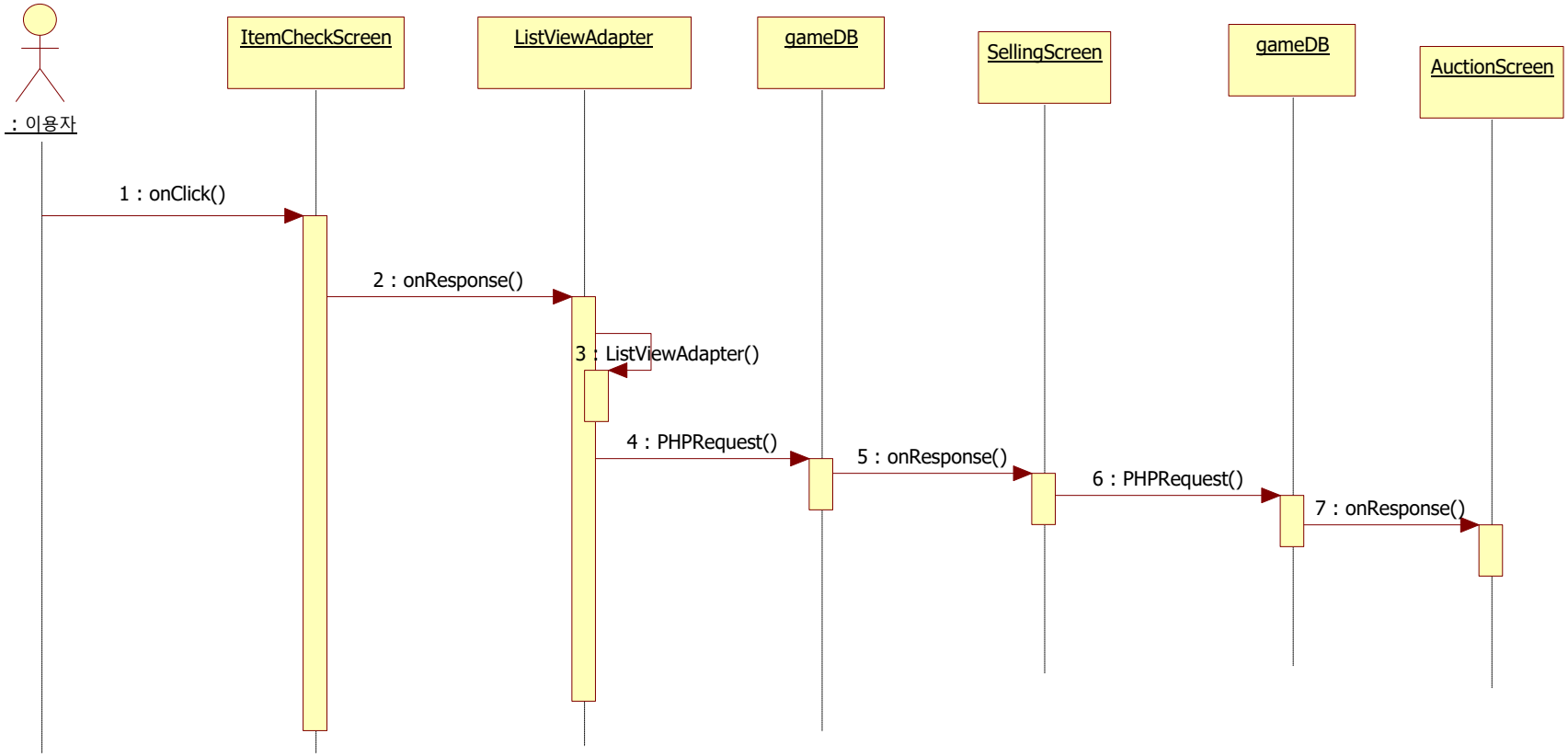
: 이용자
ItemCheckScreen
ListViewAdapter
gameDB
SellingScreen
gameDB
AuctionScreen
1 : onClick()
2 : onResponse()
3 : ListViewAdapter()
4 : PHPRequest()
5 : onResponse()
6 : PHPRequest()
7 : onResponse()

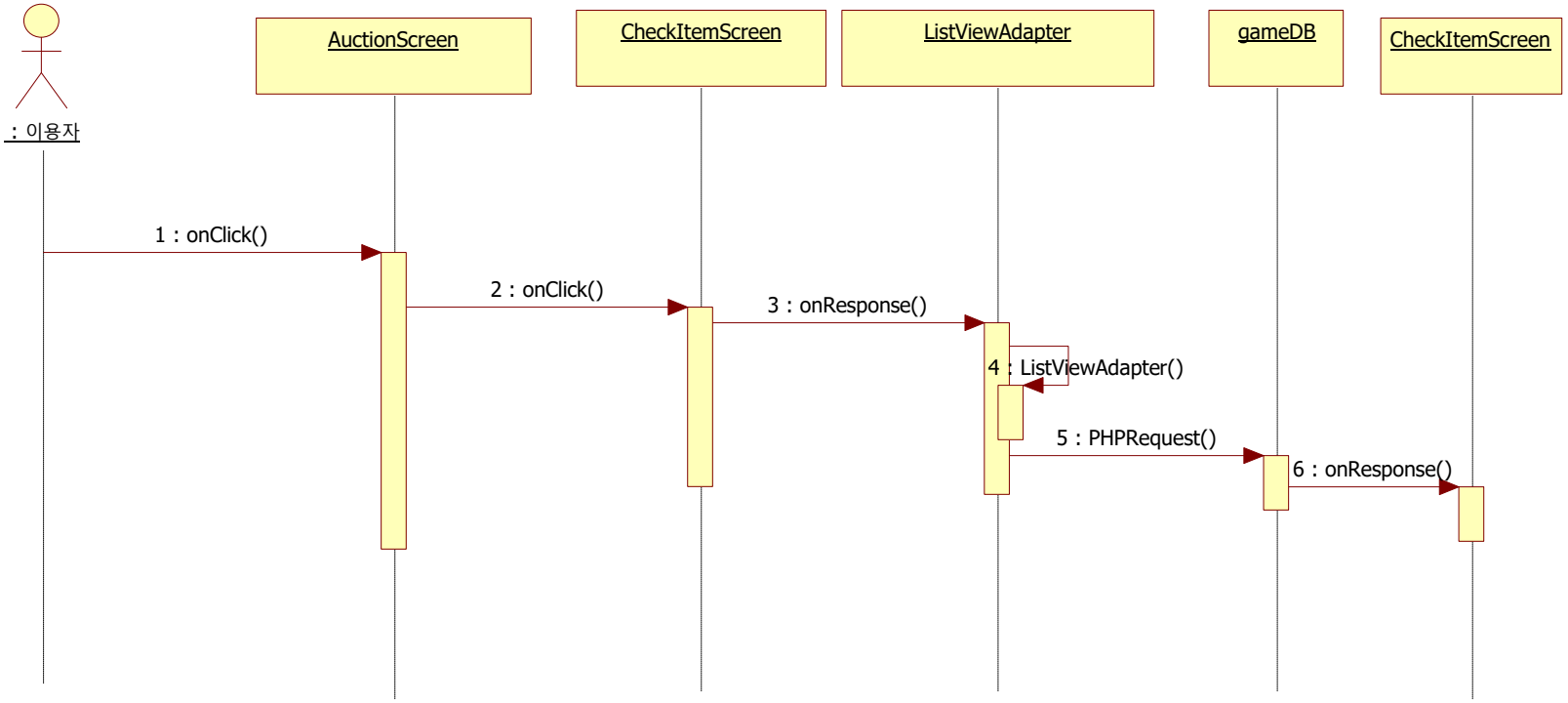
: 이용자
AuctionScreen
CheckItemScreen
ListViewAdapter
gameDB
CheckItemScreen
1 : onClick()
2 : onClick()
3 : onResponse()
4 : ListViewAdapter()
5 : PHPRequest()
6 : onResponse()

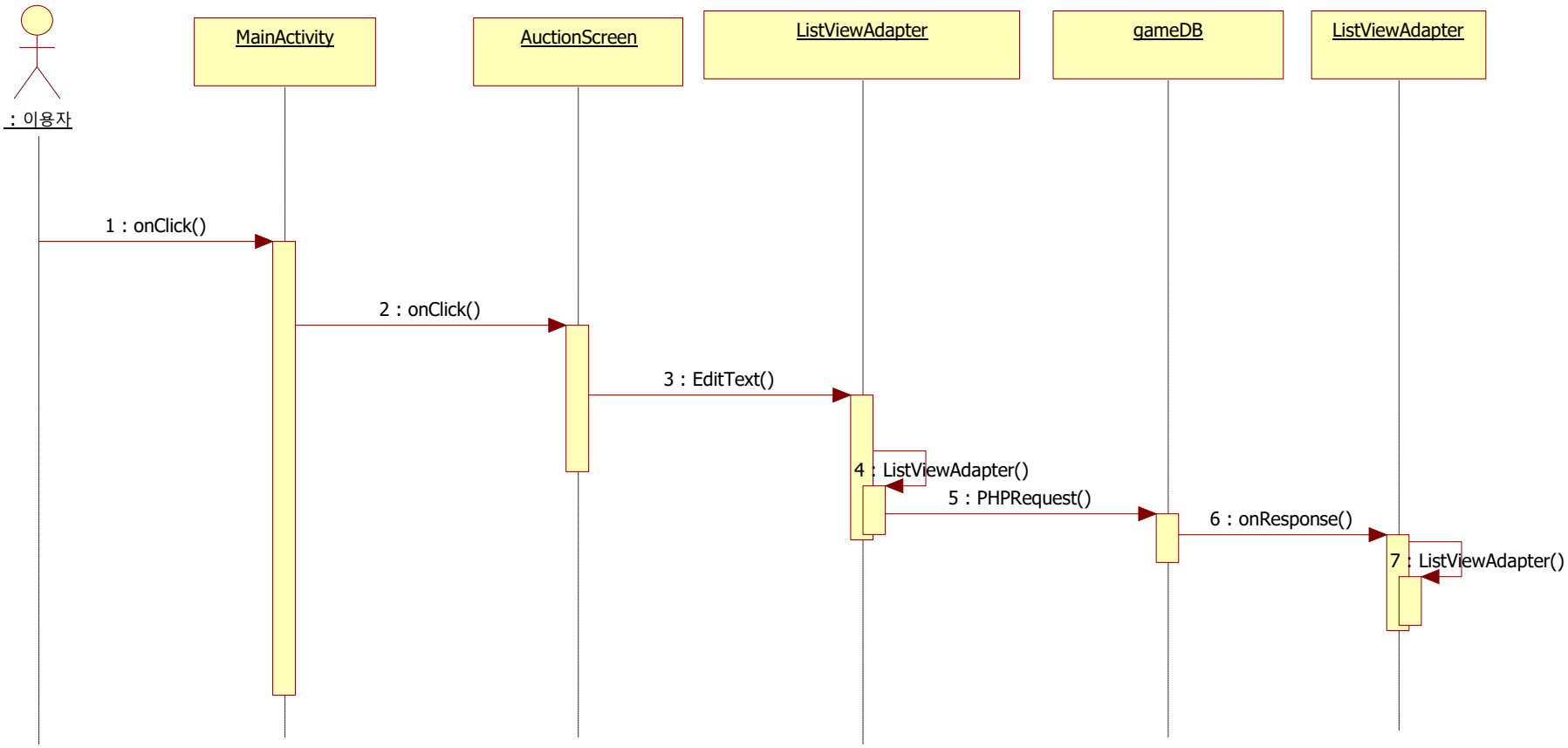
: 이용자
MainActivity
AuctionScreen
ListViewAdapter
gameDB
ListViewAdapter
1 : onClick()
2 : onClick()
3 : EditText()
4 : ListViewAdapter()
5 : PHPRequest()
6 : onResponse()
7 : ListViewAdapter()

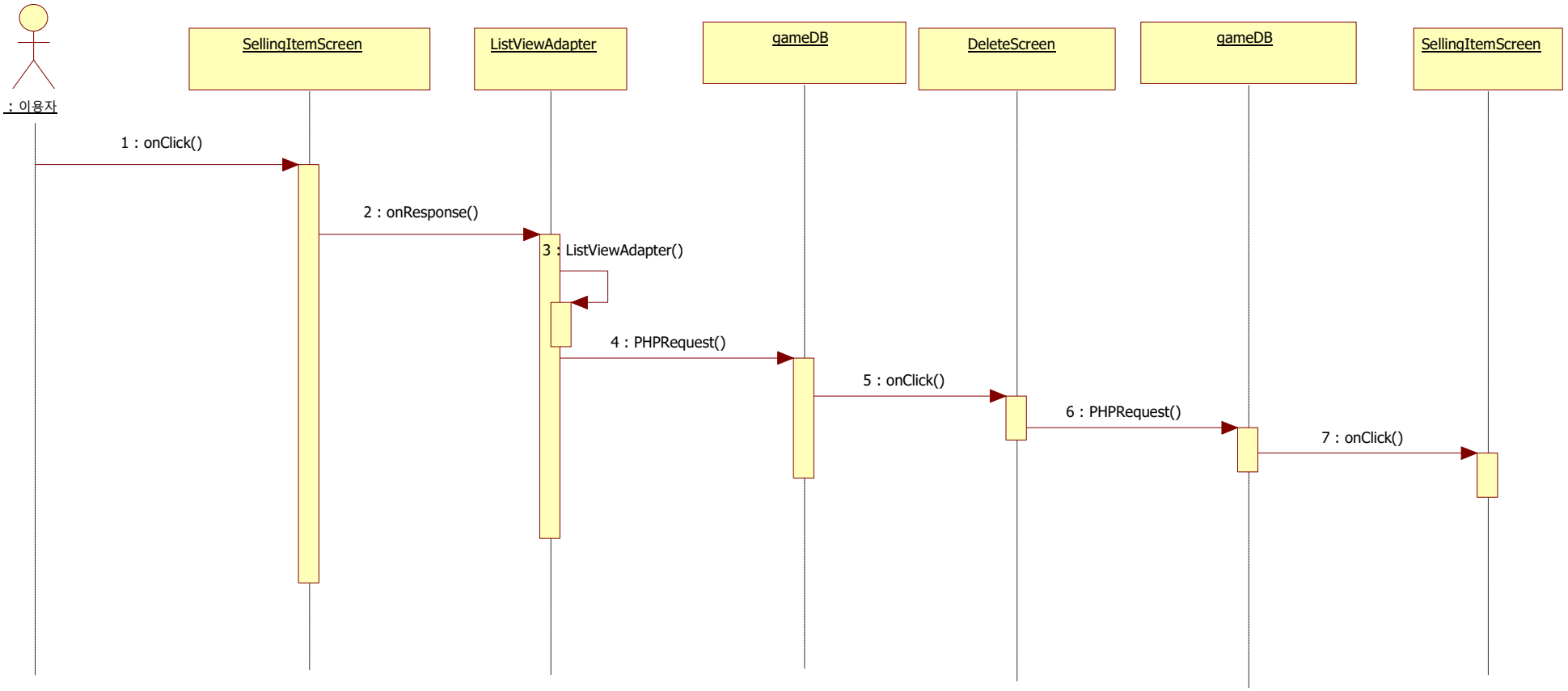
: 이용자
SellingItemScreen
ListViewAdapter
gameDB
DeleteScreen
gameDB
SellingItemScreen
1 : onClick()
2 : onResponse()
3 : ListViewAdapter()
4 : PHPRequest()
5 : onClick()
6 : PHPRequest()
7 : onClick()

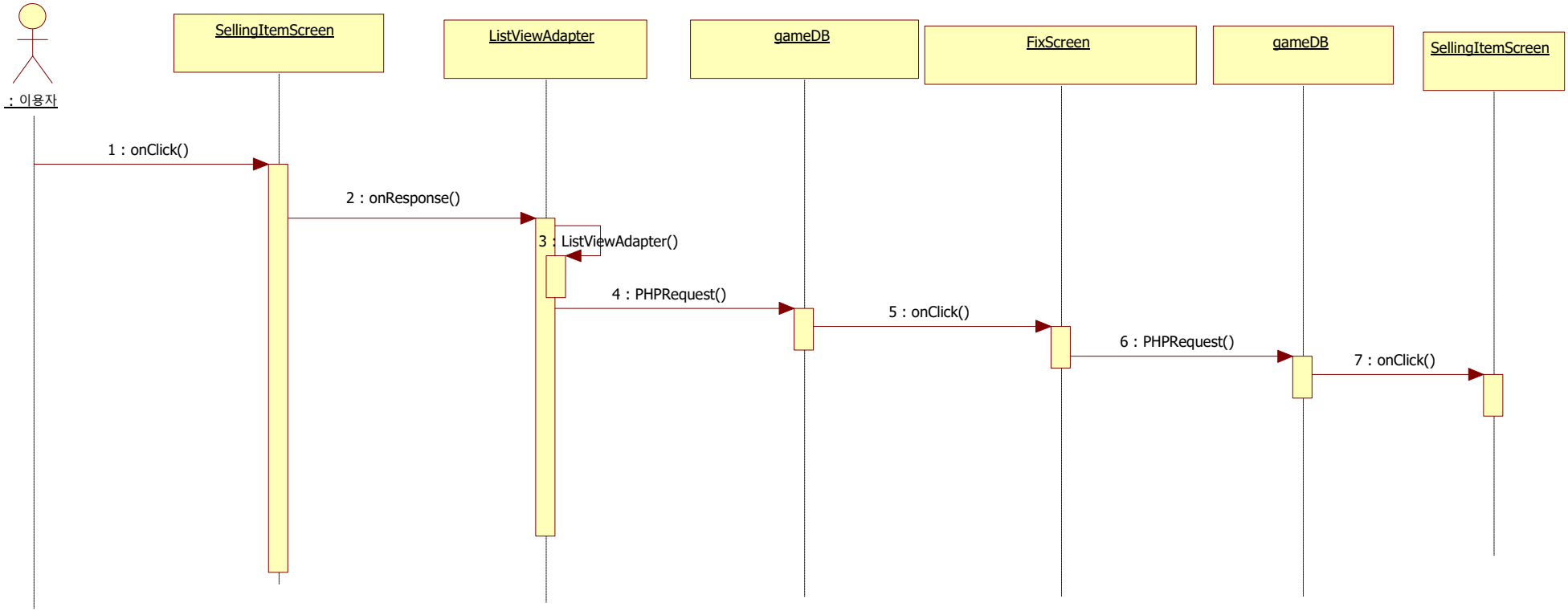
: 이용자
SellingItemScreen
ListViewAdapter
gameDB
FixScreen
gameDB
SellingItemScreen
1 : onClick()
2 : onResponse()
3 : ListViewAdapter()
4 : PHPRequest()
5 : onClick()
6 : PHPRequest()
7 : onClick()

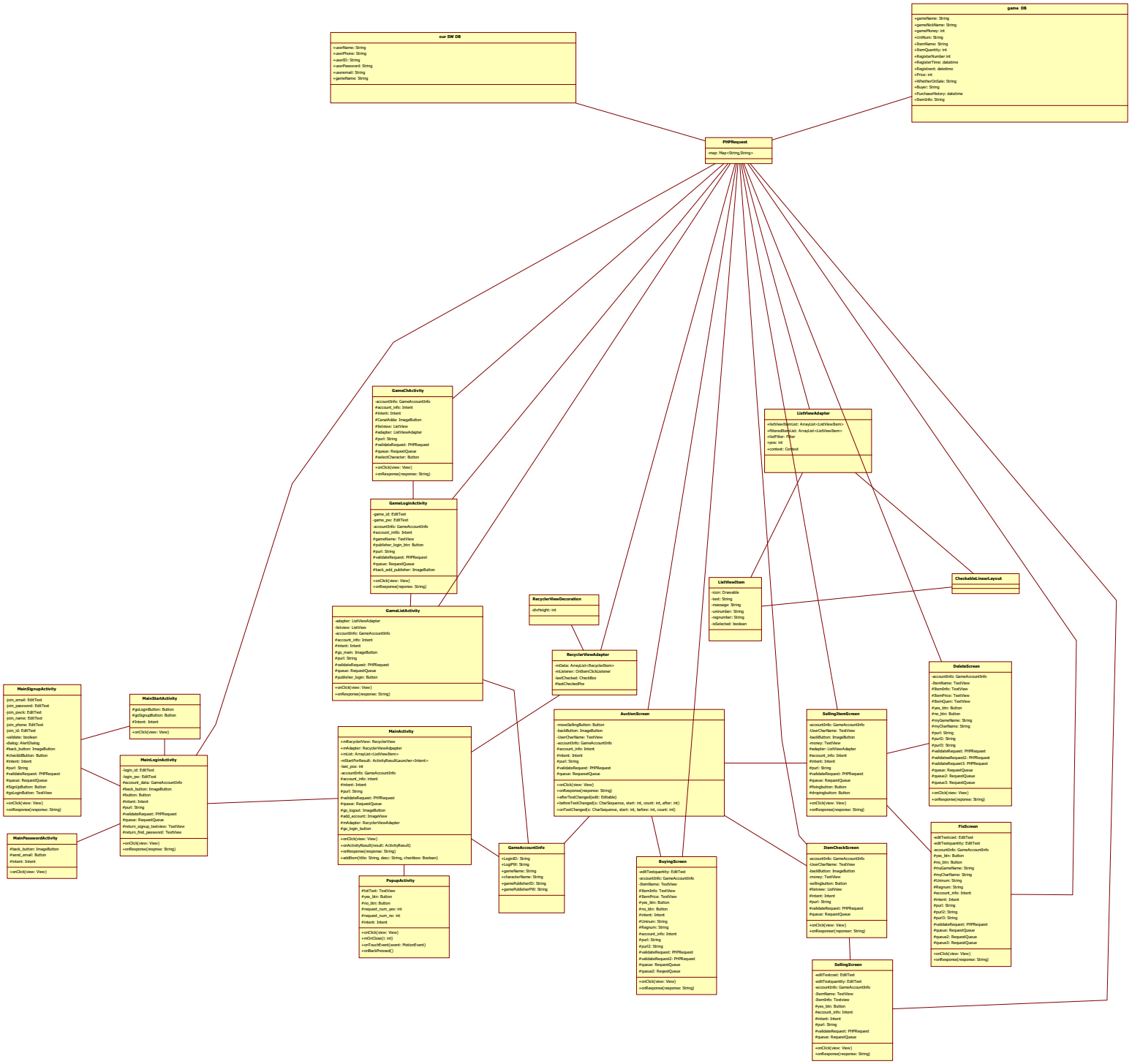
our SW DB
+userName: String
+usersPhone: String
+userID: String
+userPassword: String
+useremail: String
+gameName: String
game DB
+gameName: String
+gameNickName: String
+gameMoney: int
+UniNum: String
+ItemName: String
+ItemQuantity: int
+RegisterNumber: int
+RegisterTime: datetime
+Registrant: datetime
+Price: int
+WhetherOnSale: String
+Buyer: String
+PurchasePattory: datetime
+ItemInfo: String
PHPRequest
-map: Map<String,String>
GameChActivity
-accountInfo: GameAccountInfo
#account_info: Intent
#intent: Intent
#CameAddic: ImageButton
#listview: ListView
#adapter: ListViewAdapter
#url: String
#validateRequest: PHPRequest
#queue: RequestQueue
#selectCharacter: Button
+onClick(view: View)
+onResponse(response: String)
ListViewAdapter
+listViewItemList: Array<List<ListViewItem>
+filteredItemList: Array<List<ListViewItem>
+listFilter: Filter
+pos: int
+context: Context
GameLoginActivity
-game_id: EditText
-game_pw: EditText
-accountInfo: GameAccountInfo
#account_info: Intent
#gameName: TextView
#publisher_login_btn: Button
#url: String
#validateRequest: PHPRequest
#queue: RequestQueue
#back_add_publisher: ImageButton
+onClick(view: View)
+onResponse(response: String)
ListViewItem
-icon: Drawable
-text: String
-message: String
-onnumber: String
-regnumber: String
-isSelected: boolean
CheckableLinearLayout
RecyclerViewDecoration
+dvHeight: int
GameListActivity
-adapter: ListViewAdapter
-listview: ListView
-accountInfo: GameAccountInfo
#account_info: Intent
#intent: Intent
#go_main: ImageButton
#url: String
#validateRequest: PHPRequest
#queue: RequestQueue
#publisher_login: Button
+onClick(view: View)
+onResponse(response: String)
RecyclerViewAdapter
-mData: ArrayList<RecyclerItem>
-mListener: OnItemClickListener
-lastChecked: CheckBox
#lastCheckedPos
MainSignupActivity
-join_email: EditText
-join_password: EditText
-join_pwck: EditText
-join_name: EditText
-join_phone: EditText
-join_id: EditText
-validate: boolean
-dialog: AlertDialog
#back_button: ImageButton
#checkIdBtn: Button
#intent: Intent
#url: String
#validateRequest: PHPRequest
#queue: RequestQueue
#SignUpButton: Button
#goLoginBtn: TextView
+onClick(view: View)
+onResponse(response: String)
MainStartActivity
#goLoginBtn: Button
#goSignupBtn: Button
#intent: Intent
+onClick(view: View)
MainLoginActivity
-login_id: EditText
-login_pw: EditText
#account_data: GameAccountInfo
#back_button: ImageButton
#button: Button
#intent: Intent
#url: String
#validateRequest: PHPRequest
#queue: RequestQueue
#return_signup_textview: TextView
#return_find_password: TextView
+onClick(view: View)
+onResponse(response: String)
MainPasswordActivity
#back_button: ImageButton
#send_email: Button
#intent: Intent
+onClick(view: View)
MainActivity
+mRecyclerView: RecyclerView
+mAdapter: RecyclerViewAdapter
+mList: ArrayList<ListViewItem>
-mStartForResult: ActivityResultLauncher<Intent>
-last_pos: int
-accountInfo: GameAccountInfo
#account_info: Intent
#intent: Intent
#url: String
#validateRequest: PHPRequest
#queue: RequestQueue
#go_logout: ImageButton
#add_account: ImageView
#mAdapter: RecyclerViewAdapter
#go_login_button
+onClick(view: View)
+onActivityResult(result: ActivityResult)
+onResponse(response: String)
+addItem(title: String, desc: String, checkbox: Boolean)
PopupActivity
#txtText: TextView
#yes_btn: Button
#no_btn: Button
#request_num_yes: int
#request_num_no: int
#intent: Intent
+onClick(view: View)
+onClose(i: int)
+onTouchEvent(event: MotionEvent)
+onBackPressed()
AuctionScreen
-moveSellingButton: Button
-backButton: ImageButton
-UserCharName: TextView
-accountInfo: GameAccountInfo
#account_info: Intent
#intent: Intent
#url: String
#validateRequest: PHPRequest
#queue: RequestQueue
+onClick(view: View)
+onResponse(response: String)
+afterTextChanged(edit: Editable)
+beforeTextChanged(s: CharSequence, start: int, count: int, after: int)
+onTextChanged(s: CharSequence, start: int, before: int, count: int)
SellingItemScreen
-accountInfo: GameAccountInfo
-UserCharName: TextView
-backButton: ImageButton
-money: TextView
#adapter: ListViewAdapter
#account_info: Intent
#intent: Intent
#url: String
#validateRequest: PHPRequest
#queue: RequestQueue
#listingbutton: Button
#dropingbutton: Button
+onClick(view: View)
+onResponse(response: String)
DeleteScreen
-accountInfo: GameAccountInfo
-ItemName: TextView
#ItemInfo: TextView
#ItemPrice: TextView
#ItemQuan: TextView
#yes_btn: Button
#no_btn: Button
#myGameName: String
#myCharName: String
#url: String
#url2: String
#url3: String
#validateRequest: PHPRequest
#validateRequest2: PHPRequest
#validateRequest3: PHPRequest
#queue: RequestQueue
#queue2: RequestQueue
#queue3: RequestQueue
+onClick(view: View)
+onResponse(reponse: String)
GameAccountInfo
+LoginID: String
+LoginPW: String
+gameName: String
+characterName: String
+gamePublisherID: String
+gamePublisherPW: String
BuyingScreen
-editTextquantity: EditText
-accountInfo: GameAccountInfo
-ItemName: TextView
#ItemInfo: TextView
#ItemPrice: TextView
#yes_btn: Button
#no_btn: Button
#intent: Intent
#UniNum: String
#Regnum: String
#account_info: Intent
#url: String
#url2: String
#validateRequest: PHPRequest
#validateRequest2: PHPRequest
#queue: RequestQueue
#queue2: RequestQueue
+onClick(view: View)
+onResponse(response: String)
ItemCheckScreen
-accountInfo: GameAccountInfo
-UserCharName: TextView
-backButton: ImageButton
-money: TextView
-sellingbutton: Button
#listview: ListView
#intent: Intent
#url: String
#validateRequest: PHPRequest
#queue: RequestQueue
+onClick(view: View)
+onResponse(response: String)
FixScreen
-editTextcost: EditText
-editTextquantity: EditText
-accountInfo: GameAccountInfo
#yes_btn: Button
#no_btn: Button
#myGameName: String
#myCharName: String
#UniNum: String
#Regnum: String
#account_info: Intent
#intent: Intent
#url: String
#url2: String
#url3: String
#validateRequest: PHPRequest
#queue: RequestQueue
#queue2: RequestQueue
#queue3: RequestQueue
+onClick(view: View)
+onResponse(response: String)
SellingScreen
-editTextcost: EditText
-editTextquantity: EditText
-accountInfo: GameAccountInfo
-ItemName: TextView
-ItemInfo: Textview
#yes_btn: Button
#account_info: Intent
#intent: Intent
#url: String
#validateRequest: PHPRequest
#queue: RequestQueue
+onClick(view: View)
+onResponse(response: String)