StripboardProto Documentation

Release 0.0.0

ponty

December 29, 2011

CONTENTS

1 About **2**

2 Stripboard design **4**

3 Atmega8 **5**
- 3.1 Pins . . . 5
- 3.2 Schematic . . . 6
- 3.3 Board . . . 7
- 3.4 Partlist . . . 8
- 3.5 3D view . . . 9

4 Backplane **13**
- 4.1 Schematic . . . 13
- 4.2 Board . . . 14
- 4.3 Partlist . . . 15
- 4.4 3D view . . . 15

5 buzzer **19**
- 5.1 Schematic . . . 19
- 5.2 Board . . . 19
- 5.3 Partlist . . . 20
- 5.4 3D view . . . 21

6 External power **25**
- 6.1 Schematic . . . 25
- 6.2 Board . . . 25
- 6.3 Partlist . . . 26
- 6.4 3D view . . . 27

7 RS232 adapter **31**
- 7.1 pins . . . 31
- 7.2 Schematic . . . 31
- 7.3 Board . . . 32
- 7.4 Partlist . . . 32
- 7.5 3D view . . . 33

8 Electronic component tester **37**
- 8.1 Schematic . . . 37
- 8.2 Board . . . 37
- 8.3 Partlist . . . 39

8.4 3D view 39

9 V-USB Adapter **43**
9.1 Schematic 43
9.2 Board 43
9.3 Partlist 44
9.4 3D view 45
9.5 original source 48

StripboardProto

Date December 29, 2011

PDF StripboardProto.pdf

CHAPTER

ONE

ABOUT

StripboardProto

Stripboard based modular hardware prototyping system.

Links:

- home: https://github.com/ponty/StripboardProto
- documentation: http://ponty.github.com/StripboardProto

Features:

- designed for hobby projects
- stripboard based
- no drilling
- no etching
- modular
- the bus consists of 8 bit ports
- passive backplane holds the modules
- Design tool: EAGLE Light Edition

Example:

```
backplane

II
II
II=C=================      microcontroller module
II
II
II=C=================      sound module
II
II
II=C=================      USB module
II
```

Bus:

```
-----------------------------------------------                -----------
| Port 1                                      |                | Port 2
-------------------------------------------------------------------------
```

```
| 0 | 1 | 2 | 3 | 4 | 5 | 6 | 7 | POWER | GND | EMPTY | EMPTY | 0 | 1 ...
-------------------------------------------------------------------------
```

other modular designs:

- http://www.instructables.com/id/AVR-mini-board-with-additional-boards/
- Arduino shield

CHAPTER

TWO

STRIPBOARD DESIGN

Stripboard design representation in eagle:

- holes: copper should be cut or drilled here
- SMD: through-hole component, legs are drawn on top layer
- top layer: wires
- lines on documentation layer: wires
- bottom layer: original parallel strips of copper, only those are drawn, which are used for connection
- via: soldering points

Some electronic components have no 3D view in the documentation.

CHAPTER

THREE

ATMEGA8

Status: OK

Arduino compatible board for Atmega8/48/88/168 and maybe others also.

features:

- reset button
- 10 pin ISP connector

3.1 Pins

board pin	AVR pin	Arduino pin	comment
0	PB0	D8	
1	PB1	D9	
2	PB2	D10	
3	PB3	D11	MOSI
4	PB4	D12	MISO
5	PB5	D13	SCK
6	NC		
7	NC		
8	POWER		
9	GND		
•			
•			
10	PC0	A0	
11	PC1	A1	
12	PC2	A2	
13	PC3	A3	
14	PC4	A4	
15	PC5	A5	
16	NC		
17	NC		
18	POWER		

Continued on next page

Table 3.1 – continued from previous page

board pin	AVR pin	Arduino pin	comment
19	GND		
•			
•			
20	PD0	D0	RxD
21	PD1	D1	TxD
22	PD2	D2	
23	PD3	D3	
24	PD4	D4	
25	PD5	D5	
26	PD6	D6	
27	PD7	D7	
28	POWER		
29	GND		

ISP pinout

3.2 Schematic

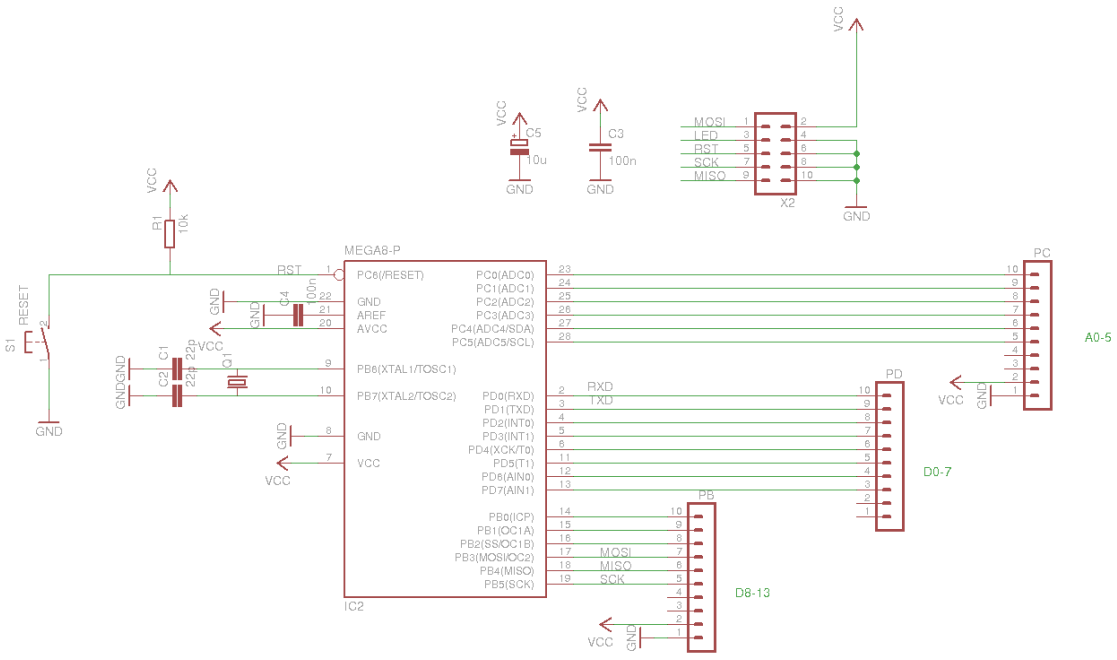

3.3 Board

Normal, bottom mirrored, wires only:

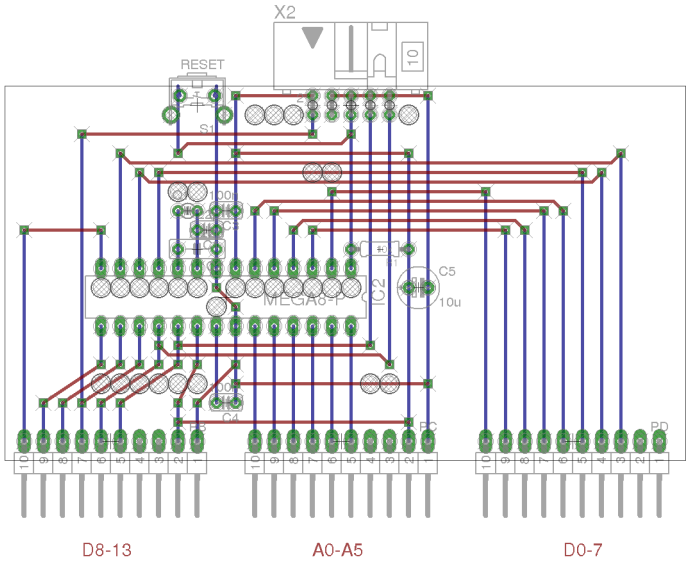

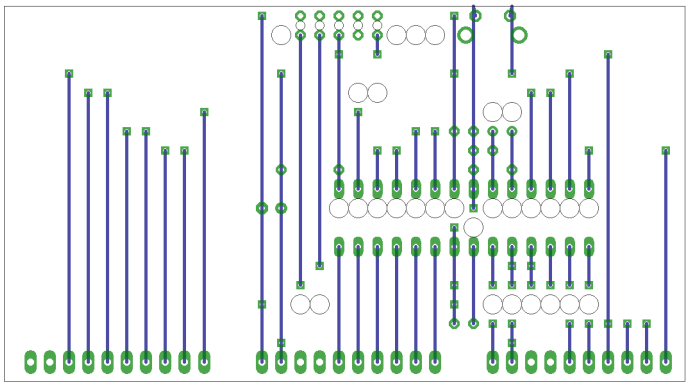

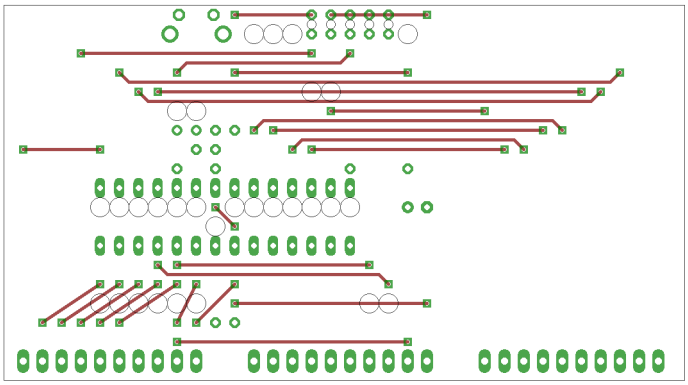

3.4 Partlist

Table 3.2:

part	value	position
C1	22p	(1.05 1.2)
C2	22p	(1 1.1)
C3	100n	(1.15 1.3)
C4	100n	(1.15 0.3)
C5	10u	(2.15 0.9)
IC2	MEGA8-P	(1.15 0.85)
PB		(0.55 0.1)
PC		(1.75 0.1)
PD		(2.95 0.1)
Q1		(0.95 1.3)
R1	10k	(1.95 1.1)
S1	RESET	(1 1.85)
X2		(1.8 1.85)

3.5 3D view

3.5.1 Front

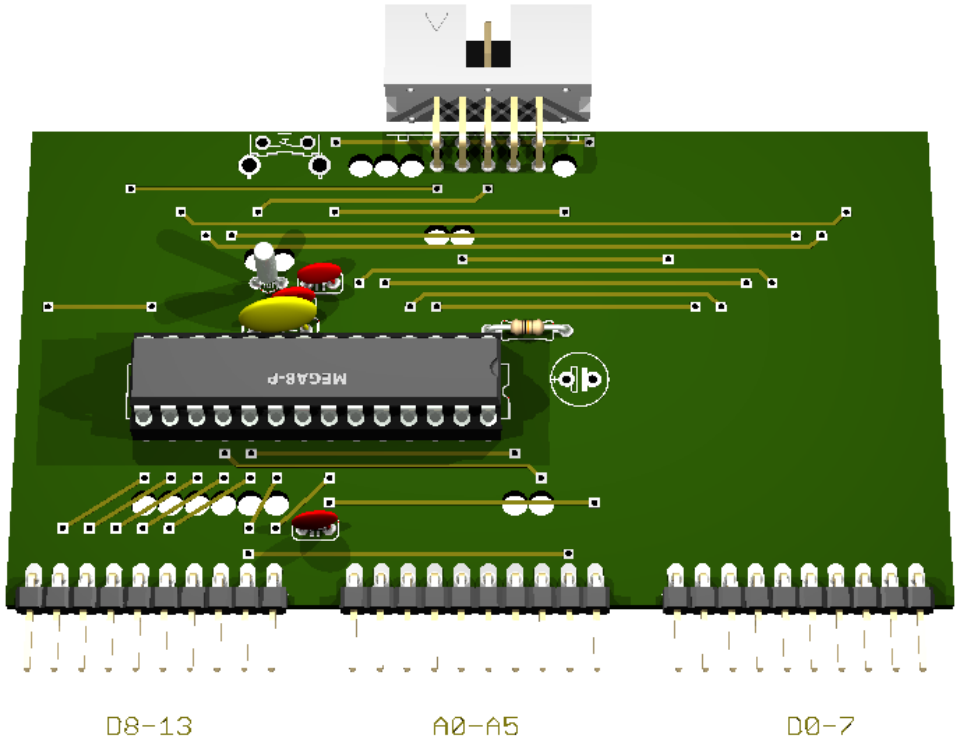

3.5.2 Right side

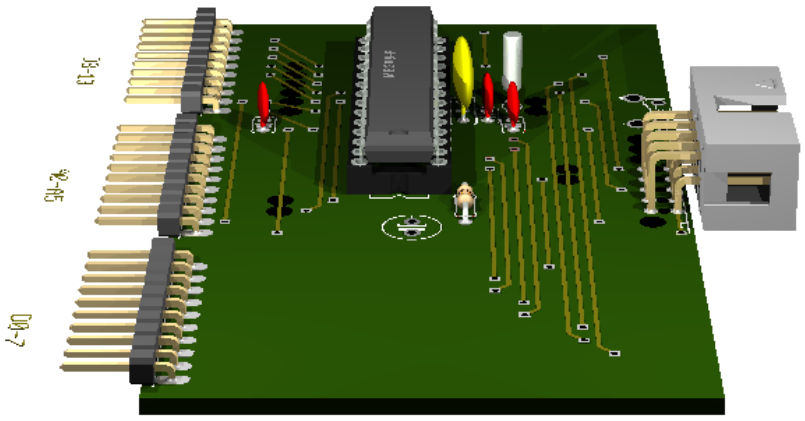

3.5.3 Left side

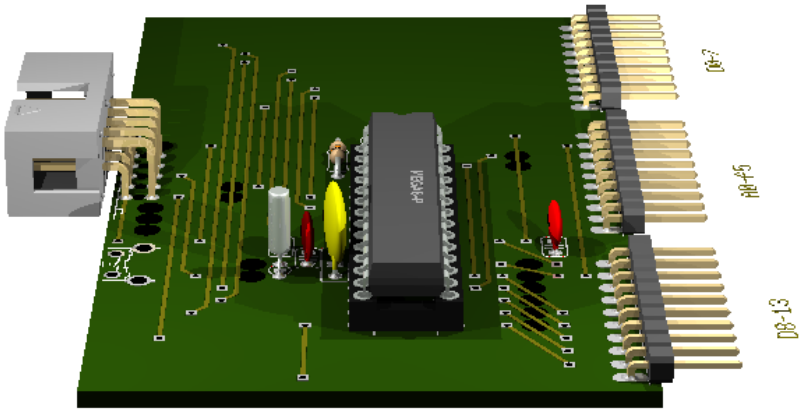

3.5.4 Bottom

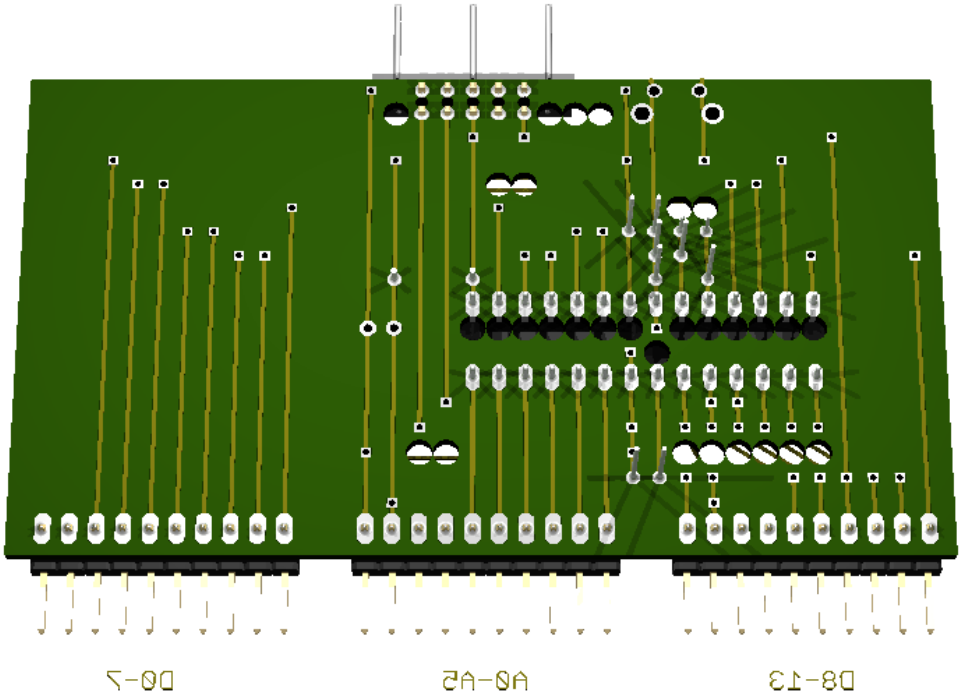

CHAPTER

FOUR

BACKPLANE

Status: OK

features:

- 3 ports

4.1 Schematic

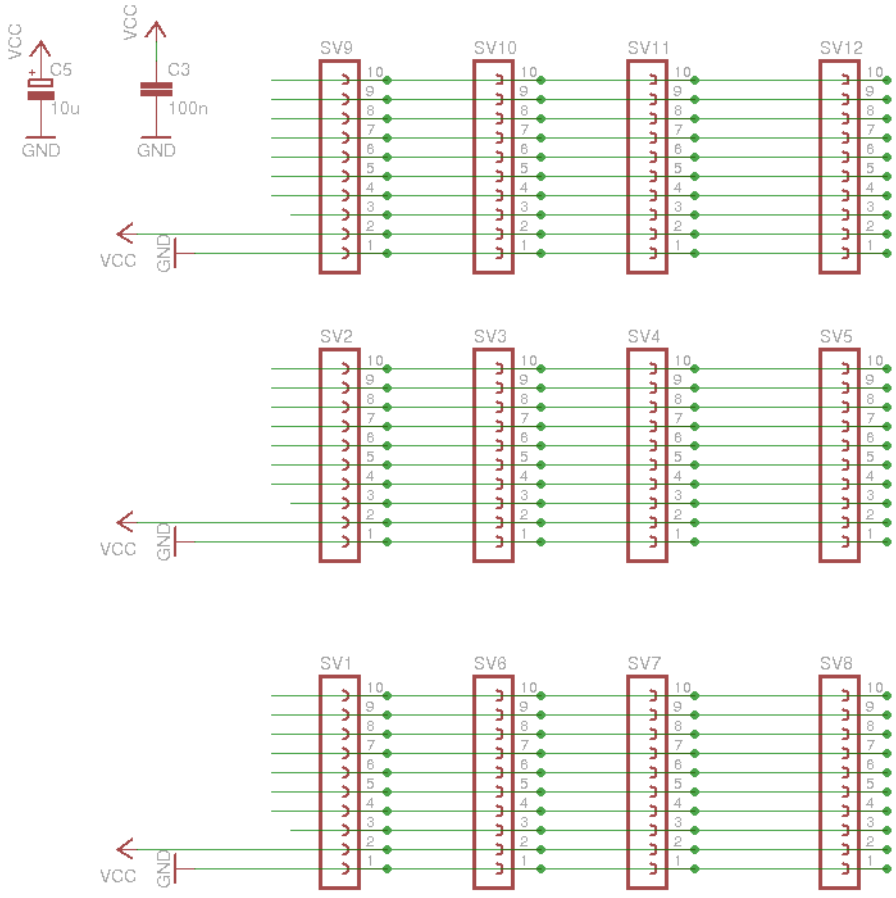

4.2 Board

Normal, bottom mirrored, wires only:

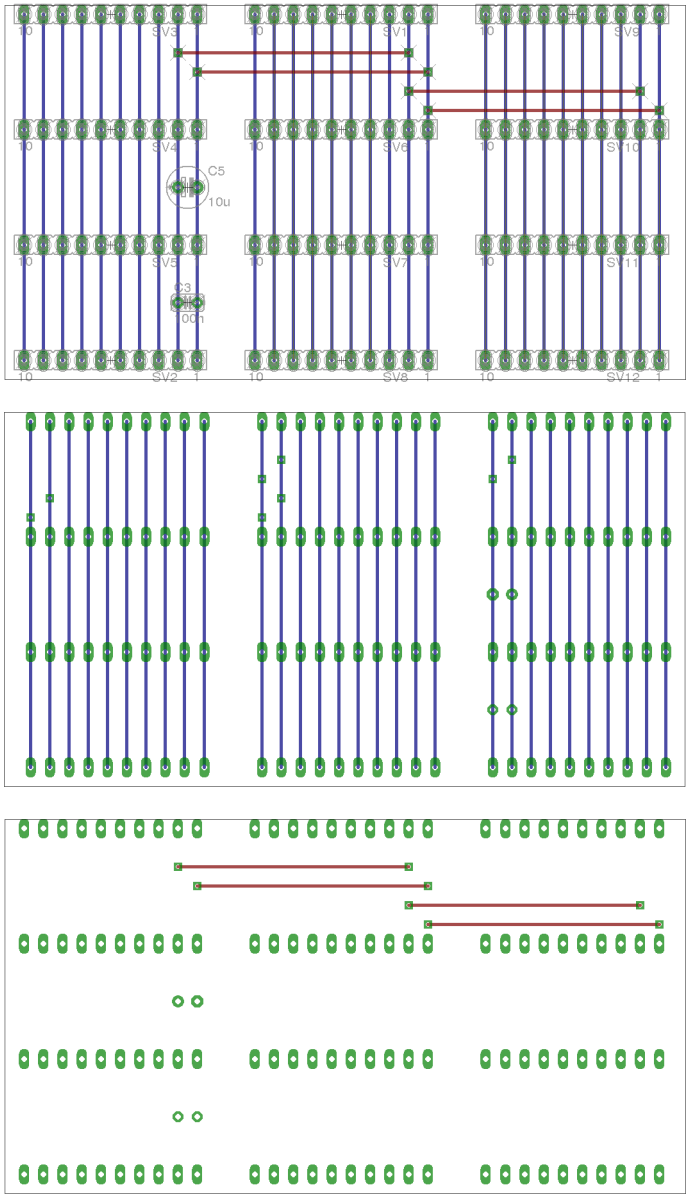

4.3 Partlist

Table 4.1:

part	value	position
C3	100n	(0.95 0.4)
C5	10u	(0.95 1)
SV1		(1.75 1.9)
SV2		(0.55 0.1)
SV3		(0.55 1.9)
SV4		(0.55 1.3)
SV5		(0.55 0.7)
SV6		(1.75 1.3)
SV7		(1.75 0.7)
SV8		(1.75 0.1)
SV9		(2.95 1.9)
SV10		(2.95 1.3)
SV11		(2.95 0.7)
SV12		(2.95 0.1)

4.4 3D view

4.4.1 Front

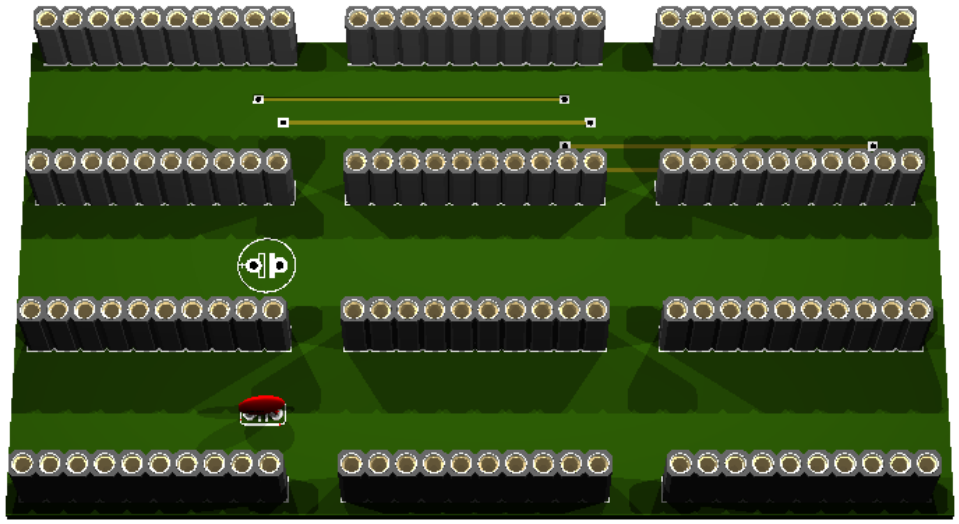

4.4.2 Right side

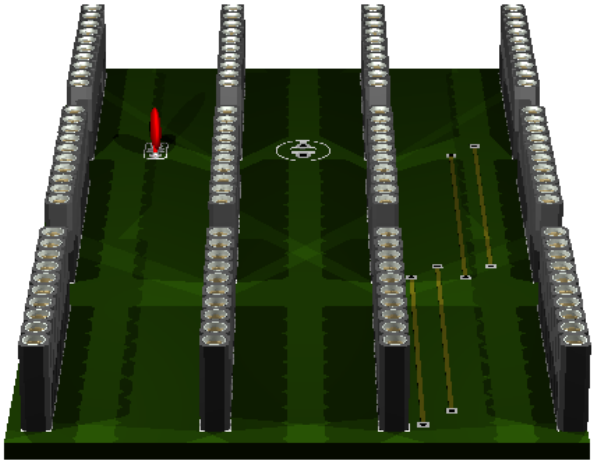

4.4.3 Left side

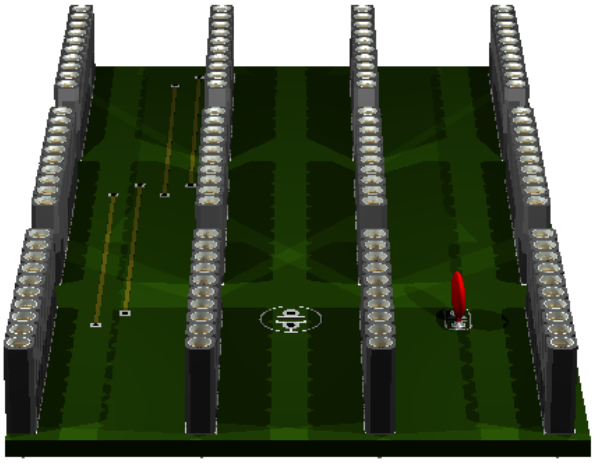

4.4.4 Bottom

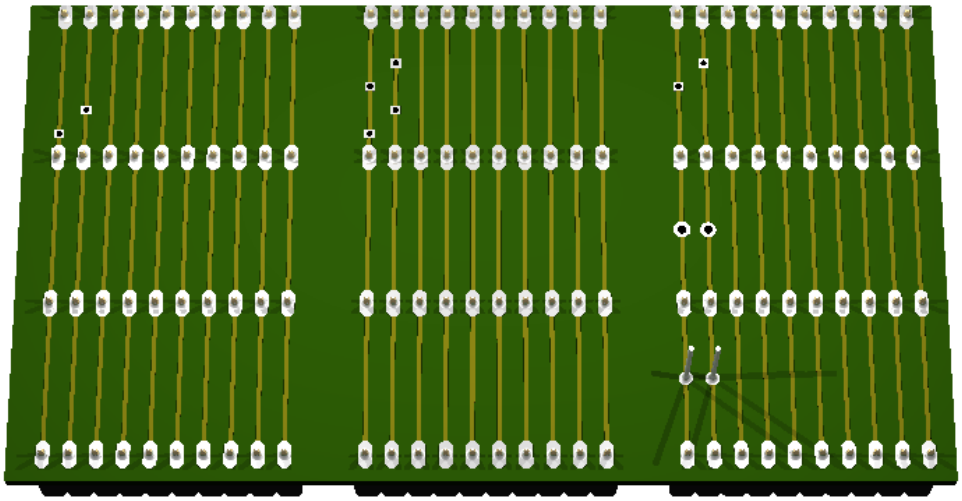

CHAPTER

FIVE

BUZZER

Status: OK

Sound module.

features:

- passive or active
- volume trimmer

5.1 Schematic

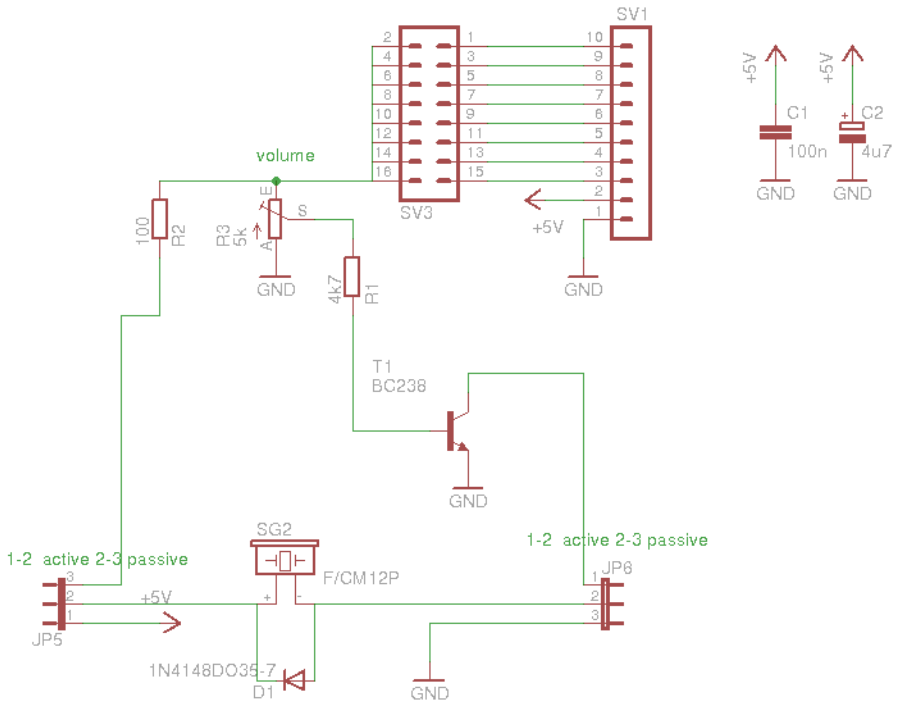

5.2 Board

Normal, bottom mirrored, wires only:

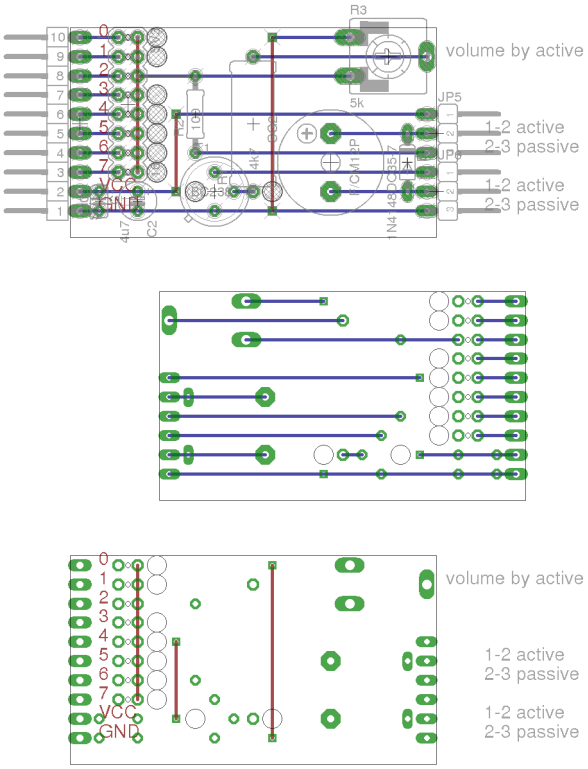

5.3 Partlist

Table 5.1:

part	value	position
C1	100n	(0.6 0.25)
C2	4u7	(0.8 0.25)
D1	1N4148DO35-7	(2.2 0.45)
JP5		(2.35 0.6)
JP6		(2.35 0.3)
R1	4k7	(1.4 0.65)
R2	100	(1.1 0.7)
R3	5k	(2.1 1)
SG2	F/CM12P	(1.8 0.45)
SV1		(0.5 0.65)
SV3		(0.75 0.75)
T1	BC238	(1.2 0.3)

5.4 3D view

5.4.1 Front

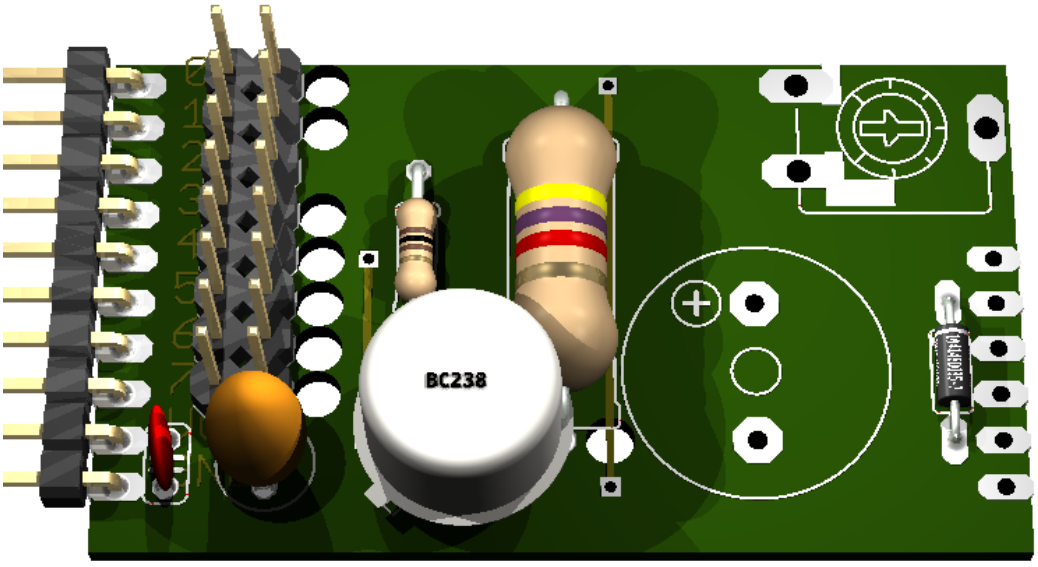

5.4.2 Right side

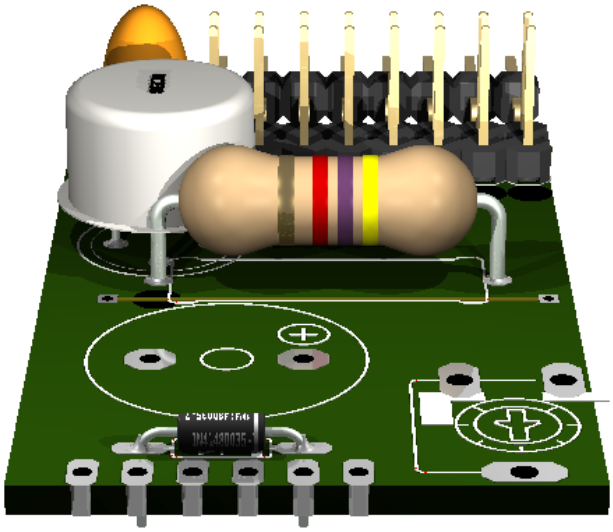

5.4.3 Left side

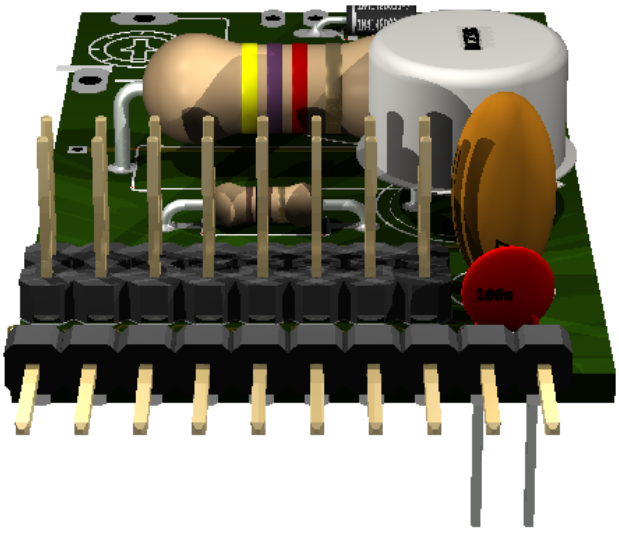

5.4.4 Bottom

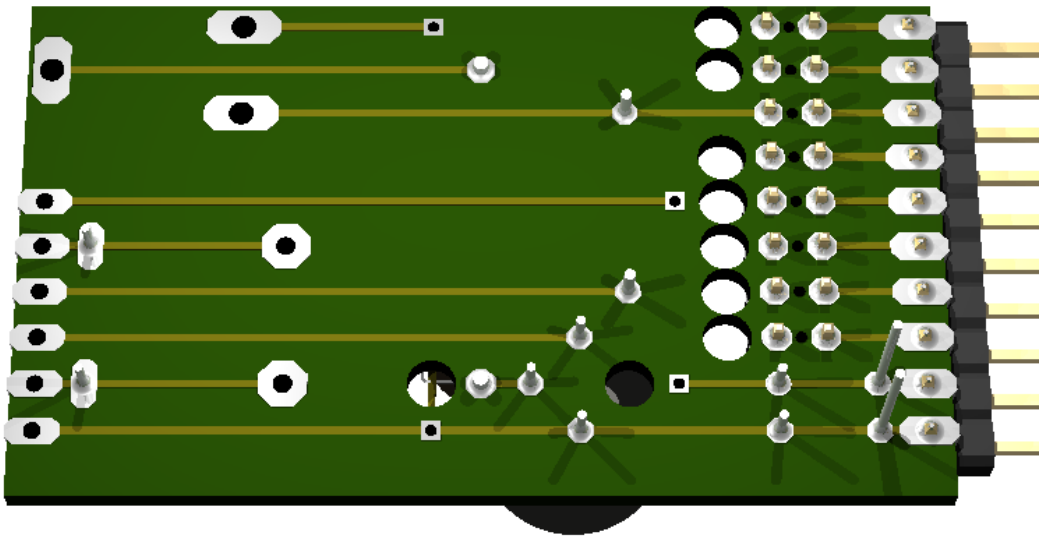

CHAPTER

SIX

EXTERNAL POWER

Status: under construction

6.1 Schematic

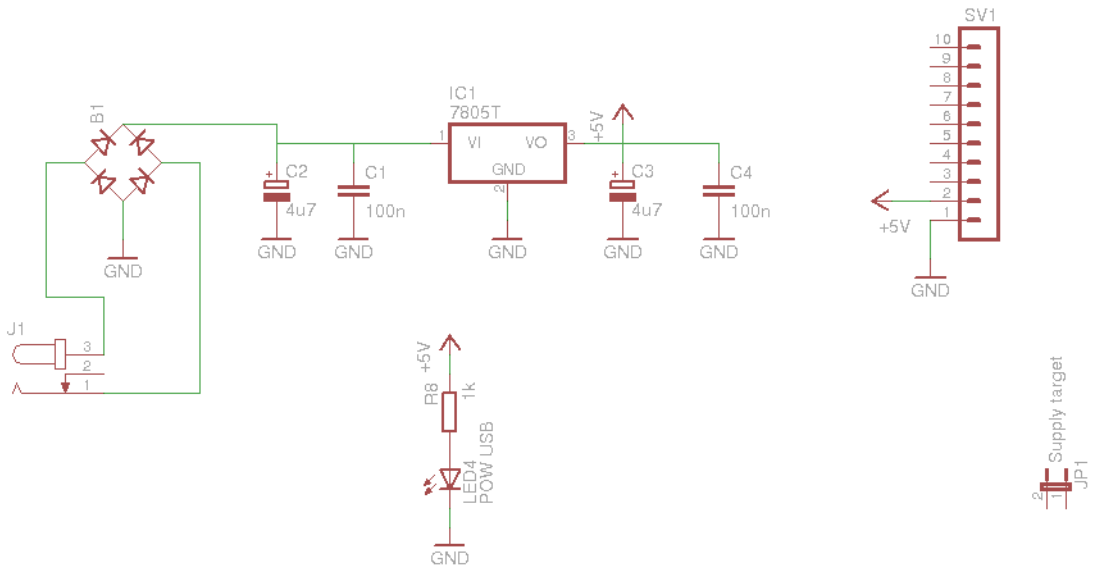

6.2 Board

Normal, bottom mirrored, wires only:

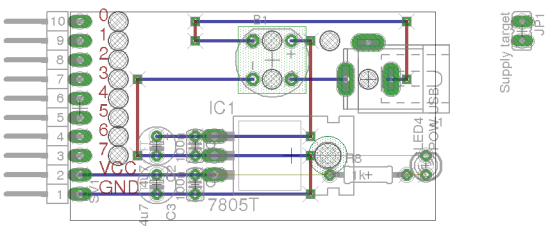

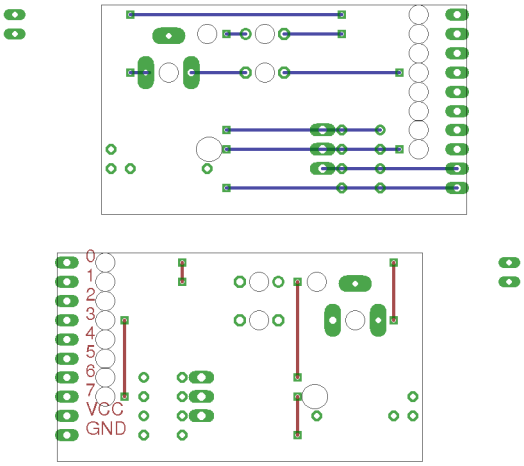

6.3 Partlist

Table 6.1:

part	value	position
B1		(1.5 0.9)
C1	100n	(1.1 0.45)
C2	4u7	(0.9 0.45)
C3	4u7	(0.9 0.25)
C4	100n	(1.1 0.25)
IC1	7805T	(1.6 0.4)
J1		(2 0.8)
JP1	Supply target	(2.8 1.05)
LED4	POW USB	(2.3 0.35)
R8	1k	(2 0.3)
SV1		(0.5 0.65)

6.4 3D view

6.4.1 Front

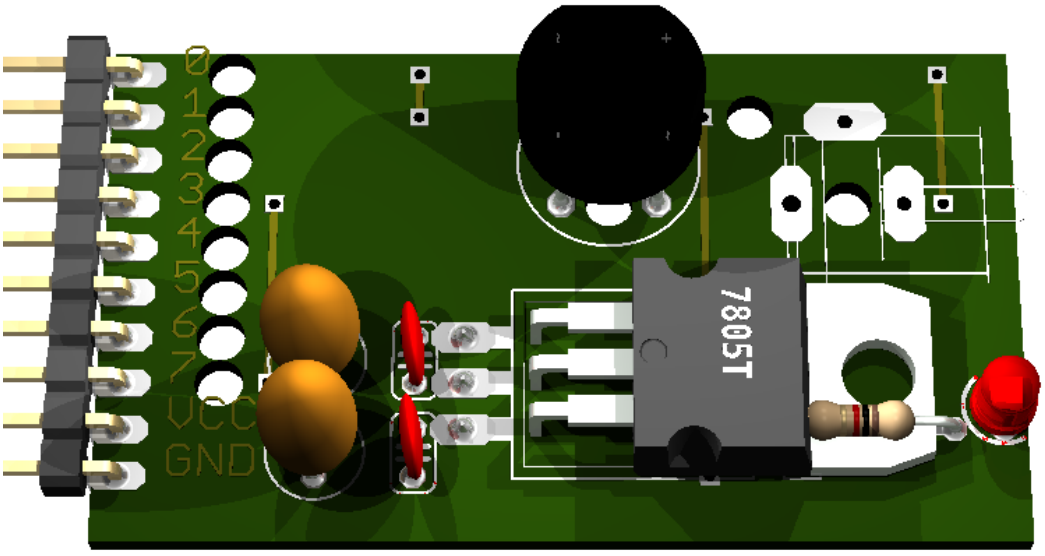

6.4.2 Right side

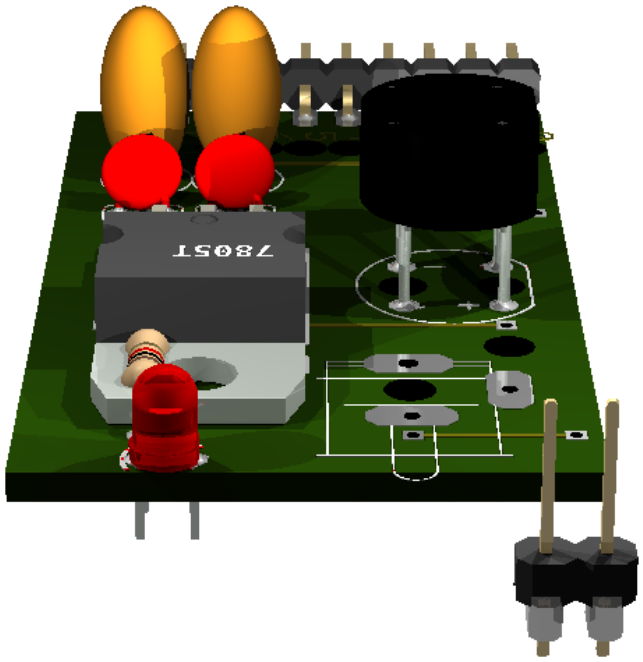

6.4.3 Left side

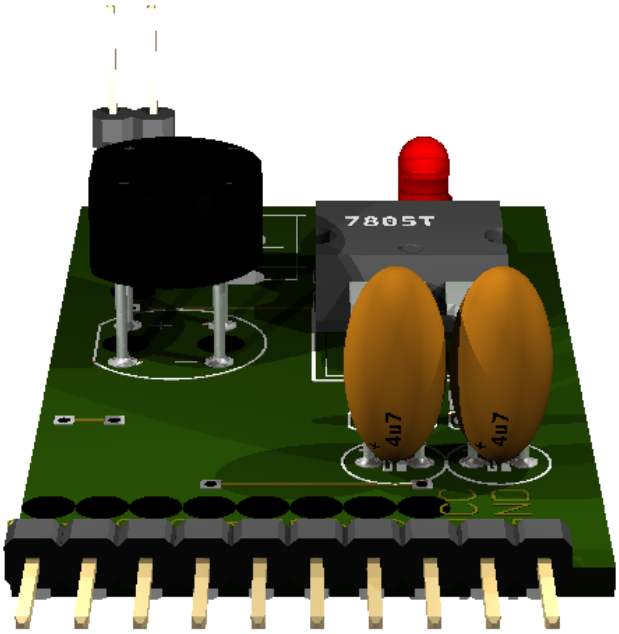

6.4.4 Bottom

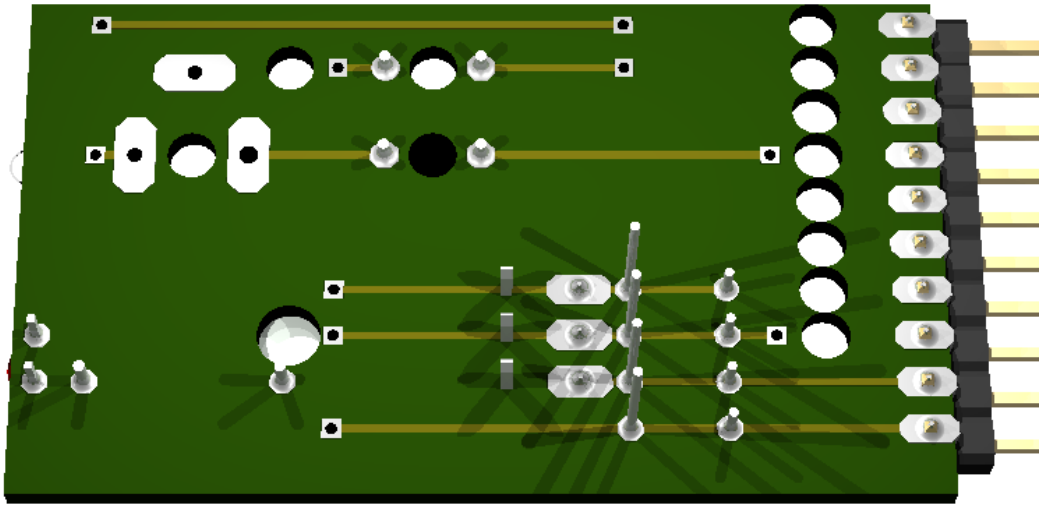

CHAPTER

SEVEN

RS232 ADAPTER

Status: OK

features:

- Jumper pins can be used for default Arduino ports.
- FTDI pinout for RS232 connector

7.1 pins

FTDI pin	signal
1	gnd
2	cts
3	5v
4	rxd
5	txd
6	rts

7.2 Schematic

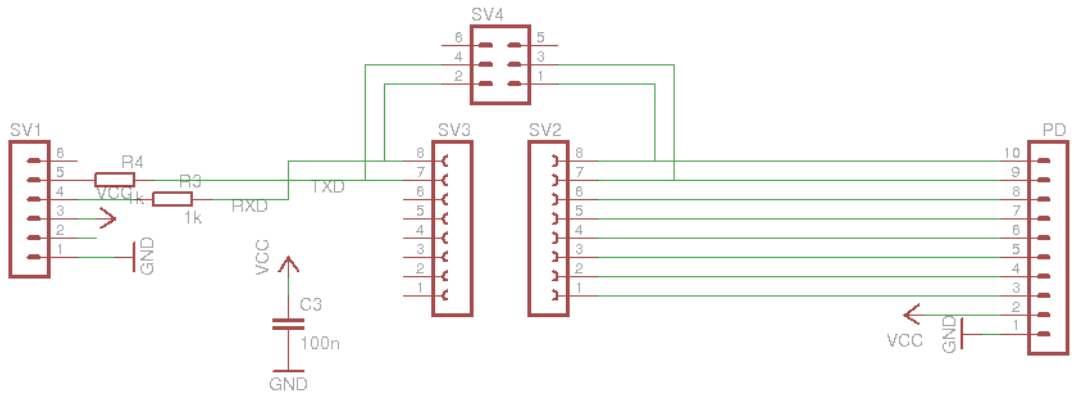

7.3 Board

Normal, bottom mirrored, wires only:

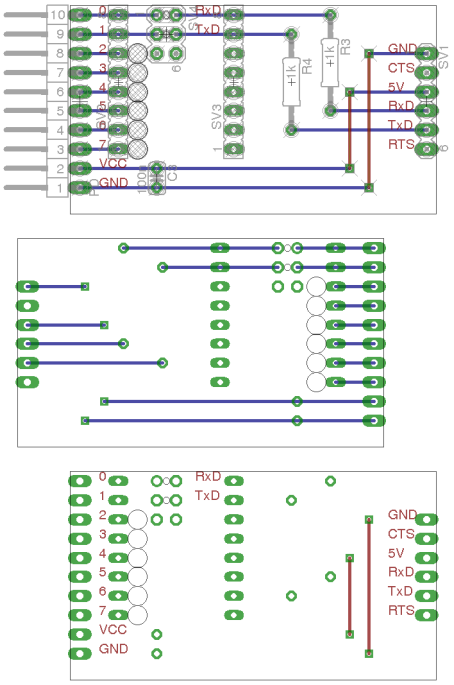

7.4 Partlist

Table 7.1:

part	value	position
C3	100n	(1.1 0.35)
PD		(0.7 0.75)
R3	1k	(2 0.95)
R4	1k	(1.8 0.85)
SV1		(2.5 0.75)
SV2		(0.9 0.85)
SV3		(1.5 0.85)
SV4		(1.15 1.1)

7.5 3D view

7.5.1 Front

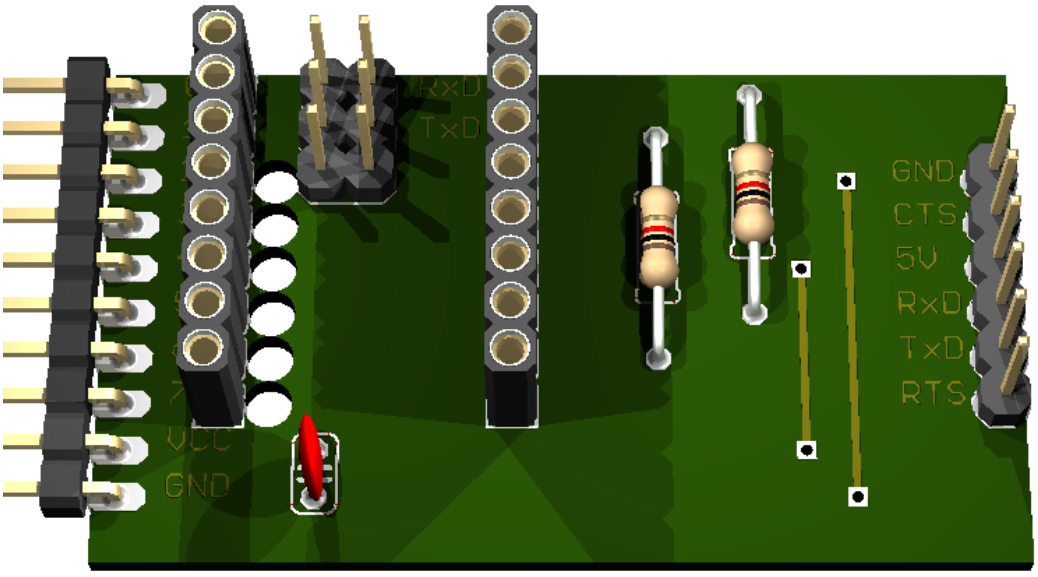

7.5.2 Right side

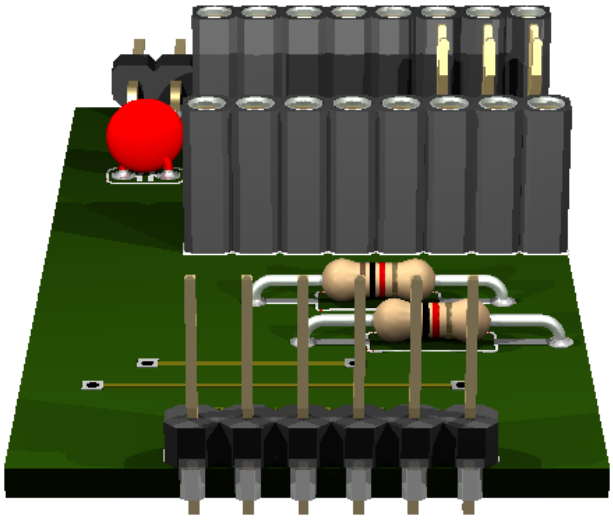

7.5.3 Left side

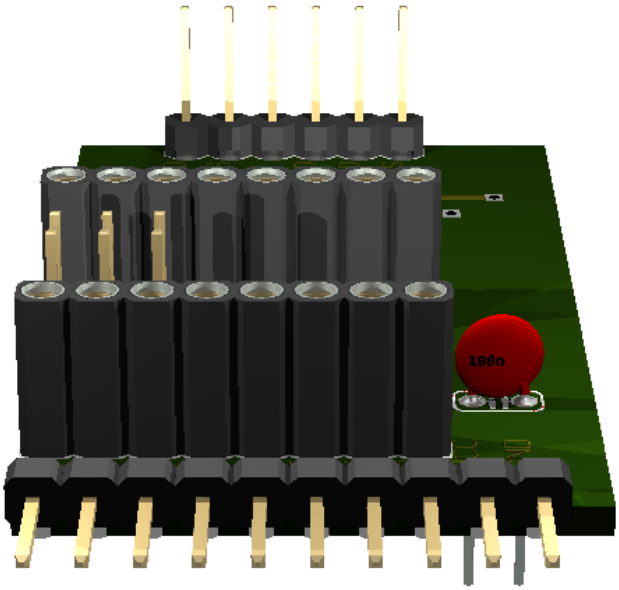

7.5.4 Bottom

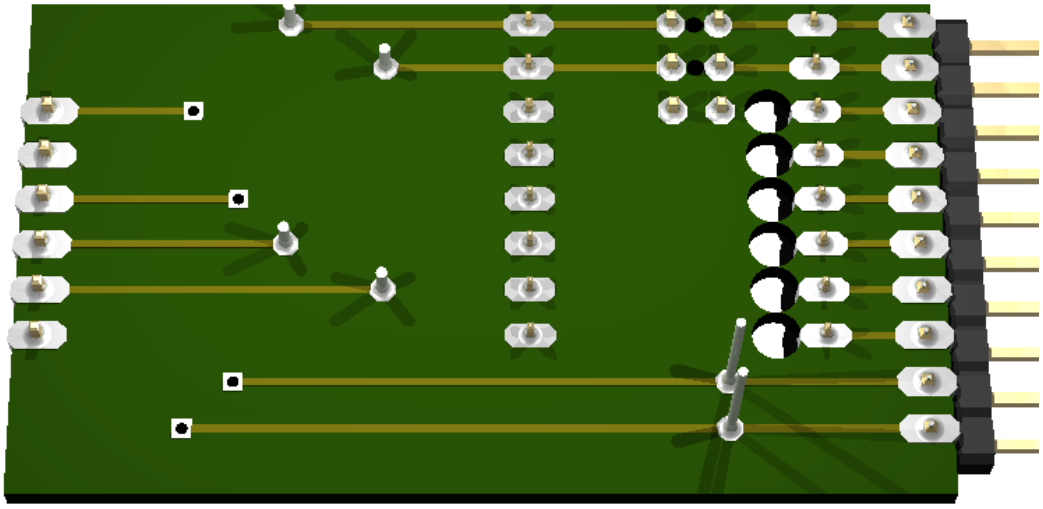

CHAPTER

EIGHT

ELECTRONIC COMPONENT TESTER

Status: OK

8.1 Schematic

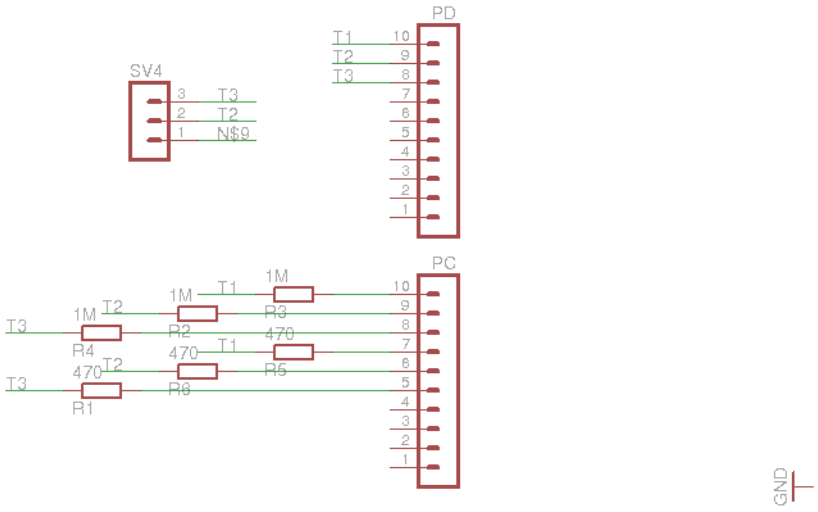

8.2 Board

Normal, bottom mirrored, wires only:

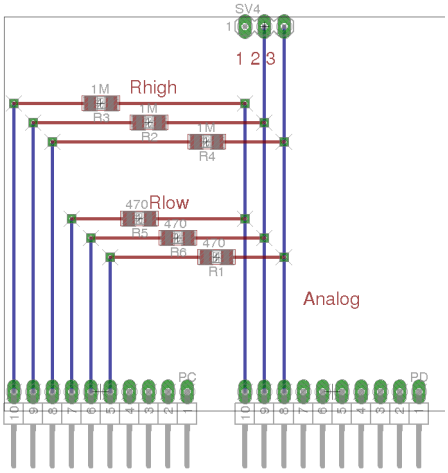
SV4
1 2 3
Rhigh
1M
R3
1M
R2
1M
R4
Rlow
470
R5
470
R6
470
R1
Analog
PC
PD

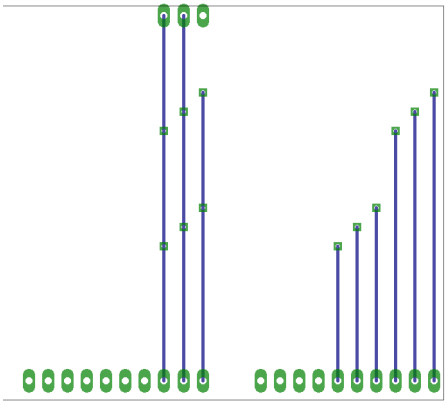

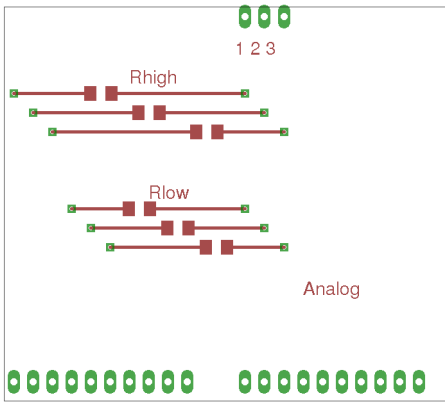
1 2 3
Rhigh
Rlow
Analog

8.3 Partlist

Table 8.1:

part	value	position
PC		(1.75 0.1)
PD		(2.95 0.1)
R1	470	(2.35 0.8)
R2	1M	(2 1.5)
R3	1M	(1.75 1.6)
R4	1M	(2.3 1.4)
R5	470	(1.95 1)
R6	470	(2.15 0.9)
SV4		(2.6 2)

8.4 3D view

8.4.1 Front

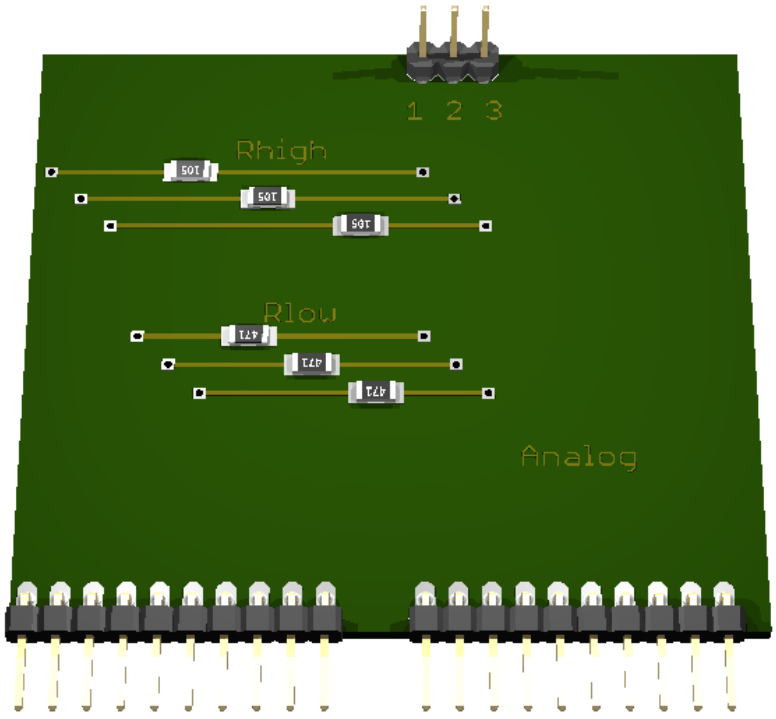

8.4.2 Right side

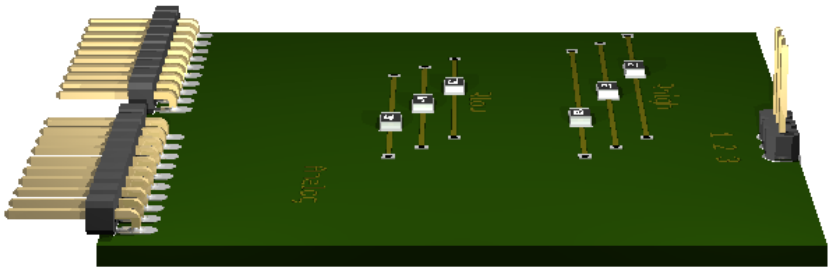

8.4.3 Left side

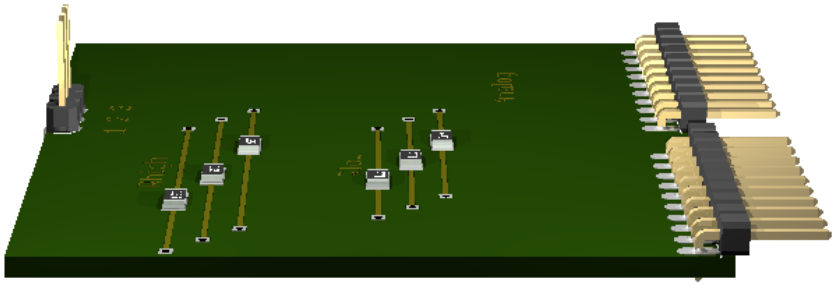

8.4.4 Bottom

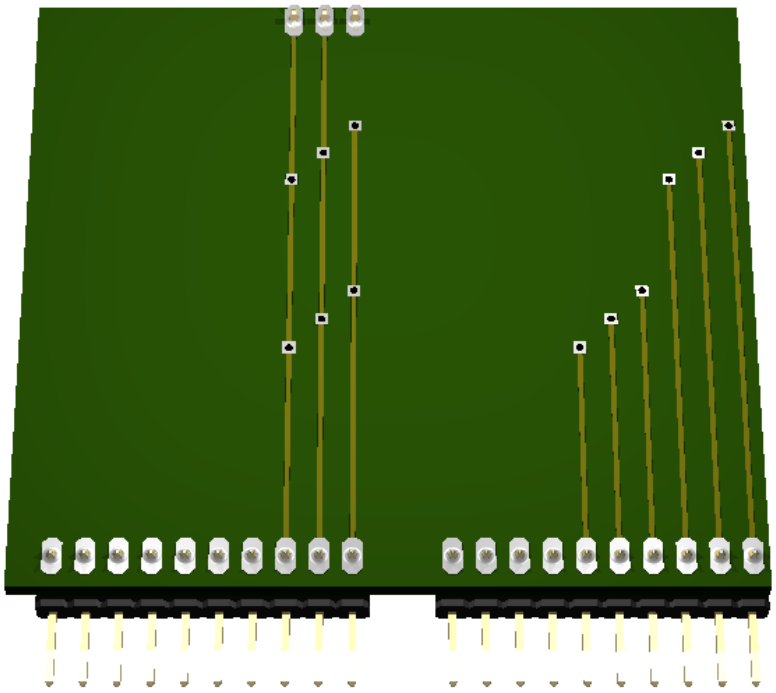

CHAPTER

NINE

V-USB ADAPTER

Status: OK

TODO:

- connect pullup with IO port

9.1 Schematic

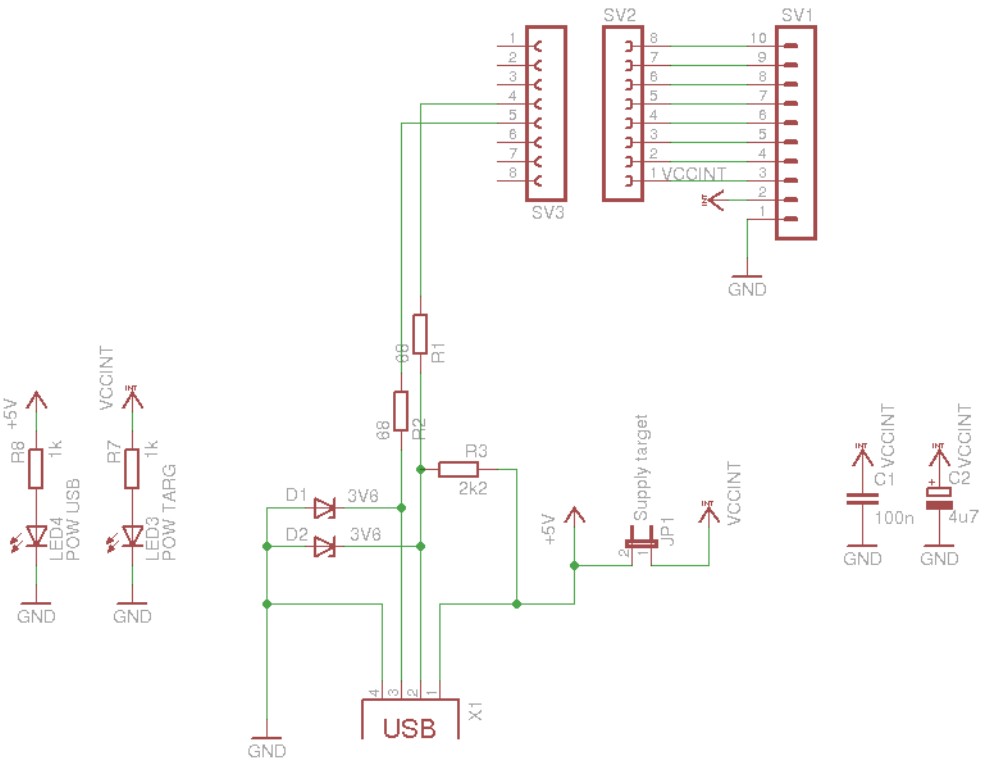

9.2 Board

Normal, bottom mirrored, wires only:

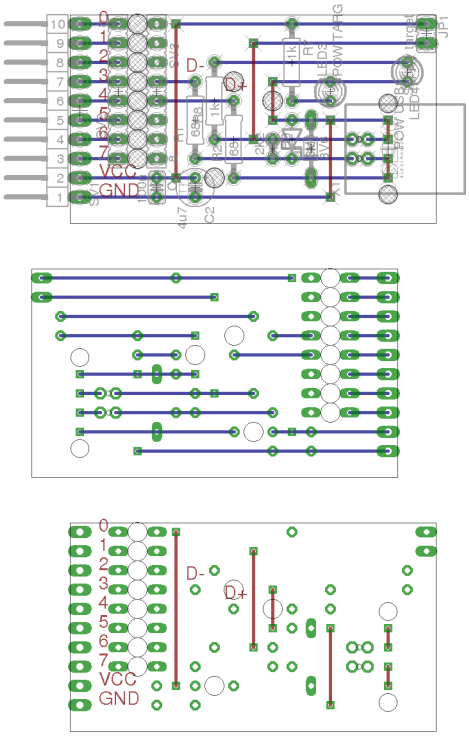

9.3 Partlist

Table 9.1:

part	value	position
C1	100n	(0.9 0.25)
C2	4u7	(1.1 0.25)
D1	3V6	(1.7 0.45)
D2	3V6	(1.6 0.5)
JP1	Supply target	(2.3 1.05)
LED3	POW TARG	(1.8 0.75)
LED4	POW USB	(2.2 0.85)
R1	68	(1.1 0.6)
R2	68	(1.3 0.5)
R3	2k2	(1.5 0.45)
R7	1k	(1.6 0.9)
R8	1k	(1.2 0.7)
SV1		(0.5 0.65)
SV2		(0.7 0.75)
SV3		(0.9 0.75)
X1		(2.1 0.45)

9.4 3D view

9.4.1 Front

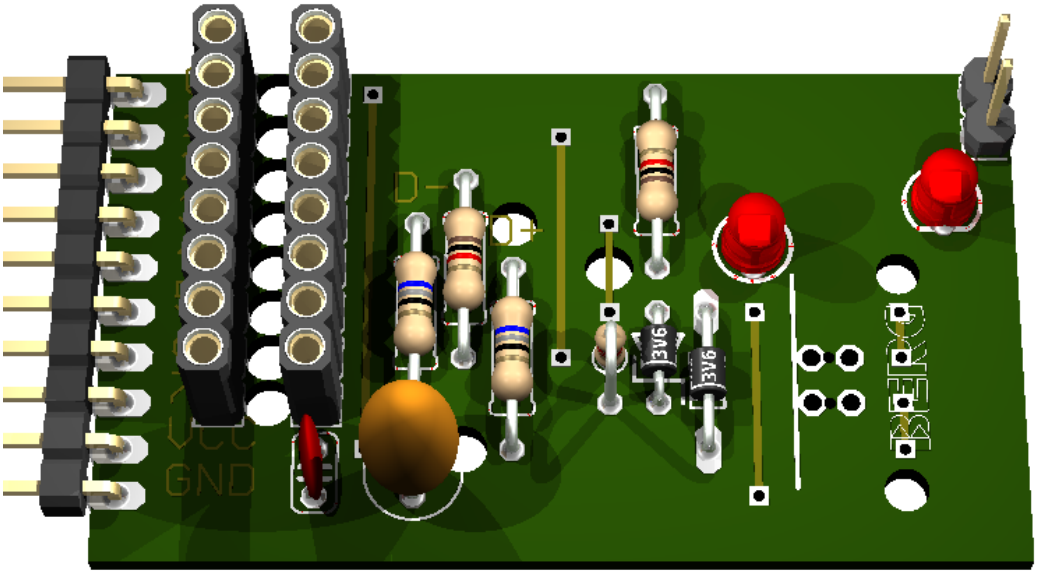

9.4.2 Right side

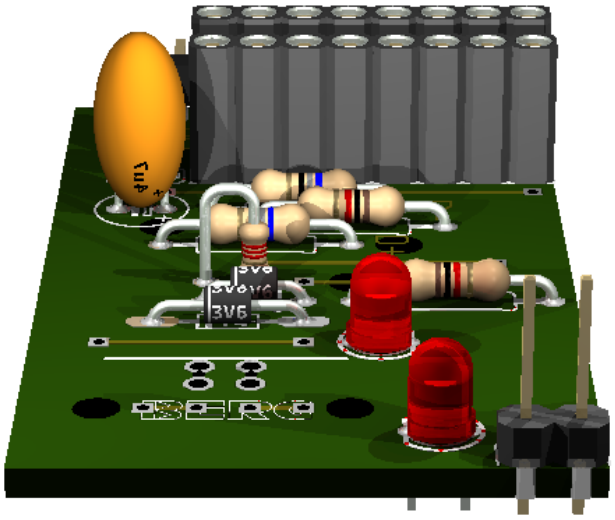

9.4.3 Left side

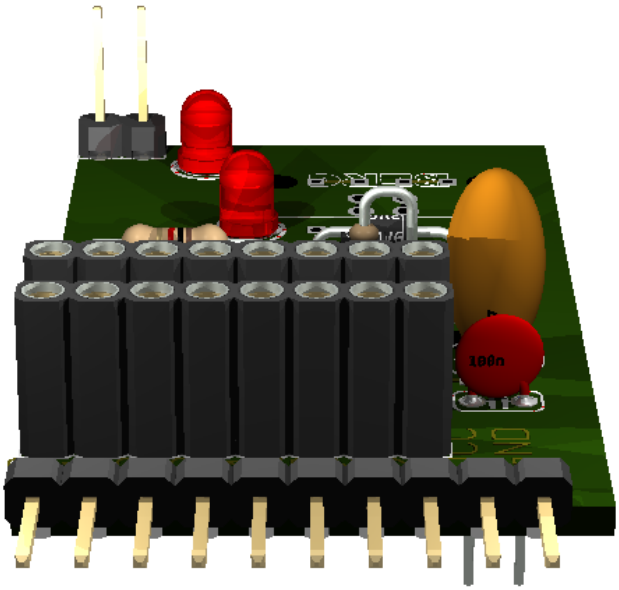

9.4.4 Bottom

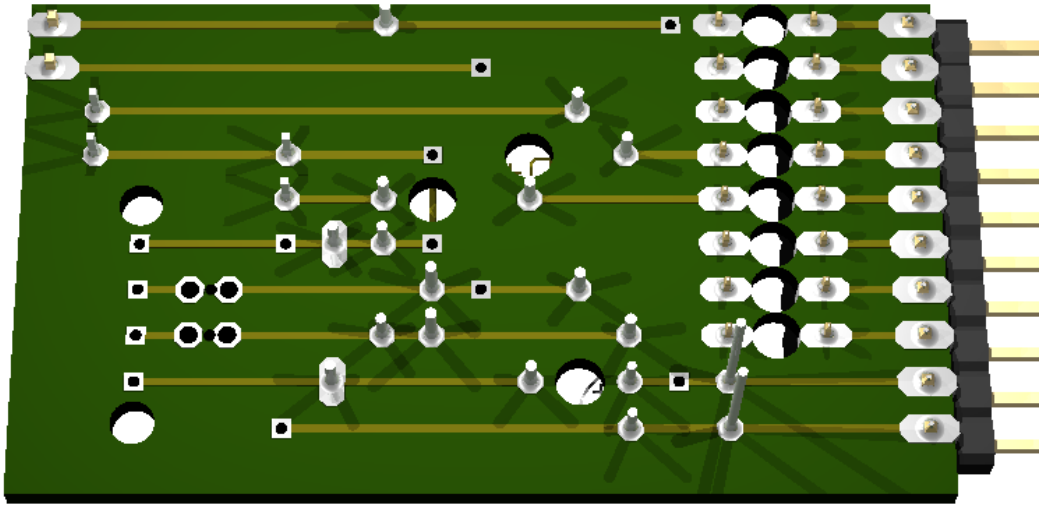

9.5 original source

http://vusb.wikidot.com/hardware

“Solution B: Level conversion on D+ and D- Level conversion with Zener diodes.

Instead of reducing the AVR’s power supply, we can limit the output voltage on D+ and D- with Zener diodes. We recommend 3.6 V low power types, those that look like 1N4148 (usually 500 mW or less). Low power types are required because they have less capacitance and thus cause less distortion on the data lines. And 3.6 V is better than 3.3 V because 3.3 V diodes yield only ca. 2.7 V in conjunction with an 1.5 kΩ (or more exactly 10 kΩ) pull-up resistor. With 3.3 V diodes, the device may not be detected reliably.

If you use Zener diodes for level conversion, please measure the voltage levels to make sure that the diodes you have chosen match the requirements.

Advantages of the Zener diode approach:

- Low cost.
- Easy to obtain.
- Entire design can be at 5 V.
- AVR can be clocked at high rates.

Disadvantages:

- Not a clean solution, a compromise between all parameters must be found.
- Zener diodes come with a broad range of characteristics, especially at low currents, results may not be reproducible.
- High currents when sending high-level.
- High level is different for signaling and in idle state because signaling uses high currents to drive the diodes while idle state is driven by a 1.5 kΩ pull-up resistor."