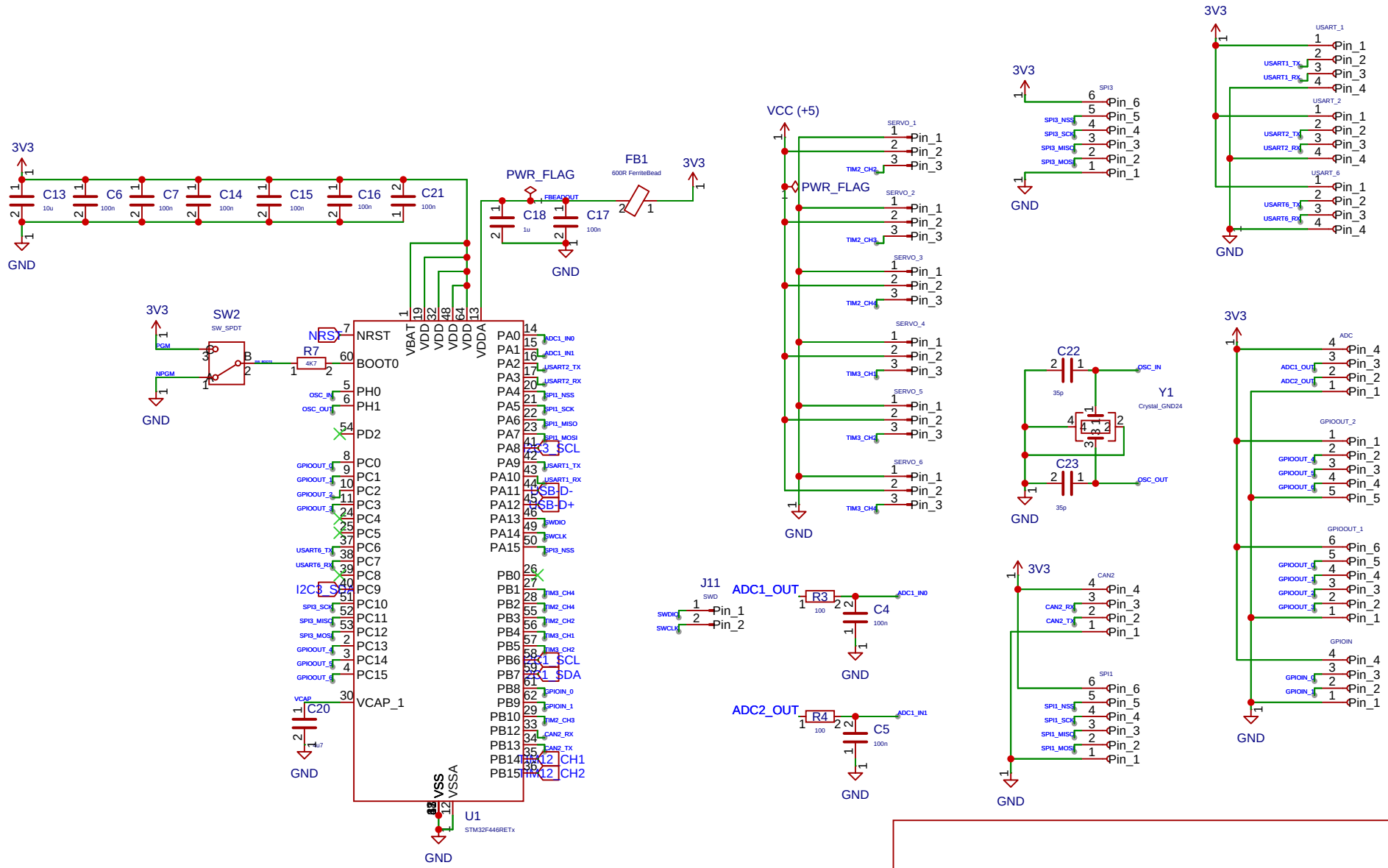
3V3
C13 10u
C6 100n
C7 100n
C14 100n
C15 100n
C16 100n
C21 100n
GND
PWR_FLAG
C18 1u
C17 100n
FB1 600R FerriteBead
FBEADOUT
VCC (+5)
SW2 SW_SPDT
PGM
NPGM
R7 4K7
NRST
BOOT0
PH0
PH1
PD2
PC0
PC1
PC2
PC3
PC4
PC5
PC6
PC7
PC8
PC9
PC10
PC11
PC12
PC13
PC14
PC15
VCAP_1
C20 4u7
VBAT
VDD
VDDA
VSS
VSSA
U1 STM32F446RETx
PA0
PA1
PA2
PA3
PA4
PA5
PA6
PA7
PA8
PA9
PA10
PA11
PA12
PA13
PA14
PA15
PB0
PB1
PB2
PB3
PB4
PB5
PB6
PB7
PB8
PB9
PB10
PB12
PB13
PB14
PB15
I2C3_SCL
I2C3_SDA
I2C1_SCL
I2C1_SDA
TIM12_CH1
TIM12_CH2
USB_D-
USB_D+
SWDIO
SWCLK
J11 SWD
ADC1_OUT
R3 100
C4 100n
ADC2_OUT
R4 100
C5 100n
SERVO_1
SERVO_2
SERVO_3
SERVO_4
SERVO_5
SERVO_6
TIM2_CH2
TIM2_CH3
TIM2_CH4
TIM3_CH1
TIM3_CH2
TIM3_CH4
SPI3
SPI3_NSS
SPI3_SCK
SPI3_MISO
SPI3_MOS
USART_1
USART1_TX
USART1_RX
USART_2
USART2_TX
USART2_RX
USART_6
USART6_TX
USART6_RX
C22 35p
C23 35p
Y1 Crystal_GND24
OSC_IN
OSC_OUT
ADC
ADC1_OUT
ADC2_OUT
GPIOOUT_2
GPIOOUT_1
GPIOIN
GPIOIN_0
GPIOIN_1
CAN2
CAN2_RX
CAN2_TX
SPI1
SPI1_NSS
SPI1_SCK
SPI1_MISO
SPI1_MOS
Sheet : /
File : fcbypoojit
Title : fc
Size : "A4"
Rev :
Id : /