FDD-YOLO: A Lightweight and Efficient YOLO Model for Fabric Defect Detection

1st Mingyun Li
China Jushi Co., Ltd
Jiaxing 314500, China

2nd Yuhao Hu
School of Information and Communication Engineering
Zhongyuan University of Technology
Zhengzhou 450007, China

3nd Tongle Hou
School of Information and Communication Engineering
Zhongyuan University of Technology
Zhengzhou 450007, China

4th Longkun Wang
School of Information and Communication Engineering
Zhongyuan University of Technology
Zhengzhou 450007, China

5th Qihang Zhou
School of Information and Communication Engineering
Zhongyuan University of Technology
Zhengzhou 450007, China

6th Junpu Wang*
School of Information and Communication Engineering
Zhongyuan University of Technology
Zhengzhou 450007, China
Email: zgdxwjp@zut.edu.cn

***Abstract*—Fabric defect detection is a critical task in intelligent textile manufacturing and quality control. Although recent deep learning-based methods have achieved remarkable progress by introducing increasingly complex architectures to enhance feature representation, this leads to high computational cost and slow inference that limit real-time deployment. In this work, we propose an improved lightweight model for fabric defect detection named FDD-YOLO, built upon the YOLOv8n framework. Specifically, the Wavelet Transform Downsampling (WTD) module is proposed to substitute the original pooling-based downsampling in the backbone. By decomposing feature maps into multi-frequency sub-bands, WTD captures both low-frequency structural context and high-frequency defect cues, preserving spatial integrity and reducing information loss. Then, the Additive Attention Head (A^2H) module is incorporated into the detection head to combine local convolution with global additive attention. A^2H effectively suppresses fabric texture noise and highlights small or elongated defect regions, while maintaining real-time inference capability. Extensive experiments on Tianchi fabric defect datasets demonstrate that the proposed FDD-YOLO achieves superior detection accuracy and robustness for tiny and elongated defects, outperforming the YOLOv8n baseline by 2.1% mAP while reducing GFLOPs by 19.3%.**

***Index Terms*—Fabric defect detection, Lightweight, YOLO, Wavelet transform downsampling, Additive attention head**

I. Introduction

Fabric surface quality plays a crucial role in ensuring the performance, aesthetics, and market competitiveness of textile products [1]–[3]. Traditional fabric inspection primarily relies on manual visual examination and conventional machine vision systems [4]–[6]. Although manual inspection remains effective in certain scenarios, it suffers from high labor intensity, strong subjectivity, and poor consistency. Machine vision-based approaches improve automation and accuracy to some extent, yet they still face significant limitations, particularly in insufficient generalization across different fabric types and textures. Moreover, these traditional methods often fail to identify subtle or early-stage anomalies embedded within complex weave patterns, leading to defect accumulation and undetected degradation over time. Such shortcomings impede the transformation of textile manufacturing toward intelligent, predictive, and high-precision quality control. Therefore, the adoption of advanced intelligent detection technologies is imperative to enhance defect recognition accuracy and enable comprehensive quality management throughout the entire production process.

In recent years, the rapid advancement of computer vision and deep learning has greatly promoted the development of automated fabric defect detection. Deep learning-based object detection approaches, particularly those built upon the YOLO series [7], have demonstrated impressive performance in fabric defect inspection tasks under complex and diverse fabric textures. On this basis, numerous studies have attempted to enhance YOLO-based models by introducing advanced modules such as multi-scale feature fusion [8], attention mechanisms [9], deformable convolution [10], and Transformer blocks [11] to capture subtle and irregular defect patterns more effectively. These improvements have achieved higher detection accuracy and better robustness against variations in illumination, texture, and defect morphology. However, the introduction of these complex structures often comes at the cost of significantly increased computational burden and inference latency, which severely limits their applicability in real-time or edge-deployed industrial inspection scenarios. Consequently, achieving an optimal balance between detection accuracy and computational efficiency remains a critical challenge in fabric surface defect detection.

To address this issue, this paper proposes a lightweight and efficient YOLO model for fabric defect detection, named FDD-YOLO. Specifically, a Wavelet Transform Downsampling (WTD) module is designed to replace the traditional pooling layers in the YOLOv8n backbone. Unlike conventional max or average pooling, which may discard critical spatial and frequency information, WTD performs multi-frequency decomposition on feature maps using Haar discrete wavelet transform. This enables FDD-YOLO to simultaneously capture low-frequency structural context and high-frequency defect cues, thereby improving sensitivity to tiny, low-contrast, and elongated defect regions. Second, an Additive Attention Head (A^2H) module is incorporated into the detection head to enhance discriminative feature learning. The A^2H mechanism combines local convolution with global additive self-attention, allowing the network to efficiently model long-range dependencies to highlight defect-specific features without introducing excessive computational overhead. Finally, these two modules form a lightweight yet efficient architecture that improves both the representation power and computational efficiency of YOLOv8n, enabling real-time automated fabric inspection in industrial manufacturing environments.

The key contributions of the FDD-YOLO model can be summarized as follows:

1. A lightweight wavelet transform downsampling module is proposed that uses wavelet decomposition to reduce information loss and better preserve defect details.

2. An efficient additive attention detection head is developed that combines convolution and additive attention to enhance small and elongated defect features.

3. The proposed FDD-YOLO achieves higher accuracy (+2.1% mAP) with lower computational cost (-19.3% GFLOPs) than the YOLOv8n baseline.

II. Related Works

In recent years, with the rapid development of computer vision and intelligent algorithms, vision-based fabric surface defect detection methods have received intensive attention. These existing approaches can generally be divided into two categories: traditional image-processing methods and deep-learning-based methods.

Traditional image-processing methods are typically lightweight and computationally efficient, yet they often lack robustness when confronted with complex fabrics, irregular textures, and subtle defects. For example, Chan et al. [5] detected fabric defects by analyzing changes in spatial frequency spectra caused by disruptions in weave regularity. However, such methods depend on handcrafted features and perform poorly on complex or non-periodic textures. Ngan et al. [6] applied wavelet-based methods for patterned fabric inspection by combining direct thresholding and golden image subtraction to improve defect localization. This approach, however, depends on fixed thresholds and reference templates, reducing adaptability to varying patterns and illumination. Wang et al. [12] adopted non-convex total variation regularized RPCA for fabric defect detection from cluttered backgrounds, but it requires multiple iterative optimizations, resulting in lower inference efficiency and limited real-time applicability.

In recent years, deep learning-based methods have become the mainstream approach for fabric defect detection, replacing traditional image processing techniques due to their superior representation and generalization capabilities. These approaches can generally be divided into two-stage and one-stage detection frameworks. Two-stage detectors, such as Faster R-CNN [13], [14] and Mask R-CNN [15], perform region proposal generation and classification sequentially, offering high accuracy but suffering from heavy computational costs and slow inference speed. In contrast, one-stage detectors—represented by the YOLO series, SSD, and RetinaNet—directly predict object categories and bounding boxes in a single forward pass, enabling real-time defect detection and thus becoming the dominant paradigm in industrial inspection tasks [16], [17].

To further improve YOLO-based fabric defect detection, various enhanced models have been developed. For example, Jing et al. [18] proposed an improved YOLOv3-based method that optimizes anchor boxes using k-means clustering and fuses multi-scale features to enhance defect detection on both plain and patterned fabrics. Gu et al. [19] introduced a novel object detection network Domain-fusion YOLO to enhance YOLOv5 series networks' generalizability in fabric defect detection. To further enhance defect detection in complex fabric backgrounds, Wu et al. [20] introduced the multiscale dilated attention mechanism into YOLOv11, strengthening the model's ability to detect small defects while reducing the impact of complex backgrounds. Xu et al. [21] proposed a fabric defect detection model YOLO-DLL using a dilation-wise residual module to capture multiscale contextual information from input feature maps, thereby enhancing the model's detection performance. Although these improved YOLO architectures achieve better accuracy, they usually rely on more complex network designs and feature enhancement modules, which inevitably increase computational overhead and reduce inference efficiency.

III. The Proposed Method

A. Overview

The overall architecture of the proposed FDD-YOLO model is built upon the YOLOv8n framework, which follows a typical three-stage structure consisting of a Backbone, a Neck, and a Detection Head, as shown in Fig. 1. Each stage performs a distinct yet complementary role in feature extraction, fusion, and defect prediction for fabric surface inspection.

The Backbone is responsible for hierarchical feature extraction from input fabric images. It gradually reduces spatial resolution while expanding receptive fields to capture rich semantic information. However, conventional pooling operations in the backbone tend to lose fine-grained spatial cues that are crucial for detecting tiny or elongated fabric defects. To address this limitation, the Wavelet Transform Downsampling (WTD) module is introduced to replace the original pooling layers.

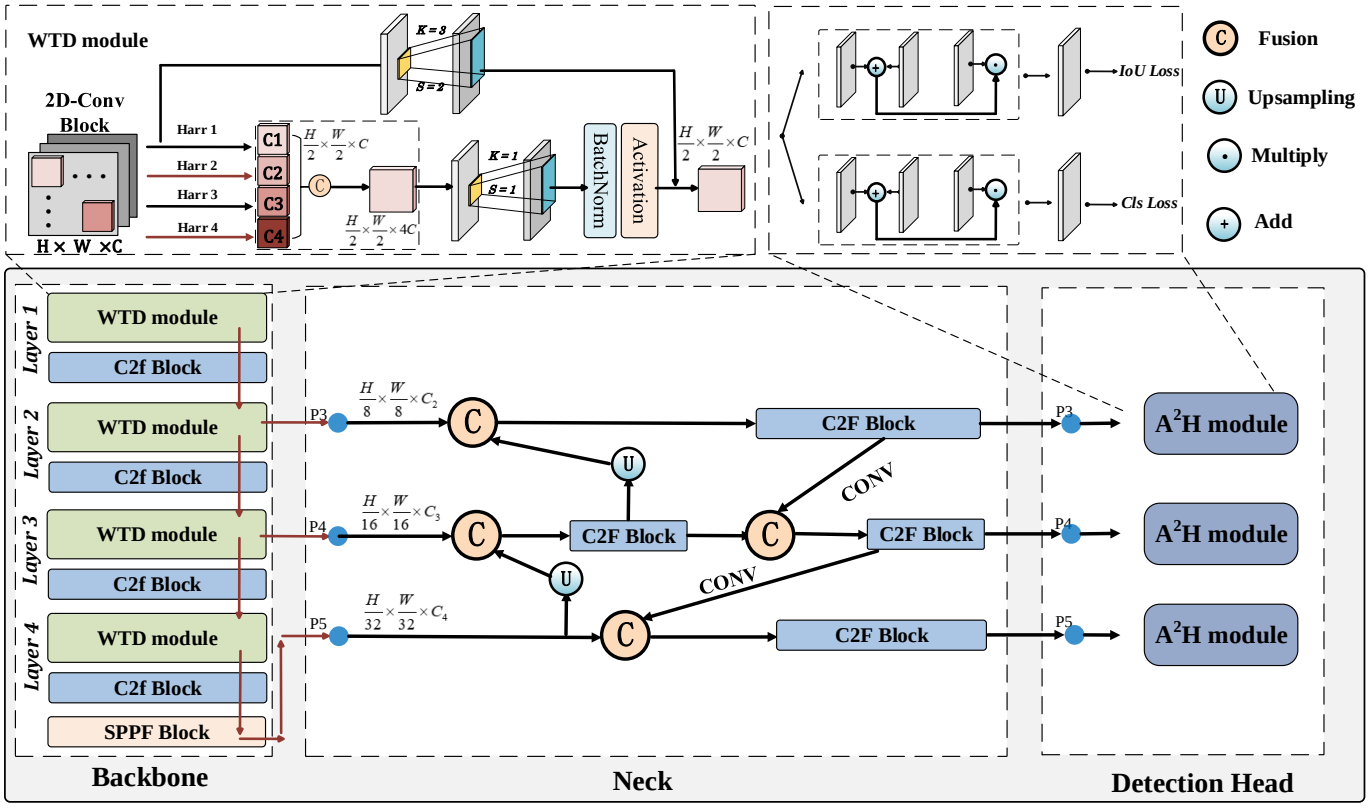

Fig. 1. The overall architecture of FDD-YOLO.

By decomposing feature maps into multi-frequency sub-bands, WTD effectively retains both low-frequency structural texture information and high-frequency defect details, enhancing the model's sensitivity to subtle and low-contrast defects while reducing information loss.

The Neck serves as a bridge between the backbone and the detection head. It employs multi-scale feature fusion to integrate semantic information from deep layers with detailed features from shallow layers. This fusion process enables the model to detect fabric defects of different sizes and shapes more effectively, ensuring scale adaptability and improved localization accuracy across diverse fabric patterns.

The Detection Head performs the final defect localization and classification. In conventional YOLO head relies solely on convolutional layers, which may have limited capability in distinguishing defects from cluttered fabric textures. To overcome this issue, an Additive Attention Head (A^2H) is incorporated into the detection head. By combining local convolution with global additive attention, A^2H enhances the model's ability to capture long-range dependencies while emphasizing defect-salient regions without sacrificing inference speed.

B. Wavelet Transform Downsampling

In one-stage detectors YOLOv8n, spatial downsampling is typically implemented using stride-2 convolutions or pooling layers to reduce spatial resolution and expand the receptive field. However, when applied to fabric defect inspection, these operations tend to smooth or discard high-frequency information, which is crucial for identifying tiny and elongated defects, ultimately degrading detection performance. Therefore, the Wavelet Transform Downsampling (WTD) module is developed to replace conventional pooling/stride operations in the backbone with frequency-aware downsampling that better preserves fine defect cues while retaining low-frequency structural context. Concretely, in a typical YOLOv8n backbone with multiple stages, a WTD module is inserted after a stage's feature block and before the next stage's feature block, so that the network receives downsampled, frequency-decomposed features for deeper processing.

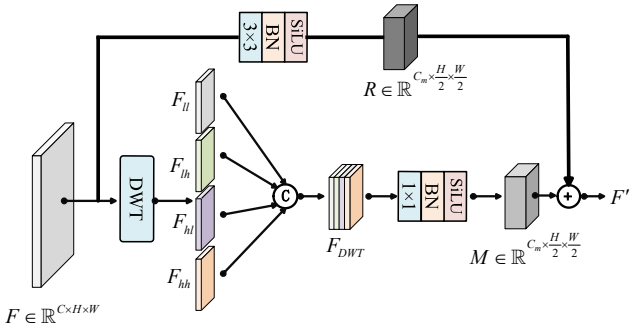

Fig. 2. The structure of Wavelet Transform Downsampling.

As shown in Fig. 2, a practical WTD module used in FDD-

YOLO consists of three parts: (1) a wavelet decomposition branch, (2) a residual convolution branch, and (3) a fusion step. The module operates as follows. Let the input feature tensor from the preceding backbone stage be denoted as $F \in \mathbb{R}^{C\times H\times W}$, where C, H, and W represent the channel number, height, and width, respectively.

1) Wavelet Decomposition Branch: In this branch, a discrete wavelet transform (DWT) is applied channel-wise to F, decomposing it into four frequency sub-bands: the low-low sub-band F_{ll}, containing low-frequency structural context (e.g., fabric weave background); the low-high sub-band F_{lh}, preserving horizontal high-frequency details such as elongated defects; the high-low sub-band $F_{hl}F_{hl}$, capturing vertical high-frequency patterns (e.g., columnar or streak-like defect edges); and the high-high sub-band F_{hh}, retaining diagonal and fine-grained components (including speck-like or irregular defects). Taking the Haar wavelet as an example in DWT, the four filters are defined as:

$$\alpha_{ll} = \begin{bmatrix} 1 & 1 \\ 1 & 1 \end{bmatrix}, \quad \alpha_{lh} = \begin{bmatrix} -1 & -1 \\ 1 & 1 \end{bmatrix}, \\ \alpha_{ll} = \begin{bmatrix} -1 & 1 \\ -1 & 1 \end{bmatrix}, \quad \alpha_{ll} = \begin{bmatrix} 1 & -1 \\ -1 & 1 \end{bmatrix} \tag{1}$$

This decomposition effectively separates texture and defect features in the frequency domain. While F_{ll} maintains global structure, the other three sub-bands emphasize edge and fine-grained variations, helping the model focus on subtle defects embedded in complex fabric backgrounds. Each sub-band has a spatial resolution of $H/2 \times W/2$, implying that downsampling is achieved implicitly during decomposition. Then, the four sub-bands are concatenated to form $F_{DWT} = \text{Concat}(F_{ll}, F_{lh}, F_{hl}, F_{hh})$. A lightweight 1×1 convolution followed by Batch Normalization (BN) and SiLU activation is applied to F_{DWT} to allow limited cross-band interaction and channel adjustment, yielding the output feature of the wavelet decomposition branch $M \in \mathbb{R}^{C\times H/2\times W/2}$.

2) Residual Convolution Branch: In parallel, a stride-2 convolution is performed directly on the original feature map F to capture complementary semantic and contextual information that may not be fully represented by fixed wavelet filters. This branch is implemented as a 3×3 convolution with stride 2, followed by BN and an activation function:

$$R = \text{SiLU}\left(\text{BN}\left(\text{Conv}_{3\times 3,\text{stride}=2}(F)\right)\right) \tag{2}$$

This residual pathway allows the model to adaptively learn discriminative representations for different fabric textures while maintaining compatibility with the wavelet decomposition branch.

3) Feature Fusion Step: The final step fuses the outputs of the two branches to form the enhanced downsampled feature map $F' = M + R$.

C. Additive Attention Head

The detection head is typically constructed using multiple convolutional layers to perform classification and bounding box regression. Although this design enables efficient local feature extraction, its receptive field is inherently limited and lacks the capacity to model long-range dependencies, thus restricting the the ability to identify small or elongated defects in complex fabric textures. To address this, an Additive Attention Head (A^2H) module is developed to replace the conventional convolutional prediction head. Meanwhile, A^2H adopts an additive attention formulation that fuses local convolutional features with globally modulated responses through element-wise interactions, thus enhancing global contextual modeling and defect saliency representation while maintaining the computational efficiency.

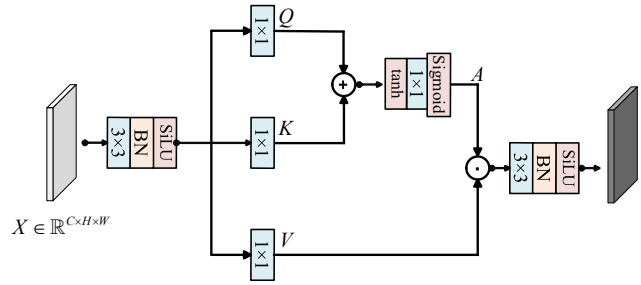

Fig. 3. The structure of Additive Attention Head.

As illustrated in Fig. 3, given an input feature map $X \in \mathbb{R}^{C\times H\times W}$ from the neck, A^2H first applies a lightweight 3×3 convolution followed by batch normalization and SiLU activation to encode fine-grained local representations. Three parallel 1×1 convolutions are then used to generate the query (Q), key (K), and value (V) feature spaces. Unlike traditional attention that computes similarity via inner products, A^2H computes an additive interaction between the query and key features:

$$A = \sigma\left(W_A \tanh(Q + K)\right) \tag{3}$$

where W_A is a learnable linear projection, $\tanh$ is the activation function, and σ denotes the sigmoid activation producing the attention map $A \in [0,1]^{H\times W}$.

The attention weights A are then multiplied with the value features V in an element-wise manner $(A \odot V)$ to highlight discriminative responses associated with potential defect regions while suppressing redundant background activations. Finally, a 1×1 convolution with normalization and activation is applied to refine the fused representation and adapt channel dimensions for fabric defect prediction.

By integrating the A^2H module into the multi-scale detection head, each prediction scale benefits from both fine-grained local feature awareness and global semantic consistency, which enables the model to better focus on subtle, low-contrast, and elongated fabric defects while suppressing background interference and preserving real-time efficiency.

IV. Experiment and Analysis

A. Experimental Environment

The network is trained on a PC equipped with an NVIDIA RTX 4090 GPU, and optimized using the Stochastic Gradient

Descent (SGD) algorithm for 300 epochs to ensure convergence and stability. The initial learning rate is set to 0.01, the batch size to 64, the momentum coefficient to 0.937, and the weight decay to 0.0005.

B. Evaluation Indicators

This study comprehensively evaluates the performance of the proposed model using multiple quantitative metrics, including average precision at a single IoU threshold of 0.5 (AP@0.5), mean AP (mAP), inference speed (FPS), model parameters (Params), and computational complexity (GFLOPs).

C. Datasets

The Tianchi fabric dataset was established and released by the Alibaba Tianchi Competition Team. It contains 5913 high-resolution images (2446×1000), including 5413 for training and 500 for testing. Covering 34 categories of defects, ranging from small point-like defects to long, slender defects.

D. Ablation Experiment

To evaluate the contribution of each proposed module to the overall performance of the model, a series of ablation experiments are conducted , as summarized in Table I. The baseline model is YOLOv8n, which achieves an AP@0.5 of 46.2%, a mAP of 24.2%, a frame rate of 146 FPS, 2.87 M parameters, and a computational complexity of 8.10 GFLOPs.

TABLE I
ABLATION EXPERIMENT ON THE TIANCHI DATASET

Baseline	WTD	A^2H	mAP/%	AP@0.5/%	FPS	Params/M	FLOPs/G
✓			24.2	46.2	146	2.87	8.10
✓	✓		25.0	47.4	155	2.64	7.33
✓		✓	25.1	48.7	158	2.43	6.95
✓	✓	✓	26.3	49.8	168	2.33	6.54

TABLE II
COMPARISON OF USING DIFFERENT WAVELET BASES.

wavelet basis	mAP/%	AP@0.5/%
Haar	25.0	47.4
Daubechies	24.7	47.0
Symlets	2.50	47.2
Coiflets	2.46	46.8

First, the Wavelet Transform Downsampling (WTD) module is introduced. By performing frequency-aware decomposition and preserving high-frequency defect cues, WTD enhances the model's ability to capture fine-grained textures and small defects. As a result, AP@0.5 increases by 1.2% and mAP by 0.8%, while FPS improves to 155 and the number of parameters and GFLOPs decreases to 2.64 M and 7.33 G, respectively. Meanwhile, we also evaluate the impact of different discrete wavelet bases when constructing the WTD module, and the comparison results are list in Table II. It can see that all four bases improve over the baseline, confirming that frequency-aware downsampling helps preserve defect cues. Among them, the Haar wavelet achieves the best overall performance, and thus it is adopted as the default wavelet basis in this paper.

TABLE III
COMPARATIVE EXPERIMENT ON THE TIANCHI DATASET

Methods	mAP/%	AP@0.5/%	FPS	Params/M	FLOPs/G
RT-DETR [22]	25.9	49.2	72	30.5	88
YOLOv5n [23]	25.2	48.1	142	3.69	4.3
YOLOv5s [23]	25.8	48.7	131	13.82	16
YOLOv6n [24]	19.9	36.8	189	4.42	11.35
YOLOv6s [24]	23.1	42.5	183	18.52	45.19
YOLOv7-tiny [25]	23.7	48.6	64	12.4	13.9
YOLOv8n [26]	24.2	46.2	79	2.87	8.10
FDD-YOLO	26.3	49.8	168	2.33	6.54

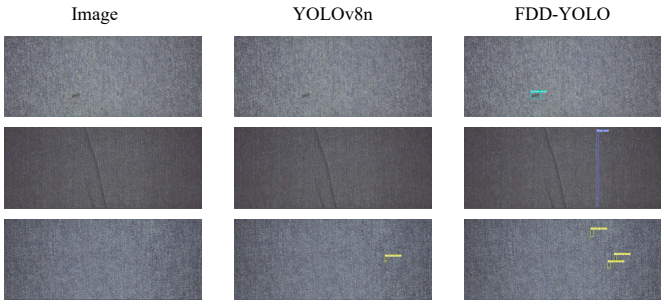

Fig. 4. Visual comparisons of different methods.

Then, the Additive Attention Head (A^2H) module is incorporated. With this module, the model achieves a mAP of 25.1% and AP@0.5 of 48.7%, corresponding to gains of 0.9% and 2.5%, respectively, over the baseline. Meanwhile, the computational cost further decreases to 6.95 GFLOPs with 2.43 M parameters, and the inference speed improves to 158 FPS, demonstrating the lightweight and efficient design of A^2H.

Finally, combining both WTD and A^2H modules forms the complete FDD-YOLO architecture. Benefiting from the complementary strengths of frequency-domain detail preservation and context-aware attention, the model achieves the highest performance, with an AP@0.5 of 49.8%, an mAP of 26.3%, and an inference speed of 168 FPS. Compared with the baseline YOLOv8n, FDD-YOLO improves AP@0.5 by 3.6% and mAP by 2.1%, while reducing parameters by 0.54 M and computational cost by 1.56 GFLOPs.

The above results demonstrate that both the WTD and A^2H modules contribute positively to detection performance, verifying the effectiveness of the proposed design.

E. Comparative Experiment

To validate the effectiveness of the proposed FDD-YOLO model, comprehensive comparative experiments are conducted on the Tianchi fabric defect dataset against several object detection models, including RT-DETR and various versions of YOLO.

As shown in Table III, the proposed FDD-YOLO demonstrates comprehensive advantages over other methods. Specifically, FDD-YOLO achieves the highest mAP of 26.3% and the best AP@0.5 of 49.8%, highlighting its superior detection accuracy. More importantly, FDD-YOLO attains this performance lead while simultaneously being the most efficient

model in terms of computational complexity and speed. With only 2.33 M parameters and 6.54 GFLOPs, it has the smallest model size and the lowest computational cost. Furthermore, it achieves an impressive inference speed of 168 FPS, which is significantly faster than many competitors, including YOLOv8n (79 FPS) and RT-DETR (72 FPS). The visual comparisons of detection results in Fig. 4 further confirm the effectiveness of our method, where FDD-YOLO exhibits fewer missed detections for small defect spots and provides more precise detection for elongated defects, due to the enhanced capability in preserving high-frequency details and suppressing background texture noise.

In conclusion, FDD-YOLO strikes an excellent balance between high accuracy, low computational cost, and fast inference speed. It not only achieves the highest detection precision but also maintains the lightweight characteristics necessary for real-time deployment, making it highly suitable for practical intelligent textile manufacturing and quality control.

V. Conclusion

In this paper, we propose FDD-YOLO, a lightweight and efficient detection framework designed for accurate and real-time fabric defect detection. Built upon the YOLOv8n architecture, the model introduces two key improvements: the Wavelet Transform Downsampling (WTD) module and the Additive Attention Head (A^2H) module. The WTD module replaces conventional pooling with a frequency-aware downsampling strategy, effectively preserving fine-grained defect cues while maintaining low-frequency structural integrity. The A^2H module enhances global context perception and inter-channel interaction through an additive attention mechanism, enabling the detector to focus on subtle, low-contrast, and elongated defects embedded in complex fabric textures. Extensive experiments on the Tianchi fabric dataset demonstrate that FDD-YOLO achieves higher detection accuracy and better robustness compared with the baseline YOLOv8n model, while reducing computational complexity. These results verify the effectiveness of the proposed modules in balancing detection precision, model efficiency, and deployment feasibility.

VI. Funding

This work was supported in part by the Henan Key Research and Development Projects 241111220700, in part by China National Textile and Apparel Council Technology Guiding Projects 2025055, 2025010, and in part by Natural Science Foundation of Zhongyuan University of Technology K2025YB004.

References

[1] R. Yang, N. Guo, B. Tian, et al., "Fabric defect detection via saliency model based on adjacent context coordination and transformer," *Journal of Engineered Fibers and Fabrics*, vol. 19, 2024.

[2] J. Wang, C. Li, Z. Liu, et al., "Combing deep and handcrafted features for NTV-NRPCA based fabric defect detection," in *Proc. Chinese Conf. Pattern Recognition Comput. Vision (PRCV)*, Cham, Switzerland: Springer, 2019, pp. 479–490.

[3] Q. Liu, C. Wang, Y. Li, et al., "A fabric defect detection method based on deep learning," *IEEE Access*, vol. 10, pp. 4284–4296, 2022.

[4] Y. Dong, J. Wang, C. Li, et al., "Fusing multilevel deep features for fabric defect detection based NTV-RPCA," *IEEE Access*, vol. 8, pp. 161872–161883, 2020.

[5] C. Chan, G. K. H. Pang, "Fabric defect detection by Fourier analysis," *IEEE Trans. Ind. Appl.*, vol. 36, no. 5, pp. 1267–1276, 2000.

[6] H. Y. T. Ngan, G. K. H. Pang, S. P. Yung, et al., "Wavelet based methods on patterned fabric defect detection," *Pattern Recognit.*, vol. 38, no. 4, pp. 559–576, 2005.

[7] M. Hussain, "YOLO-v1 to YOLO-v8, the rise of YOLO and its complementary nature toward digital manufacturing and industrial defect detection," *Machines*, vol. 11, no. 7, p. 677, 2023.

[8] Z. Zhou, W. Deng, Z. Zhu, et al., "Fabric defect detection based on feature fusion of a convolutional neural network and optimized extreme learning machine," *Textile Res. J.*, vol. 92, no. 7-8, pp. 1161–1182, 2022.

[9] B. Fang, X. Long, F. Sun, et al., "Tactile-based fabric defect detection using convolutional neural network with attention mechanism," *IEEE Trans. Instrum. Meas.*, vol. 71, pp. 1–9, 2022.

[10] X. Luo, Z. Cheng, Q. Ni, et al., "Defect detection algorithm for fabric based on deformable convolutional network," *Textile Res. J.*, vol. 93, no. 9-10, pp. 2342–2354, 2023.

[11] J. Wang, G. Xu, F. Yan, et al., "Defect transformer: An efficient hybrid transformer architecture for surface defect detection," *Measurement*, vol. 211, p. 112614, 2023.

[12] J. Wang, G. Xu, C. Li, et al., "Surface defects detection using non-convex total variation regularized RPCA with kernelization," *IEEE Trans. Instrum. Meas.*, vol. 70, pp. 1–13, 2021.

[13] Z. Liu, X. Liu, C. Li, et al., "Fabric defect detection based on faster R-CNN," in *Proc. 9th Int. Conf. Graphic Image Process. (ICGIP 2017)*, Bellingham, WA, USA: SPIE, 2018, vol. 10615, pp. 55–63.

[14] N. Kaur, S. Pandey, N. Kalra, "MFR-CNN: a modified faster R-CNN approach based on bounding box and reliable score for cloth image retrieval," *Multimedia Tools Appl.*, vol. 84, no. 19, pp. 21075–21103, 2025.

[15] G. Revathy, R. Kalaivani, "Fabric defect detection and classification via deep learning-based improved Mask RCNN," *Signal Image Video Process.*, vol. 18, no. 3, pp. 2183–2193, 2024.

[16] Z. Liu, S. Liu, C. Li, et al., "Fabric defects detection based on SSD," in *Proc. 2nd Int. Conf. Graphics Signal Process.*, 2018, pp. 74–78.

[17] Yang Z, Liu Y. "A steel surface defect detection method based on improved RetinaNet" in *Proc. 2nd Int. Conf. Graphics Signal Process.*, vol. 15, no. 1, pp. 6045, 2025.

[18] J. Jing, D. Zhuo, H. Zhang, et al., "Fabric defect detection using the improved YOLOv3 model," *Journal of Engineered Fibers and Fabrics*, vol. 15, 2020.

[19] M. Gu, J. Zhou, R. Pan, et al., "DF-YOLO: An attempt on enhancing generalization in fabric defect detection based on YOLO network," *Textile Res. J.*, vol. 95, no. 7-8, pp. 748–766, 2025.

[20] T. Wu, F. Xie, "MSI-YOLO: an efficient model for multiscale fabric defect detection based on improved YOLOv11," *Textile Res. J.*, 2025.

[21] S. Xu, C. Wan, W. Feng, et al., "YOLO-DLL: an effective detection method for fabric defects," *Textile Res. J.*, 2025.

[22] Y. Zhao, W. Lv, S. Xu, et al., "Detrs beat yolos on real-time object detection," in *Proc. IEEE/CVF Conf. Comput. Vis. Pattern Recognit.*, 2024, pp. 16965–16974.

[23] G. Jocher, A. Stoken, J. Borovec, et al., "ultralytics/yolov5: v3.0," Zenodo, 2020.

[24] C. Li, L. Li, H. Jiang, et al., "YOLOv6: A single-stage object detection framework for industrial applications," arXiv preprint arXiv:2209.02976, 2022.

[25] C. Y. Wang, A. Bochkovskiy, H. Y. M. Liao, "YOLOv7: Trainable bag-of-freebies sets new state-of-the-art for real-time object detectors," in *Proc. IEEE/CVF Conf. Comput. Vis. Pattern Recognit.*, 2023, pp. 7464–7475.

[26] R. Varghese, M. Sambath, "Yolov8: A novel object detection algorithm with enhanced performance and robustness," in *Proc. 2024 Int. Conf. Adv. Data Eng. Intell. Comput. Syst. (ADICS)*, IEEE, 2024, pp. 1–6.