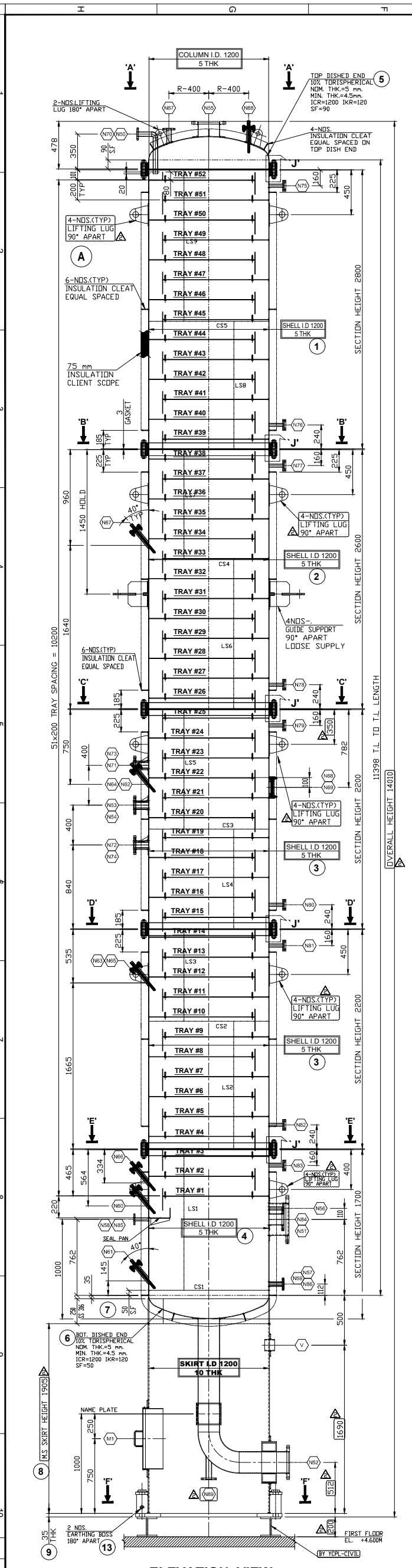

ELEVATION VIEW

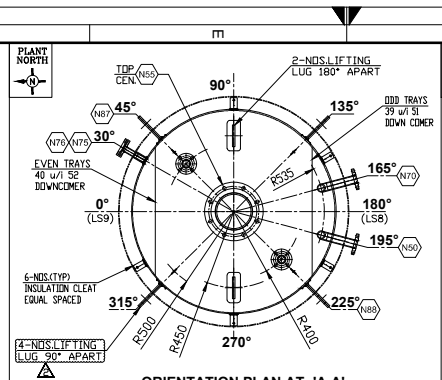

ORIENTATION PLAN AT -'A-A'

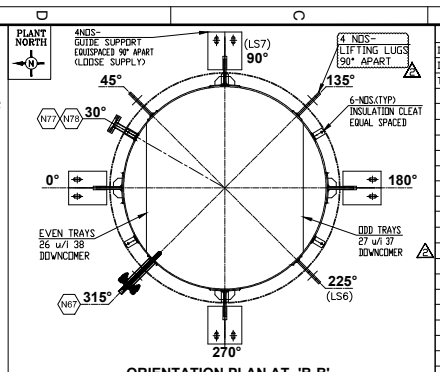

ORIENTATION PLAN AT -'B-B'

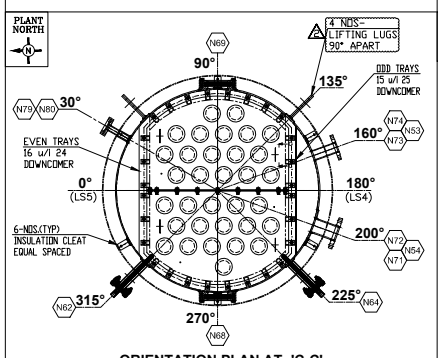

ORIENTATION PLAN AT -'C-C'

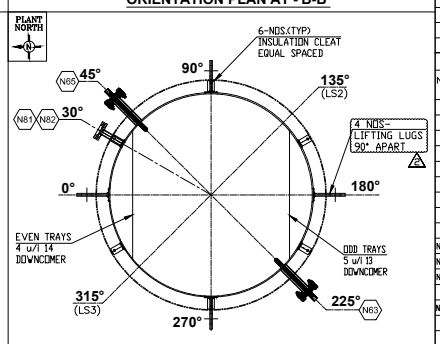

ORIENTATION PLAN AT -'D-D'

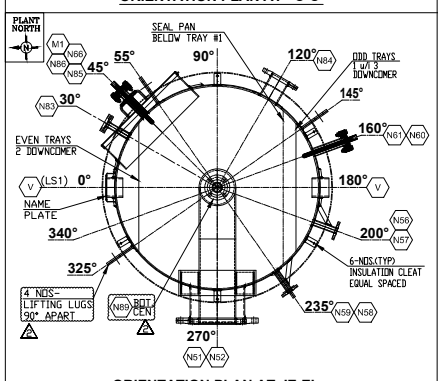

ORIENTATION PLAN AT -'E-E'

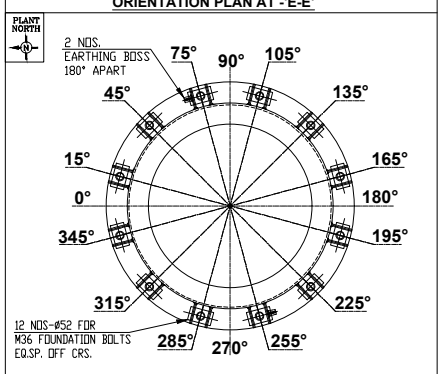

ORIENTATION PLAN AT -'F-F'

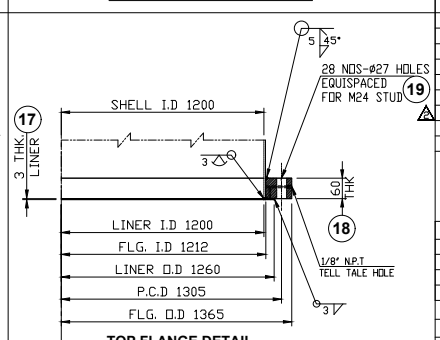

TOP FLANGE DETAIL

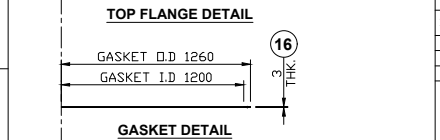

GASKET DETAIL

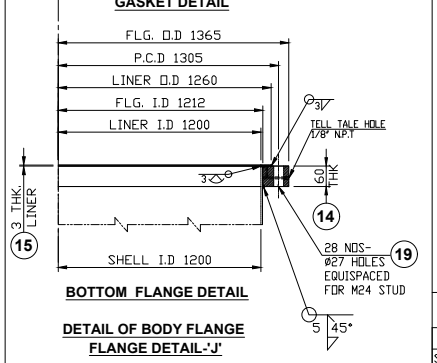

BOTTOM FLANGE DETAIL

DETAIL OF BODY FLANGE FLANGE DETAIL-'J'

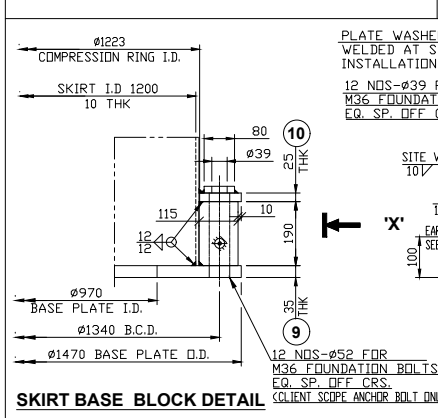

SKIRT BASE BLOCK DETAIL

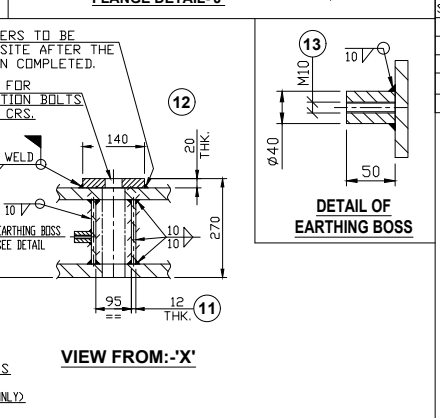

VIEW FROM:-'X'

DETAIL OF EARTHING BOSS

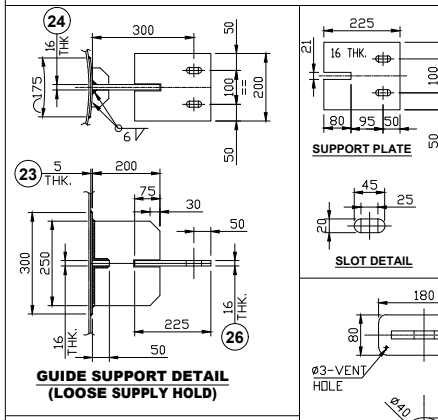

GUIDE SUPPORT DETAIL (LOOSE SUPPLY HOLD)

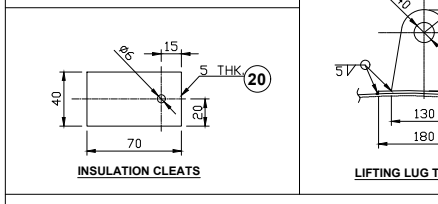

INSULATION CLEATS

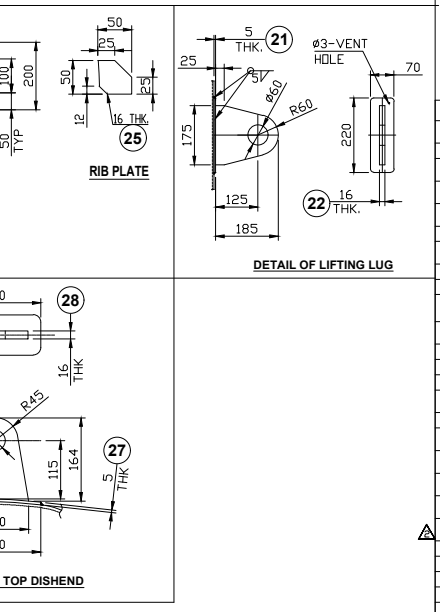

SUPPORT PLATE

RIB PLATE

DETAIL OF LIFTING LUG

SLOT DETAIL

LIFTING LUG TOP DISHEND

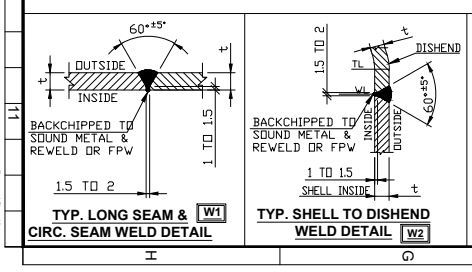

TYP. LONG SEAM & CIRC. SEAM WELD DETAIL (W1)

TYP. SHELL TO DISHEND WELD DETAIL (W2)

DESIGN DATA

DESIGN CODE	-	ASME SEC VIII DIV.1 ED.2019
INSPECTION AGENCY		CDPS/CLIENT/TPI
TYPE		COLUMN (BUBBLE CAP)

SR.NO.	PARAMETER	UNITS	SHELL SIDE
1	OPERATING PRESSURE	Kg/cm²(g)	1.0
2	DESIGN PRESSURE	Kg/cm²(g)	2.0
3	OPERATING TEMPERATURE	°C	110
4	DESIGN TEMPERATURE	°C	120
5	HYDRO TEST TEMPERATURE	°C	17-48
6	HYDRO TEST POSITION	-	HORIZONTAL
7	WORKING MEDIA	-	-
8	MAWP	Kg/cm²(g)	2
9	HYDRO TEST PRESSURE(H/V)	Kg/cm²(g)	3.8/2.6
10	CAPACITY (WORKING/GROSS)	m³	~/12.96
11	VISCOSITY OF FLUID	cP	-
12	DENSITY OF FLUID	Kg/m³	-
13	CORROSION ALLOWANCE	MM	NA
14	JOINT EFFICIENCY (SHELL/DISH END)	-	0.85/1
15	RADIOGRAPHY (SHELL/DISH END)	-	SPOT+ALL 'T' JOINTS/FULL
16	INSULATION	MM	75mm THK. (CLIENT SCOPE)
17	SURFACE FINISH/PANTING	SS PART	ACID PICKLING & PASSIVATION
18		MS/CS PART	SAND BLASTING SA 2 1/2 GRADE & TWO COATS OF EPOXY ZINC
19	FABRICATED WEIGHT	Kgs	~5680
20	HYDRO TEST WEIGHT	Kgs	~18640
21	OPERATING WEIGHT	Kgs	~

NOZZLE SCHEDULE

NOZZLE MARK	SERVICE	QTY.	SIZE NB	SIZE Sch/THK	FLANGES STD.	FLANGES RATING	FLANGES TYPE	RF.PAD OD.xTHK.	PROJ.	REMARK
N55	VAPOR OUT	1	200	5 THK	ASME B16.5	150#	SORF	320x5	150	
N50	FRESH ALCOHOL IN	1	40	40S	ASME B16.5	150#	SORF		150	
N70	FEED IN FROM M-1104	1	40	40S	ASME B16.5	150#	SORF		150	
N53	COL. 16 BOTTOM LIQUID FEED IN	1	50	40S	ASME B16.5	150#	SORF		150	
N54	WEAK ALCOHOL FEED IN	1	80	40S	ASME B16.5	150#	SORF	190x5	150	
N71	WEAK ALCOHOL FEED IN	1	80	40S	ASME B16.5	150#	SORF	190x5	150	
N72	WEAK ALCOHOL FEED IN	1	80	40S	ASME B16.5	150#	SORF	190x5	150	
N73	COL. 16 BOTTOM LIQUID FEED IN	1	50	40S	ASME B16.5	150#	SORF		150	
N74	COL. 16 BOTTOM LIQUID FEED IN	1	50	40S	ASME B16.5	150#	SORF		150	
N75 TO N83	SPARE WITH B/F	9	25	40S	ASME B16.5	150#	SORF		150	BLRF
N61 TO N63	RTD	3	40	40S	ASME B16.5	150#	SORF		200	
N66 TO N67	RTD	2	40	40S	ASME B16.5	150#	SORF		200	
N60	TEMPERATURE GAUGE	1	40	40S	ASME B16.5	150#	SORF		200	
N64 TO N65	TEMPERATURE GAUGE	2	40	40S	ASME B16.5	150#	SORF		200	
N68,69	LG/SG	2	100		PAD TYPE					
N56,57	LEVEL TRANSMITTER (RADAR TYPE)	2	25	40S	ASME B16.5	150#	SORF		150	
N58,59	LEVEL GAUGE	2	25	40S	ASME B16.5	150#	SORF		150	
N51	REBOILER TO COLUMN VAPOR IN	1	300	5 THK	ASME B16.5	150#	SORF	425x5	150	
N52	COLUMN TO REBOILER LIQUID OUT	1	200	5 THK	ASME B16.5	150#	SORF	320x5	200	
N84	PSV	1	100	40S	ASME B16.5	150#	SORF	217x5	150	
N85	PRESSURE GAUGE,	1	25	40S	ASME B16.5	150#	SORF		150	
N86	PRESSURE TRANSMITTER	1	40	40S	ASME B16.5	150#	SORF		150	
N87	PRESSURE TRANSMITTER	1	40	40S	ASME B16.5	150#	SORF		150	
N88	TEMPERATURE ELEMENT	1	40	40S	ASME B16.5	150#	SORF		150	
N89	EFFLUENT LINE	1	50	40S	ASME B16.5	150#	SORF		250	SEE DETAILS
V	VENT	2	100	40S	-	-	-	217x10	50	
M1	MANWAY	1	ID600	5 THK	-	-	-	770x10	50	COVER

LIST OF RELATED DRAWINGS.

SR.NO.	DESCRIPTION	DRAWING NOS.
1	NOZZLE DETAIL FOR COLUMN (C-1102)	CDPS-SD-634-DR-C-1102-002
2	NAME PLATE & NAME PLATE BRACKET DETAIL	CDPS-SD-634-DR-C-1102-003
3	INTERNALS ATTACHMENT DRAWING.	CDPS-SD-634-DR-C-1102-004

COLUMN INTERNALS DETAIL

ITEM	QTY.	DRAWING OR PART NO.	DESCRIPTION	MATERIAL	REMARKS
A	1	977-201-001	CD 1 PASS BUBBLE CAP TRAYS #1 U/I #52	SS 316L	-

GENERAL NOTES:-

1. ALL DIMENSIONS ARE IN MM. UNLESS OTHERWISE SPECIFIED.
2. ALL FLANGES TO BE DRILLED AS PER ASME B16.5 UNLESS OTHERWISE SPECIFIED.
3. ALL NOZZLE PIPE UP TO 150 NB SHALL BE SEAMLESS & ABOVE CAN BE FABRICATED WITH 100% RADIOGRAPHY.
4. ALL FLANGE BOLT HOLES SHALL BE STRADDLE TO VESSEL PRINCIPAL AXIS,UNLESS OTHERWISE SPECIFIED.
5. ALL NOZZLE 50 NB AND BELOW TO BE PROVIDED WITH 2 NOS. STIFFENER @ 90° APART.
6. ALL NOZZLE 65NB AND ABOVE TO BE PROVIDED WITH RF PAD.
7. ALL RF PAD SHALL BE PROVIDED WITH 1/4" NPT TELL TALE HOLE.
8. ALL RF PAD SHALL BE PNEUMATICALLY TESTED AT 1.5 kg/cm²(g) WITH SOAP SOLUTION.
9. MACHINED SURFACES SHALL BE PROTECTED BY RUST PREVENTIVE COMPOUND.
10. ALL EXTERNAL ATTACHMENT WELDED TO PRESSURE PART SHALL BE SAME AS PRESSURE PART OR EQUIVALENT MOC.
11. WHEREVER POSSIBLE BUTT WELDS, NOZZLE TO SHELL WELDS SHALL BE BACK CHIP TO SOUND METAL AND REWELD.
12. ALL T/T HOLES TO BE BE SEALED WITH HARD GREASE BEFORE DISPATCH.
13. EQUIPMENT SHALL BE WELL DRIED & THOROUGHLY CLEANED BOTH INSIDE & OUTSIDE AND ALL WATER, DIRT, SAND, WELD METAL, SPATTER, WELD ELECTRODES, STUB & FOREIGN MATERIAL SHALL BE REMOVED AFTER HYDROTEST.
14. HYDROSTATIC TEST PRESSURE SHALL BE HELD FOR ATLEAST ONE HOUR DURING THE TEST. TEST MEDIUM SHALL BE PORTABLE WATER CONTAINS NO MORE THAN 25 PPM OF CHLORIDE.
15. ALL FLANGE GASKET SEATING FACE SHALL HAVE A FLANGE SURFACE FINISH OF 125-250 MICRO INCH AARH.
16. ALL MACHINED SURFACES SHALL BE CHECKED FOR SURFACE DEFECT BY DP/MP TEST AFTER MACHINING.
17. HYDROTEST SHALL BE CARRIED OUT WITH SERVICE GASKET ONLY.
18. VENDOR TO SUPPLY 2 NOS BODY FLANGE GASKET SETS ALONG WITH COLUMN.
19. ALL NOZZLES NOS AS PER G.A DRAWING STENSILING TO BE DONE ON EVERY NOZZLE.

HOLD LIST

SR.NO.	DESCRIPTION
1.	DELETED
2.	DELETED
3.	GUIDE SUPPORT ELEVATION, ORIENTATION & DETAILS
4.	DELETED
5.	DELETED

TOTAL WEIGHT IN KGS.= 4493.6

BILL OF MATERIAL

SR.NO.	DESCRIPTION	QTY.	MATERIAL	FINAL DIMENSION/SIZE	WEIGHT
28	LIFTING LUG	2	IS2062 GR E250BR	16 THK x 130 W x 164 LG	5.35
27	PAD FOR LIFTING LUG(TOP DISHEND)	2	SA 240 GR 316	5 THK x 80 W x 180 LG	1.15
26	SUPPORT PLATE	4	IS2062 Gr.E250 BR	16 THK. x 225 W x 200 LG.	22.60
25	RIB PLATE	8	IS2062 Gr.E250 BR	16 THK. x 50 W x 50 LG.	2.50
24	PLATE	4	IS2062 Gr.E250 BR	16 THK. x 200 W x 250 LG.	25.1200
23	PAD FOR GUIDE SUPPORT	4	SA 240. GR 316	5 THK. x 175 W x 300 LG.	8.40
22	LIFTING LUG	20	IS2062 Gr.E250 BR	16 THK. x 175 W x 185 LG.	40.66
21	PAD FOR LIFTING LUG	20	SA 240. GR 316	5 THK. x 70 W x 220 LG.	6.16
20	INSULATION CLEATS	92	SA 240. GR 316	5 THK. x 40 W x 70 LG.	10.28
19	STUD WITH NUT & WASHER	140	SA193 GR.B7/ SA 194 GR2H (HDG)	M24 x 200 L.	0.00
18	TOP BODY FLANGE	5	SA 105	60 THK x OD. 1365 x ID. 1212	729.2
17	LINER PLATE	5	SA 240. GR 316	3 THK x OD. 1260 x I.D 1200	13.90
16	GASKET	5+10	PTFE	3 THK x OD. 1260 x I.D 1200	0.0
15	LINER PLATE	5	SA 240. GR 316	3 THK x OD. 1260 x I.D 1200	13.9
14	BOTTOM BODY FLANGE	5	SA 105	60 THK x OD. 1365 x ID. 1212	729.2
13	EARTHING BOSS	2	SS 304	ø40 X 50 LG.	0.06
12	WASHER PLATE	12	IS2062 Gr.E250 BR	20 THK. x 80 W x 140 LG.	21.10
11	COMPRESSION GUSSET PLATE	24	IS2062 Gr.E250 BR	12 THK. x 115 W x 190 LG.	59.79
10	COMPRESSION RING	1	IS2062 Gr.E250 BR	25 THK x O.D 1470 x I.D 1223	105.00
9	SKIRT BASE RING	1	IS2062 Gr.E250 BR	35 THK x O.D 1470 x I.D 970	263.30
8	SKIRT SHELL	1	IS2062 Gr.E250 BR	80 THK. x 1905 W x 3801 LG.	568.41
7	SKIRT SHELL	1	SA 240 Gr.316	10 THK. x 250 W x 3801 LG.	76.2
6	BTM. DISHED (10% TORR.)	1	SA 240 Gr.316	5 THK. x ø1420 (BLANK)	63.3
5	TOP DISHED (10% TORR.)	1	SA 240 Gr.316	5 THK. x ø1500 (BLANK)	70.7
4	SHELL PLATE	1	SA 240 Gr.316	5 THK. x 1412 W x 3786 LG.	213.5
3	SHELL PLATE	2	SA 240 Gr.316	5 THK. x 2200 W x 3786 LG.	666.3
2	SHELL PLATE	1	SA 240 Gr.316	5 THK. x 2600 W x 3786 LG.	393.7
1	SHELL PLATE	1	SA 240 Gr.316	5 THK. x 2800 W x 3786 LG.	412.8

DRAWING RELEASE PARTICULARS

REV	DESCRIPTION	DRAWN	CHECKED	APPROVED	DATE
2	DRG. REVISED AS PER CLIENT COMMENTS	LSP	SBJ	RHB	14/07/2022
1	DRG. REVISED AS PER CLIENT COMMENTS	LSP	SBJ	RHB	23/06/2022
0	DRG. ISSUED FOR CLIENT APPROVAL	LSP	SBJ	RHB	16/04/2022

Chem Dist PROCESS SOLUTIONS
CHEMDIST PROCESS SOLUTIONS PVT. LTD.
PLOT NO.J-174 /1 MIDC BHOSARI,
PUNE - 411 026, MAHARASTRA , INDIA.

CONSULTANT	IPS-MEHTALIA PVT. LTD		
CLIENT:	YELLOW STONE CHEMICAL LTD.MAHAD	SO NO.:	634
PURCHASE ORDER NO. :	8100001294	DATE :	05/04/2022
MANUFACTURER SERIAL NO	CDPS-634-C1878-2022		
DRN : LSP	TITLE :	PROJECT:	-
CHD. : SBJ		DOC NO.:	C-00001-P001-MDS-C-02-R0
APPD. : RHB	GA DRAWING FOR	REF.DRG.NO.:	-
DATE : 16/04/2022	RECOVERY COLUMN	SIZE :	A1
SCALE : 1:15	TAG NO. C-1102	SHEET :	1 OF 1
MAT. : SS316+MS		REV. :	2
QTY : 1 No.		DRG.NO.:	CDPS-SD-634-DR-C-1102-001

Format: (Size - A0)