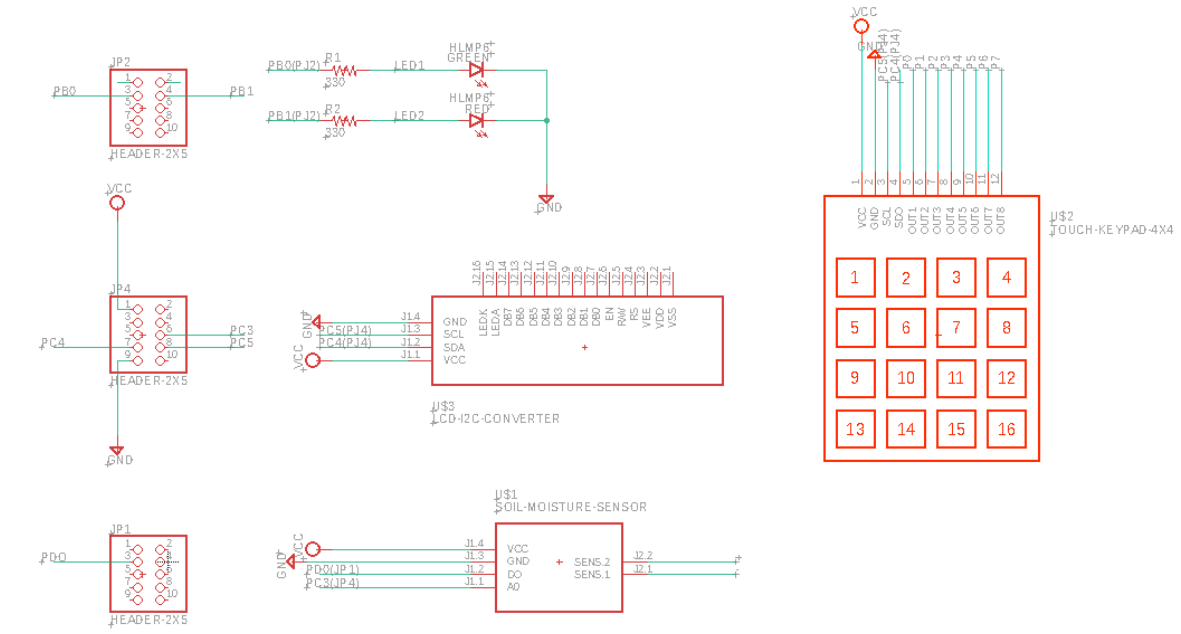
JP2
HEADER-2X5
PB0
PB1
PB0(PJ2)
PB1(PJ2)
R1
R2
330
LED1
LED2
HLMP6
GREEN
RED
GND
VCC
JP4
PC4
PC3
PC5
PC5(PJ4)
PC4(PJ4)
U$3
LCD-I2C-CONVERTER
U$2
TOUCH-KEYPAD-4X4
JP1
PD0
PD0(JP1)
PC3(JP4)
U$1
SOIL-MOISTURE-SENSOR
SEN5.2
SEN5.1

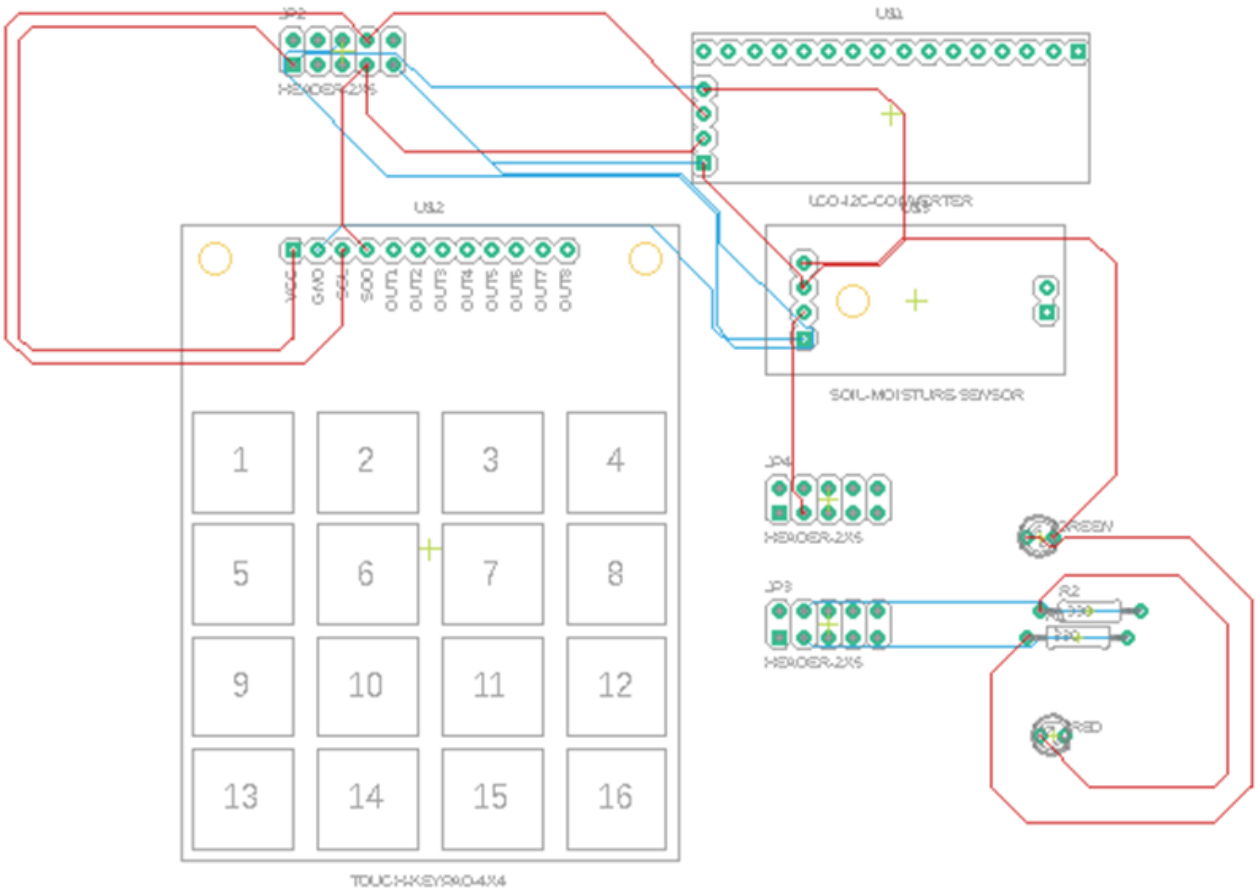
JP2
HEADER-2X5
U$1
LCD-I2C-CONVERTER
U$2
TOUCH-KEYPAD-4X4
SOIL-MOISTURE-SENSOR
JP4
HEADER-2X5
JP3
HEADER-2X5
GREEN
RED
R2