(U) portionmarkdown Example Output

Figure is CUI

```
if __name__ == "__main__":
    hello()
```

Figure is CUI

Figure is TOP SECRET//ACCM-EXAMPLE

```
def hello():
    print("Example")
```

Figure is TOP SECRET//ACCM-EXAMPLE

(U) Example Table

Table is CUI

Column A	Column B	Column C
Example	Example	Example

Table is CUI

(U) Example Link, Footnote & Line Break

- **(U)** See the portionmarkdown repo[1] for documentation.
- **(U)** This line has a `<br>` line break
  right here in the middle.
- **(U)** Inline `code`, **bold**, and *italic* formatting.

(S//NF) Example Diagram

Figure is SECRET//NOFORN

Figure is SECRET//NOFORN

(U) Example Blockquote

> **(U)** There is a `<pagebreak />` below this blockquote.

Classified by: EXAMPLE Derived from: EXAMPLE Declassify on: EXAMPLE
Controlled by: EXAMPLE Categories: EXAMPLE Distribution: EXAMPLE POC: EXAMPLE

1. (U) https://github.com/portionmarkdown/portionmarkdown

(U) Example Image & Diagrams

Figure is TOP SECRET//ACCM-EXAMPLE

Figure is TOP SECRET//ACCM-EXAMPLE

(S//NF) PlantUML network diagram:

Figure is SECRET//NOFORN

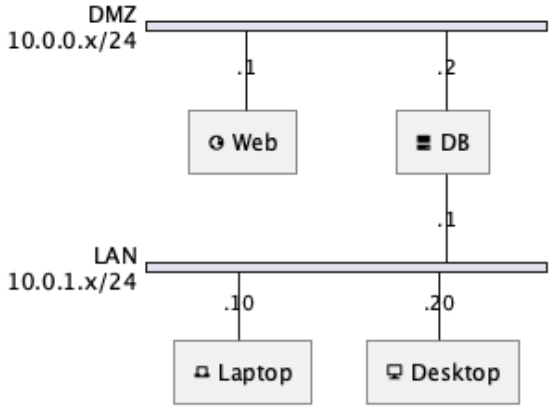

Figure is SECRET//NOFORN

(CUI) Graphviz DAG:

Figure is CUI

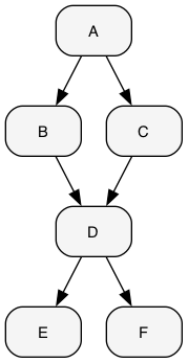

Figure is CUI