USB-C PD

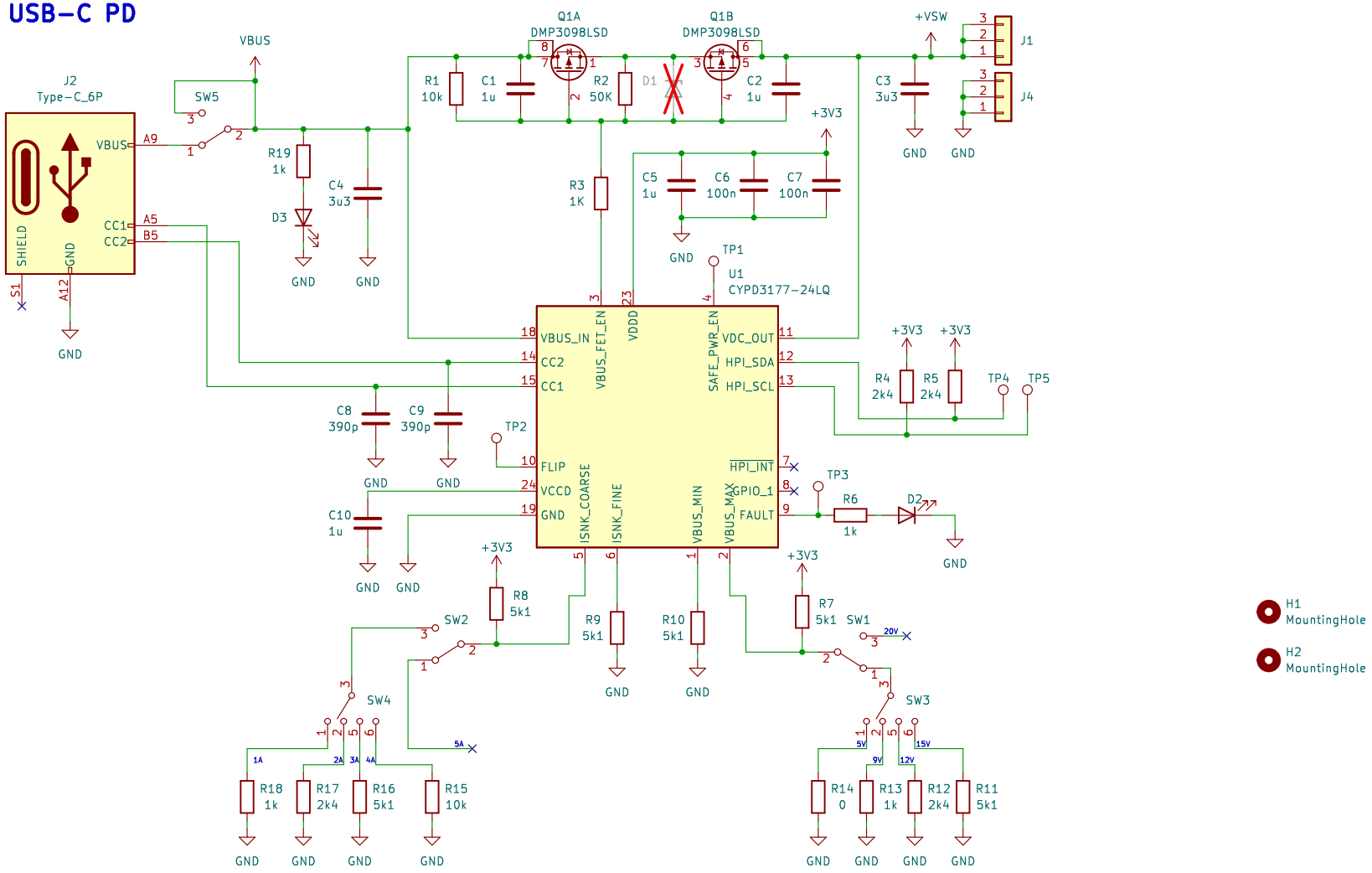

Potpurri

Sheet: /

File: USB-C_PD_Board_V2_CYPD3177.kicad_sch

Title: USB-C Power Delivery Board

Size: A4	Date:	**Rev: V2.0**
KiCad E.D.A. kicad 7.0.8		Id: 1/1