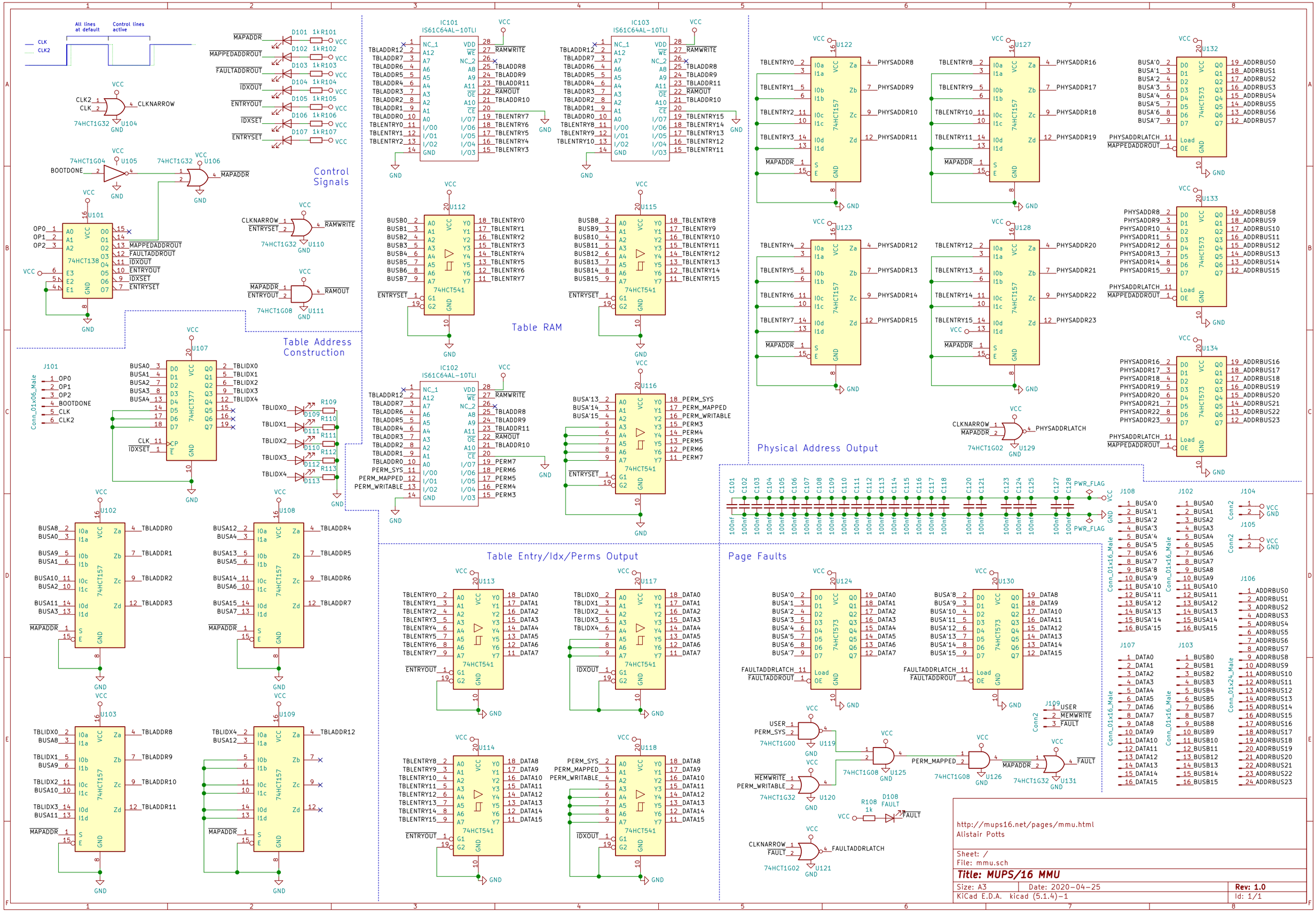
Control Signals
Table Address Construction
Table RAM
Physical Address Output
Table Entry/Idx/Perms Output
Page Faults
http://mups16.net/pages/mmu.html
Alistair Potts
Sheet: /
File: mmu.sch
Title: MUPS/16 MMU
Size: A3
Date: 2020-04-25
Rev: 1.0
KiCad E.D.A. kicad (5.1.4)-1
Id: 1/1