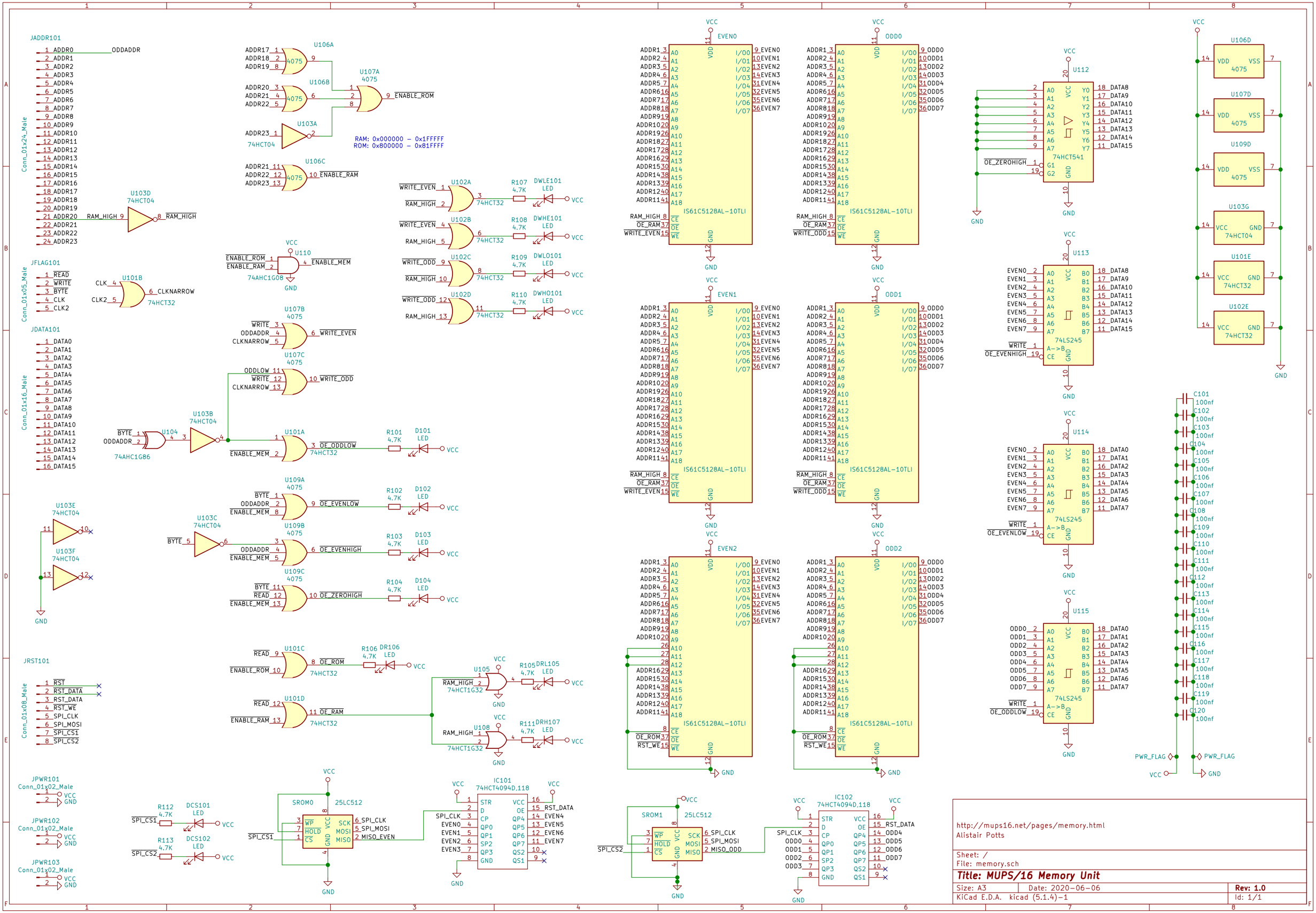

http://mups16.net/pages/memory.html
Alistair Potts

Sheet: /
File: memory.sch

Title: MUPS/16 Memory Unit

Size: A3	Date: 2020-06-06	Rev: 1.0
KiCad E.D.A. kicad (5.1.4)-1		Id: 1/1