Energy Conversion and Management 52 (2011) 738–745

Contents lists available at ScienceDirect

Energy Conversion and Management

journal homepage: www.elsevier.com/locate/enconman

Very short-term wind speed prediction: A new artificial neural network–Markov chain model

S.A. Pourmousavi Kani [a,*], M.M. Ardehali [b]

[a] Electrical and Computer Engineering Department, 627 Cobleigh Hall, Montana State University, Bozeman, MT 59717, USA
[b] Energy Research Center, Department of Electrical Engineering, Amirkabir University of Technology (Tehran Polytechnic), 424 Hafez Ave., Tehran 15914, Iran

ARTICLE INFO

Article history:
Received 8 December 2009
Accepted 30 July 2010
Available online 21 August 2010

Keywords:
Artificial neural network
Markov chain approach
Very short-term prediction
Wind speed prediction

ABSTRACT

As the objective of this study, artificial neural network (ANN) and Markov chain (MC) are used to develop a new ANN–MC model for forecasting wind speed in very short-term time scale. For prediction of very short-term wind speed in a few seconds in the future, data patterns for short-term (about an hour) and very short-term (about minutes or seconds) recorded prior to current time are considered. In this study, the short-term patterns in wind speed data are captured by ANN and the long-term patterns are considered utilizing MC approach and four neighborhood indices. The results are validated and the effectiveness of the new ANN–MC model is demonstrated. It is found that the prediction errors can be decreased, while the uncertainty of the predictions and calculation time are reduced.

© 2010 Elsevier Ltd. All rights reserved.

1. Introduction

The contribution of wind power in market-driven power systems together with the uncertain nature of wind have led to research on models to predict future wind speed/power production. Accurate very short-term wind speed/power prediction can reduce voltage and frequency fluctuations due to variation in wind power and unacceptable shocks in the conventional power units caused by a sudden cut-off of wind power resulting from excessive wind speeds [1,2]. Also, in control systems of a wind turbine, the importance of short-term decisions such as connecting a load, changing the pitch of the blades and other control actions involving delays prompt the need for very short-term wind speed prediction [3–5].

Further, in large modern wind turbines with high investment costs, it is important for a generation company to extract maximum available energy from wind speed and application of different control algorithms for different operational regimes often become necessary. It has been shown that the model predictive control (MPC) is an effective algorithm that can be used to control wind turbines in all the operational regimes and it is constructed based on past measurements and computed future inputs [6]. Therefore, it is anticipated that very short-term wind speed prediction will find a wide range of applications, when MPC is utilized. In a study, a pitch controlled technique is proposed for grid-connected wind turbine in a small power system [7]. The proposed pitch controller in that study, incorporated with very short-term wind speed prediction, is applied to minimize the effects on the power system, while producing optimum wind-generated power. In another study, an operational optimization strategy is introduced at the wind park control level [8], where very short-term wind speed forecasts are known for individual wind turbines. The noted operational strategy is developed with a concern to the minimization of the connection/disconnection changes of the individual wind generators, for a given time horizon.

The short-term wind speed prediction models can be generally subdivided into two main groups, depending on the underlying prediction algorithm used. The first category is based on numerical weather prediction (NWP) models, similar to those used by national meteorological agencies, or other alternative approaches [9,10]. The second category encompasses, among others, artificial intelligence (AI) (fuzzy logic [11–13], artificial neural networks (ANN) [2,5,14–23]) and statistical models [1,4,12,19,24–27]. Also, some post-processing approaches based on statistical models are introduced as a hybrid algorithm in conjunction with NWP models [9,10,12,21]. While the NWP-based models being usually the best option for longer term predictions (over days, weeks and months ahead), AI and statistical approaches are the most promising models [19,28], when short-term and its subclasses time horizons (over around seconds, minutes and few hours ahead) predictions are used [19,28]. For statistical approaches, it has been determined that they have deficiencies in very short-term wind speed prediction [1,12]. First, most of statistical approaches assume that the wind speed data is normally distributed. However, it is a well known characteristic of general wind speed series that its variation

* Corresponding author. Tel.: +1 406 994 5965, mobile: +1 406 548 1969.
E-mail addresses: s.pourmousavikani@msu.montana.edu (S.A. Pourmousavi Kani), ardehali@aut.ac.ir (M.M. Ardehali).

0196-8904/$ - see front matter © 2010 Elsevier Ltd. All rights reserved.
doi:10.1016/j.enconman.2010.07.053

Nomenclature

v^i_{t-k}	preceding wind speed data at the time $t-k$, m/s
$v(t+k\|t)$	predicted wind speed for $t+k$, m/s
i	indication of the ith vector of pattern used in ANN-1
$v_{t-1}, v_{t-2}, \ldots, v_{t-n}$	actual wind speed data which are used to form TPM by MC, m/s
$e(t+k\|t)$	model error, m/s
$v(t+k)$	measured wind speed at time $t+k$, m/s
$\widehat{v}(t+k\|t)$	wind speed prediction for time $t+k$ computed at time t, m/s
k	prediction horizon, s
$\widehat{\mu}_e(k)$	mean of the errors, m/s
$\widehat{\sigma}_e(k)$	standard deviation of the errors, m/s
$\widehat{\upsilon}_e(k)$	skewness factor
$\widehat{\kappa}_e(k)$	kurtosis factor

Acronyms

MC	Markov chain
ANN	artificial neural network
MPC	model predictive control
NWP	numerical weather prediction
AI	artificial intelligence
MLP	multi-layer perceptron
FNI	forward neighborhood index
BNI	backward neighborhood index
ANN-1	first ANN for primary prediction
ANN-2	second ANN for final prediction
TPM	transition probability matrix
TP	transition probability

at a given site can be modeled using the Weibull distribution, which is not a normally distributed function and as a result, a transformation of the original wind speed data is required making the time series unstable and difficult to predict [1]. Second, the highly unstable and variable nature of wind speed series, particularly for very short-term prediction time horizon, needs more complex functions between input and output data to estimate the relations, in spite of simple linear functions used in Bayesian or linear prediction models. The AI-based models have attracted more attention from researchers for accurate wind speed prediction especially for short-term and very short-term prediction horizons. The AI-based models have also been determined to be more accurate as compared to traditional statistical models [2,11,12,17].

The majority of studies based on AI in wind speed prediction focus on short-term prediction horizon [14–23]. Also, different parameters such as wind speed data, relative humidity, and generation hour have been applied in these studies as input variables. Most of these studies utilize various AI-based approaches as hybrid models [5,10–13]. The very short-term wind speed prediction has been considered in the following studies. Riahy and Abedi [4] utilizes the linear prediction model in conjunction with filtering of the wind speed waveform as a new model for short-term wind speed forecasting. The proposed approach is fast and feasible for on-line use but it is not accurate enough according to the reported results. Safavieh et al. [20] proposed a new integrated model utilizing wavelet-based networks and particle swarm optimization to predict very short-term wind speed prediction. The noted hybrid model is efficient but requires an extensive CPU time for the optimization algorithm and it cannot be used for on-line applications. Pourmousavi et al. [21] developed a new model for very short-term wind speed prediction utilizing ANN, Markov chain (MC), and linear regression. The proposed model utilized ANN for primary wind speed prediction. Then, second-order MC is applied to calculate transition probability matrix (TPM) for primary predicted values. Finally, a linear regression among primary predictions and probability values obtained by MC are used toward final prediction. The MC is applied to modify predicted values according to long-term pattern in wind data. The noted model is time consuming because of extensive number of ANN input and training data [21]. Also, linear regression is found unsatisfactory for modifying primary results [21]. Hocaoğlu et al. [24] proposed a new method for hourly wind speed data prediction using Mycielski approach. The Mycielski algorithm performs a prediction using the total exact history of the data samples. The basic idea of the algorithm is to search for the longest suffix string at the end of the data sequence which had been repeated at least once in the history of the sequence [24]. Because of the slow variations and cyclic patterns, the Mycielski predictor provided good prediction results in the sense that the prediction outputs and actual recordings match well with small prediction error. The model is tested on hourly data measured from the Kayseri, Izmir and Antalya regions of Turkey [24]. The model provided good prediction results in the sense that the prediction outputs and actual recordings match well with small prediction error (RMSE around 1.5 for different case studies).

The application of an ANN, as a wind speed model, without combined use of statistical or AI models, demands an increased number of input variables for both training and utilization [1–2], as both short-term and long-term trends have to be made available. Further, as pointed out by Yin [29], there are also two limitations on the use of ANN models that seriously degrade the prediction performance, namely, over-training and extrapolation. Over-training occurs when the capacity of the ANN for training is too great, because it is too large or is allowed too many training iterations. Therefore, applying ANN alone for prediction may increase the possibility of over-training because of large number of input variables and training data sets. For extrapolation, the benefits of ANNs are not realized when they are needed to perform estimation beyond available experimental data [29]. As the objective of this study, a new ANN–MC model is developed for forecasting wind speed in very short-term time scale. For prediction of very short-term wind speed in a few seconds in the future, data patterns for short-term (about an hour) and very short-term (about minutes or seconds) recorded prior to current time are considered.

Next, in Section 2, the proposed ANN–MC model configuration and procedure for implementation are discussed. The details of error criteria are given in Section 3. Section 4 presents the results and validation. In the last section, conclusions are given.

2. Proposed ANN–MC model

In this study, MC approach is applied to capture long-term trends in wind speed data and, as a result, a simple structure for ANN with minimum number of input variables and data sets for training is needed and it is hypothesized that the over-training problem can be avoided. Also, as MC approach memorizes long-term behavior of the signal, the error obtained from extrapolated prediction is reduced. As another solution for extrapolation problem, artificial samples, covering the entire range as much as possible, are drawn based on the existing knowledge about the modeled problem, and then used to initialize the ANN to ensure that most of the future prediction involves interpolation. The outline of the proposed model in this study is shown in Fig. 1.

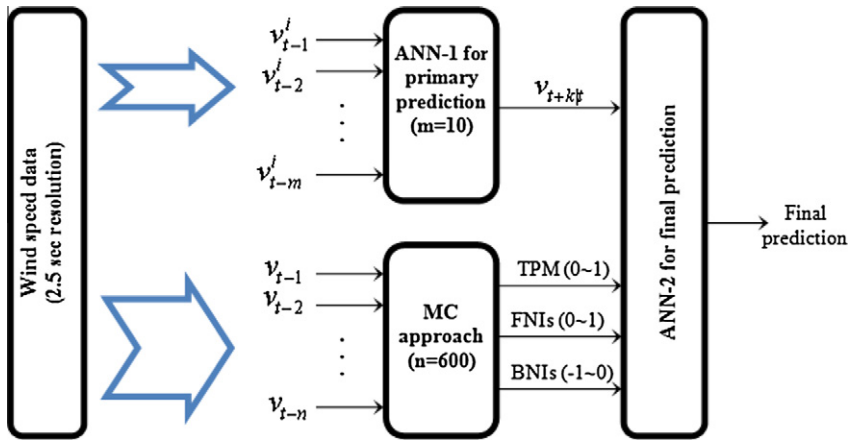

Fig. 1. General outline for the proposed model in this study.

A set of 2.5 s wind speed data for a 175 min period is used for investigating the accuracy of the model for predicting wind speeds up to 7.5 s ahead (total of 4200 wind speed data). In Fig. 1, TPM is transition probabilities matrix for primary prediction, forward neighborhood indices (FNIs) are two upper states and their corresponding probabilities, backward neighborhood indices (BNIs) are two lower states and their corresponding probabilities, v^i_{t-k} is the preceding wind speed data at the time $t-k$, $\widehat{v}(t+k|t)$ is the predicted wind speed for $t+k$, and i represents an indication of the ith vector of pattern used in ANN-1. Also, $v_{t-1}, v_{t-2}, \ldots, v_{t-n}$ are the actual wind speed data which are used to form TPM by MC.

In the proposed model of this study, two ANNs are utilized. The first ANN (ANN-1) is used for primary prediction and capturing short-term trend in wind speed signal, where 10 actual wind speed data are utilized from t to $t-10$ as input variables. Primary prediction can be carried out for different time horizon by the ANN-1. For training, 30 data sets with 10 measured wind speed in each set are selected. After the primary prediction using ANN-1, TPs for predicted values and other four indices together with primary predictions are fed as input variables to a second ANN (ANN-2). Finally, the constructed model based on two ANNs and MC approach can be used for different time horizon prediction.

2.1. ANN-1 for primary prediction: type and structure

The detail descriptions and applications of ANN with different structure and learning algorithms are reported in literatures [14–23]. In this study, multi-layered perceptron (MLP) is used for ANN-1. This structure is one of the simplest and fastest ANN types used in different studies. ANN-1 used consists of one input layer, one hidden layer, and one output layer. In the output layer, only one neuron is needed, $\widehat{v}(t+k|t)$, where k is the time step and $\widehat{v}$ is the anticipated wind speed at time $t+k$ calculated at time t. Since the number of neurons in each layer influence the speed and stability of network, sensitivity analyses for different number of neurons in input and hidden layers show that the structure for the ANN-1 with the least mean absolute percentage error (MAPE) is 5, 2 and 1 neurons for input, hidden and output layers respectively with 30 training vectors and the learning rate of 0.01–0.08. The error criteria including MAPE and maximum prediction error (MPE) are discussed later.

2.2. MC approach

For the Markov process, the probability of the given condition in the given moment may be deduced from information about the preceding conditions. A MC represents a system of elements moving from one state to another over time. The order of the chain gives the number of time steps in the past influencing the probability distribution of the present state, which can be greater than one. Many natural processes are considered as Markov processes [25]. In fact, the TPM is a tool for describing the MC behavior. Each element of the matrix represents probability of passage from a specific condition to a next state [27]. All MC models are based on the TPMs of various time steps. Most often, a first-order MC implies preservation of statistical parameters and especially the first-order autocorrelation coefficient in the synthetic sequences. In order to calculate the TPM, initially the wind speed variation domain is divided into several states. Such a state categorization is arbitrary depending on the purpose, but here, it is determined with upper and lower limit difference of 0.1 m/s [25].

The MC approach is introduced for short-term wind speed prediction in literature [25–27]. First-order MC approach is applied in [25] for wind speed modeling directly. It is noted in [25] that for short periods, the predicted results are close to the measured values (with MAPE in excess of 12%). Also, in [27], second-order MC approach is utilized for short-term wind speed prediction and the results obtained, in comparison with actual wind speed data, show that the statistical characteristics such as correlation factor are satisfactorily preserved, however, the accuracy of predictions are undesirable (MAPE in excess of 30%). Kantz et al. [25] used MC approach to model turbulent wind speed data. Also, the MC approach is used in hybrid algorithms for very short-term wind speed prediction in conjunction with multi-layer perceptron ANN in [5,21]. In the noted studies, different algorithms such as linear regression are applied for final predictions.

2.2.1. Second-order TPM formation

Initially, the wind speed time series are converted to wind speed states, which contains wind speeds between certain values. In [26] wind speed states are determined according to the average $\bar{V}$ and standard deviation S_v of the available wind speed time series. Based on the visual examination of the histogram of the wind speed data, the wind speed states have been adopted with an upper and lower limit difference of 1 m/s of wind speed in [27]. Such a state categorization may be rather arbitrary depending on the purpose and the actual wind speed data used for verification [27]. In this study, to achieve higher accuracy, categorization with an upper and lower limit difference of 0.1 m/s is considered. Based on state matrix, it is possible to find the number of transition from two preceding states in the sequence of wind speed data to another state at time $t+k$. Finally, the TPM is calculated.

Table 1
Number of observations in each state in comparison with state of actual wind speed data.

Iterations	State of predicted values		FNI-1		FNI-2		BNI-1		BNI-2	
	Number of observations	% of total	Number of observations	% of total	Number of observations	% of total	Number of observations	% of total	Number of observations	% of total
1	72	21.8	51	15.5	21	6.36	84	25.5	46	13.9
2	84	25.5	41	12.4	23	6.97	78	23.6	50	15.2
3	83	25.2	44	13.3	21	6.36	80	24.2	48	14.5
4	82	24.8	48	14.5	22	6.67	78	23.6	43	13
5	79	23.9	46	13.9	22	6.67	78	23.6	48	14.5
Mean	80	24.2	46	13.9	21.8	6.6	79.6	24.1	47	14.2

TPM is formed by 600 preceding wind speed data and the calculated matrix is used for primary predicted values (Fig. 1). First, Markov state for primary predicted values by ANN-1 is calculated for one step ahead. Then, according to TPM, the probability of predicted value in the next step is calculated. This process is carried out for all primary predictions. Notice that predicted values are produced in the previous step by ANN-1. For longer prediction horizon, transition probabilities for two or three steps ahead are necessary. In these cases, the above TPM is multiplied according to the number of time steps in the future.

Primary predicted values and their states, in comparison with actual data states, show that more than 83% of actual data are in the state corresponding to the predicted values or the two upper and two lower states. This survey is carried out for 330 wind speed data points. Primary predictions are calculated for this data set. Then, Markov state for predicted values is computed. Finally, the states of actual values are compared with state of predicted values and other four upper and lower states (FNIs and BNIs). The number of observations in each state is shown in Table 1.

It is observed that there is a logical relation between the states for predicted values in comparison with the states of actual values. The relationships between the primary prediction and the coefficients obtained from MC are difficult to determine. Since ANNs can encode complex and non-linear relations, the ANN-2 is used to capture the relationships between the primary prediction and obtained probabilities. The transition probability of the predicted values' state, transition probabilities toward two next states (FNIs) and transition probabilities toward two backward states (BNIs) are input variables to the ANN-2 in order to achieve higher accuracy of prediction in comparison with primary predicted values. BNIs are negative values between −1 and 0 representing transition probability of lower states; while FNIs are positive values in the range of 0–1. It must be noted that current study is carried out for one step-ahead prediction horizon. However, this fact is true for other prediction horizons. All simulations are repeated five times and the results are shown in Table 1. Note that more than 83% of the state of actual values is located near by the state of predicted values and its neighbors' states. In fact, the predicted values can be improved considering other states in neighboring the state of predicted value. So, BNI and FNI are introduced in this study as input variables to the ANN-2 to improve the predicted values. The results are shown in Fig. 2, where the number of observations in each pre-defined states is displayed.

2.3. ANN-2 for final prediction: type and structure

For final prediction, MLP is used for ANN-2. Number of neurons in input layer is chosen with considerations for calculation time and errors (MAPE and MPE). Since the ANN-2 has six input variables and one output variable, number of neurons in each layer should be in the range of variables [28] and the best structure for the ANN-2 with the least MAPE is determined as 3, 0 and 1 neurons for input, hidden and output layers, respectively, with 10 training vectors and the learning rate of 0.01–0.05.

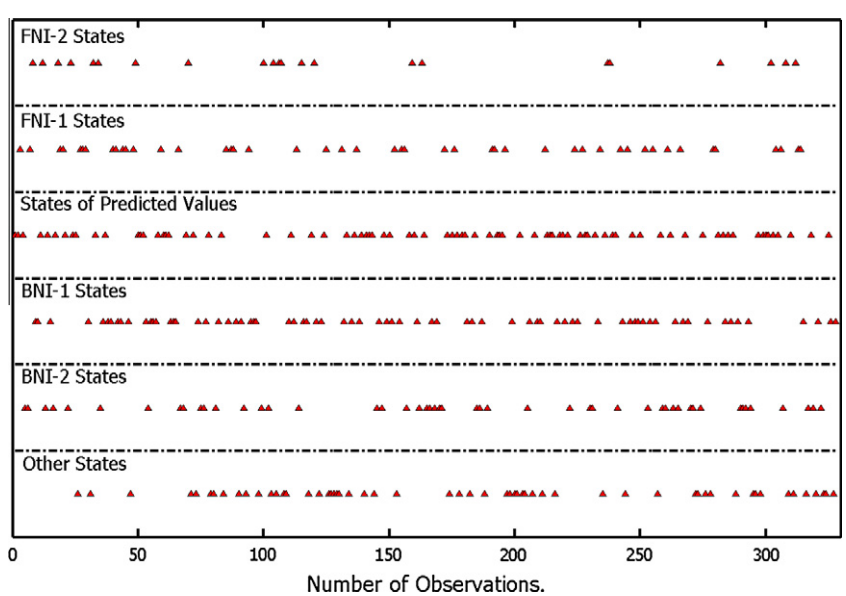

Fig. 2. Number of observations for different neighborhood indices: 6.6% of observation in FNI-2, 13.9% in FNI-1, 24.4% in states of predicted values, 24.1% in BNI-1, 14.2% in BNI-2, and 17% in the other states.

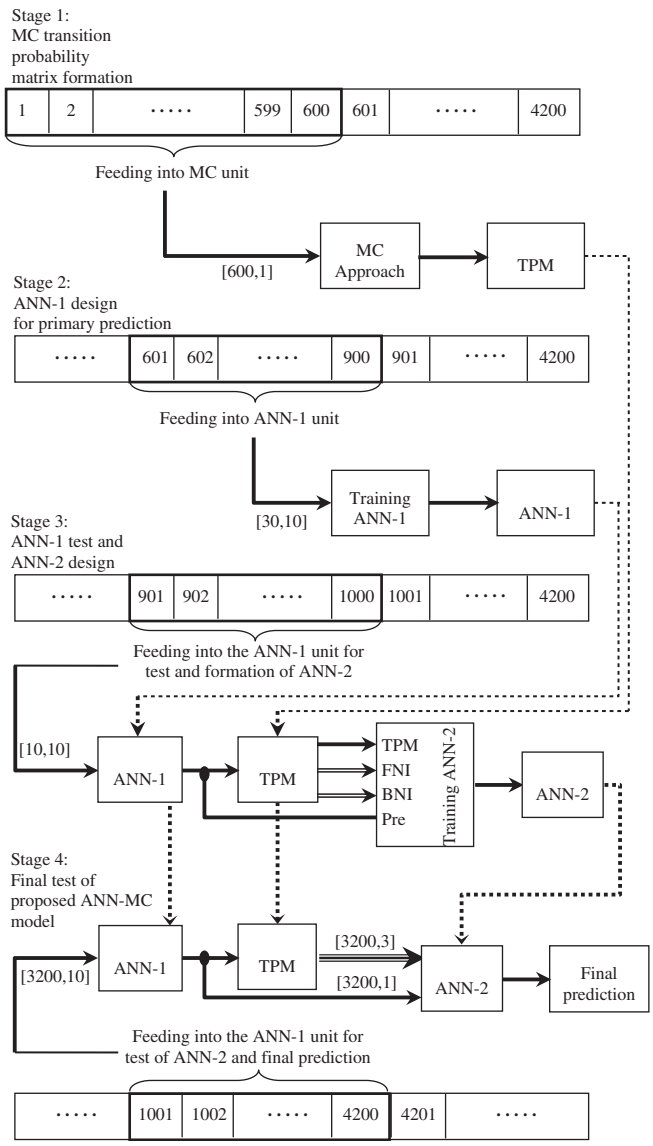

Fig. 3. Flow chart of activities and four stages for implementation of the proposed model in this study.

In Fig. 3, flowchart of the proposed model for final prediction of wind speed is illustrated. Accordingly, the stages to predict very short-term wind speed in different time horizons are as shown.

Stage 1: TPM is calculated based on 600 points of wind speed data.
Stage 2: Another 300 points of wind speed data is applied to design ANN-1 for primary prediction. The structure and type of network is discussed in subsection A.
Stage 3: To test ANN-1 and design the ANN-2, another 100 data set is selected from the remaining data.

According to Fig. 3, the ANN-1 designed in the previous stage is utilized for primary prediction. Then, TPM calculated in stage 1 is applied to calculate the required coefficients. The ANN-2 involves six input variables from primary wind speed prediction, their transition probability values, FNI-1 and FNI-2 from current predicted states and BNI-1 and BNI-2 from current predicted state.

Stage 4: In the last stage, both ANNs and TPM obtained in the previous stages are applied for final prediction.

All above stages must be applied for different prediction time horizons.

3. Error criteria

Determination of which forecasting model yields the most desirable results is of prime concern. In most cases, model performance is determined by examining model accuracy.

The prediction error of a model is classically defined as the difference between the measured and the predicted value. A horizon dependent model error $e(t+k|t)$ is given by [28]:

$$e(t+k|t) = v(t+k) - \widehat{v}(t+k|t) \tag{1}$$

where $v(t+k)$ is the measured wind speed at time $t+k$, $\widehat{v}(t+k|t)$ is the wind speed prediction for time $t+k$ computed at time t. The most commonly used evaluation criterion is the MAPE defined as:

$$\mathrm{MAPE}(k) = \frac{1}{N}\sum_{t=1}^{N}\left(\left|\frac{e(t+k|t)}{v(t+k)}\right| \times 100\right) \tag{2}$$

where $|\cdot|$ denotes the absolute value. Also, k and N represent the prediction horizon and number of prediction respectively. Another criterion called MPE is introduced earlier in this study. In wind turbine control applications, it is important to reduce MPE because a large prediction error may cause an unstable condition for wind turbine resulting from wrong control command. Therefore, a sudden cut-off of wind power due to unstable condition may cause unacceptable shocks in the conventional power units. Since the

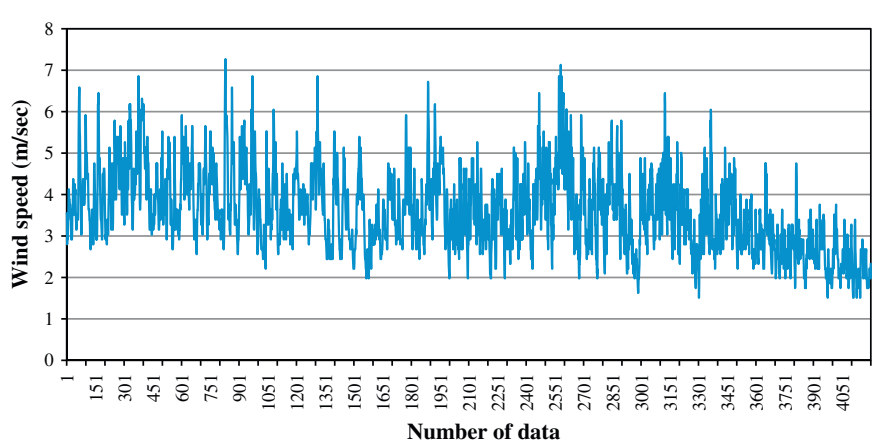

Fig. 4. Actual wind speed data used in this study.

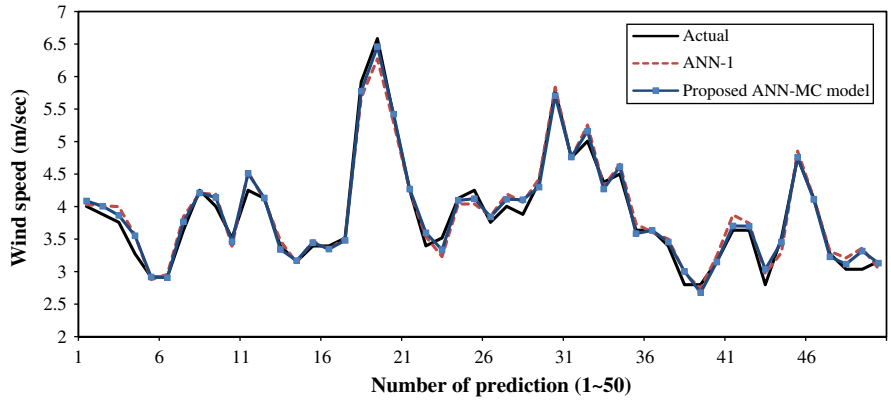

Fig. 5. Comparison of actual wind speed data with predicted values obtained by using ANN-1 and proposed ANN–MC model for one step-ahead prediction.

Table 2
Comparison between different prediction models for multi-step-ahead prediction.

Prediction horizon	ANN-1				Proposed model			
	MAPE	MPE	S^a	K^b	MAPE	MPE	S^a	K^b
$t+2.5$	3.68	22.08	−1.32	2.84	3.14	16.71	−0.96	4.63
$t+5$	9.26	34.67	−1.24	1.24	8.03	30.29	−0.91	1.91
$t+7.5$	12.38	37.09	−1.33	0.79	11.33	35.02	−0.90	1.84
Mean	8.44	31.28	−1.30	1.62	7.50	27.34	−0.92	2.79

[a] Skewness factor.
[b] Kurtosis factor.

prediction is done for a specific number of values with different time steps, MPE(k) is calculated as:

$$\mathrm{MPE}(k) = \max\left\{\left|\frac{e(t+k|t)}{v(t+k)}\right| \times 100\right\}; \quad t = 1,\ldots,N \tag{3}$$

where N is the number of predicted values. As suggested in [28], the skewness and kurtosis permit a distribution-oriented analysis of the forecast error. The skewness can be estimated using Fisher formula [28]:

$$\widehat{\upsilon}_e(k) = \frac{N}{(N-1)(N-2)}\sum_{t=1}^{N}\left(\frac{e(t+k|t)-\widehat{\mu}_e(k)}{\widehat{\sigma}_e(k)}\right)^3 \tag{4}$$

where $\widehat{\mu}_e(k)$ is the mean of the errors and is defined as [28]:

$$\widehat{\mu}_e(k) = \overline{e(k)} = \frac{1}{N}\sum_{t=1}^{N} e(t+k|t) \tag{5}$$

Also, $\widehat{\sigma}_e(k)$ is standard deviation of the errors. It can be computed as [28]:

$$\widehat{\sigma}_e(k) = \sqrt[2]{\frac{1}{N}\sum_{t=1}^{N}\left(e(t+k|t)-\overline{e(k)}\right)^2} \tag{6}$$

The skewness is linked to the third moment of a distribution; it indicates the degree of symmetry of the error distribution. If the skewness is null, then the distribution is symmetrical, if the skewness is negative then the distribution is left-skewed (the left tail of the distribution is the "longest") and, if the skewness is positive, the distribution is right-skewed (the right tail of the distribution is the "longest").

The excess kurtosis defined as [28]:

$$\widehat{\kappa}_e(k) = \frac{N\cdot(N-1)}{(N-1)(N-2)(N-3)}\sum_{t=1}^{N}\left(\frac{e(t+k|t)-\widehat{\mu}_e(k)}{\widehat{\sigma}_e(k)}\right)^4 - \frac{3(N-1)^2}{(N-2)(N-3)} \tag{7}$$

The excess kurtosis is linked to the fourth moment of the distribution. It provides information on the shape of the error distribution with respect to a Gaussian distribution. If the kurtosis is positive, the distribution presents a sharper peak around the mode and longer tails than the Gaussian distribution. Conversely, if the kurtosis is negative the distribution presents a flatter peak around the mode and shorter tails.

4. Results and validation

Prediction of very short-term wind speed on a horizon of seconds is a non-linear and non-stationary stochastic process whose patterns of changes are short-ranged [23]. This random behavior known as turbulence does not exist in wind speed data on a horizon of minutes and hours. In this study, a set of data that extends to 175 min is used for investigating the accuracy of proposed new model for predicting wind speeds up to 7.5 s ahead. Fig. 4 shows actual wind speed data with 2.5 s resolution. The maximum, minimum, mean and standard deviation of wind speed data in Fig. 4 are 7.266, 1.512, 3.904 and 0.9628 m/s, respectively. The highly random short-ranged historical patterns of wind speed data are observed in Fig. 4.

As discussed earlier, a set of 3200 wind speed data is applied from the remaining data for verification purposes of the proposed model. Also, predictions have been carried out for three different time horizons. In Fig. 5, the predicted values for one step-ahead by two models, namely, ANN alone (ANN-1) and the proposed model are shown. Note that primary predictions for longer horizon by ANN-1 are performed by direct network prediction confining to data prior to time t as inputs. For better resolution, the results are divided into 64 ranges and only the first range is shown.

In Table 2, the results are reported and compared with primary results obtained by ANN-1. The values in Table 2 are obtained after 10 runs of the proposed algorithm with three different time horizons. As shown in Table 2, for one step-ahead prediction, MAPE is 3.6821 by ANN-1, whereas for the proposed ANN–MC model, MAPE is reduced to 3.1439 (14.62% improvement). MPE is also

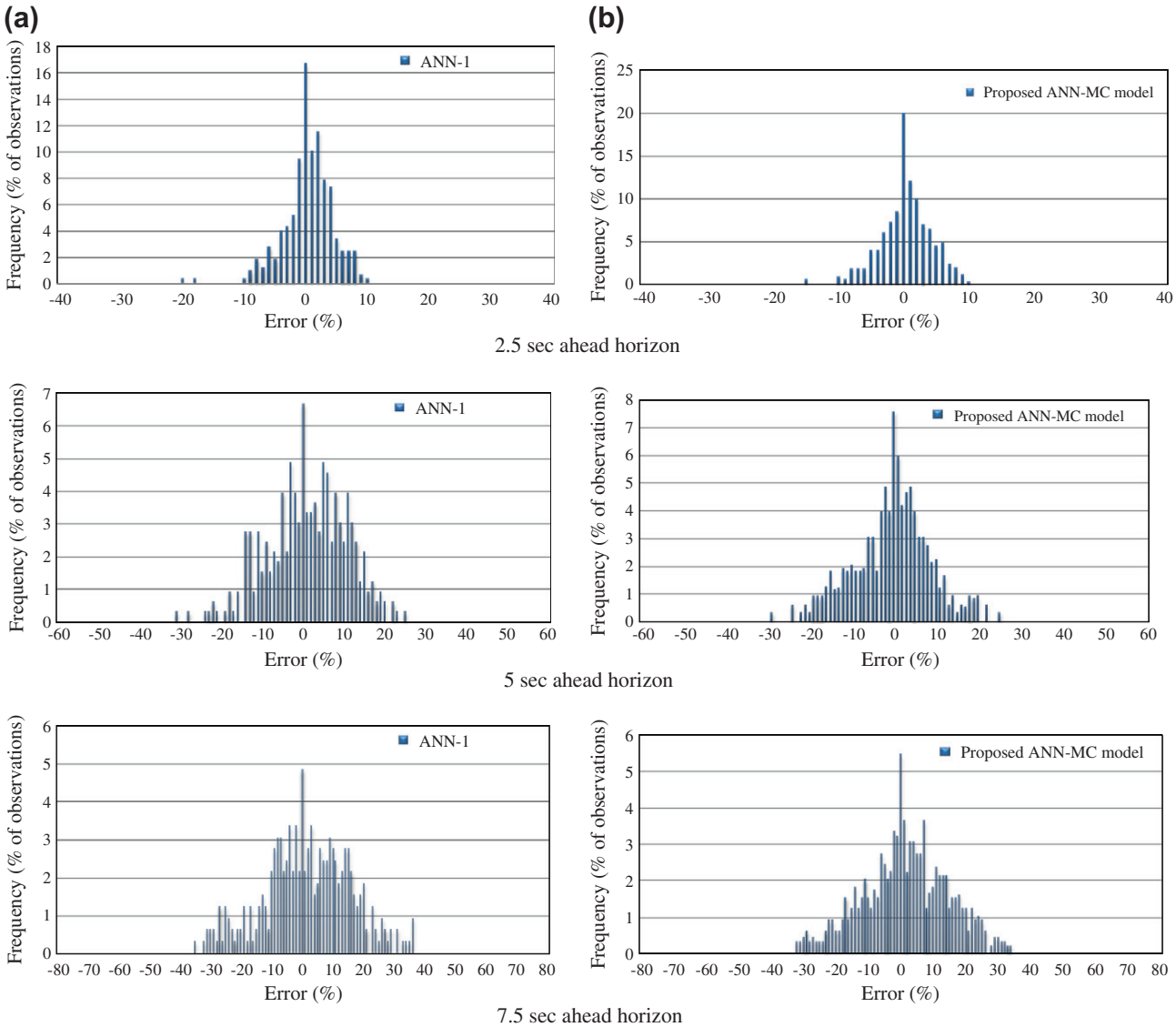

Fig. 6. Error distribution histogram for multi-step-ahead prediction horizon; (a) ANN-1, (b) proposed model.

Table 3
Wind speed prediction errors between ±5%, ±15% and ±30% for both models.

	2.5 s		5 s		7.5 s	
	ANN-1	Proposed ANN–MC model	ANN-1	Proposed ANN–MC model	ANN-1	Proposed ANN–MC model
±5%	76.36	78.18	34.24	39.39	25.45	28.18
±15%	99.39	99.39	82.72	88.72	69.69	73.30
±30%	100	100	99.69	99.69	96.05	94.84
	% of errors in each margin					

reduced considerably in the proposed ANN–MC model particularly for shorter prediction horizon.

Also, skewness in the same prediction horizon for proposed ANN–MC model is −0.9625, while it is −1.3212 for ANN-1 in the same prediction horizon, therefore, it can be concluded that error distribution is more symmetrical for the proposed ANN–MC model. This finding is valid for other prediction horizons (Table 2).

As another criterion, kurtosis coefficient is positive and higher in value for the proposed ANN–MC model. In Fig. 6, the error distributions for the 2.5, 5 and 7.5 s ahead are presented for both errors obtained by primary prediction ANN-1 and the proposed ANN–MC model. All histograms are calculated from 3200 data points. It is shown that the error distribution for the proposed ANN–MC model has a sharper peak around the mode and longer tails with respect to a Gaussian distribution. Therefore, the proposed ANN–MC model leads to a sharper distribution of the errors and lower uncertainty. Also, this finding is valid for other prediction horizons according to Table 2.

While the improvement in error criteria for longer prediction horizons is less than those for lower horizon, the error distribution is more desirable. The lower uncertainty can be determined from analyzing the number of prediction errors inferior to a certain error margin. Table 3 represents the number of predictions between ±5%, ±15% and ±30% error margins for both models.

For example, for the 5 s-ahead horizon, 34.2% of the errors are between ±5% measured values for primary predicted values by the ANN-1, whereas for the proposed ANN–MC model, 39.4% of the errors are in the same error margin for the same horizon. This trend is true for 2.5 s horizon with smaller improvement in the proposed ANN–MC model rather than the other one. It is shown in Table 3 that the proposed ANN–MC model reduces the error for higher margins. Therefore, it is implied that the new model reduces the uncertainty of prediction as well as the prediction errors.

For different prediction horizons, the required time for training of the networks and TPM calculation is less than 2 s by a conventional PC. Also, all models can be trained off-line and the final one can be introduced to the on-line system, which takes minimal time for implementation. Therefore, the required time for final prediction is less than a millisecond. Therefore, it is anticipated that the proposed ANN–MC model has a desired potential for use in on-line applications.

5. Conclusions

Very short-term wind speed model is a necessary tool in wind turbine control applications. In this study, a new ANN–MC model is proposed involving ANN and MC approach. The results show that the proposed ANN–MC model reduces MAPE and MPE as well as uncertainty. Also, the proposed ANN–MC model successfully reduced required time for calculations and it remains feasible to be utilized for on-line applications. In the proposed ANN–MC model, over-training and extrapolation, as the common problems for ANN in prediction applications are successfully avoided. Diminishing MPE verifies the capability of the proposed ANN–MC model to solve over-training and extrapolation problems in ANN.

References

[1] Miranda MS, Dunn RW. One-hour-ahead wind speed prediction using a bayesian methodology. IEEE power engineering society general meeting; 2006.
[2] Wang X, Sideratos G, Hatziargyriou N, Tsoukalas LH. Wind speed forecasting for power system operational planning. In: Proceeding of 8th international conference on probabilistic methods applied to power systems, Iowa State University, Ames, Iowa, September 12–16, 2004.
[3] Riahy G, Freere P. Dynamic wind turbine energy extraction showing the benefits of short term wind prediction, In: Proceedings of the Solar'96 conference, Darwin, Australia, October 1996.
[4] Riahy GH, Abedi M. Short term wind speed forecasting for wind turbine applications using linear prediction method. Renew Energy 2008;33(1):35–41.
[5] Pourmousavi Kani SA, Riahy GH. A new ANN-based methodology for very short-term wind speed prediction using Markov chain approach. In: Proceeding of 8th IEEE annual electrical power and energy conference, Vancouver, BC, Canada, October 6–7, 2008.
[6] Lars Christian Henriksen. Model predictive control of a wind turbine, Information and Mathematical Modeling Technical University of Denmark, 2007.
[7] Nanayakkara N, Nakamura M, Hatazaki H. Predictive control of wind turbines in small power systems at high turbulent wind speeds. Control Eng Pract 1997;5(8):1063–9.
[8] Moyano Carlos F, Pecas Lopes João A. An optimization approach for wind turbine commitment and dispatch in a wind park. Electric Power Syst Res 2009;79(1):71–9.
[9] Louka P, Galanis G, Siebert N, Kariniotakis G, katsafados P, Pytharoulis I, et al. Improvements in wind speed forecasts for wind power prediction purposes using Kalman filtering. J Wind Eng Ind Aerod 2008;96(12):2348–62.
[10] Salcedo-Sanz S, Perez-Bellido AM, Oritz-Garcia EG, Portilla-Figueras A, Prieto L, Paredes D. Hybridizing the fifth generation mesoscale model with artificial neural networks for short-term wind speed prediction. Renew Energy 2009;34(6):1451–7.
[11] Potter C, Negnevitsky M. Very short-term wind forecasting for tasmanian power generation. IEEE Trans Power Syst 2006;21(2):965–72.
[12] Pinson P, Kariniotakis G. On-line assessment of prediction risk for wind power production forecasts. Wind Energy 2004;7(2):119–32.
[13] Monfared M, Rastegar H, Madadi Kojabadi H. A new strategy for wind speed forecasting using artificial intelligent methods. Renew Energy 2009;34(3):845–8.
[14] Li S, Wunsch DC, O'Hair EA, Giesselmann MG. Using neural networks to estimate wind turbine power generation. IEEE Trans Energy Convers 2001;16(3).
[15] Mohandes MA, Halawani TO, Rehman S, Hussain AA. Support vector machines for wind speed prediction. Renew Energy 2004;29(6):939–47.
[16] Flores P, Tapia A, Tapia G. Application of a control algorithm for wind speed prediction and active power generation. Renew Energy 2005;30(4):523–36.
[17] El-Fouly THM, El-Saadany EF, Salama MMA. One day ahead prediction of wind speed using annual trends. IEEE power engineering society general meeting, 2006.
[18] Barbounis TG, Theocharis JB, Alexiadis MC, Dokopoulos PS. Long-term wind speed and power forecasting using local recurrent neural network models. IEEE Trans Energy Convers 2006;21(1):273–84.
[19] Cadenas E, Rivera W. Wind speed forecasting in the south coast of, Oaxaca, Mexico. Renew Energy 2007;32(12):2116–28.
[20] Safavieh E, Jahanbani Ardakani A, Kashefi Laviani A, Pourmousavi SA, Hosseinian SH, Abedi M. A new integrated approach for very short-term wind speed prediction using wavelet networks and PSO. International conference on power systems, Bangalore, India, December 12–14, 2007.
[21] Pourmousavi Kani SA, Mousavi SM, Kashefi Kaviani A, Riahy GH. A new integrated approach for very short-term wind speed prediction using linear regression among ANN and Markov chain. International conference on power system analysis, control and optimization, Andhra Pradesh, India, March 13–15, 2008.
[22] Carolin Mabel M, Fernandez E. Analysis of wind power generation and prediction using ANN: a case study. Renew Energy 2008;33(5):986–92.
[23] Salcedo-Sanz S, Perez-Bellido AM, Oritz-Garcia EG, Portilla-Figueras A, Prieto L, Correoso F. Accurate short-term wind speed prediction by exploiting diversity in input data using banks of artificial neural networks. Neurocomputing 2009;72(4–6):1336–41.
[24] Hocaoğlu Fatih O, Fidan Mehmet, Gere Ömer N. Mycielski approach for wind speed prediction. Energy Convers Manage 2009;50(6):1436–43.
[25] Kantz H, Holstein D, Ragwitz M, Vitanov NK. Markov chain model for turbulent wind speed data. Phys A Stat Mech Appl 2004;342(1–2):315–21.
[26] Sahin AD, Sen Z. First-order Markov chain approach to wind speed modelling. J Wind Eng Ind Aerod 2001;89(3–4):263–9.
[27] Shamshad A, Bawadi MA, Wan Hussin WMA, Majid TA, Sanusi SAM. First and second order Markov chain models for synthetic generation of wind speed time series. Energy 2005;30(August):693–708.
[28] Siebert N. Development of methods for regional wind power forecasting, PhD thesis, Sciences des Métiers de l'Ingénieur; 2008.
[29] Yin C, Rosendahl L, Luo Zh. Methods to improve prediction performance of ANN models. Simulat Model Pract Theory 2003;11(3–4):211–22.