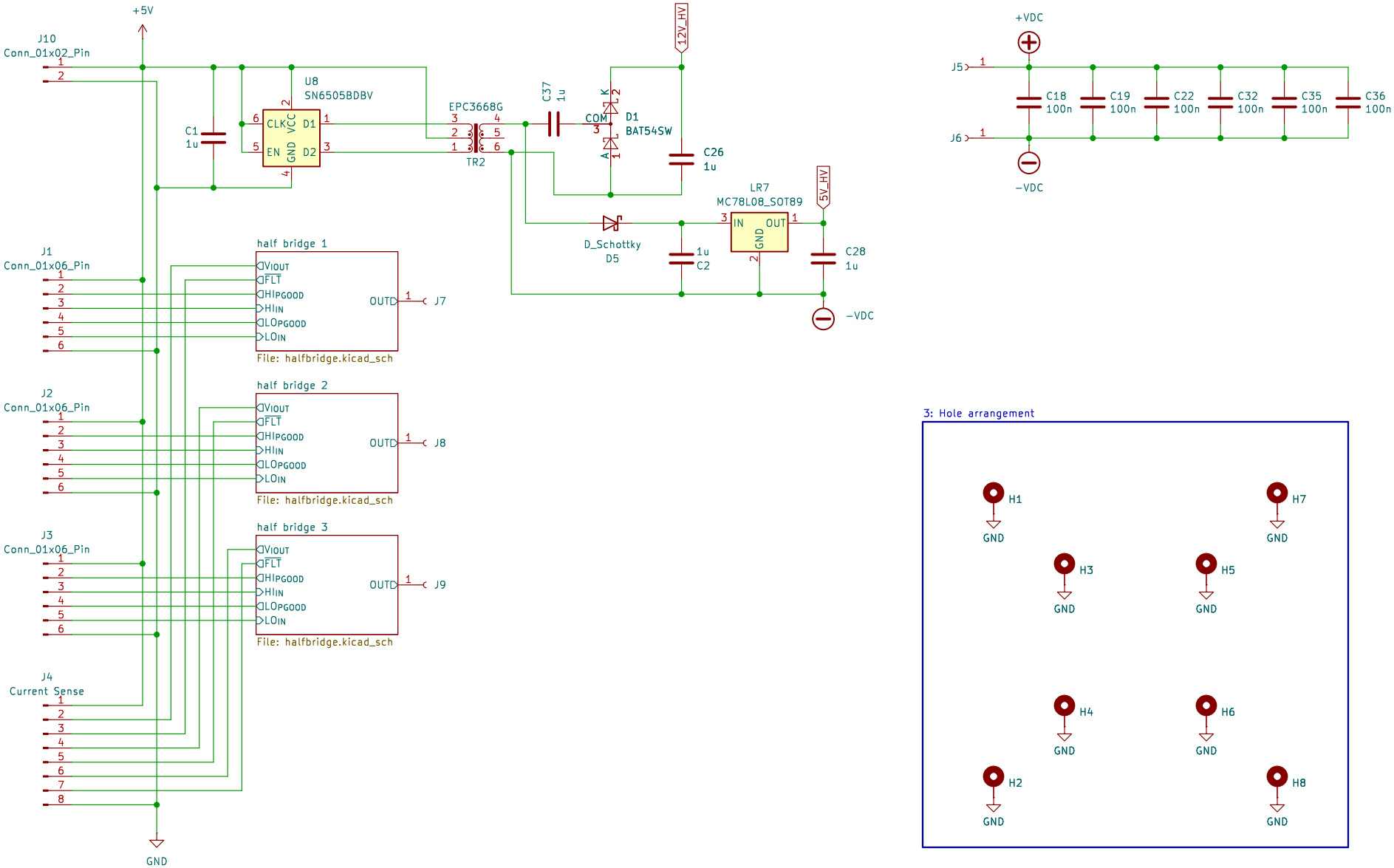

Sheet: /
File: three_half_bridges.kicad_sch

Title:

Size: A	Date:	Rev:
KiCad E.D.A. 8.0.6		Id: 1/4

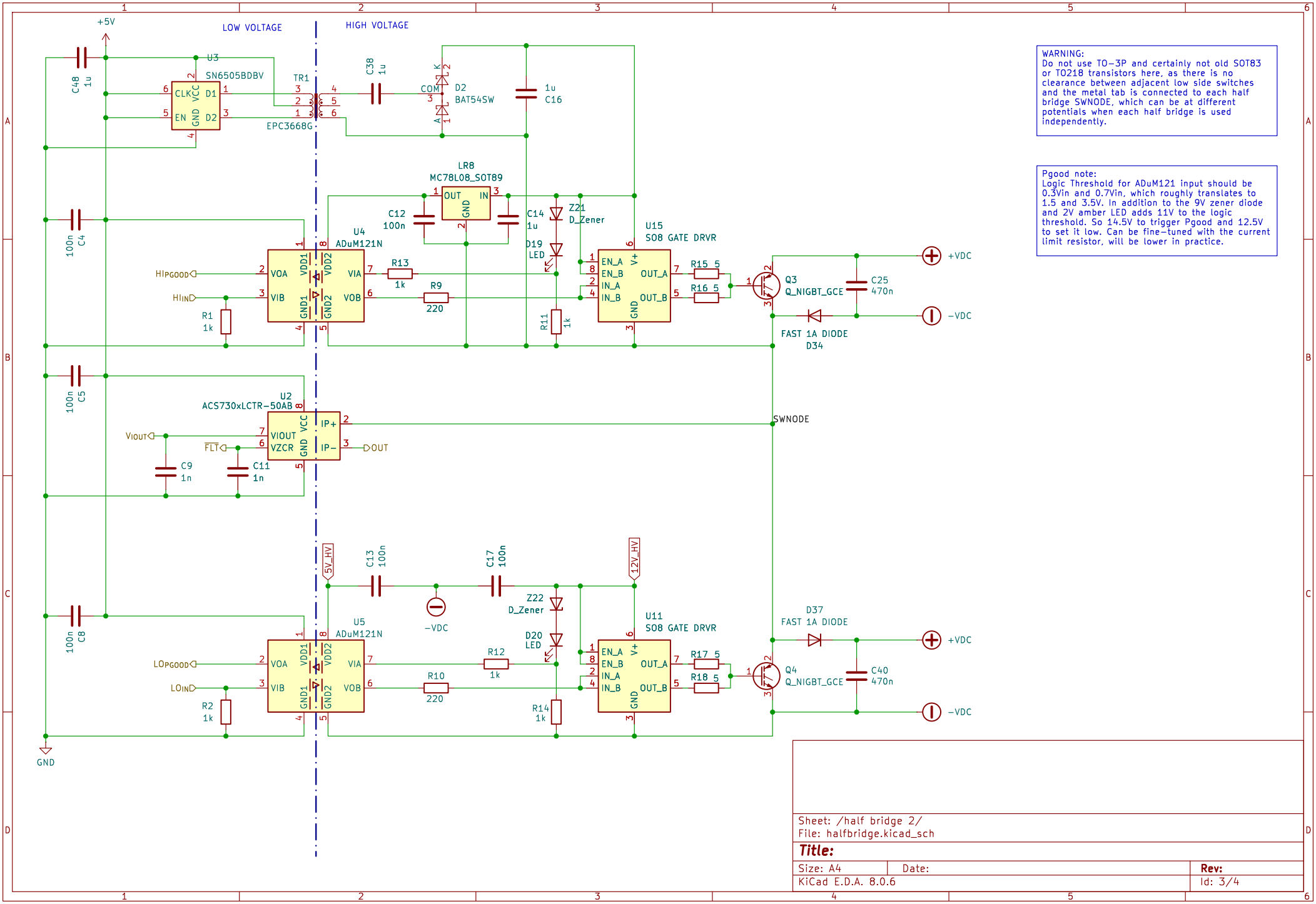

WARNING:
Do not use TO−3P and certainly not old SOT83 or TO218 transistors here, as there is no clearance between adjacent low side switches and the metal tab is connected to each half bridge SWNODE, which can be at different potentials when each half bridge is used independently.

Pgood note:
Logic Threshold for ADuM121 input should be 0.3Vin and 0.7Vin, which roughly translates to 1.5 and 3.5V. In addition to the 9V zener diode and 2V amber LED adds 11V to the logic threshold. So 14.5V to trigger Pgood and 12.5V to set it low. Can be fine−tuned with the current limit resistor, will be lower in practice.

Sheet: /half bridge 2/
File: halfbridge.kicad_sch

Title:

Size: A4	Date:	Rev:
KiCad E.D.A. 8.0.6		Id: 3/4

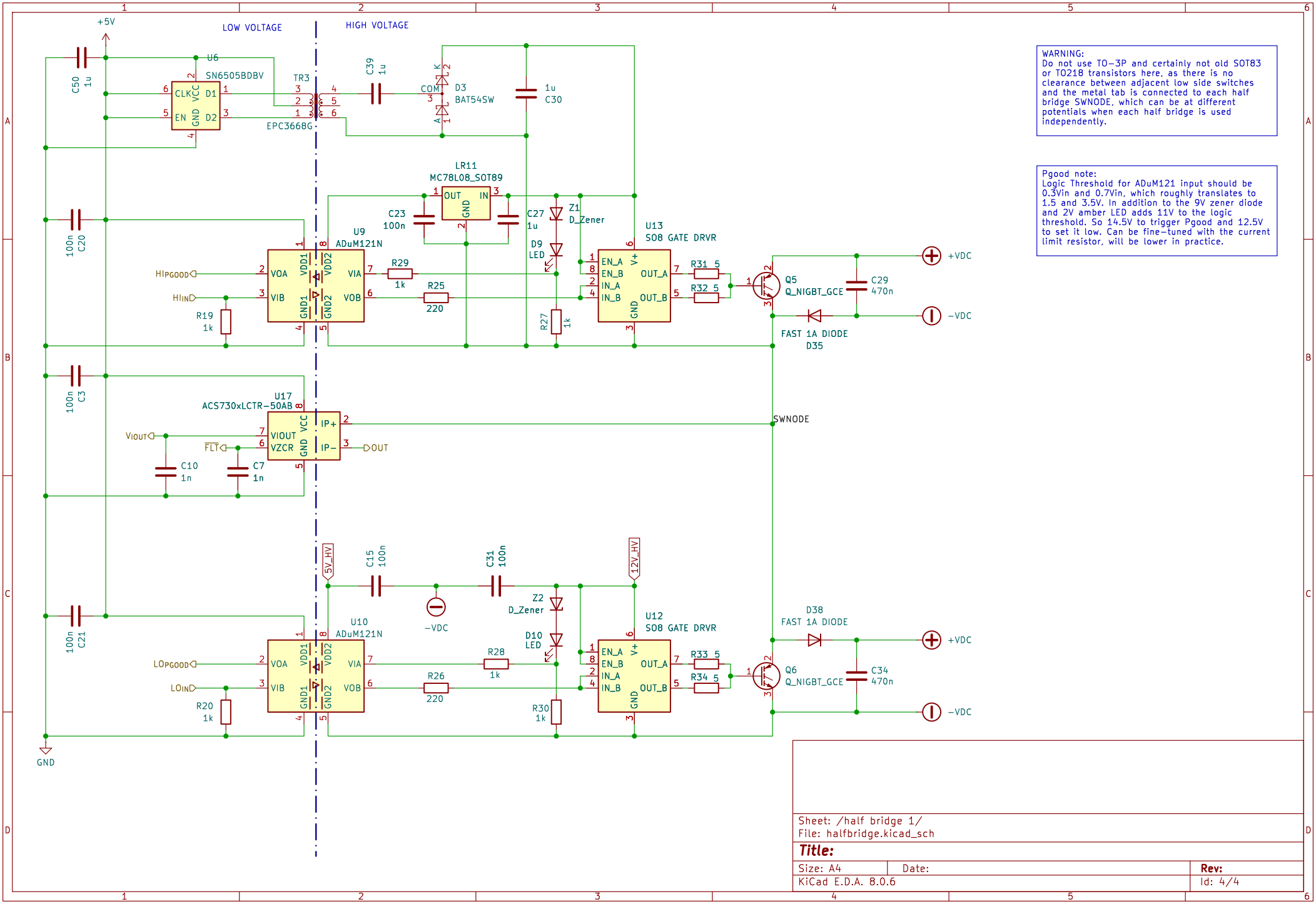

WARNING:
Do not use TO-3P and certainly not old SOT83 or TO218 transistors here, as there is no clearance between adjacent low side switches and the metal tab is connected to each half bridge SWNODE, which can be at different potentials when each half bridge is used independently.

Pgood note:
Logic Threshold for ADuM121 input should be 0.3Vin and 0.7Vin, which roughly translates to 1.5 and 3.5V. In addition to the 9V zener diode and 2V amber LED adds 11V to the logic threshold. So 14.5V to trigger Pgood and 12.5V to set it low. Can be fine-tuned with the current limit resistor, will be lower in practice.

Sheet: /half bridge 1/
File: halfbridge.kicad_sch

Title:

Size: A4	Date:	Rev:
KiCad E.D.A. 8.0.6		Id: 4/4

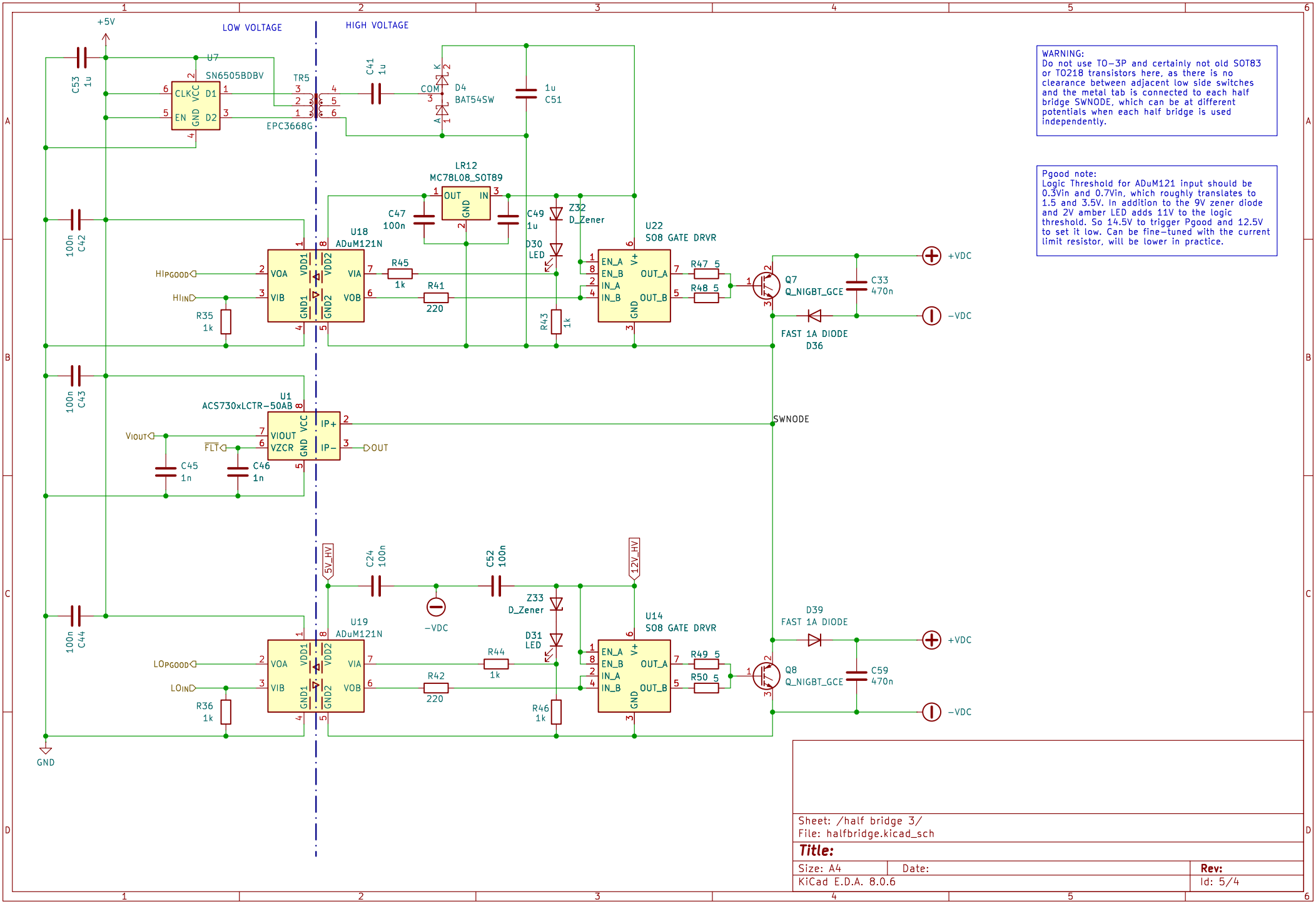

WARNING:
Do not use TO−3P and certainly not old SOT83 or TO218 transistors here, as there is no clearance between adjacent low side switches and the metal tab is connected to each half bridge SWNODE, which can be at different potentials when each half bridge is used independently.

Pgood note:
Logic Threshold for ADuM121 input should be 0.3Vin and 0.7Vin, which roughly translates to 1.5 and 3.5V. In addition to the 9V zener diode and 2V amber LED adds 11V to the logic threshold. So 14.5V to trigger Pgood and 12.5V to set it low. Can be fine−tuned with the current limit resistor, will be lower in practice.

Sheet: /half bridge 3/
File: halfbridge.kicad_sch

Title:

Size: A4	Date:	Rev:
KiCad E.D.A. 8.0.6		Id: 5/4