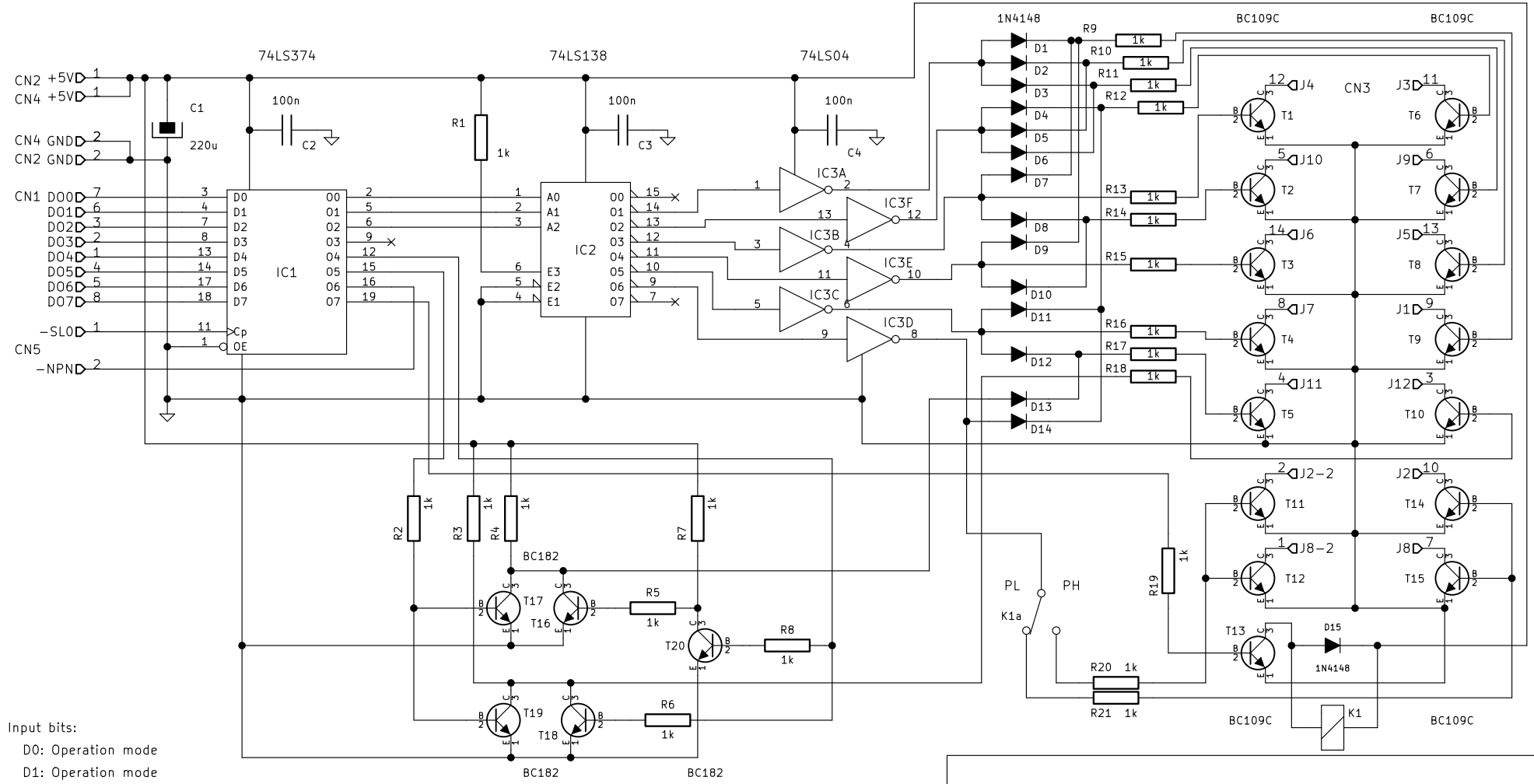

Input bits:

- D0: Operation mode
- D1: Operation mode
- D2: Operation mode
- D3: Unused
- D4: -Ube/Uce
- D5: -EN Uce/Ube
- D6: -NPN/PNP
- D7: -HP

Draw number: CTT/14

Pozsar Zsolt

Sheet: /CTT/SW1/

File: ctt_sw1.sch

Title: CTT Transistor tester - CTT/SW1 Switching unit

Size: A4	Date: 28 jan 2012	**Rev: 1.0**
KiCad E.D.A. kicad 4.0.5+dfsg1-4+deb9u1		Id: 7/11