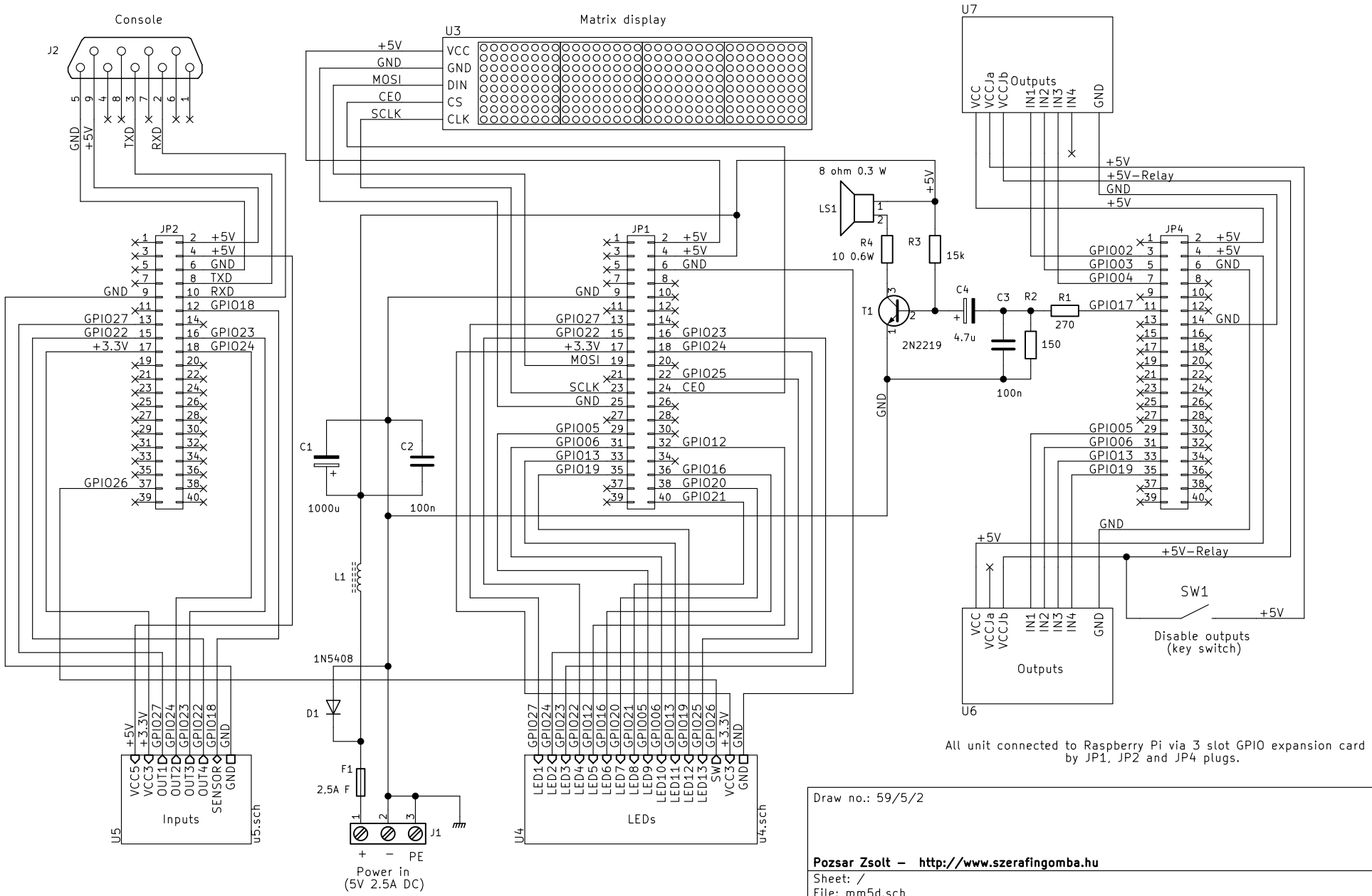

Draw no.: 59/5/2

Pozsar Zsolt – http://www.szerafingomba.hu

Sheet: /
File: mm5d.sch

Title: MM5D controlling and remote monitoring equipment

Size: A4	Date: 2019-11-01	**Rev: 191101**
KiCad E.D.A. kicad 4.0.5+dfsg1-4		Id: 1/3