Computer Z80 MSX compatible.

Flash memory: 64kB
Ram memory..: 32kB
2 RS232
CH376S fat reader

CPU Z80

File: CpuZ80.kicad_sch

Memory

File: Memory.kicad_sch

Interfaces

File: Interfaces.kicad_sch

Connectors

File: Connectors.kicad_sch

Backplane

File: backplane.kicad_sch

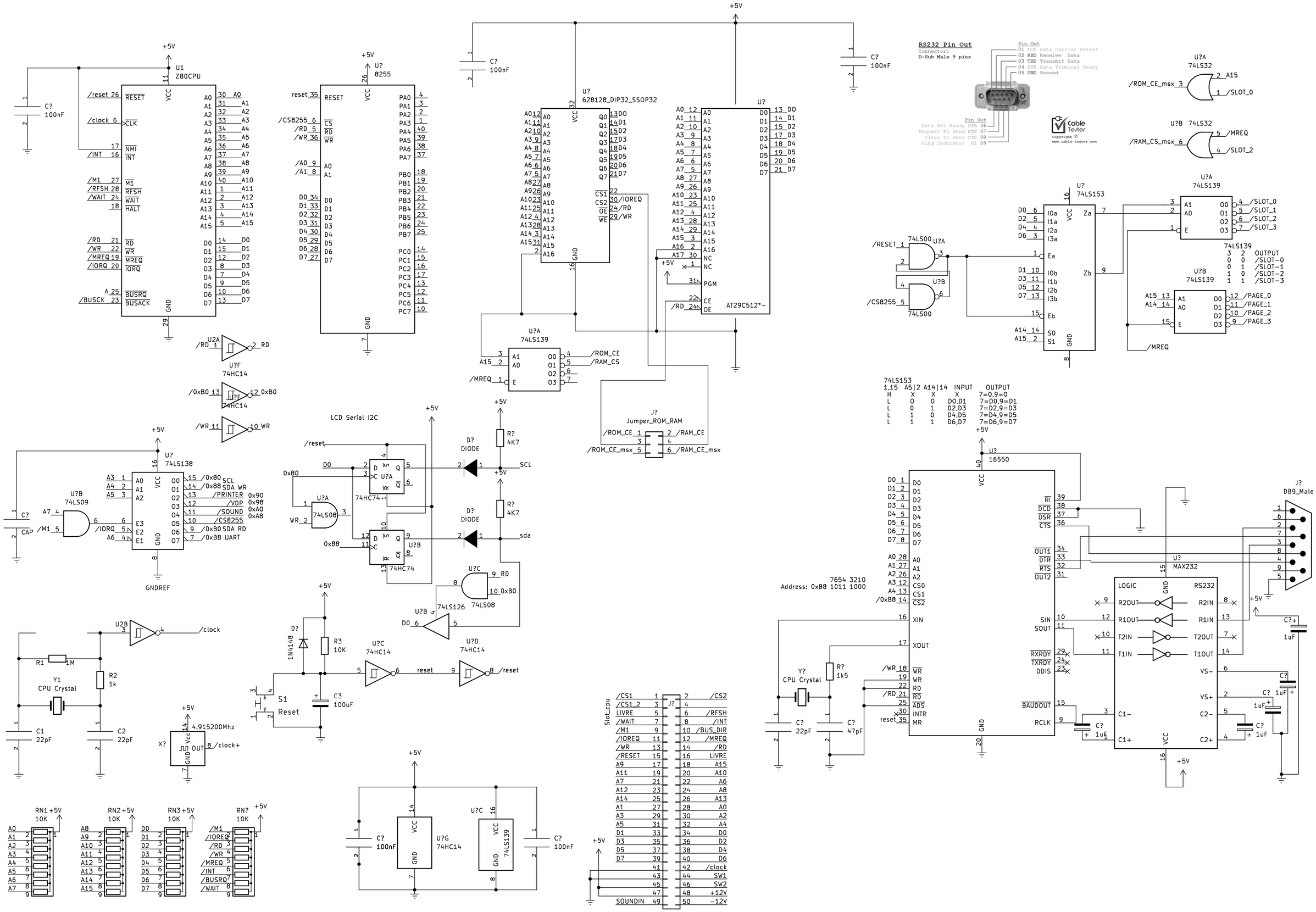

U1
Z80CPU
U?
8255
U?
628128_DIP32_SSOP32
U?
AT29C512*-
U?A
74LS139
U?F
74HC14
U?
74LS138
GNDREF
U?B
74LS09
LCD Serial I2C
U?A
74LS08
U?B
74HC74
U?C
74LS126
U?D
74HC14
U?C
74HC14
U?G
74HC14
U?C
74LS139
Y1
CPU Crystal
X?
4.915200Mhz
S1
Reset
J?
Jumper_ROM_RAM
RS232 Pin Out
Connector:
D-Sub Male 9 pins
Pin Out
01 DCD Data Carrier Detect
02 RXD Receive Data
03 TXD Transmit Data
04 DTR Data Terminal Ready
05 GND Ground
Data Set Ready DSR 06
Request To Send RTS 07
Clear To Send CTS 08
Ring Indicator RI 09
Cable Tester
U?A
74LS32
U?B 74LS32
U?
74LS153
U?A
74LS139
U?B
74LS139
74LS00
74LS00
74LS153
1,15 A5|2 A14|14 INPUT OUTPUT
H X X X 7=0,9=0
L 0 0 D0,D1 7=D0,9=D1
L 0 1 D2,D3 7=D2,9=D3
L 1 0 D4,D5 7=D4,9=D5
L 1 1 D6,D7 7=D6,9=D7
U?
16550
7654 3210
Address: 0xB8 1011 1000
Y?
CPU Crystal
U?
MAX232
LOGIC
RS232
J?
DB9_Male
Slot_cpu
J?

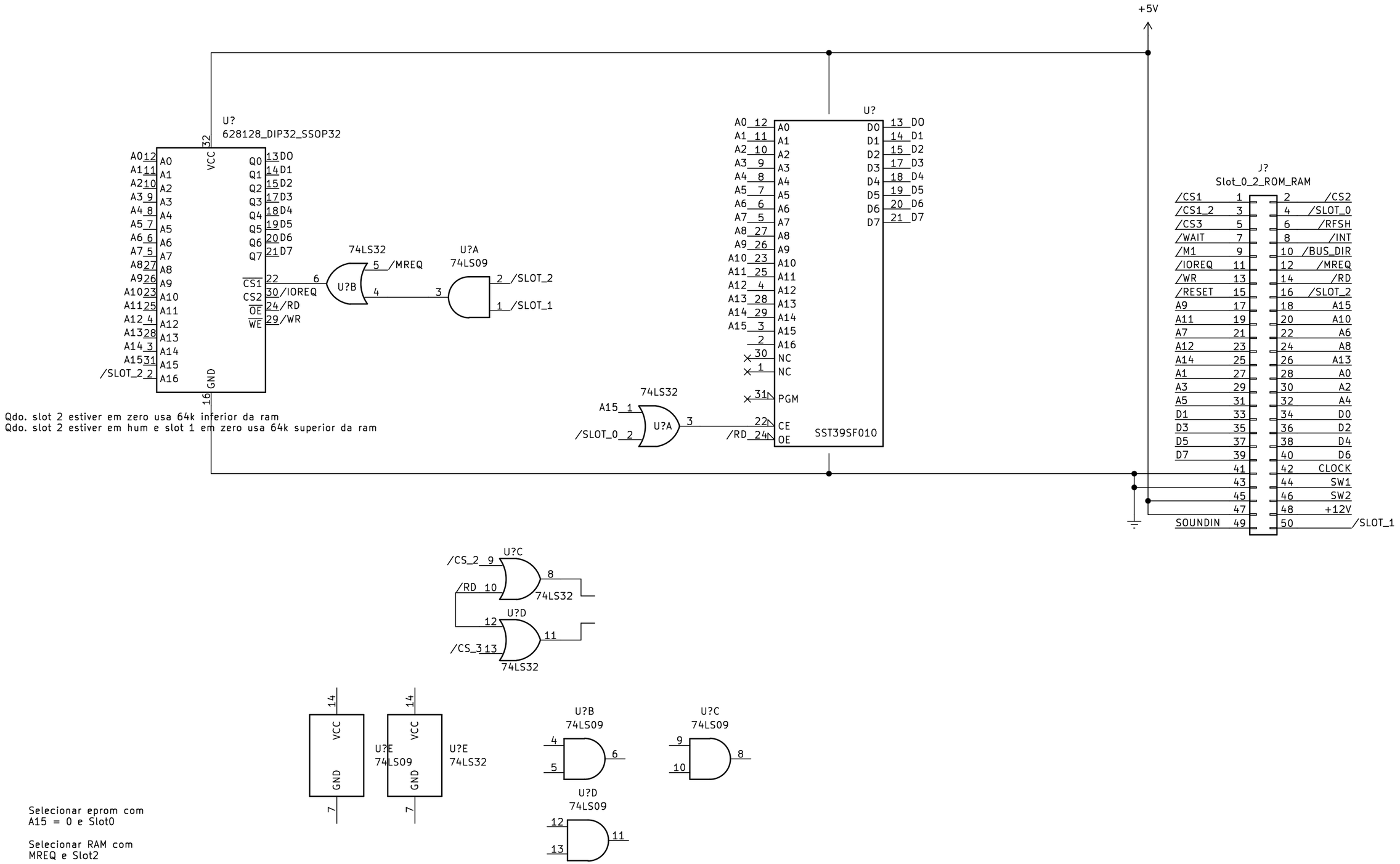
+5V
U?
628128_DIP32_SSOP32
VCC
GND
74LS32
U?B
U?A
74LS09
/MREQ
/IOREQ
/RD
/WR
/SLOT_2
/SLOT_1
U?
SST39SF010
74LS32
U?A
/SLOT_0
J?
Slot_0_2_ROM_RAM
/CS1
/CS1_2
/CS3
/WAIT
/M1
/IOREQ
/WR
/RESET
/CS2
/SLOT_0
/RFSH
/INT
/BUS_DIR
/MREQ
/RD
/SLOT_2
/SLOT_1
SOUNDIN
CLOCK
SW1
SW2
+12V
Qdo. slot 2 estiver em zero usa 64k inferior da ram
Qdo. slot 2 estiver em hum e slot 1 em zero usa 64k superior da ram
U?C
U?D
U?E
Selecionar eprom com
A15 = 0 e Slot0
Selecionar RAM com
MREQ e Slot2

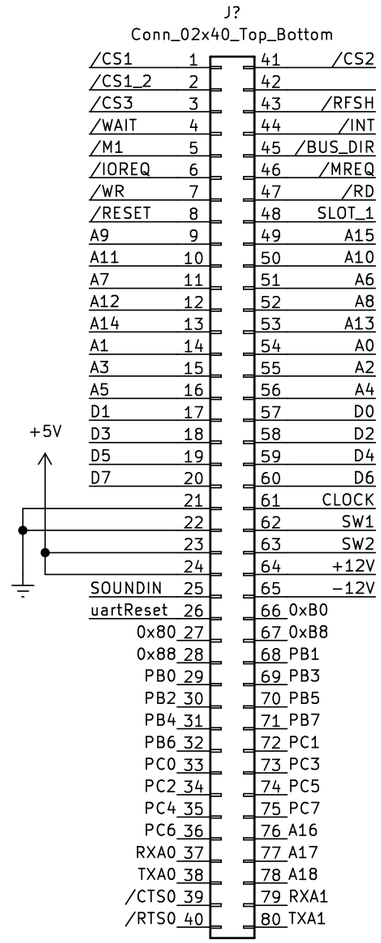
J?
Conn_02x40_Top_Bottom
/CS1 1
/CS1_2 2
/CS3 3
/WAIT 4
/M1 5
/IOREQ 6
/WR 7
/RESET 8
A9 9
A11 10
A7 11
A12 12
A14 13
A1 14
A3 15
A5 16
D1 17
D3 18
D5 19
D7 20
21
22
23
24
SOUNDIN 25
uartReset 26
0x80 27
0x88 28
PB0 29
PB2 30
PB4 31
PB6 32
PC0 33
PC2 34
PC4 35
PC6 36
RXA0 37
TXA0 38
/CTS0 39
/RTS0 40
41 /CS2
42
43 /RFSH
44 /INT
45 /BUS_DIR
46 /MREQ
47 /RD
48 SLOT_1
49 A15
50 A10
51 A6
52 A8
53 A13
54 A0
55 A2
56 A4
57 D0
58 D2
59 D4
60 D6
61 CLOCK
62 SW1
63 SW2
64 +12V
65 −12V
66 0xB0
67 0xB8
68 PB1
69 PB3
70 PB5
71 PB7
72 PC1
73 PC3
74 PC5
75 PC7
76 A16
77 A17
78 A18
79 RXA1
80 TXA1
+5V

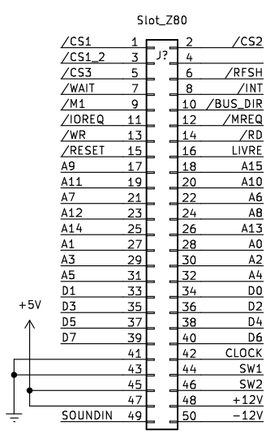

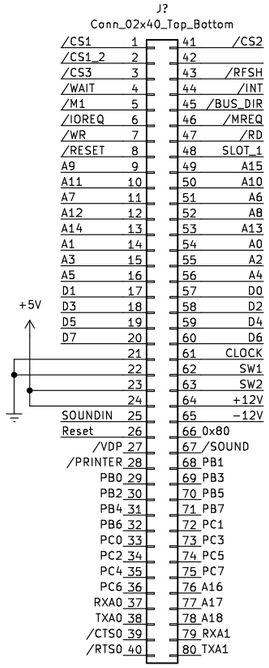

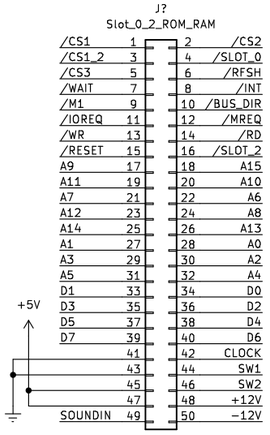

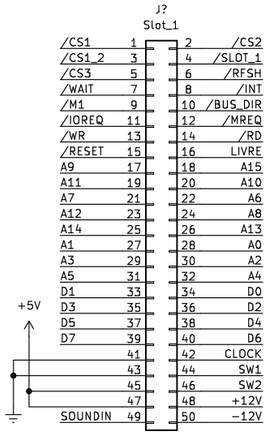

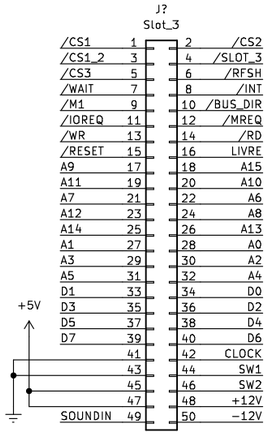

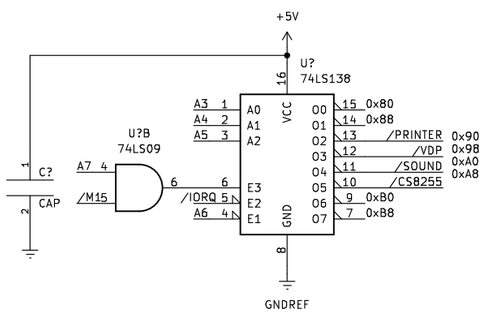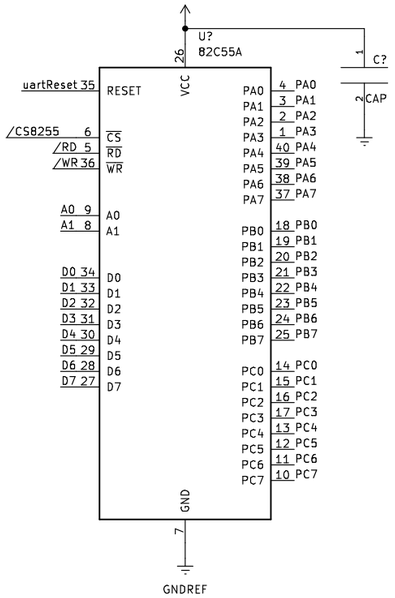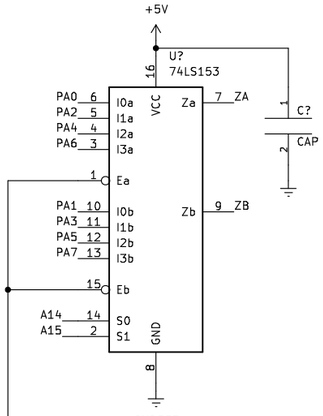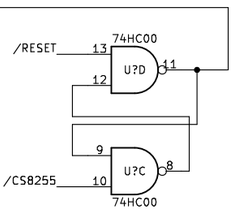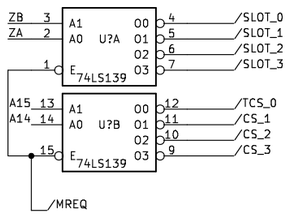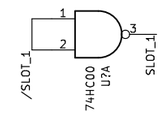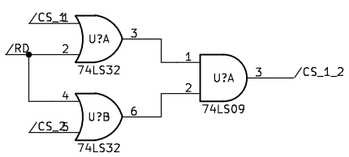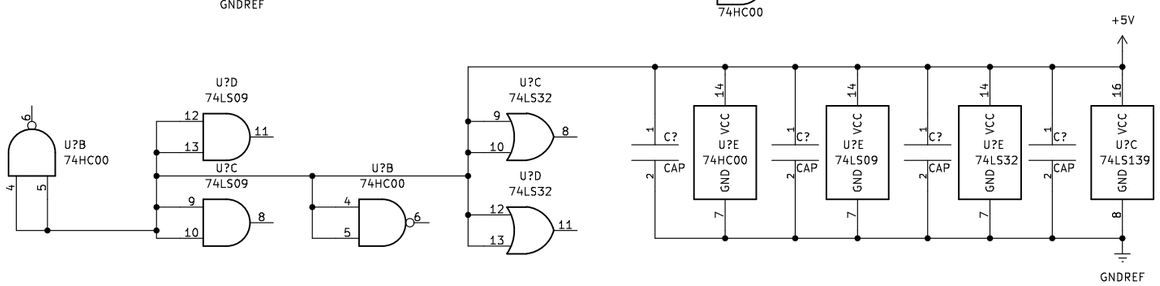
```
1 0 0 0  0 X X X -> 80
a
1 0 0 0  0 1 1 1 -> 87

1 0 0 0  1 X X X => 88
a
1 0 0 0  1 1 1 1 => 8F

1 0 0 1  0 X X X => 90
a
1 0 0 1  0 X X X => 97

1 0 0 1  1 X X X => 98
a
1 0 0 1  1 1 1 1 => 9F

1 0 1 0  0 X X X => A0
a
1 0 1 0  0 X X X => A7

1 0 1 0  1 X X X => A8
a
1 0 1 0  1 1 1 1 => AF

1 0 1 1  0 X X X => B0
a
1 0 1 1  0 X X X => B7

1 0 1 1  1 X X X => B8
a
1 0 1 1  1 1 1 1 => BF
```