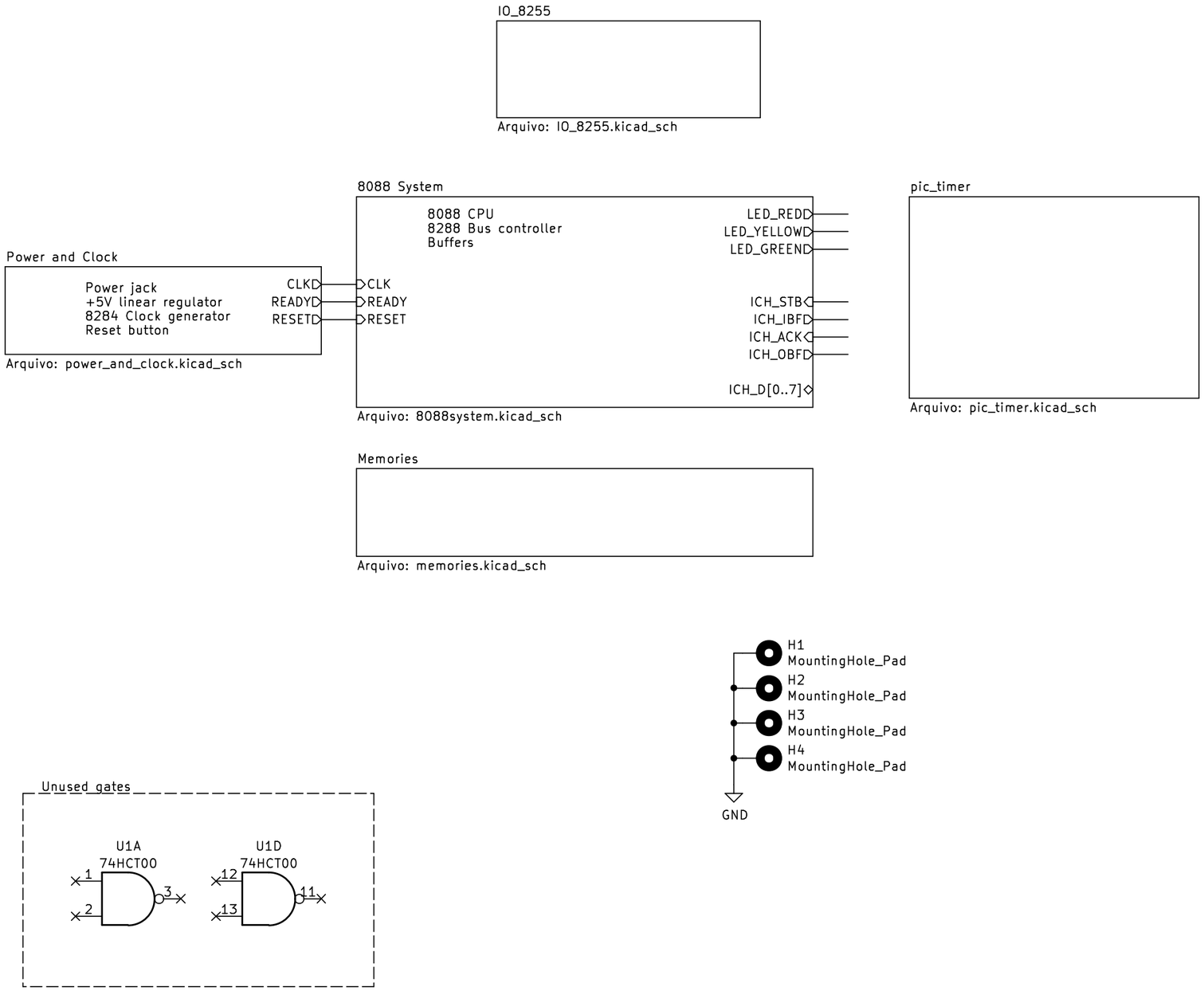
IO_8255
Arquivo: IO_8255.kicad_sch
8088 System
8088 CPU
8288 Bus controller
Buffers
LED_RED
LED_YELLOW
LED_GREEN
CLK
READY
RESET
ICH_STB
ICH_IBF
ICH_ACK
ICH_OBF
ICH_D[0..7]
Arquivo: 8088system.kicad_sch
pic_timer
Arquivo: pic_timer.kicad_sch
Power and Clock
Power jack
+5V linear regulator
8284 Clock generator
Reset button
CLK
READY
RESET
Arquivo: power_and_clock.kicad_sch
Memories
Arquivo: memories.kicad_sch
H1
MountingHole_Pad
H2
MountingHole_Pad
H3
MountingHole_Pad
H4
MountingHole_Pad
GND
Unused gates
U1A
74HCT00
1
2
3
U1D
74HCT00
12
13
11

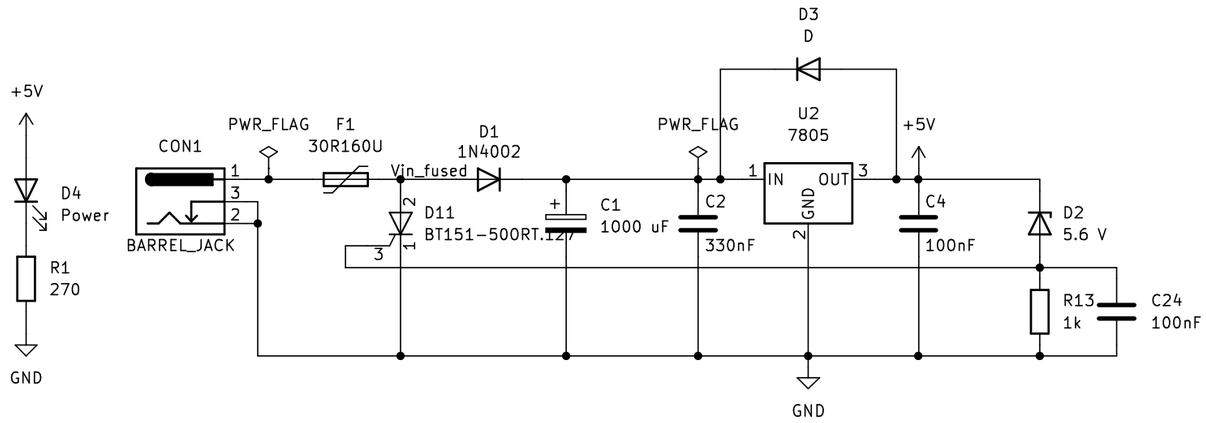
+5V
D4
Power
R1
270
GND
CON1
BARREL_JACK
PWR_FLAG
F1
30R160U
Vin_fused
D11
BT151-500RT.127
D1
1N4002
C1
1000 uF
PWR_FLAG
C2
330nF
D3
D
U2
7805
IN
OUT
GND
+5V
C4
100nF
D2
5.6 V
R13
1k
C24
100nF
GND

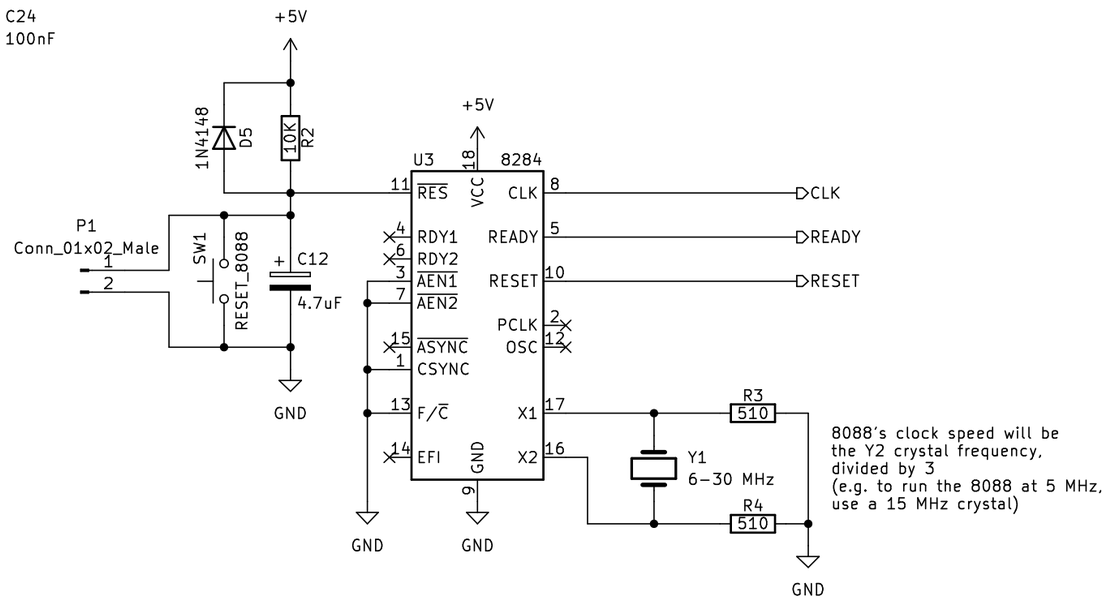
+5V
1N4148
D5
10K
R2
P1
Conn_01x02_Male
SW1
RESET_8088
C12
4.7uF
GND
+5V
U3
8284
VCC
RES
RDY1
RDY2
AEN1
AEN2
ASYNC
CSYNC
F/C
EFI
GND
CLK
READY
RESET
PCLK
OSC
X1
X2
CLK
READY
RESET
R3
510
R4
510
Y1
6-30 MHz
GND
GND
GND
8088's clock speed will be
the Y2 crystal frequency,
divided by 3
(e.g. to run the 8088 at 5 MHz,
use a 15 MHz crystal)

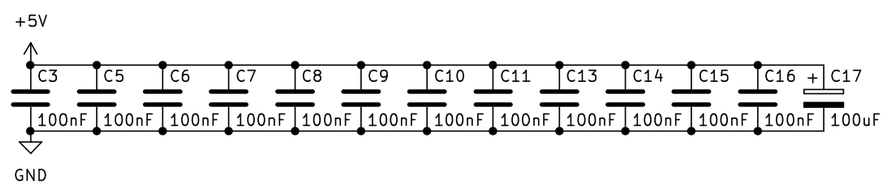
+5V
C3
C5
C6
C7
C8
C9
C10
C11
C13
C14
C15
C16
C17
100nF
100uF
GND

Copiado de: https://sourceforge.net/p/tralala-8088-homebrew/code/HEAD/tree/trunk/hw/8088/

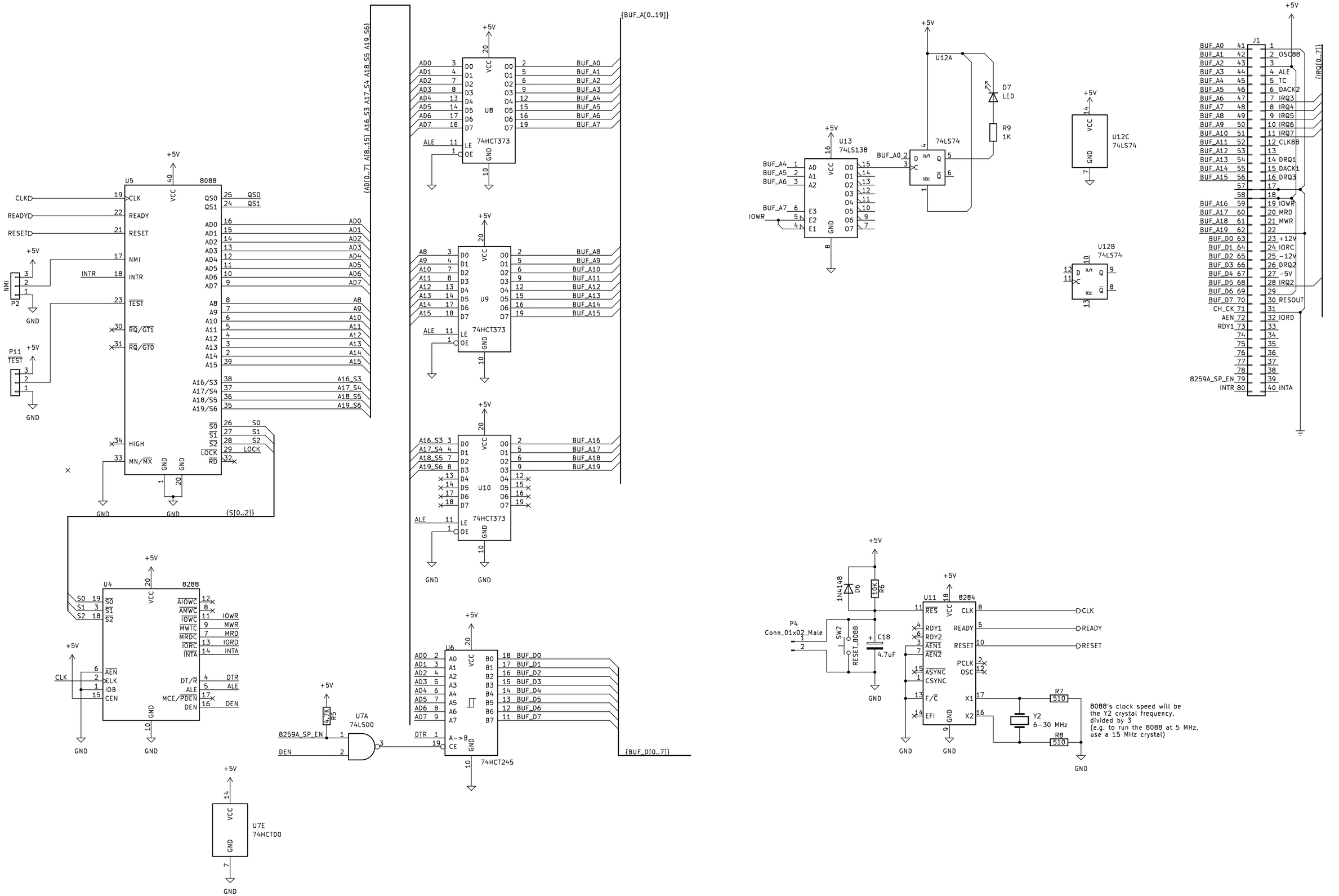

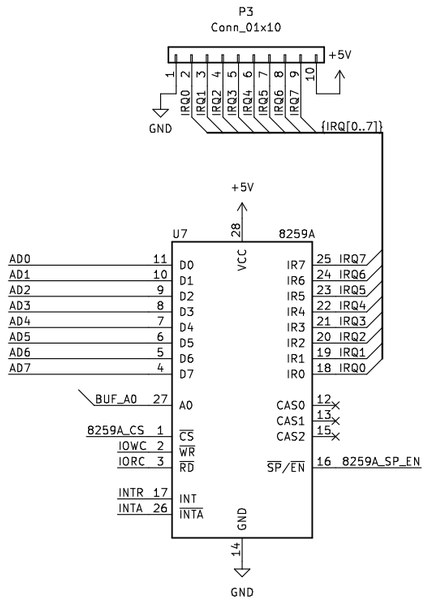
P3
Conn_01x10
+5V
GND
IRQ0 IRQ1 IRQ2 IRQ3 IRQ4 IRQ5 IRQ6 IRQ7
{IRQ[0..7]}
U7
8259A
VCC
GND
AD0 AD1 AD2 AD3 AD4 AD5 AD6 AD7
D0 D1 D2 D3 D4 D5 D6 D7
BUF_A0
A0
8259A_CS
CS
IOWC
WR
IORC
RD
INTR
INTA
INT
IR7 IR6 IR5 IR4 IR3 IR2 IR1 IR0
IRQ7 IRQ6 IRQ5 IRQ4 IRQ3 IRQ2 IRQ1 IRQ0
CAS0 CAS1 CAS2
SP/EN
8259A_SP_EN

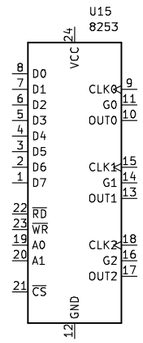
U15
8253
VCC
GND
D0 D1 D2 D3 D4 D5 D6 D7
RD
WR
A0
A1
CS
CLK0 G0 OUT0
CLK1 G1 OUT1
CLK2 G2 OUT2

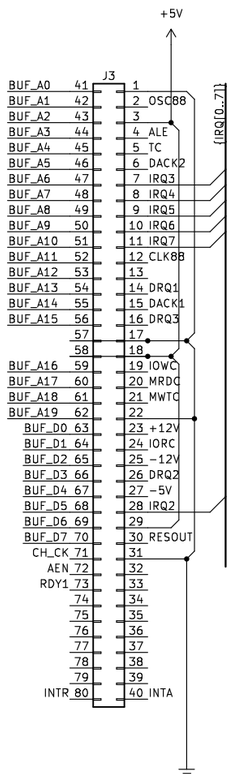
+5V
J3
{IRQ[0..7]}
BUF_A0 BUF_A1 BUF_A2 BUF_A3 BUF_A4 BUF_A5 BUF_A6 BUF_A7 BUF_A8 BUF_A9 BUF_A10 BUF_A11 BUF_A12 BUF_A13 BUF_A14 BUF_A15
BUF_A16 BUF_A17 BUF_A18 BUF_A19
BUF_D0 BUF_D1 BUF_D2 BUF_D3 BUF_D4 BUF_D5 BUF_D6 BUF_D7
CH_CK AEN RDY1 INTR
OSC88 ALE TC DACK2 IRQ3 IRQ4 IRQ5 IRQ6 IRQ7 CLK88 DRQ1 DACK1 DRQ3 IOWC MRDC MWTC +12V IORC -12V DRQ2 -5V IRQ2 RESOUT INTA

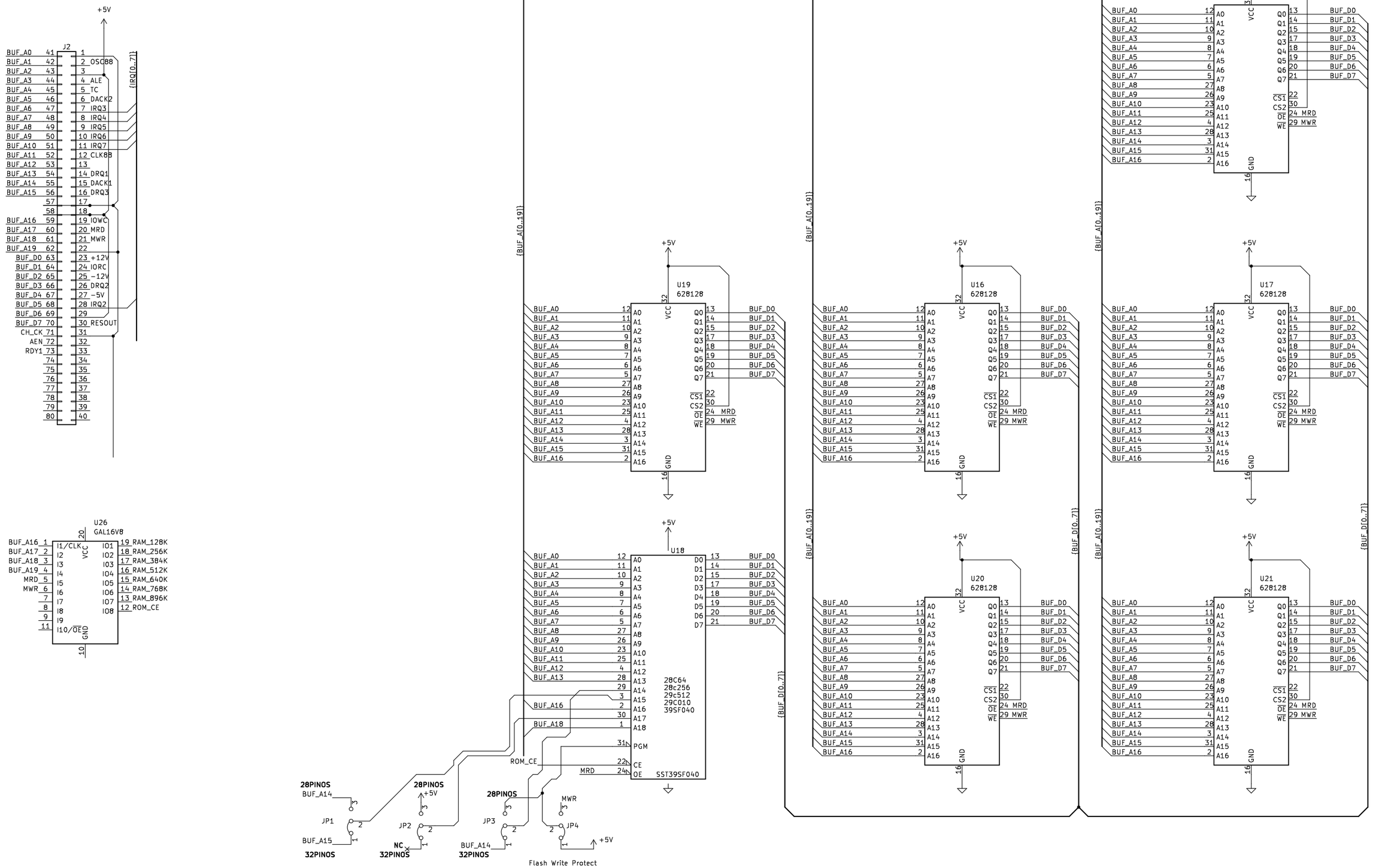
J2
U26
GAL16V8
U18
SST39SF040
28C64
28c256
29c512
29C010
39SF040
U19
U16
U17
U22
U20
U21
628128
{BUF_A[0..19]}
{BUF_D[0..7]}
{IRQ[0..7]}
+5V
28PINOS
32PINOS
JP1
JP2
JP3
JP4
NC
MWR
ROM_CE
MRD
Flash Write Protect

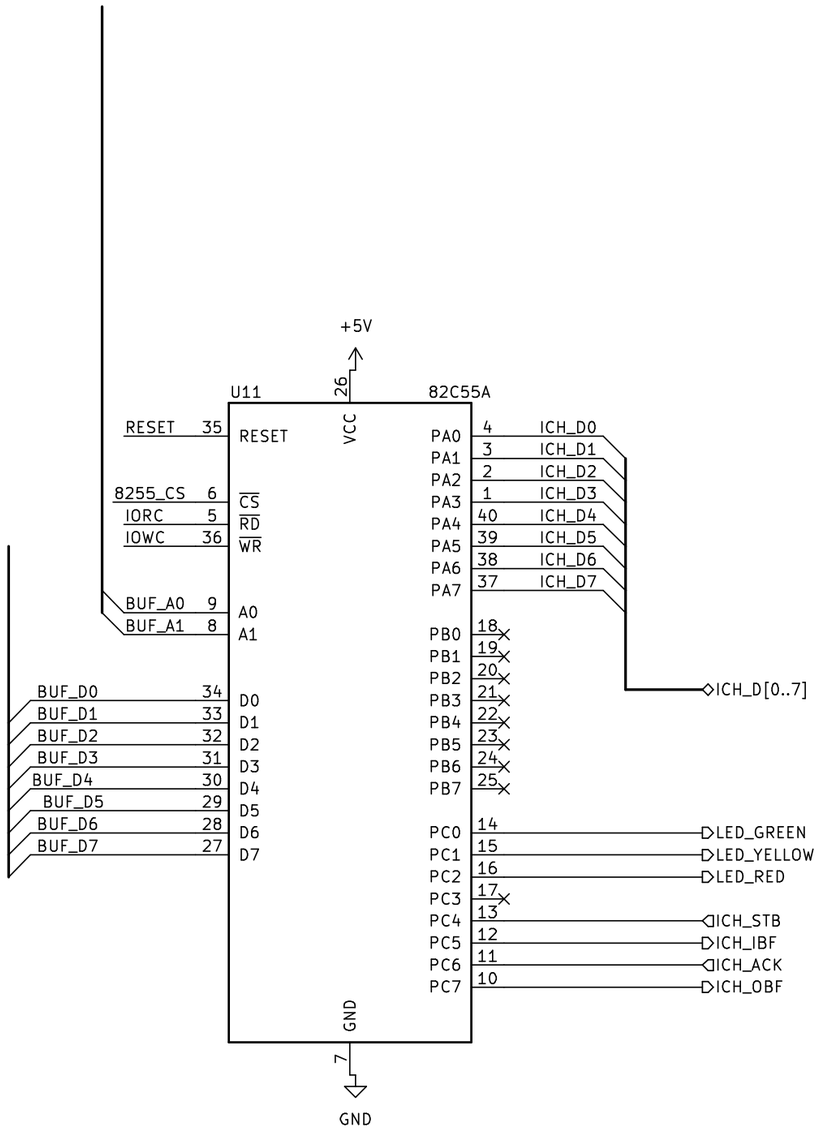
+5V
U11
82C55A
26
VCC
RESET 35
RESET
8255_CS 6
CS
IORC 5
RD
IOWC 36
WR
BUF_A0 9
A0
BUF_A1 8
A1
BUF_D0 34
D0
BUF_D1 33
D1
BUF_D2 32
D2
BUF_D3 31
D3
BUF_D4 30
D4
BUF_D5 29
D5
BUF_D6 28
D6
BUF_D7 27
D7
PA0 4 ICH_D0
PA1 3 ICH_D1
PA2 2 ICH_D2
PA3 1 ICH_D3
PA4 40 ICH_D4
PA5 39 ICH_D5
PA6 38 ICH_D6
PA7 37 ICH_D7
ICH_D[0..7]
PB0 18
PB1 19
PB2 20
PB3 21
PB4 22
PB5 23
PB6 24
PB7 25
PC0 14 LED_GREEN
PC1 15 LED_YELLOW
PC2 16 LED_RED
PC3 17
PC4 13 ICH_STB
PC5 12 ICH_IBF
PC6 11 ICH_ACK
PC7 10 ICH_OBF
GND
7
GND