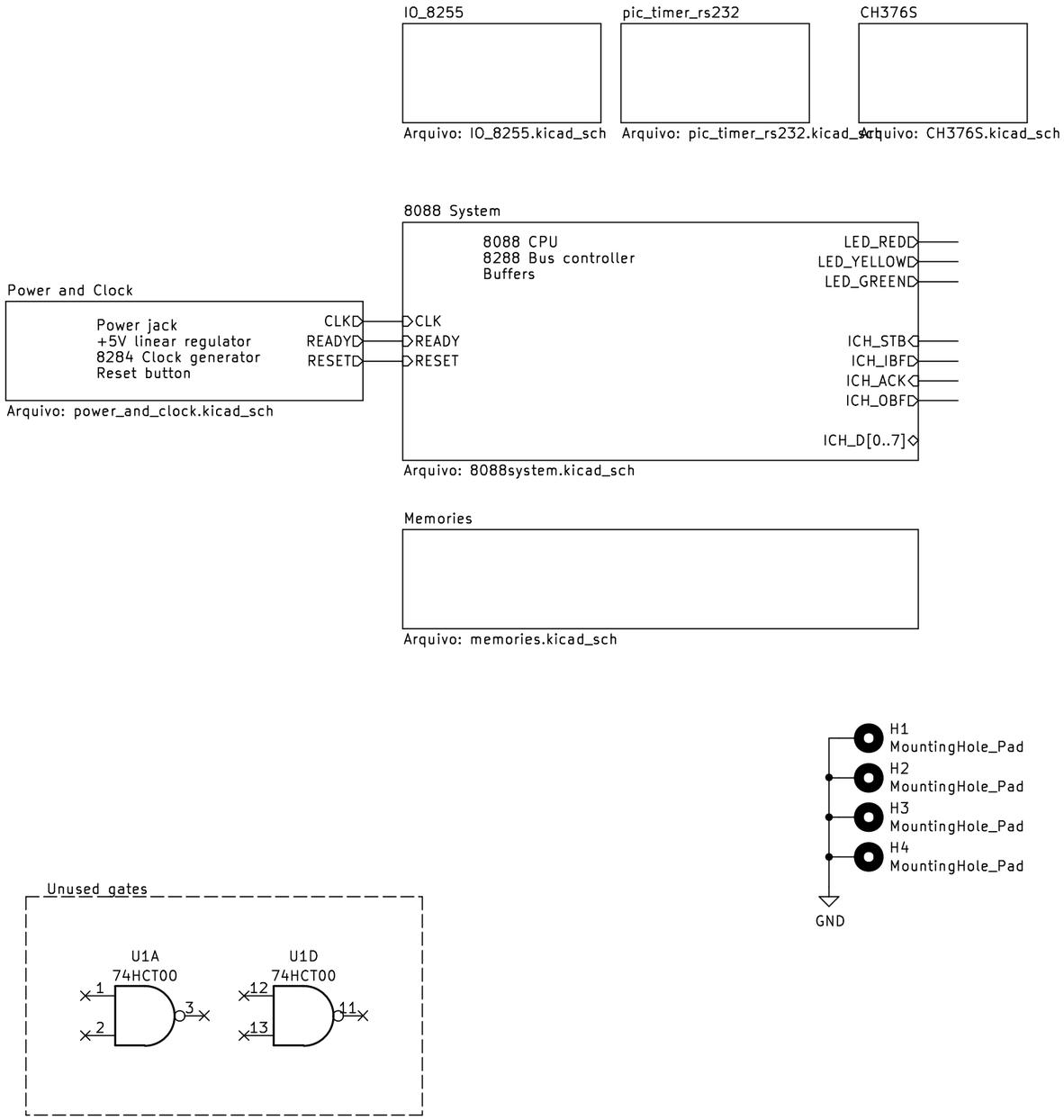
IO_8255
Arquivo: IO_8255.kicad_sch
pic_timer_rs232
Arquivo: pic_timer_rs232.kicad_sch
CH376S
Arquivo: CH376S.kicad_sch
8088 System
8088 CPU
8288 Bus controller
Buffers
LED_RED
LED_YELLOW
LED_GREEN
CLK
READY
RESET
ICH_STB
ICH_IBF
ICH_ACK
ICH_OBF
ICH_D[0..7]
Arquivo: 8088system.kicad_sch
Power and Clock
Power jack
+5V linear regulator
8284 Clock generator
Reset button
CLK
READY
RESET
Arquivo: power_and_clock.kicad_sch
Memories
Arquivo: memories.kicad_sch
H1
MountingHole_Pad
H2
MountingHole_Pad
H3
MountingHole_Pad
H4
MountingHole_Pad
GND
Unused gates
U1A
74HCT00
1
2
3
U1D
74HCT00
12
13
11

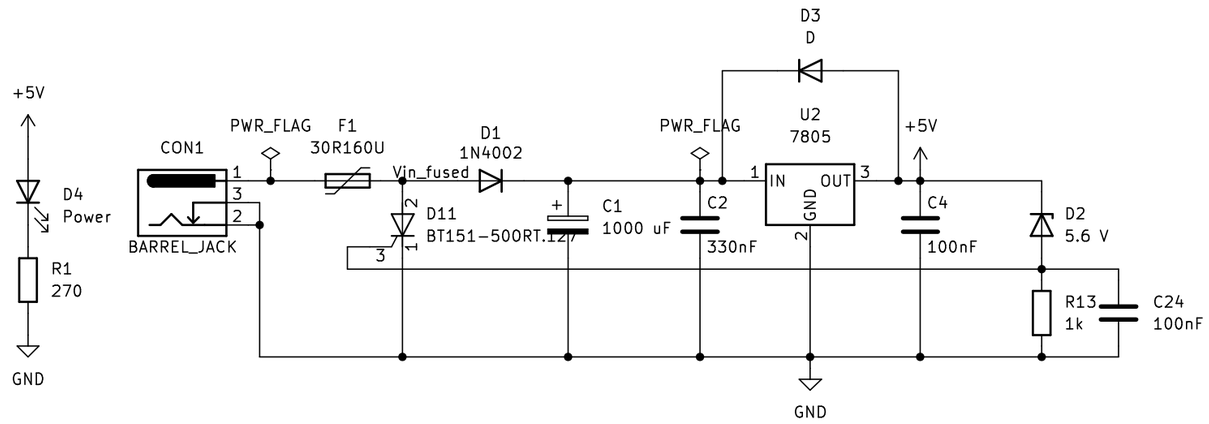
+5V
D4
Power
R1
270
GND
CON1
BARREL_JACK
PWR_FLAG
F1
30R160U
Vin_fused
D1
1N4002
D11
BT151-500RT.127
C1
1000 uF
PWR_FLAG
C2
330nF
D3
D
U2
7805
IN
OUT
GND
+5V
C4
100nF
D2
5.6 V
R13
1k
C24
100nF
GND

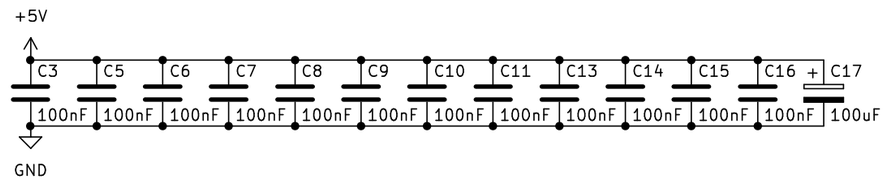
+5V
C3
C5
C6
C7
C8
C9
C10
C11
C13
C14
C15
C16
C17
100nF
100uF
GND

Copiado de: https://sourceforge.net/p/tralala-8088-homebrew/code/HEAD/tree/trunk/hw/8088/

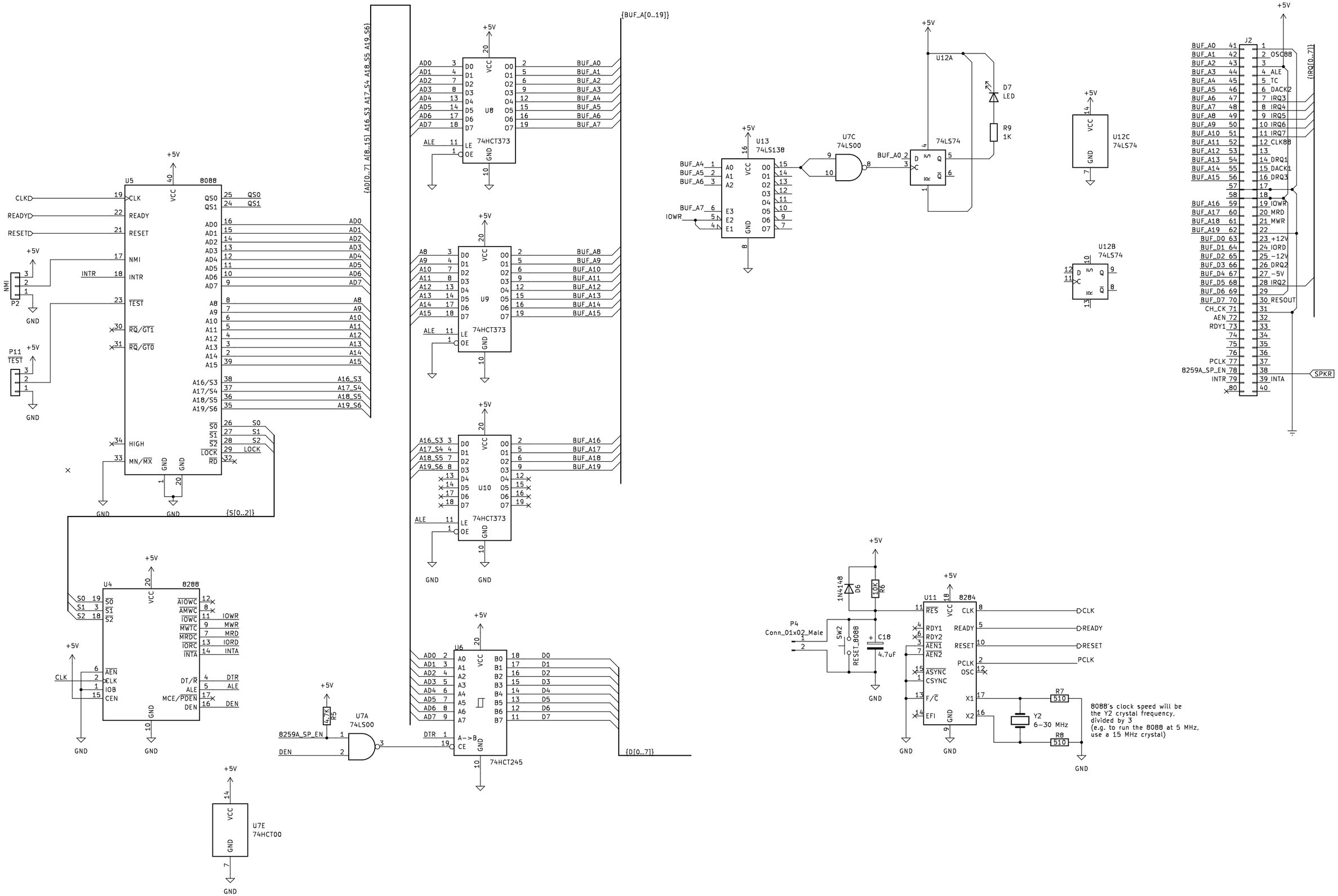

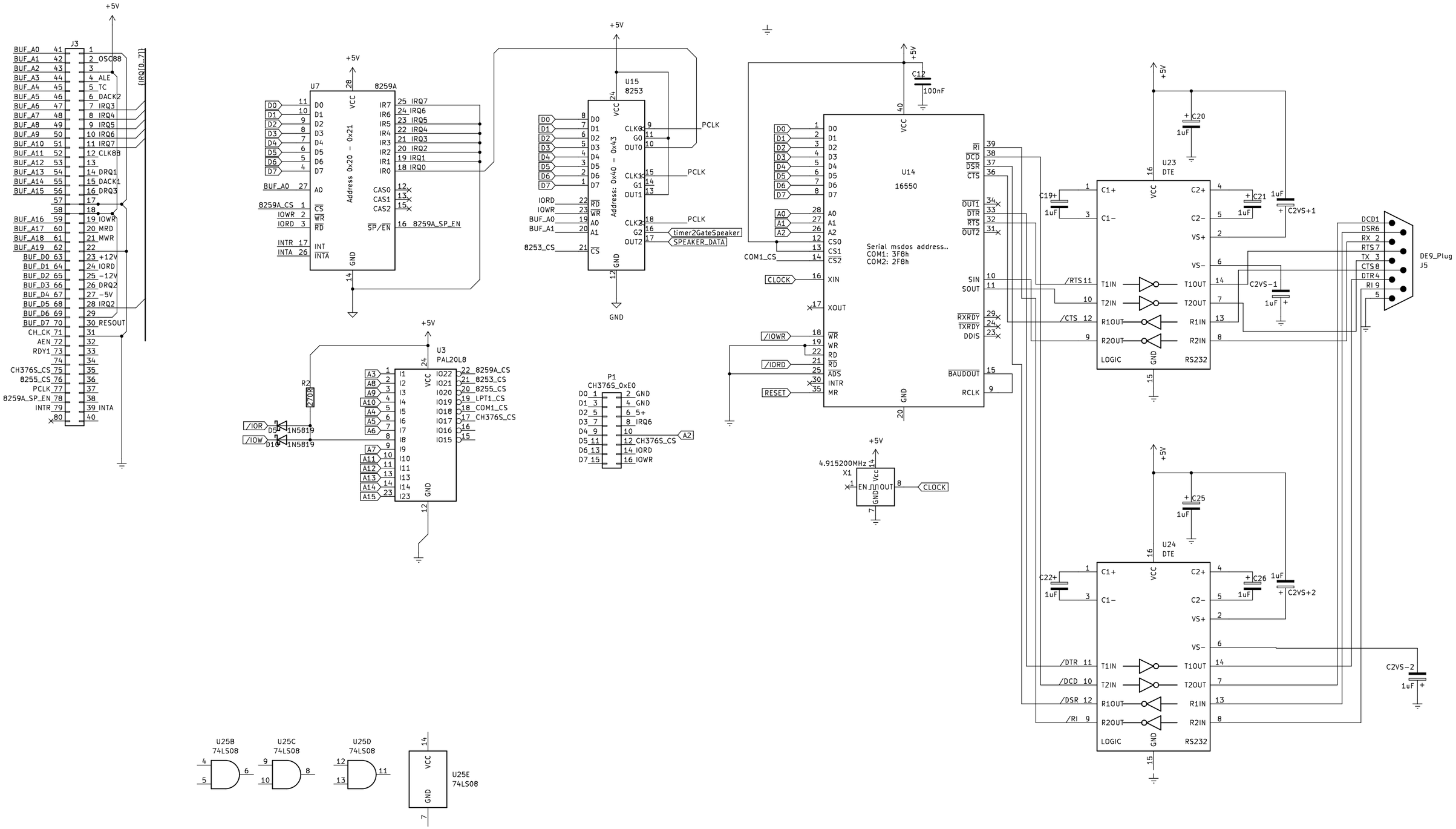
J3
U7 8259A
Address 0x20 - 0x21
U15 8253
Address: 0x40 - 0x43
U14 16550
Serial msdos address..
COM1: 3F8h
COM2: 2F8h
U23 DTE
U24 DTE
LOGIC
RS232
DE9_Plug J5
U3 PAL20L8
P1 CH376S_0xE0
X1 4.915200MHz
U25B 74LS08
U25C 74LS08
U25D 74LS08
U25E 74LS08

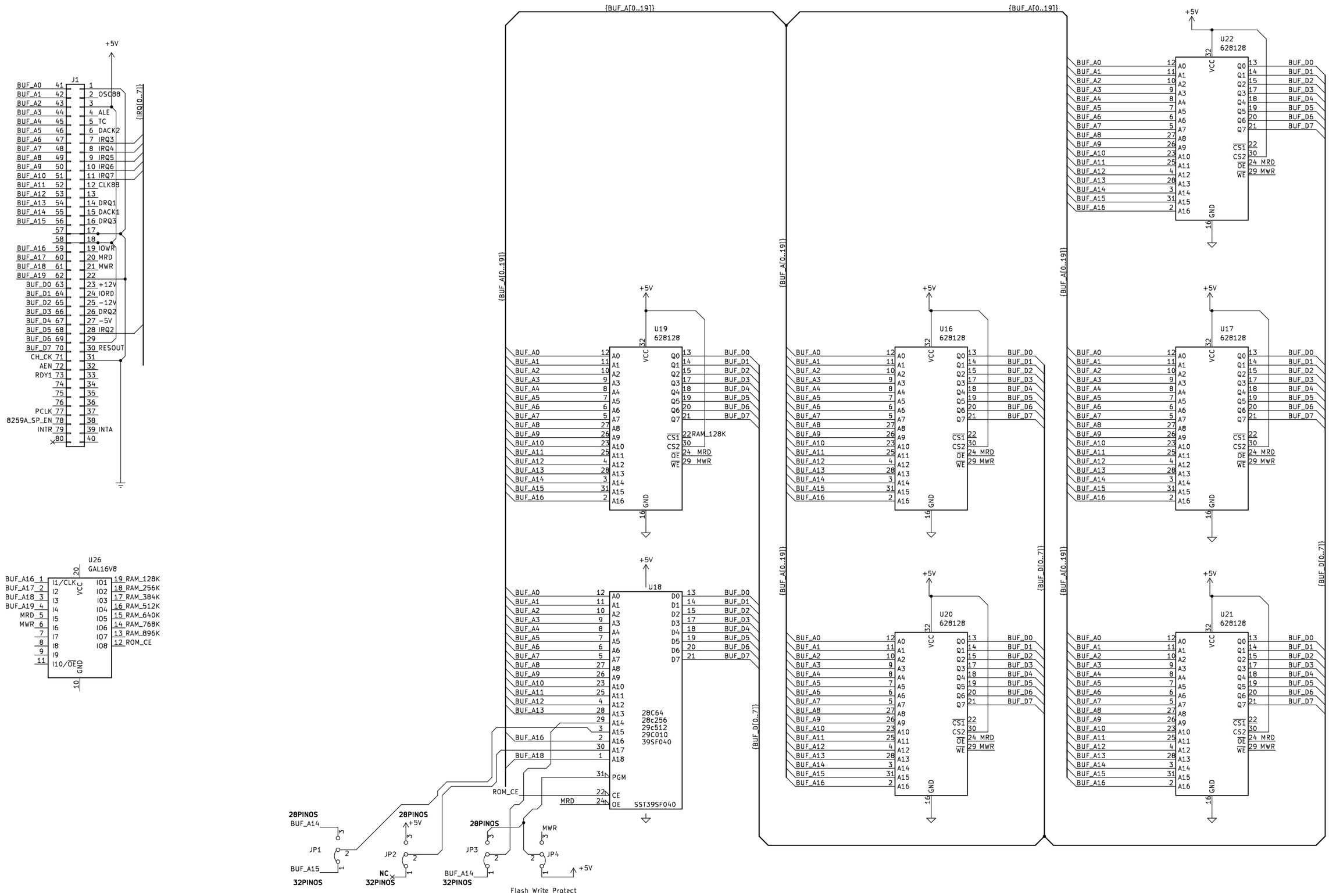
J1
+5V
{IRQ[0..7]}
BUF_A0 41 1
BUF_A1 42 2 OSC88
BUF_A2 43 3
BUF_A3 44 4 ALE
BUF_A4 45 5 TC
BUF_A5 46 6 DACK2
BUF_A6 47 7 IRQ3
BUF_A7 48 8 IRQ4
BUF_A8 49 9 IRQ5
BUF_A9 50 10 IRQ6
BUF_A10 51 11 IRQ7
BUF_A11 52 12 CLK88
BUF_A12 53 13
BUF_A13 54 14 DRQ1
BUF_A14 55 15 DACK1
BUF_A15 56 16 DRQ3
57 17
58 18
BUF_A16 59 19 IOWR
BUF_A17 60 20 MRD
BUF_A18 61 21 MWR
BUF_A19 62 22
BUF_D0 63 23 +12V
BUF_D1 64 24 IORD
BUF_D2 65 25 -12V
BUF_D3 66 26 DRQ2
BUF_D4 67 27 -5V
BUF_D5 68 28 IRQ2
BUF_D6 69 29
BUF_D7 70 30 RESOUT
CH_CK 71 31
AEN 72 32
RDY1 73 33
74 34
75 35
76 36
PCLK 77 37
8259A_SP_EN 78 38
INTR 79 39 INTA
80 40
U26
GAL16V8
BUF_A16 1 I1/CLK
BUF_A17 2 I2
BUF_A18 3 I3
BUF_A19 4 I4
MRD 5 I5
MWR 6 I6
7 I7
8 I8
9 I9
11 I10/OE
VCC 20
GND 10
19 RAM_128K IO1
18 RAM_256K IO2
17 RAM_384K IO3
16 RAM_512K IO4
15 RAM_640K IO5
14 RAM_768K IO6
13 RAM_896K IO7
12 ROM_CE IO8
{BUF_A[0..19]}
U19
628128
U16
628128
U17
628128
U20
628128
U21
628128
U22
628128
U18
28C64
28c256
29c512
29C010
39SF040
SST39SF040
VCC 32
GND 16
A0 12
A1 11
A2 10
A3 9
A4 8
A5 7
A6 6
A7 5
A8 27
A9 26
A10 23
A11 25
A12 4
A13 28
A14 3
A15 31
A16 2
Q0 13
Q1 14
Q2 15
Q3 17
Q4 18
Q5 19
Q6 20
Q7 21
CS1 22
CS2 30
OE 24 MRD
WE 29 MWR
RAM_128K
BUF_D0
BUF_D1
BUF_D2
BUF_D3
BUF_D4
BUF_D5
BUF_D6
BUF_D7
{BUF_D[0..7]}
A17 30
A18 1
PGM 31
CE 22
OE 24
ROM_CE
MRD
28PINOS
BUF_A14
JP1
BUF_A15
32PINOS
JP2
NC
JP3
JP4
MWR
Flash Write Protect

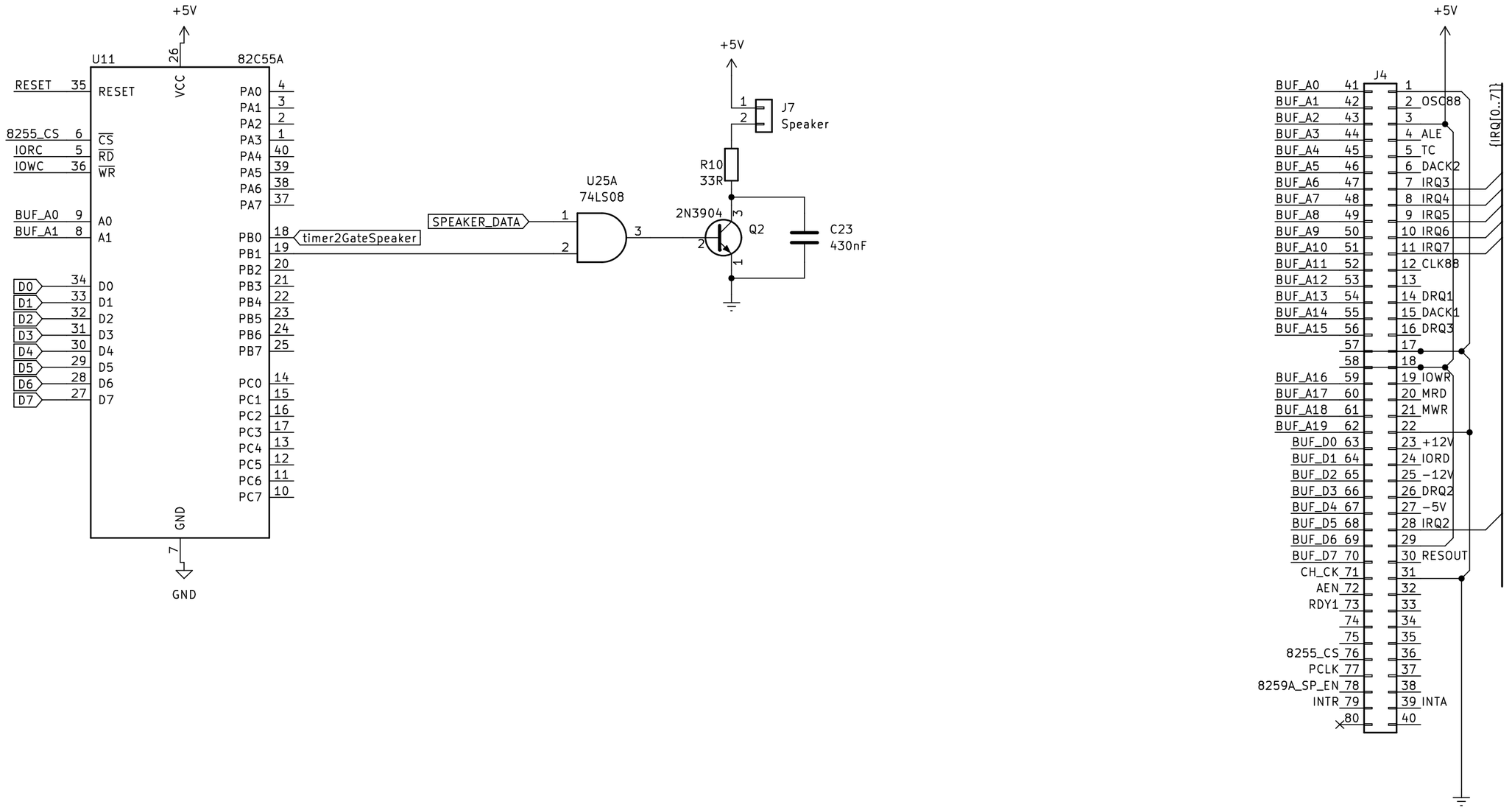
+5V
U11
82C55A
26
VCC
RESET 35
RESET
8255_CS 6
CS
IORC 5
RD
IOWC 36
WR
BUF_A0 9
A0
BUF_A1 8
A1
D0 34
D1 33
D2 32
D3 31
D4 30
D5 29
D6 28
D7 27
PA0 4
PA1 3
PA2 2
PA3 1
PA4 40
PA5 39
PA6 38
PA7 37
PB0 18
PB1 19
PB2 20
PB3 21
PB4 22
PB5 23
PB6 24
PB7 25
PC0 14
PC1 15
PC2 16
PC3 17
PC4 13
PC5 12
PC6 11
PC7 10
timer2GateSpeaker
GND
7
GND
SPEAKER_DATA
U25A
74LS08
+5V
J7
Speaker
R10
33R
2N3904
Q2
C23
430nF
+5V
J4
BUF_A0 41
BUF_A1 42
BUF_A2 43
BUF_A3 44
BUF_A4 45
BUF_A5 46
BUF_A6 47
BUF_A7 48
BUF_A8 49
BUF_A9 50
BUF_A10 51
BUF_A11 52
BUF_A12 53
BUF_A13 54
BUF_A14 55
BUF_A15 56
57
58
BUF_A16 59
BUF_A17 60
BUF_A18 61
BUF_A19 62
BUF_D0 63
BUF_D1 64
BUF_D2 65
BUF_D3 66
BUF_D4 67
BUF_D5 68
BUF_D6 69
BUF_D7 70
CH_CK 71
AEN 72
RDY1 73
74
75
8255_CS 76
PCLK 77
8259A_SP_EN 78
INTR 79
80
1
2 OSC88
3
4 ALE
5 TC
6 DACK2
7 IRQ3
8 IRQ4
9 IRQ5
10 IRQ6
11 IRQ7
12 CLK88
13
14 DRQ1
15 DACK1
16 DRQ3
17
18
19 IOWR
20 MRD
21 MWR
22
23 +12V
24 IORD
25 -12V
26 DRQ2
27 -5V
28 IRQ2
29
30 RESOUT
31
32
33
34
35
36
37
38
39 INTA
40
{IRQ[0..7]}

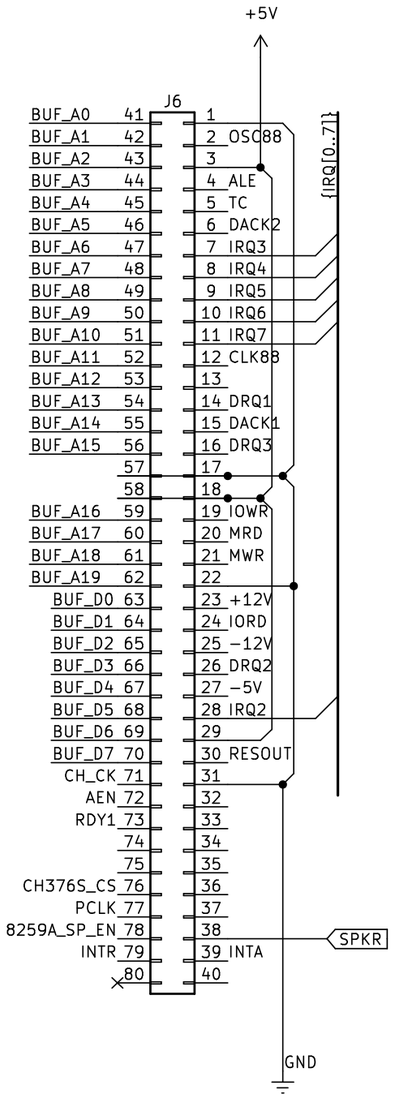
+5V
J6
BUF_A0 41
BUF_A1 42
BUF_A2 43
BUF_A3 44
BUF_A4 45
BUF_A5 46
BUF_A6 47
BUF_A7 48
BUF_A8 49
BUF_A9 50
BUF_A10 51
BUF_A11 52
BUF_A12 53
BUF_A13 54
BUF_A14 55
BUF_A15 56
57
58
BUF_A16 59
BUF_A17 60
BUF_A18 61
BUF_A19 62
BUF_D0 63
BUF_D1 64
BUF_D2 65
BUF_D3 66
BUF_D4 67
BUF_D5 68
BUF_D6 69
BUF_D7 70
CH_CK 71
AEN 72
RDY1 73
74
75
CH376S_CS 76
PCLK 77
8259A_SP_EN 78
INTR 79
80
1
2 OSC88
3
4 ALE
5 TC
6 DACK2
7 IRQ3
8 IRQ4
9 IRQ5
10 IRQ6
11 IRQ7
12 CLK88
13
14 DRQ1
15 DACK1
16 DRQ3
17
18
19 IOWR
20 MRD
21 MWR
22
23 +12V
24 IORD
25 -12V
26 DRQ2
27 -5V
28 IRQ2
29
30 RESOUT
31
32
33
34
35
36
37
38
39 INTA
40
{IRQ[0..7]}
SPKR
GND