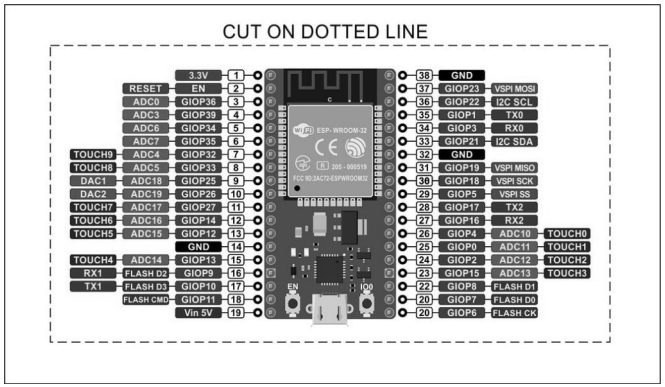
CUT ON DOTTED LINE
3.3V
EN
RESET
ADC0 GIOP36
ADC3 GIOP39
ADC6 GIOP34
ADC7 GIOP35
TOUCH9 ADC4 GIOP32
TOUCH8 ADC5 GIOP33
DAC1 ADC18 GIOP25
DAC2 ADC19 GIOP26
TOUCH7 ADC17 GIOP27
TOUCH6 ADC16 GIOP14
TOUCH5 ADC15 GIOP12
GND
TOUCH4 ADC14 GIOP13
RX1 FLASH D2 GIOP9
TX1 FLASH D3 GIOP10
FLASH CMD GIOP11
Vin 5V
GND
GIOP23 VSPI MOSI
GIOP22 I2C SCL
GIOP1 TX0
GIOP3 RX0
GIOP21 I2C SDA
GND
GIOP19 VSPI MISO
GIOP18 VSPI SCK
GIOP5 VSPI SS
GIOP17 TX2
GIOP16 RX2
GIOP4 ADC10 TOUCH0
GIOP0 ADC11 TOUCH1
GIOP2 ADC12 TOUCH2
GIOP15 ADC13 TOUCH3
GIOP8 FLASH D1
GIOP7 FLASH D0
GIOP6 FLASH CK
ESP-WROOM-32
EN
IO0

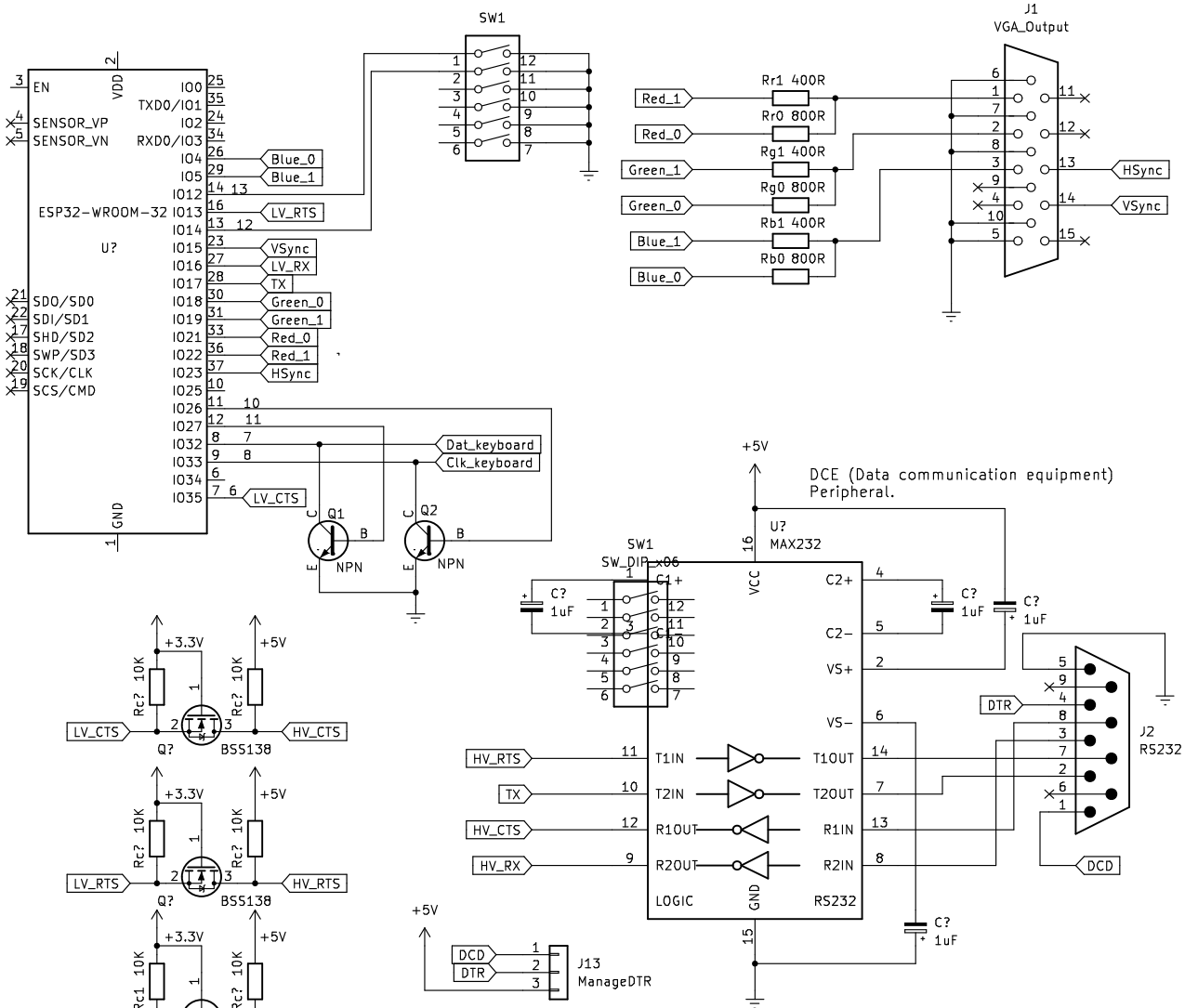
ESP32-WROOM-32
U?
EN
VDD
SENSOR_VP
SENSOR_VN
IO0
TXD0/IO1
IO2
RXD0/IO3
IO4
IO5
IO12
IO13
IO14
IO15
IO16
IO17
IO18
IO19
IO21
IO22
IO23
IO25
IO26
IO27
IO32
IO33
IO34
IO35
SDO/SD0
SDI/SD1
SHD/SD2
SWP/SD3
SCK/CLK
SCS/CMD
GND
Blue_0
Blue_1
LV_RTS
VSync
LV_RX
TX
Green_0
Green_1
Red_0
Red_1
HSync
Dat_keyboard
Clk_keyboard
LV_CTS
Q1
Q2
NPN
SW1
Rr1 400R
Rr0 800R
Rg1 400R
Rg0 800R
Rb1 400R
Rb0 800R
J1
VGA_Output
HSync
VSync
+5V
DCE (Data communication equipment)
Peripheral.
U?
MAX232
SW1
SW_DIP_x06
C?
1uF
VCC
C1+
C1−
C2+
C2−
VS+
VS−
T1IN
T2IN
R1OUT
R2OUT
T1OUT
T2OUT
R1IN
R2IN
LOGIC
GND
RS232
HV_RTS
TX
HV_CTS
HV_RX
DTR
DCD
J2
RS232
J13
ManageDTR
+3.3V
Rc? 10K
Rc1 10K
LV_CTS
HV_CTS
LV_RTS
HV_RTS
livre2
Livre1
LV_RX
HV_RX
Q?
BSS138
Clk_keyboard
Dat_keyboard
Rps2 120R
Rps1 120R
2K
Rps1
Rps2
J?
Mini-DIN-6
J?
Barrel_Jack_Switch
U?
L7805
IN
OUT
GND
C?
10uF