Sinusoidal Steady-State Analysis

Quang Chinh Pham
Email: chinh.pq2514007@sis.hust.edu.vn

Abstract
These lecture notes provide a comprehensive introduction to Sinusoidal Steady-State Analysis, a fundamental technique for evaluating linear alternating current (AC) circuits. The text introduces the concept of phasors to transform complex time-domain integro-differential equations into simpler algebraic equations in the frequency domain. Key topics include the definitions of impedance and admittance, the frequency-domain application of Kirchhoff's laws, and the adaptation of standard circuit theorems; such as nodal analysis, mesh analysis, and Thevenin's theorem to AC systems. This foundational knowledge is essential for advanced studies in analog circuit design, filtering, and power systems.

Keywords: AC, sinusoidal, impedance

1. The Sinusoidal Source

A **sinusoidal voltage source** (independent or dependent) produces a voltage that varies sinusoidally with time. A **sinusoidal current source** (independent or dependent) produces a current that varies sinusoidally with time.

We write a sinusoidally varying voltage as

$$v = V_m \, cos(\omega t + \varphi)$$

Note that the sinusoidal function repeats at regular intervals. Such function is called periodic. The time required for the sinusoidal function to pass through its possible values is referred to as the **period** of the function and is denoted T. The reciprocal of T is gives the number of cycles per second, or the frequency, denoted f, or

$$f = \frac{1}{T}$$

A cycle per second is referred to as herts (Hz). Omega (ω) represnets the angular frequency of the sinusoidal function or

$$\omega = 2\pi f = 2\pi/T$$

The angle φ in the sine equation is known as the **phase angle** of the sinusoidal voltage. It determines the value of the sinusoidal function at $t = 0$. It fixes the point on the periodic wave at which we start measuring time. If φ is positive, the sinusoidal function shifts to the left, whereas if φ is negative, the function shifts to the right.

Another important characteristic of the sinusoidal voltage (or current) is its **rms value**. The rms value of a periodic function is defined as the square root of the mean value of the square function. The rms value v is

$$V_{rms} = \sqrt{\frac{1}{T}\int_{t_0}^{t_0+T} V_m^2 \cos^2(\omega t + \varphi)dt}$$

The quantity under the radical sign reduces to $V_m^2/2$. The rms value of sinusoidal voltage source is

$$\boxed{V_{rms} = \frac{V_m}{\sqrt{2}}}$$

If you calculate the average value of an AC current in a circuit, it would be zero, but technically the light bulb are still working no matter what is the current direction. That's why the average value equals zero is a trash value, we don't need it. The absolute core purpose of rms is the "bridge" between AC and DC. An AC voltage with an rms value of $220V$ will dissipate the exact same amount of heat (power) across a give resistor as a perfectly flat $220V$ direct current (DC).

2. The Sinusoidal Response

We assume the initial current in the circuit to be zero and measure time from the moment the switch is closed. The task is to derive the expression for $i(t)$ when $t \geq 0$. Direct application of Kirchhoff's voltage law to the circuit leads to the ordinary differential equation

$$L\frac{di}{dt} + Ri = V_m \cos(\omega t + \varphi)$$

The solution for i is

$$i = \frac{-V_m}{\sqrt{R^2 + \omega^2 L^2}} \cos(\varphi - \theta) e^{-(R/L)t} + \frac{V_m}{\sqrt{R^2 + \omega^2 L^2}} \cos(\omega t + \varphi - \theta)$$

where θ is defined as the angle whose tangent is $\omega L/R$. Thus we can easily determine θ for a circuit driven by a sinusoidal source of known frequency.

The first term on the right hand-side of the above eqution is referred to as the **transient component** of the current because it becomes infinitesimal as time elapses. The second term on the right-hand side is known as the **steady-state component** of the solution. It exists as long as the switch remains closed and the source continues to supply the sinusoidal voltage.

We now focus on the steady-state portion of the i equation. It is important to remember the following characteristics of the steady-state solution:

1. The steady-state solution is a sinusoidal function.
2. The frequency of the response signal is identical to the frequency ofthe source signal. This condition is always true in a linear circuit when the circuit parameters, R, L, and C, are constant. (If frequencies in the response signals are not present in the source signals, there is a nonlinear element in the circuit.)
3. The maximum amplitude of the steady-state response, in general,differs from the maximum amplitude of the source. For the circuit being discussed, the maximum amplitude of the response signal is $V_m/\sqrt{R^2 + \omega^2 L^2}$, and the maximum amplitude of the signal souce is V_m.
4. The phase angle of the response signal, in general, differs from the phase angle of the source. For the circuit being discussed, the phase angle of the current is $\varphi - \theta$ and that of the voltage is φ.

These characteristics are worth remembering because they help you understand the motivation for the phasor method, which we introduce in the next section. In particular, note that once the decision has been made to find only the steady-state response, the task is reduced to finding the max- imum amplitude and phase angle of the response signal. The waveform and frequency of the response are already known.

3. The Phasor

The **phasor** is a complex number that carries the amplitude and the phase angle information of a sinusoidal function. The phasor concept is rooted in Euler's identity, which relates the exponential fuction to the trigonometric function:

$$e^{\pm j\theta} = \cos\theta \pm j\sin\theta$$

We can think of the cosine function as the real part and sine function as the imaginary part; that is,

$$\cos\theta = Re\{e^{j\theta}\}$$

and

$$\sin\theta = Im\{e^{j\theta}\}$$

where *Re* means "the real part of" and *Im* means "the imaginary part of". We can write the sinusoidal voltage function given in this form:

$$\begin{aligned} v &= V_m\cos(\omega t + \varphi) && (1)\\ &= V_m Re\{e^{j(\omega t+\varphi)}\} && (2)\\ &= V_m Re\{e^{j\omega t}e^{j\varphi}\} && (3) \end{aligned}$$

We can move the coefficient V_m inside the argument of the real part of the function withou altering the result. We can also reverse the order of the two exponential functions inside the argument and write as

$$v = Re\{V_m e^{j\varphi}e^{j\omega t}\}$$

Note that the quantity $V_m e^{j\varphi}$ is a complex number that carries the amplitude and the phase angle of the given sinusoidal function. This complex number is by definition the **phasor representation**, or **phasor transform**, or the given sinusoidal function. Thus

$$\boxed{\mathbf{V} = V_m e^{j\varphi} = P\{V_m\cos(\omega t + \varphi)\}}$$

where the notation $P\{V_m\cos(\omega t + \varphi)\}$ is read "the phasor transform of $V_m\cos(\omega t + \varphi)$". Thus the phasor transform transfers the sinusoidal function from the time domain to the complex-number domain, which is also called the **frequency domain**.

We also can express a phasor in rectangular form. Both are useful in circuit application of the phasor concept.

$$\mathbf{V} = V_m\cos\varphi + jV_m\sin\varphi$$

This abbreviation is the angle notation, we use this notation extensively in the material that follows

$$1\underline{/\varphi^\circ} = 1e^{j\varphi}$$

Inverse Phasor Transform

For a phasor we may write the expression for the sinusoidal function. Thus for $\mathbf{V} = 100\underline{/-26^\circ}$, the expression for v is $100\cos(\omega t - 26^\circ)$ because we have decied to use the cosine function for all sinusoids. The phasor carries only amplitude and phase information, we cannot deduce the value of ω. The step of going from the phasor transform to the time-domain expression is referred to as *finding the inverse phasor transform* and is formalized by the equation

$$P^{-1}\{V_m e^{j\varphi}\} = Re\{V_m e^{j\varphi}e^{j\omega t}\}$$

where the notation $P^{-1}\{V_m e^{j\varphi}\}$ is read as "the inverse phasor transform of $V_m e^{j\varphi}$". The equation indicates to find the inverse phasor transform, we multiplay the phasor by $e^{j\omega t}$ and then extract the real part of the product.

The phasor transform is useful in circuit analysis because it reduces the task of finding the maximum amplitude and phase angle of the steady-state sinusoidal response to the algebra of complex numbers. The following observations verify this conclusion:

1. The transient component vanishes as time elapses, so the steady-state component of the solution must also satisfy the differential equation.
2. In a linear circuit driven by sinusoidal sources, the steady-state response also is sinusoidal, and the frequency of the sinusoidal response is the same as the frequency of the sinusoidal source.
3. Using the notation introduced, we can postulate that the steady-state solution is of the form $Re\{Ae^{j\beta}e^{J\omega t}\}$, where A is the maximum amplitude of the response and β is the phase angle of the response.
4. When we substitude the postulated steady-state solution into the differential equation, the exponential term $e^{j\omega t} cancelsout$, leaving the solution for A and β in the domain of complex numbers.

4. The Passive Circuit Elements in the Frequency Domain

There are two steps in applying phasor transform into circuit analysis. First, we must establish the relationship between the phasor current and the phasor voltage at the terminals of the passive circuit elements. Second, we must develop the phasor-domain version of Kirchhoff's law.

The V-I Relationship for a Resistor

If $i = I_m \cos(\omega t + \theta_i)$ - the voltage at the terminals of the resistor, is

$$v = R[I_m \cos(\omega t + \theta_i)] \tag{4}$$
$$= RI_m[\cos(\omega t + \theta_i)] \tag{5}$$

where I_m is the maximum amplitude of the current in amperes and θ_i is the phase angle of the current.

The phasor transform of this voltage is

$$\mathbf{V} = RI_m e^{j\theta_i} = RI_m \underline{/\theta_i}$$

But the $I_m \underline{/\theta_i}$ is the phasor representation of the sinusoidal current, so we can write the above equation as

$$\boxed{\mathbf{V} = R\mathbf{I}}$$

The V-I Relationship for an Inductor

Thus, for $i = I_m \cos(\omega t + \theta_i)$, the expression for the voltage is

$$v = L\frac{di}{dt} = -\omega L I_m \sin(\omega t + \theta_i)$$

We now rewrite using the cosine function

$$v = -\omega L I_m \cos(\omega t + \theta_i - 90^\circ)$$

using the identity $e^{-j90^\circ} = \cos 90^\circ - j\sin 90^\circ = -j$, we got the relationship between phasor voltage and phasor current for an inductor

$$\boxed{\mathbf{V} = j\omega L\mathbf{I}}$$

When we rewrite it into $\mathbf{V} = \omega L I_m \underline{/(\theta_i + 90)^\circ}$, indicates that the voltage and current are out of phase by exactly 90°. In particular, the voltage leads the current by 90° or, equivalently, the current lags behind the voltage by 90°.

The V-I Relationship for a Capacitor

Assume that $v = V_m \cos(\omega t + \theta_v)$ and we already got $i = Cdv/dt$. We got the relationship betweenp phasor voltage and phasor current for capacitor

$$\boxed{\mathbf{V} = \frac{1}{j\omega C}\mathbf{I}}$$

The voltage across the terminals of a capacitor lags behind the current by exactly 90°. We can easily show this relationship by rewriting the equation like we used to do with inductor.

Impedance and Reactance

Definition of impedance

$$\boxed{\mathbf{V} = Z\mathbf{I}}$$

where Z represents the **impedance** of the circuit. The impedance is the ratio of a circuit element's voltage phasor to its current phasor. Thus the impedance of a resistor is R. The impedance of an inductor is $j\omega L$, the impedance of mutual inductance is $j\omega M$, and the impedance of a capacitor is $1/j\omega C$. In all cases, impedance is measured in ohms.

Although impedance is a complex number, it is not a phasor. All phasors are complex numbers, not all complex numbers are phasors.

The imaginary part of the impedance is called **reactance**. And finally, a reminder. If the reference direction for the current in a passive circuit element is in the direction of the voltage rise across the element, you must insert a minus sign into the equation that relates the voltage to the current.

Circuit Element	Impedance	Reactance
Resistor	R	—
Inductor	$j\omega L$	ωL
Capacitor	$j(-1/\omega C)$	$-1/\omega C$

5. Kirchhoff's Laws in the Frequency Domain

After some math we can prove that, we can apply Kirchhoff's voltage law to phasor voltages.

$$\boxed{\mathbf{V}_1 + \mathbf{V}_2 + \cdots + \mathbf{V}_n = 0}$$

It's the same with kirchhoff's current law in frequency domain

$$\boxed{\mathbf{I}_1 + \mathbf{I}_2 + \cdots + \mathbf{I}_n = 0}$$

6. Series, Parallel Impedance

Combining Impedances in Series and Parallel

The equivalent impedance for impendances in series is

$$Z_{ab} = \frac{\mathbf{V}_{ab}}{\mathbf{I}} = Z_1 + Z_2 + \cdots + Z_n$$

Impedances connected in parallel may be reduced to a single equivalent impedance by the reciprocal relationship

$$\frac{1}{Z_{ab}} = \frac{1}{Z_1} + \frac{1}{Z_2} + \cdots + \frac{1}{Z_n}$$

We can also express the above equation in terms of **admittance**, defined as the reciprocal of impendace and denoted Y. Thus

$$Y = \frac{1}{Z} = G + jB \quad \text{(siemens)}$$

Admittance is a complex number, whose real part is G, called conductance and whose imaginary part, B, is called susceptance. For the parallel impedances equation

$$Y_{ab} = Y_1 + Y_2 + \cdots + Y_n$$

Circuit Element	**Admittance (Y)**	**Susceptance**
Resistor	G	—
Inductor	$j(-1/\omega L)$	$-1/\omega L$
Capacitor	$j\omega C$	ωC

7. Source Transformations and Thévenin-Norton Equivalent Circuits

The techniques for finding the Thévenin equivalent voltage and impedance are identical to those used for resistive circuits, except that the frequency-domain equivalent circuit involves the manipulation of complex quantities. The same holds for finding the Norton equivalent current and impedance.

8. The Node-Voltage Method and Mesh-Current Method

The same concepts apply when we use the node-voltage method to analyze frequency-domain circuits. We can also use the mesh-current method to analyze frequency-domain cir- cuits. The procedures used in frequency-domain applications are the same as those used in analyzing resistive circuits.

9. Phasor Diagrams

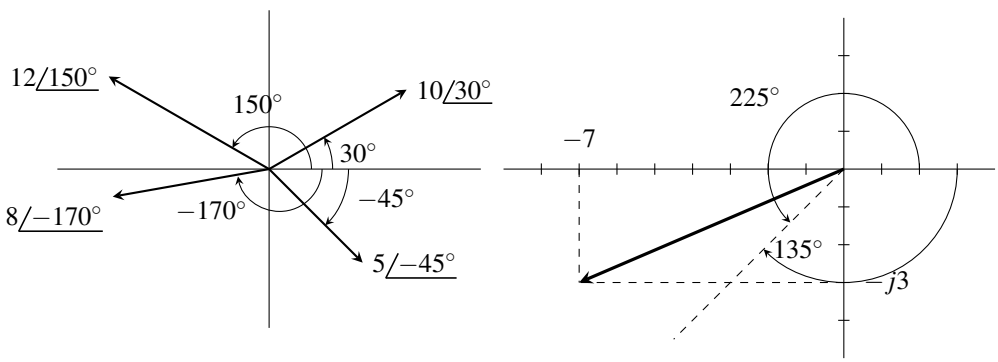

When we are using the phasor method to analyze the steady-state sinusoidal operation of a circuit, a diagram of the phasor currents and voltages may give further insight into the behavior of the circuit. A phasor diagram shows the magnitude and phase angle of each phasor quantity in the complex-number plane