# Two-Port Circuits

Quang Chinh Pham

*Email: chinh.pq2514007@sis.hust.edu.vn*

## 1. The Terminal Equations

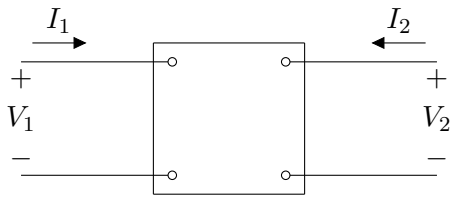


The most general description of the two-port network is carried out in the $s$ domain. For purely resistive networks, the analysis reduces to solvingresistive circuits. Sinusoidal steady-state problems can be solved either by first finding the appropriate $s$-domain expressions and then replacing $s$ with $j\omega$, or by direct analysis in the frequency domain.

There six different ways in which to combine the four variables:

$$\begin{aligned} V_1 &= z_{11}I_1 + z_{12}I_2, \\ V_2 &= z_{21}I_1 + z_{22}I_2; \end{aligned} \tag{1}$$

$$\begin{aligned} I_1 &= y_{11}V_1 + y_{12}V_2, \\ I_2 &= y_{21}V_1 + y_{22}V_2; \end{aligned} \tag{2}$$

$$\begin{aligned} V_1 &= a_{11}V_2 - a_{12}I_2, \\ I_1 &= a_{21}V_2 - a_{22}I_2; \end{aligned} \tag{3}$$

$$\begin{aligned} V_2 &= b_{11}V_1 - b_{12}I_1, \\ I_2 &= b_{21}V_1 - b_{22}I_1; \end{aligned} \tag{4}$$

$$\begin{aligned} V_1 &= h_{11}I_1 + h_{12}V_2, \\ I_2 &= h_{21}I_1 + h_{22}V_2; \end{aligned} \tag{5}$$

$$\begin{aligned} I_1 &= g_{11}V_1 + g_{12}I_2, \\ V_2 &= g_{21}V_1 + g_{22}I_2. \end{aligned} \tag{6}$$

Equations 1-6 are called *parameters* of the two-port circuit. When using (1), we refer to the $z$ parameters of the circuit. Similarly, we refer to the $y$ parameters, the $a$ parameters, the $b$ parameters, the $h$ parameters, and the $g$ parameters of the network.

## 2. The Two-Port Parameters

We can determine the parameters for any circuit by computation or measurement. The computation or measurement to be made comes directly from the parameter equations. For example, suppose that the problem is find the $z$ parameters for a circuit.

$$z_{11} = \left.\frac{V_1}{I_1}\right|_{I_2=0} \Omega, \qquad z_{12} = \left.\frac{V_1}{I_2}\right|_{I_1=0} \Omega,$$

$$z_{21} = \left.\frac{V_2}{I_1}\right|_{I_2=0} \Omega, \qquad z_{22} = \left.\frac{V_2}{I_2}\right|_{I_1=0} \Omega$$

- $z_{11}$ is the impedance seen looking into port 1 when port 2 is open
- $z_{12}$ is a transfer impedance. It is the ratio of the port 1 voltage to the port 2 current when port 1 is open.
- $z_{21}$ is a transfer impedance. It is the ratio of the port 2 voltage to the port 1 current when port 2 is open.
- $z_{22}$ is the impedance seen looking into port 2 when port 1 is open.

A port parameter is obtained by either opening or shorting a port. Moreover, a port parameter is an imped- ance, an admittance, or a dimensionless ratio. The

dimensionless ratio is the ratio of either two voltages or two currents.

$$y_{11} = \left.\frac{I_1}{V_1}\right|_{V_2=0} \text{S}, \qquad y_{12} = \left.\frac{I_1}{V_2}\right|_{V_1=0} \text{S},$$

$$y_{21} = \left.\frac{I_2}{V_1}\right|_{V_2=0} \text{S}, \qquad y_{22} = \left.\frac{I_2}{V_2}\right|_{V_1=0} \text{S}.$$

$$a_{11} = \left.\frac{V_1}{V_2}\right|_{I_2=0}, \qquad a_{12} = -\left.\frac{V_1}{I_2}\right|_{V_2=0} \Omega,$$

$$a_{21} = \left.\frac{I_1}{V_2}\right|_{I_2=0} \text{S}, \qquad a_{22} = -\left.\frac{I_1}{I_2}\right|_{V_2=0}.$$

$$b_{11} = \left.\frac{V_2}{V_1}\right|_{I_1=0}, \qquad b_{12} = -\left.\frac{V_2}{I_1}\right|_{V_1=0} \Omega,$$

$$b_{21} = \left.\frac{I_2}{V_1}\right|_{I_1=0} \text{S}, \qquad b_{22} = -\left.\frac{I_2}{I_1}\right|_{V_1=0}.$$

$$h_{11} = \left.\frac{V_1}{I_1}\right|_{V_2=0} \Omega, \qquad h_{12} = \left.\frac{V_1}{V_2}\right|_{I_1=0},$$

$$h_{21} = \left.\frac{I_2}{I_1}\right|_{V_2=0}, \qquad h_{22} = \left.\frac{I_2}{V_2}\right|_{I_1=0} \text{S}.$$

$$g_{11} = \left.\frac{I_1}{V_1}\right|_{I_2=0} \text{S}, \qquad g_{12} = \left.\frac{I_1}{I_2}\right|_{V_1=0},$$

$$g_{21} = \left.\frac{V_2}{V_1}\right|_{I_2=0}, \qquad g_{22} = \left.\frac{V_2}{I_2}\right|_{V_1=0} \Omega.$$

- Immittance Parameters (Impedance $z$ and Admittance $y$): The term "immittance" is a portmanteau of impedance and admittance. These groups directly relate the voltages and currents at the ports.
- Transmission Parameters ($a$ and $b$): Commonly known as ABCD parameters. They express the voltage and current at one port strictly in terms of the voltage and current at the other port, making them ideal for modeling signal transmission from input to output.
- Hybrid Parameters ($h$ and $g$): They are called "hybrid" because they relate cross-variables. Instead of expressing voltage in terms of current (like $z$), or vice versa (like $y$), they express one input and one output variable in terms of the remaining two.

### 2.1. Relationships Among the Two-Port Parameters

To find the $z$ parameters as functions of the $y$ parameters, we got

$$z_{11} = \frac{y_{22}}{\Delta y}, \qquad z_{12} = -\frac{y_{12}}{\Delta y}$$
$$z_{21} = -\frac{y_{21}}{\Delta y}, \qquad z_{22} = \frac{y_{11}}{\Delta}$$

$z$ parameters as functions of the $a$ parameters,

$$z_{11} = \frac{a_{11}}{a_{21}}, \qquad z_{12} = \frac{\Delta a}{a_{21}}$$
$$z_{21} = -\frac{1}{a_{21}}, \qquad z_{22} = \frac{a_{22}}{a_{21}}$$

### 2.2. Reciprocal Two-port Circuit

If a two-port circuit is *reciprocal*, the following relationships exist among the port parameters

$$z_{12} = z_{21}, \qquad y_{12} = y_{21}$$
$$h_{12} = -h_{21}, \qquad g_{12} = -g_{21}$$

$$a_{11}a_{22} - a_{12}a_{21} = \Delta a = 1$$
$$b_{11}b_{22} - b_{12}b_{21} = \Delta b = 1$$

## 3. Analysis of the Terminated Two-Port Circuit

Six characteristics of the terminated two-port circuit define its terminal behavior

- The input impedance $Z_{in} = V_1/I_1$, or the impedance $Y_{in} = I_1/V_1$
- The output current $I_2$
- The Thevenin voltage and impedance $V_{th}, Z_{th}$ with respect to port 2
- The current gain $I_2/I_1$
- The voltage gain $V_2/V_1$
- The voltage gain $V_2/V_g$

### 3.1. Six characteristics in Terms of the $z$ parameters

$$z_{in} = z_{11} - \frac{z_{12}z_{21}}{z_{22} + z_L}$$
$$V_{th} = \frac{z_{21}}{z_{11} + z_g} V_s$$
$$Z_{th} = z_{22} - \frac{z_{12}z_{21}}{z_{11} + z_g}$$
$$\frac{V_2}{V_1} = \frac{z_{21}z_L}{(z_{11} + z_g)(z_L + z_{22}) - z_{12}z_{21}}$$
$$\frac{I_2}{I_1} = -\frac{z_{21}}{z_{22} + z_L}$$

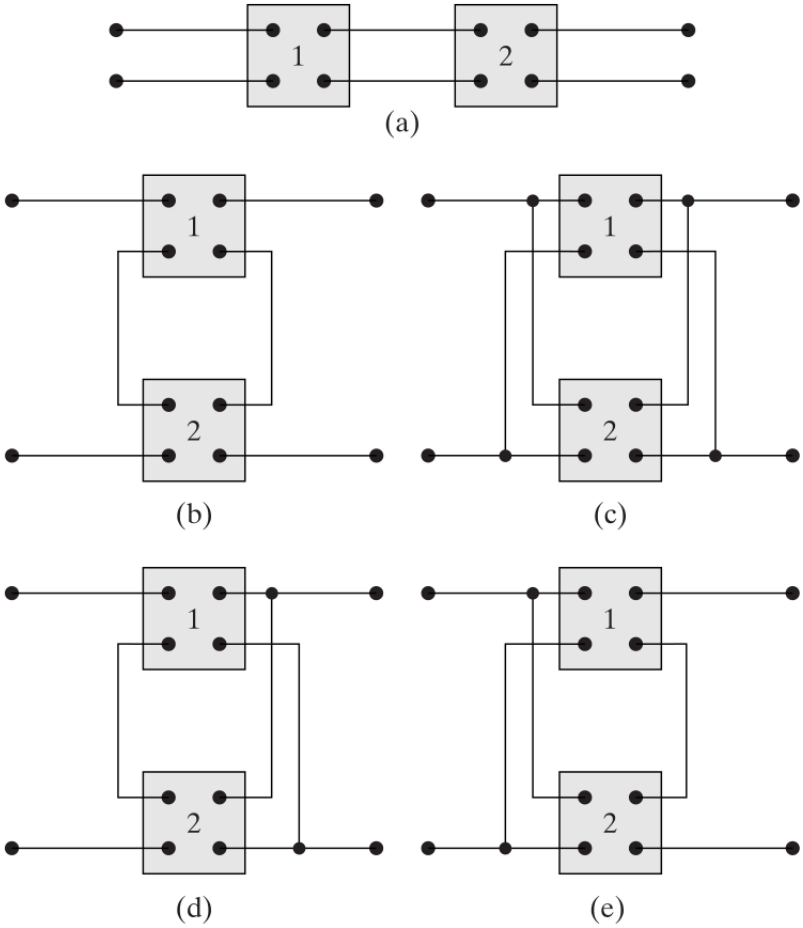


The five basic interconnections of two-port circuits. (a) Cascade. (b) Series (c) Parallel (d) Series-parallel (e) Parallel-series

$$
\begin{aligned}
a_{11} &= a'_{11}a''_{11} + a'_{12}a''_{21} \\
a_{12} &= a'_{11}a''_{12} + a'_{12}a''_{22} \\
a_{21} &= a'_{21}a''_{11} + a'_{22}a''_{21} \\
a_{22} &= a'_{21}a''_{12} + a'_{22}a''_{22}
\end{aligned}
$$