BURNER110526

Date: 2026-05-11

Comment:

File: C:\Users\support\Downloads\BURNER1105261\BURNER1105261\BURNER110526.xgwx

	Variable Kind	Variable	Type	Address	Initial Value	Retain	Used	EIP/OPC UA
1	VAR	AIR_CHECK	BOOL			☐	☒	☐
2	VAR	AIR_CHECK_OK	BOOL			☐	☒	☐
3	VAR	ALARM_AIR_SPEDD	BOOL			☐	☒	☐
4	VAR	Alarm_ESV	BOOL	%MW5.8		☐	☒	☐
5	VAR	ALARM_HIGHT_TEMP	BOOL			☐	☒	☐
6	VAR	ALARM_MISS_FIRE	BOOL			☐	☒	☐
7	VAR	ALARM_NO1_SHUT	BOOL			☐	☒	☐
8	VAR	ALARM_NO2_SHUT	BOOL			☐	☒	☐
9	VAR	ALARM_PRESS	BOOL			☐	☒	☐
10	VAR	ALARM_SEVOR_HIG	BOOL			☐	☒	☐
11	VAR	ALARM_SEVOR_LOW	BOOL			☐	☒	☐
12	VAR	BUNER_START	BOOL			☐	☒	☐
13	VAR	Burner_Doul	BOOL	%MX98		☐	☒	☐
14	VAR	burner_Sing	BOOL	%MW6.1		☐	☒	☐
15	VAR	BUR_START_PER	BOOL	%MW1.5		☐	☒	☐
16	VAR	B_EMG_STOP	BOOL	%MW0.0		☐	☒	☐
17	VAR	B_RESET	BOOL	%MW0.1		☐	☒	☐
18	VAR	checkk	BOOL			☐	☐	☐
19	VAR	CHECK_HIG_SEVOR_OK	BOOL			☐	☒	☐
20	VAR	CHECK_NO1_SHUT_OK	BOOL			☐	☒	☐
21	VAR	CHECK_NO2_SHUT_OK	BOOL			☐	☒	☐
22	VAR	Circulation_Low_Speed_ESV	BOOL	%MW5.2		☐	☒	☐
23	VAR	Combustion_Air_Fan_Fault_ESV	BOOL	%MW4.13		☐	☒	☐
24	VAR	Combustion_Air_Fan_Run_ESV	BOOL	%MW4.2		☐	☒	☐
25	VAR	ECOR_TRIP	BOOL			☐	☒	☐
26	VAR	Emergency_Stop_ESV	BOOL	%MW5.1		☐	☒	☐
27	VAR	FAN_RUN	BOOL	%MW0.6		☐	☒	☐
28	VAR	FLAMON	BOOL			☐	☐	☐
29	VAR	Gas_Leak_Check_Switch_Fault_ESV	BOOL	%MW5.4		☐	☒	☐
30	VAR	Gas_Leak_PSH_ESV	BOOL	%MW4.5		☐	☒	☐
31	VAR	Gas_Leak_PSL_ESV	BOOL	%MW5.0		☐	☒	☐
32	VAR	Gas_Pressure_Hi_ESV	BOOL	%MW4.8		☐	☒	☐
33	VAR	Gas_Pressure_Low_ESV	BOOL	%MW5.3		☐	☒	☐
34	VAR	HIGH_GAS_LEAK_PRE	BOOL	%MW1.11		☐	☒	☐
35	VAR	HIGH_GAS_PRE	BOOL	%MW1.8		☐	☒	☐
36	VAR	HIGH_LIMIT	BOOL			☐	☒	☐
37	VAR	HIGH_SEVOR_CHECK	BOOL			☐	☒	☐
38	VAR	Hi_Fire_Limit_Switch_ESV	BOOL	%MW4.3		☐	☒	☐
39	VAR	Hi_Fire_Limit_Switch_Fault_ESV	BOOL	%MW4.12		☐	☒	☐
40	VAR	HMI	BOOL			☐	☐	☐

	HMI	Comment
1	☐	
2	☐	
3	☐	
4	☐	
5	☐	
6	☐	
7	☐	
8	☐	
9	☐	
10	☐	
11	☐	
12	☐	
13	☐	
14	☐	
15	☐	BURNER START PERMISSIVE
16	☐	EMEGENCY STOP
17	☐	BUTTON RESET
18	☐	
19	☐	
20	☐	
21	☐	
22	☐	
23	☐	
24	☐	
25	☐	
26	☐	
27	☐	LOW CIRCULATION FAN SPEED
28	☐	
29	☐	
30	☐	
31	☐	
32	☐	
33	☐	
34	☐	HIGH GAS LEAK PRESSURE CONTROL SWITCH
35	☐	HIGH GAS PRESSURE
36	☐	
37	☐	
38	☐	
39	☐	
40	☐	

	Variable Kind	Variable	Type	Address	Initial Value	Retain	Used	EIP/OPC UA
41	VAR	HPV_Temp	INT	%MW507		☐	☒	☐
42	VAR	HPV_Temp1	INT	%MW508		☐	☒	☐
43	VAR	INST	TON			☐	☒	☐
44	VAR	INST1	TON			☐	☒	☐
45	VAR	INST10	TON			☐	☒	☐
46	VAR	INST11	TON			☐	☒	☐
47	VAR	INST12	TON			☐	☒	☐
48	VAR	INST13	TON			☐	☒	☐
49	VAR	INST14	TON			☐	☒	☐
50	VAR	INST15	TON			☐	☐	☐
51	VAR	INST16	TON			☐	☒	☐
52	VAR	INST17	TON			☐	☒	☐
53	VAR	INST18	TON			☐	☒	☐
54	VAR	INST19	TON			☐	☒	☐
55	VAR	INST2	TON			☐	☒	☐
56	VAR	INST20	TON			☐	☐	☐
57	VAR	INST21	TON			☐	☒	☐
58	VAR	INST22	TON			☐	☒	☐
59	VAR	INST23	TON			☐	☐	☐
60	VAR	INST24	CTU_INT			☐	☐	☐
61	VAR	INST25	TON			☐	☐	☐
62	VAR	INST26	TON			☐	☐	☐
63	VAR	INST27	TON			☐	☐	☐
64	VAR	INST28	TON			☐	☐	☐
65	VAR	INST29	TON			☐	☐	☐
66	VAR	INST3	TON			☐	☒	☐
67	VAR	INST30	TON			☐	☐	☐
68	VAR	INST4	TON			☐	☒	☐
69	VAR	INST5	TON			☐	☒	☐
70	VAR	INST6	TON			☐	☐	☐
71	VAR	INST7	TON			☐	☐	☐
72	VAR	INST8	TON			☐	☒	☐
73	VAR	INST9	TON			☐	☒	☐
74	VAR	LOW_AIR_PRE	BOOL			☐	☒	☐
75	VAR	Low_Comb_Air_Fan_Pr_ESV	BOOL	%MW4.9		☐	☒	☐
76	VAR	LOW_FIRE	BOOL			☐	☒	☐
77	VAR	LOW_GAS_LEAK_PRE	BOOL	%MW1.10		☐	☒	☐
78	VAR	LOW_GAS_PRE	BOOL	%MW1.7		☐	☒	☐
79	VAR	LOW_LIMIT	BOOL			☐	☒	☐
80	VAR	LOW_LIMIT_CHECK_OK	BOOL			☐	☒	☐
81	VAR	Lo_Fire_Limit_Switch_ESV	BOOL	%MW4.14		☐	☒	☐
82	VAR	Lo_Fire_Limit_Switch_Fault_ESV	BOOL	%MW5.7		☐	☒	☐
83	VAR	Main_Burner_Miss_Fire_ESV	BOOL	%MW5.6		☐	☒	☐
84	VAR	MAIN_BURNER_START	BOOL			☐	☒	☐
85	VAR	Main_Gas_Shutoff_ESV	BOOL	%MW4.15		☐	☒	☐
86	VAR	MAIN_PANEL_READY	BOOL			☐	☒	☐
87	VAR	Man_Auto_GZ900	INT	%MW101		☐	☒	☐
88	VAR	Man_MV_GZ900	INT	%MW100		☐	☒	☐
89	VAR	MG	BOOL			☐	☒	☐

	HMI	Comment
41	☐	
42	☐	
43	☐	
44	☐	
45	☐	
46	☐	
47	☐	
48	☐	
49	☐	
50	☐	
51	☐	
52	☐	
53	☐	
54	☐	
55	☐	
56	☐	
57	☐	
58	☐	
59	☐	
60	☐	
61	☐	
62	☐	
63	☐	
64	☐	
65	☐	
66	☐	
67	☐	
68	☐	
69	☐	
70	☐	
71	☐	
72	☐	
73	☐	
74	☐	
75	☐	
76	☐	
77	☐	LOW GAS LEAK PRESSURE CONTROL SWITCH
78	☐	LOW GAS PRESSURE
79	☐	
80	☐	
81	☐	
82	☐	
83	☐	
84	☐	
85	☐	
86	☐	
87	☐	
88	☐	
89	☐	

	Variable Kind	Variable	Type	Address	Initial Value	Retain	Used	EIP/OPC UA
90	VAR	MG1	BOOL	%MW0.4		☐	☒	☐
91	VAR	MG2	BOOL	%MW0.5		☐	☐	☐
92	VAR	MV_GZ900_OUT	INT			☐	☒	☐
93	VAR	MU20	WORD			☐	☐	☐
94	VAR	mu4	WORD			☐	☐	☐
95	VAR	NO1_ECOR_TRIP	BOOL	%MW0.2		☐	☒	☐
96	VAR	NO1_FLAME_ON	BOOL	%MW1.14		☐	☒	☐
97	VAR	NO1_HIGH_LIMIT	BOOL	%MW1.1		☐	☒	☐
98	VAR	NO1_LOW_AIR_PRE	BOOL	%MW1.9		☐	☒	☐
99	VAR	NO1_LOW_LIMIT	BOOL	%MW1.0		☐	☒	☐
100	VAR	NO1_SHUT_CHECK	BOOL			☐	☒	☐
101	VAR	NO1_SHUT_OFF_SW	BOOL	%MW1.13		☐	☒	☐
102	VAR	NO2_ECOR_TRIP	BOOL	%MW0.3		☐	☒	☐
103	VAR	NO2_FLAME_ON	BOOL	%MW1.15		☐	☐	☐
104	VAR	NO2_HIGH_LIMIT	BOOL	%MW1.3		☐	☐	☐
105	VAR	NO2_LOW_AIR_PRE	BOOL	%MW1.12		☐	☐	☐
106	VAR	NO2_LOW_LIMIT	BOOL	%MW1.2		☐	☐	☐
107	VAR	NO2_SHUT_CHECK	BOOL			☐	☒	☐
108	VAR	NO_READY	BOOL			☐	☐	☐
109	VAR	O502	BOOL	%MW3.0		☐	☒	☐
110	VAR	O503	BOOL	%MW3.1		☐	☒	☐
111	VAR	O504	BOOL	%MW3.2		☐	☐	☐
112	VAR	O505	BOOL	%MW3.3		☐	☐	☐
113	VAR	O506	BOOL	%MW3.4		☐	☒	☐
114	VAR	O507	BOOL	%MW3.5		☐	☒	☐
115	VAR	O508	BOOL	%MW3.6		☐	☒	☐
116	VAR	O509	BOOL	%MW3.7		☐	☒	☐
117	VAR	O510	BOOL	%MW3.8		☐	☒	☐
118	VAR	O511	BOOL	%MW3.9		☐	☒	☐
119	VAR	O512	BOOL	%MW3.10		☐	☒	☐
120	VAR	O513	BOOL	%MW3.11		☐	☐	☐
121	VAR	O514	BOOL	%MW3.12		☐	☒	☐
122	VAR	O515	BOOL	%MW3.13		☐	☐	☐
123	VAR	O516	BOOL	%MW3.14		☐	☐	☐
124	VAR	O517	BOOL	%MW3.15		☐	☐	☐
125	VAR	O518	BOOL	%MW2.14		☐	☒	☐
126	VAR	O519	BOOL	%MW2.15		☐	☒	☐
127	VAR	Operation_Remote_Mode_ESV	BOOL	%MW4.6		☐	☒	☐
128	VAR	Pilot_Burner_Miss_Fire_ESV	BOOL	%MW4.11		☐	☒	☐
129	VAR	PILOT_INR	BOOL			☐	☒	☐
130	VAR	Pilot_Valve_ESV	BOOL	%MW4.4		☐	☒	☐
131	VAR	PV_GZ900	INT	%MW103		☐	☒	☐
132	VAR	PV_GZ900_OUT	INT			☐	☒	☐
133	VAR	Ready_ESV	BOOL	%MW4.0		☐	☒	☐
134	VAR	Remote_ESV	BOOL	%MW4.1		☐	☒	☐
135	VAR	RE_RESET	BOOL	%MW1.6		☐	☒	☐
136	VAR	RE_START	BOOL	%MW1.4		☐	☒	☐
137	VAR	RMV_GZ900	INT	%MW104		☐	☒	☐
138	VAR	START	BOOL			☐	☒	☐
139	VAR	STOP	BOOL	%MW6.0		☐	☒	☐
140	VAR	STOP_BURNER	BOOL			☐	☒	☐
141	VAR	SV_GZ900	INT	%MW102		☐	☒	☐

	HMI	Comment
90	☐	#1 COMBUSTION FAN RUN
91	☐	#2 COMBUSTION FAN RUN
92	☐	
93	☐	
94	☐	
95	☐	#1 FAN ECOR TRIP
96	☐	#1 BURNER FLAME ON SIGNAL
97	☐	#1 HIGH FIRE LIMIT SWITCH
98	☐	#1 LOW COMBUSTION AIR PRESSURE
99	☐	#1 LOW FIRE LIMIT SWITCH
100	☐	
101	☐	#1 MAIN SHUT_OFF VAVLE CLOSED LIMIT SWITCH
102	☐	#2 FAN ECOR TRIP
103	☐	#2 BURNER FLAME ON SIGNAL
104	☐	#2 HIGH FIRE LIMIT SWITCH
105	☐	#2 LOW COMBUSTION AIR PRESSURE
106	☐	#2 LOW FIRE LIMIT SWITCH
107	☐	
108	☐	
109	☐	BURNER LOAD UP
110	☐	LOW CIRCULATION FAN SPEED
111	☐	BURNER START
112	☐	
113	☐	HIGH TEMPERATURE
114	☐	MISS FIRE
115	☐	HIGH GAS PRESSURE
116	☐	LOW GAS PRESSURE
117	☐	GAS LEAK FAULT
118	☐	PURGE START
119	☐	PURGE END
120	☐	NO 1 LOW COMBUSTION FAN PRESSURE
121	☐	NO 1 LOW COMBUSTION FAN RUNNING
122	☐	NO 2 LOW COMBUSTION FAN PRESSURE
123	☐	NO 2 LOW COMBUSTION FAN RUNNING
124	☐	
125	☐	NO.01 COMBUSTION FAN ECOR TRIP
126	☐	NO.02 COMBUSTION FAN ECOR TRIP
127	☐	
128	☐	
129	☐	
130	☐	
131	☐	
132	☐	
133	☐	
134	☐	
135	☐	REMOTE RESET
136	☐	REMOTE START
137	☐	
138	☐	
139	☐	
140	☐	
141	☐	

	Variable Kind	Variable	Type	Address	Initial Value	Retain	Used	EIP/OPC UA
142	VAR	SV_THIC_Data	INT	%MW506		☐	☒	☐
143	VAR	SV_TIC_Data	INT	%MW505		☐	☒	☐
144	VAR	temp1	INT			☐	☒	☐
145	VAR	temp2	INT			☐	☒	☐
146	VAR	Temp_high_ESV	BOOL	%MW4.7		☐	☒	☐
147	VAR	WMV_GZ900	INT	%MW504		☐	☒	☐
148	VAR	WPV	INT	%MW520		☐	☐	☐
149	VAR	WPV_GZ900	INT	%MW503		☐	☒	☐
150	VAR_EXTERNA	_0006_CH0_DATA	INT	%UW0.6.3		☐	☒	☐
151	VAR_EXTERNA L	_0006_CH0_OUTEN	BOOL	%UX0.6.32		☐	☒	☐
152	VAR_EXTERNA	_0006_CH1_DATA	INT	%UW0.6.4		☐	☒	☐
153	VAR_EXTERNA L	_0006_CH1_OUTEN	BOOL	%UX0.6.33		☐	☒	☐
154	VAR_EXTERNA	_0006_CH2_DATA	INT	%UW0.6.5		☐	☒	☐
155	VAR_EXTERNA L	_0006_CH2_OUTEN	BOOL	%UX0.6.34		☐	☒	☐
156	VAR_EXTERNA	_0007_CH0_ACT	BOOL	%UX0.7.16		☐	☒	☐
157	VAR_EXTERNA	_0007_CH0_DATA	INT	%UW0.7.2		☐	☒	☐
158	VAR_EXTERNA	_0007_CH1_ACT	BOOL	%UX0.7.17		☐	☒	☐
159	VAR_EXTERNA	_0007_CH1_DATA	INT	%UW0.7.3		☐	☒	☐
160	VAR_EXTERNA	_0008_CH0_ACT	BOOL	%UX0.8.16		☐	☒	☐
161	VAR_EXTERNA	_0008_CH0_TEMP	INT	%UW0.8.4		☐	☒	☐
162	VAR	_1ST_Valve_Gas_leak_ESV	BOOL	%MW4.10		☐	☒	☐
163	VAR	_2ND_Valve_Gas_leak_ESV	BOOL	%MW5.5		☐	☒	☐

	HMI	Comment
142	☐	
143	☐	
144	☐	
145	☐	
146	☐	
147	☐	
148	☐	
149	☐	
150	☐	Analog Output Module: CH0 Input
151	☐	Analog Output Module: CH0 Output Enable
152	☐	Analog Output Module: CH1 Input
153	☐	Analog Output Module: CH1 Output Enable
154	☐	Analog Output Module: CH2 Input
155	☐	Analog Output Module: CH2 Output Enable
156	☐	Analog Input Module: CH0 Activation Status
157	☐	Analog Input Module: CH0 Output
158	☐	Analog Input Module: CH1 Activation Status
159	☐	Analog Input Module: CH1 Output
160	☐	Temp. Measuring Module: CH0 Activation Status
161	☐	Temp. Measuring Module: CH0 Temp. Data
162	☐	
163	☐	

Comment: ########## SLOT DI0.2.0, SLOT QD0.3.0, QD0.4.0 ##########

L1 L2 L3

MOVE (EN, ENO) — %ID0.2.0 → IN, OUT → %MD0

MOVE (EN, ENO) — %MW2 → IN, OUT → %QW0.4.0

MOVE (EN, ENO) — %MW3 → IN, OUT → %QW0.5.0

Comment: ########### INPUT MANUAL OUTPUT1 ##########
########### AUTO/MAIN ##########

L5 L6 L7

%MW0.1 P B_RESET
%MW1.6 P RE_RESET

MOVE (EN, ENO) — 1 → IN, OUT → %MW501

MOVE (EN, ENO) — 0 → IN, OUT → %MW500

L8 L9 L10

MOVE (EN, ENO) — %MW500 → IN, OUT → %MW100 Man_MV_GZ900

MOVE (EN, ENO) — %MW501 → IN, OUT → %MW101 Man_Auto_GZ900

MOVE (EN, ENO) — %MW502 → IN, OUT → %MW102 SV_GZ900

L11 L12 L13

MOVE (EN, ENO) — %MW103 PV_GZ900 → IN, OUT → %MW503 WPV_GZ900

MOVE (EN, ENO) — %MW104 RMV_GZ900 → IN, OUT → %MW504 WMV_GZ900

L14 L15 L16 L17 L18 L19 L20

SCALE (EN, ENO)
- %MW504 WMV_GZ900 → X
- STAT
- 900 → X_max
- Y → %MW504 WMV_GZ900
- 0 → X_min
- 100 → Y_max
- 0 → Y_min

Comment: ##REMOTE/LOCAL##

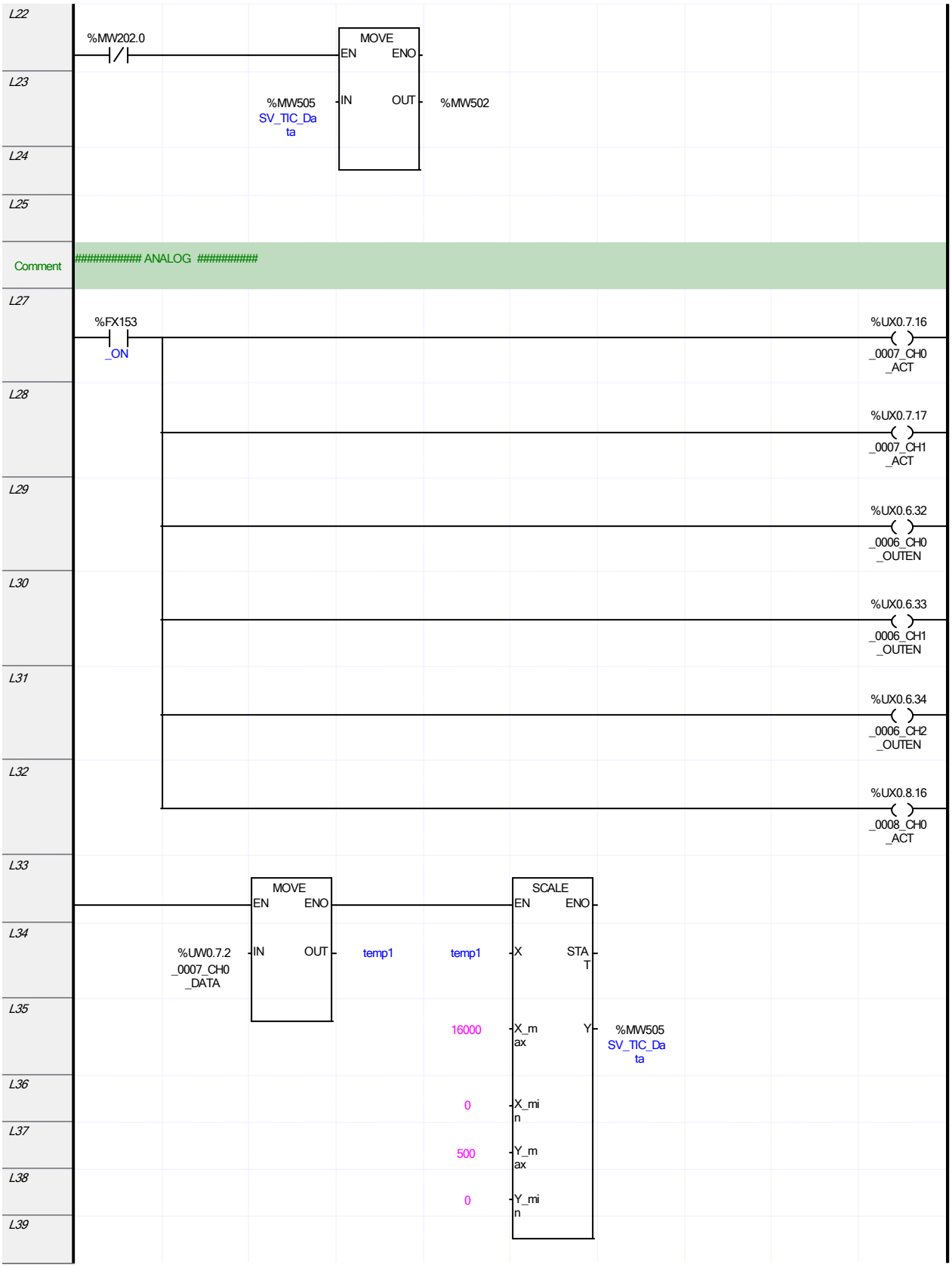
L22
%MW202.0
MOVE
EN
ENO
L23
%MW505
SV_TIC_Da
ta
IN
OUT
%MW502
L24
L25
Comment
########### ANALOG ##########
L27
%FX153
_ON
%UX0.7.16
_0007_CH0
_ACT
L28
%UX0.7.17
_0007_CH1
_ACT
L29
%UX0.6.32
_0006_CH0
_OUTEN
L30
%UX0.6.33
_0006_CH1
_OUTEN
L31
%UX0.6.34
_0006_CH2
_OUTEN
L32
%UX0.8.16
_0008_CH0
_ACT
L33
MOVE
EN
ENO
L34
%UW0.7.2
_0007_CH0
_DATA
IN
OUT
temp1
temp1
SCALE
EN
ENO
X
STA
T
L35
16000
X_m
ax
Y
%MW505
SV_TIC_Da
ta
L36
0
X_mi
n
L37
500
Y_m
ax
L38
0
Y_mi
n
L39

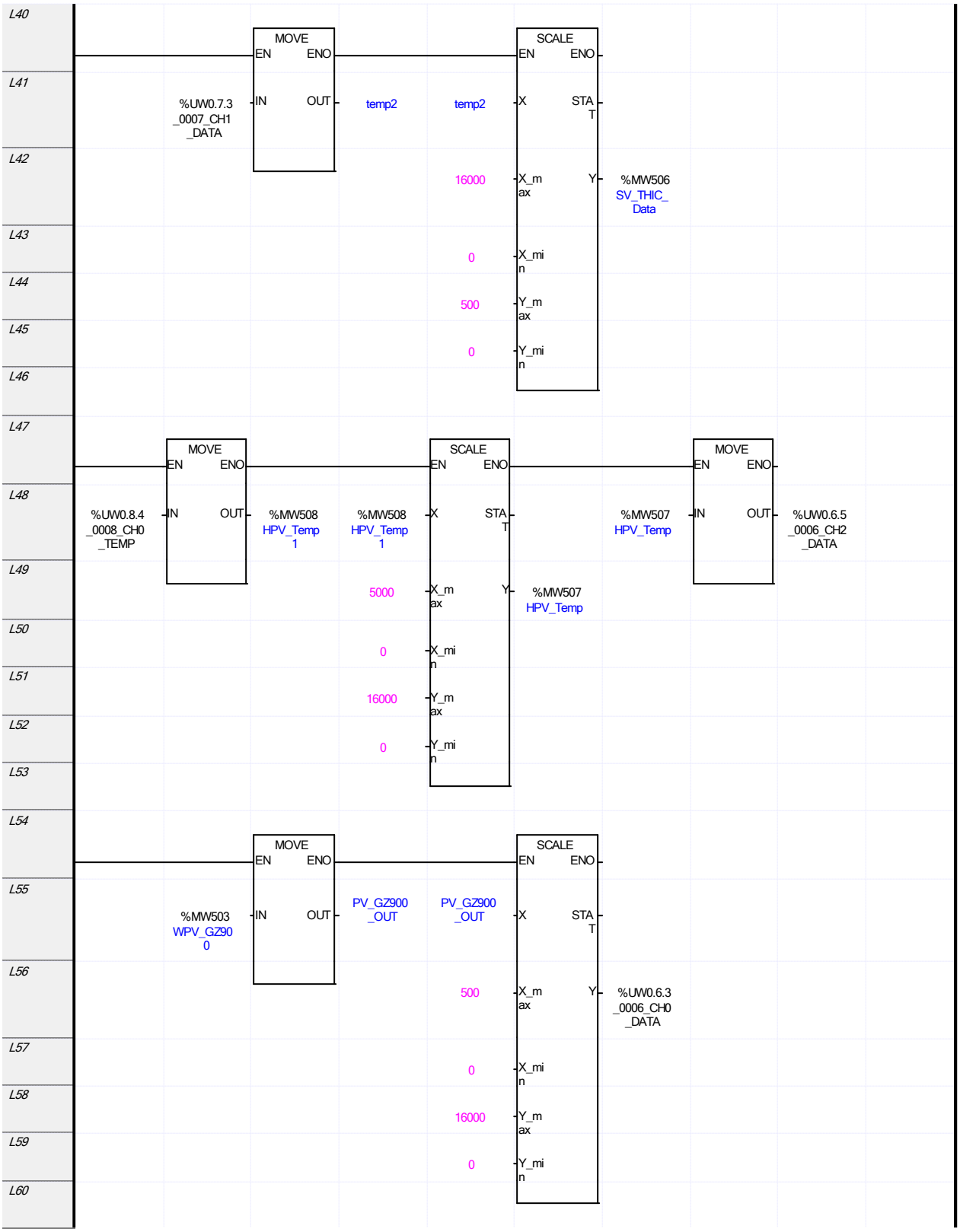
L40
MOVE
EN ENO
L41
%UW0.7.3
_0007_CH1
_DATA
IN OUT
temp2
temp2
SCALE
EN ENO
X STA
T
L42
16000
X_m
ax
Y
%MW506
SV_THIC_
Data
L43
0
X_mi
n
L44
500
Y_m
ax
L45
0
Y_mi
n
L46
L47
MOVE
EN ENO
L48
%UW0.8.4
_0008_CH0
_TEMP
IN OUT
%MW508
HPV_Temp
1
%MW508
HPV_Temp
1
SCALE
EN ENO
X STA
T
%MW507
HPV_Temp
MOVE
EN ENO
IN OUT
%UW0.6.5
_0006_CH2
_DATA
L49
5000
X_m
ax
Y
%MW507
HPV_Temp
L50
0
X_mi
n
L51
16000
Y_m
ax
L52
0
Y_mi
n
L53
L54
MOVE
EN ENO
L55
%MW503
WPV_GZ90
0
IN OUT
PV_GZ900
_OUT
PV_GZ900
_OUT
SCALE
EN ENO
X STA
T
L56
500
X_m
ax
Y
%UW0.6.3
_0006_CH0
_DATA
L57
0
X_mi
n
L58
16000
Y_m
ax
L59
0
Y_mi
n
L60

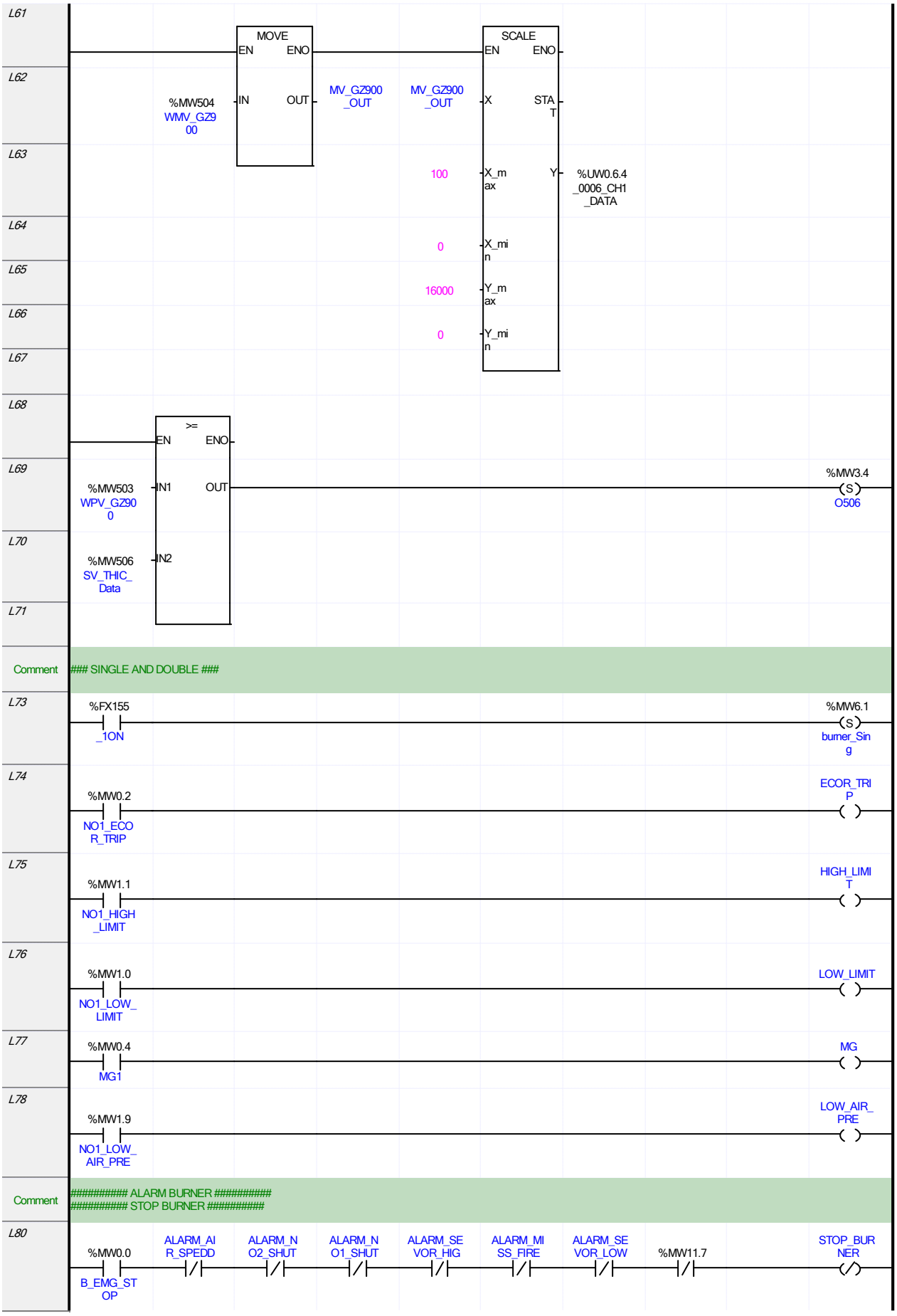
L61
MOVE
EN ENO
L62
%MW504
WMV_GZ9
00
IN OUT
MV_GZ900
_OUT
MV_GZ900
_OUT
SCALE
EN ENO
X STA
T
L63
100
X_m
ax
Y
%UW0.6.4
_0006_CH1
_DATA
L64
0
X_mi
n
L65
16000
Y_m
ax
L66
0
Y_mi
n
L67
L68
>=
EN ENO
L69
%MW503
WPV_GZ90
0
IN1 OUT
%MW3.4
S
O506
L70
%MW506
SV_THIC_
Data
IN2
L71
Comment
SINGLE AND DOUBLE
L73
%FX155
_1ON
%MW6.1
S
burner_Sin
g
L74
%MW0.2
NO1_ECO
R_TRIP
ECOR_TRI
P
L75
%MW1.1
NO1_HIGH
_LIMIT
HIGH_LIMI
T
L76
%MW1.0
NO1_LOW_
LIMIT
LOW_LIMIT
L77
%MW0.4
MG1
MG
L78
%MW1.9
NO1_LOW_
AIR_PRE
LOW_AIR_
PRE
Comment
########## ALARM BURNER ##########
########## STOP BURNER ##########
L80
%MW0.0
B_EMG_ST
OP
ALARM_AI
R_SPEDD
ALARM_N
O2_SHUT
ALARM_N
O1_SHUT
ALARM_SE
VOR_HIG
ALARM_MI
SS_FIRE
ALARM_SE
VOR_LOW
%MW11.7
STOP_BUR
NER

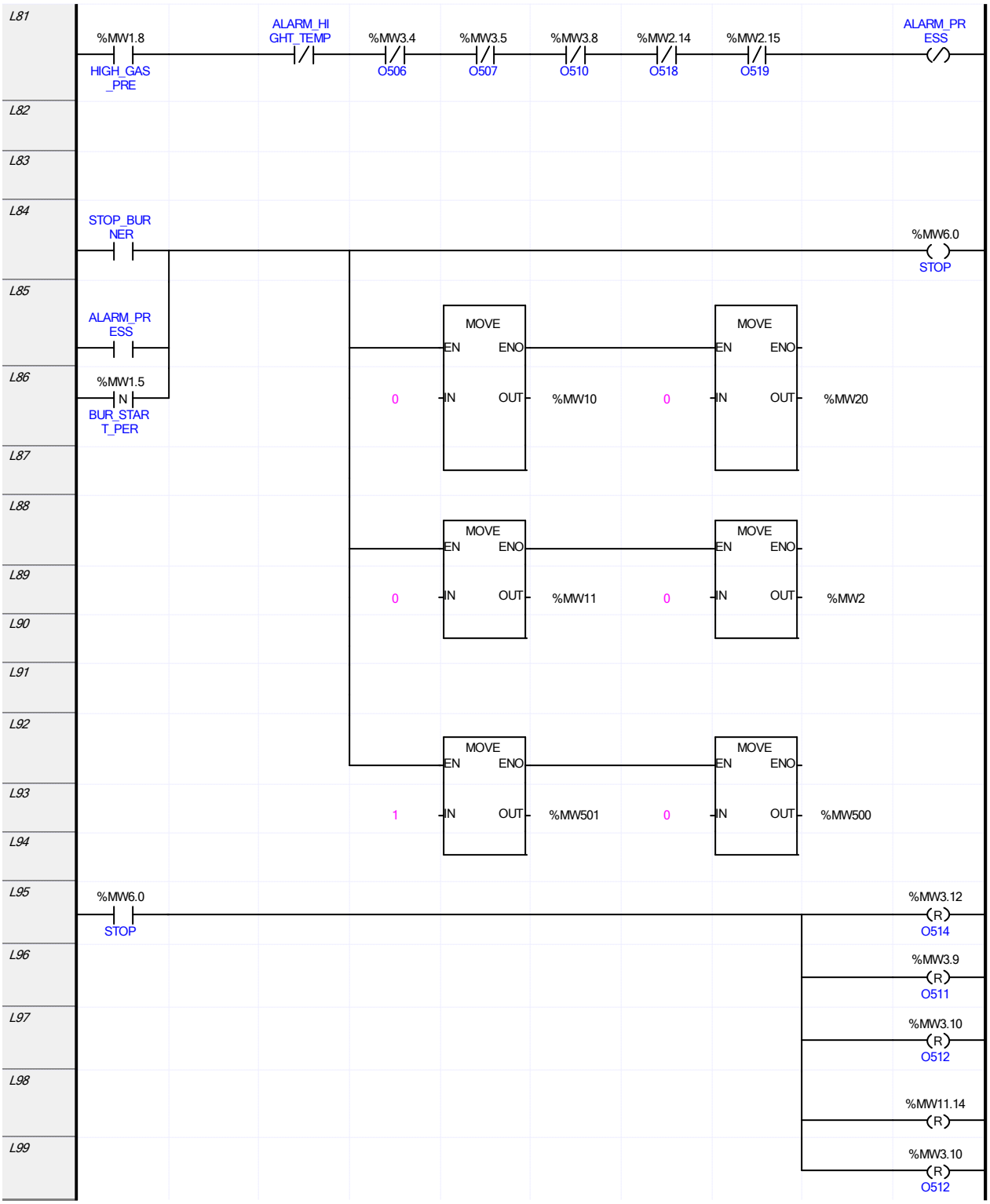
L81
%MW1.8
HIGH_GAS_PRE
ALARM_HIGHT_TEMP
%MW3.4
O506
%MW3.5
O507
%MW3.8
O510
%MW2.14
O518
%MW2.15
O519
ALARM_PRESS
L82
L83
L84
STOP_BURNER
%MW6.0
STOP
L85
ALARM_PRESS
L86
%MW1.5
BUR_START_PER
L87
L88
L89
L90
L91
L92
L93
L94
MOVE
EN ENO
IN OUT
0
%MW10
%MW20
%MW11
%MW2
1
%MW501
%MW500
L95
%MW6.0
STOP
%MW3.12
O514
L96
%MW3.9
O511
L97
%MW3.10
O512
L98
%MW11.14
L99
%MW3.10
O512

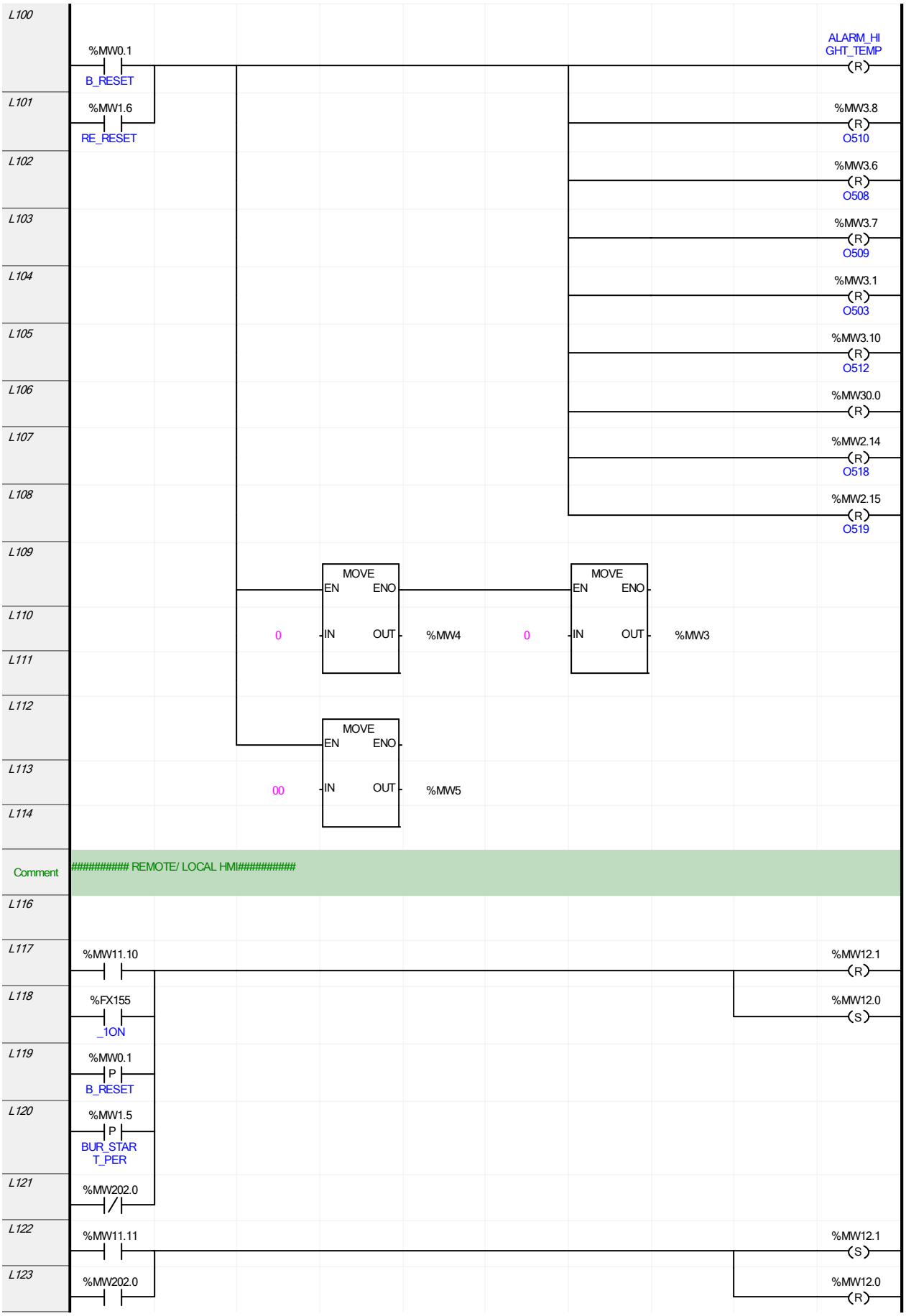
L100
%MW0.1
B_RESET
ALARM_HIGHT_TEMP
(R)
L101
%MW1.6
RE_RESET
%MW3.8
(R)
O510
L102
%MW3.6
(R)
O508
L103
%MW3.7
(R)
O509
L104
%MW3.1
(R)
O503
L105
%MW3.10
(R)
O512
L106
%MW30.0
(R)
L107
%MW2.14
(R)
O518
L108
%MW2.15
(R)
O519
L109
MOVE
EN ENO
L110
0
IN OUT
%MW4
0
IN OUT
%MW3
L111
L112
MOVE
EN ENO
L113
00
IN OUT
%MW5
L114
Comment
########## REMOTE/ LOCAL HMI##########
L116
L117
%MW11.10
%MW12.1
(R)
L118
%FX155
_1ON
%MW12.0
(S)
L119
%MW0.1
P
B_RESET
L120
%MW1.5
P
BUR_START_PER
L121
%MW202.0
L122
%MW11.11
%MW12.1
(S)
L123
%MW202.0
%MW12.0
(R)

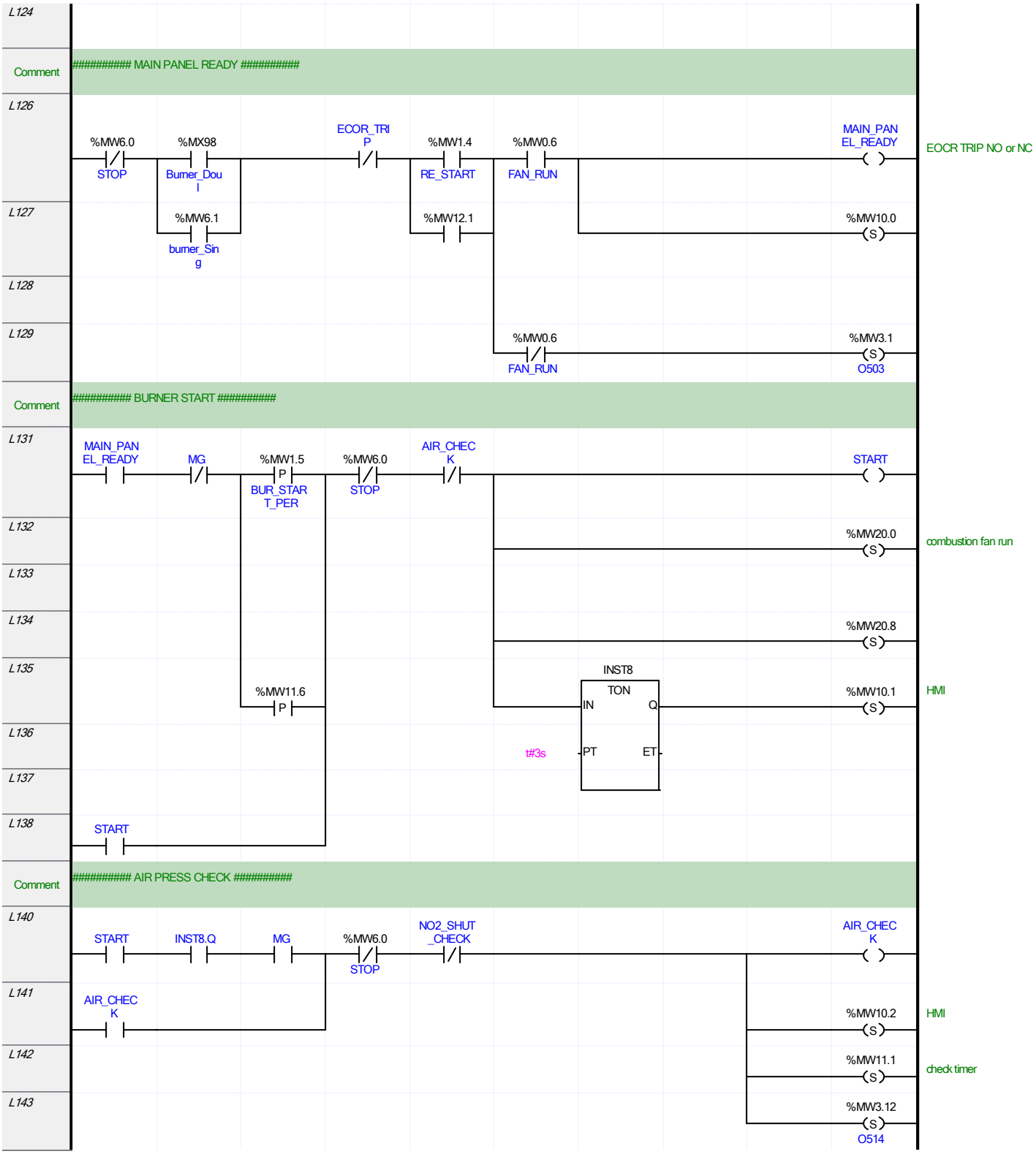
L124
Comment
########## MAIN PANEL READY ##########
L126
%MW6.0
STOP
%MX98
Burner_Dou
l
ECOR_TRI
P
%MW1.4
RE_START
%MW0.6
FAN_RUN
MAIN_PAN
EL_READY
EOCR TRIP NO or NC
L127
%MW6.1
burner_Sin
g
%MW12.1
%MW10.0
L128
L129
%MW0.6
FAN_RUN
%MW3.1
O503
Comment
########## BURNER START ##########
L131
MAIN_PAN
EL_READY
MG
%MW1.5
BUR_STAR
T_PER
%MW6.0
STOP
AIR_CHEC
K
START
L132
%MW20.0
combustion fan run
L133
L134
%MW20.8
L135
%MW11.6
INST8
TON
IN
Q
PT
ET
t#3s
%MW10.1
HMI
L136
L137
L138
START
Comment
########## AIR PRESS CHECK ##########
L140
START
INST8.Q
MG
%MW6.0
STOP
NO2_SHUT
_CHECK
AIR_CHEC
K
L141
AIR_CHEC
K
%MW10.2
HMI
L142
%MW11.1
check timer
L143
%MW3.12
O514

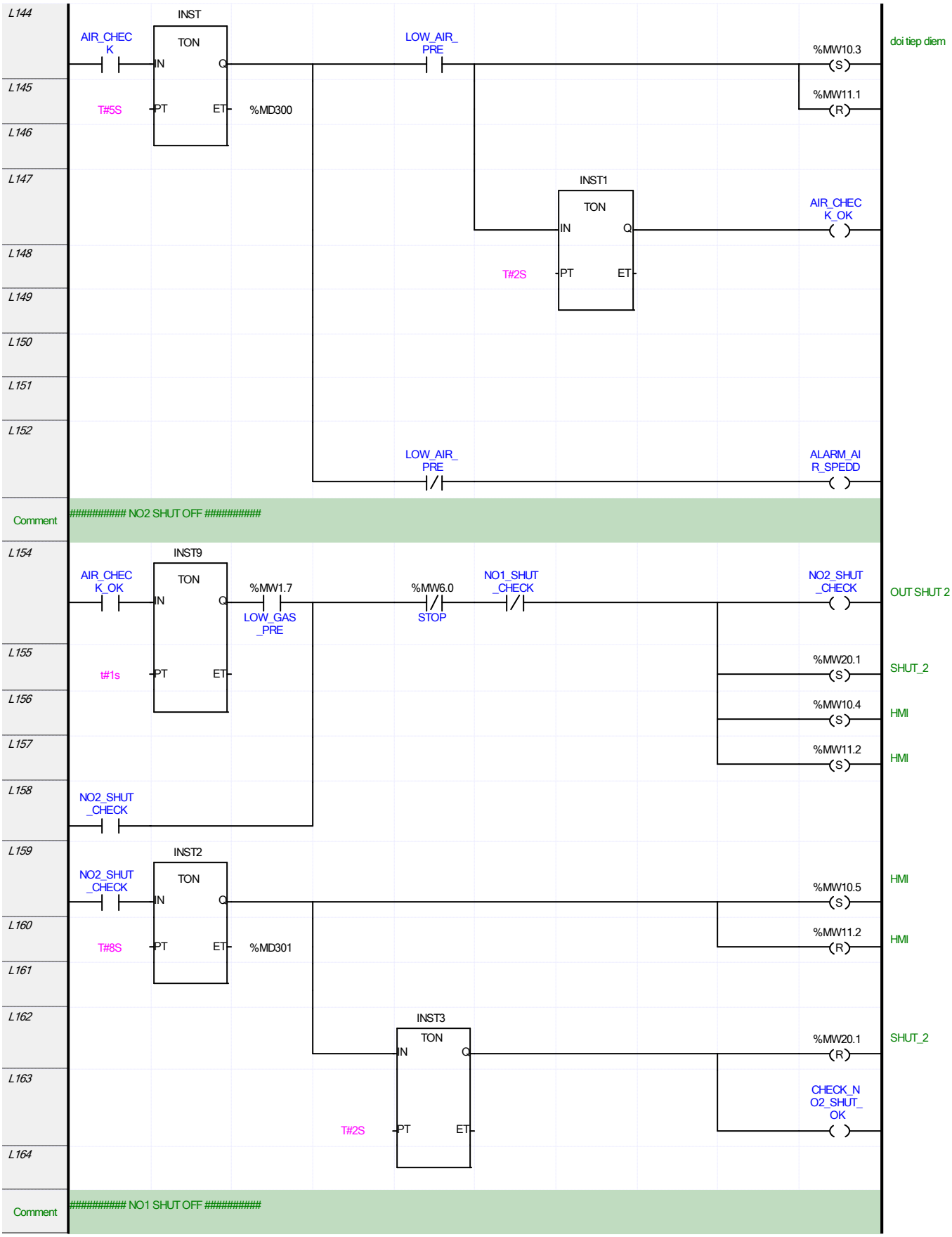
L144
L145
L146
L147
L148
L149
L150
L151
L152
Comment
L154
L155
L156
L157
L158
L159
L160
L161
L162
L163
L164
Comment
INST
TON
AIR_CHECK
IN
Q
T#5S
PT
ET
%MD300
LOW_AIR_PRE
%MW10.3
S
%MW11.1
R
doi tiep diem
INST1
TON
IN
Q
T#2S
PT
ET
AIR_CHECK_OK
LOW_AIR_PRE
ALARM_AIR_SPEDD
########### NO2 SHUT OFF ###########
INST9
TON
AIR_CHECK_OK
IN
Q
t#1s
PT
ET
%MW1.7
LOW_GAS_PRE
%MW6.0
STOP
NO1_SHUT_CHECK
NO2_SHUT_CHECK
OUT SHUT 2
%MW20.1
SHUT_2
%MW10.4
HMI
%MW11.2
HMI
NO2_SHUT_CHECK
INST2
TON
NO2_SHUT_CHECK
IN
Q
T#8S
PT
ET
%MD301
%MW10.5
HMI
%MW11.2
HMI
INST3
TON
IN
Q
T#2S
PT
ET
%MW20.1
SHUT_2
CHECK_NO2_SHUT_OK
########### NO1 SHUT OFF ###########

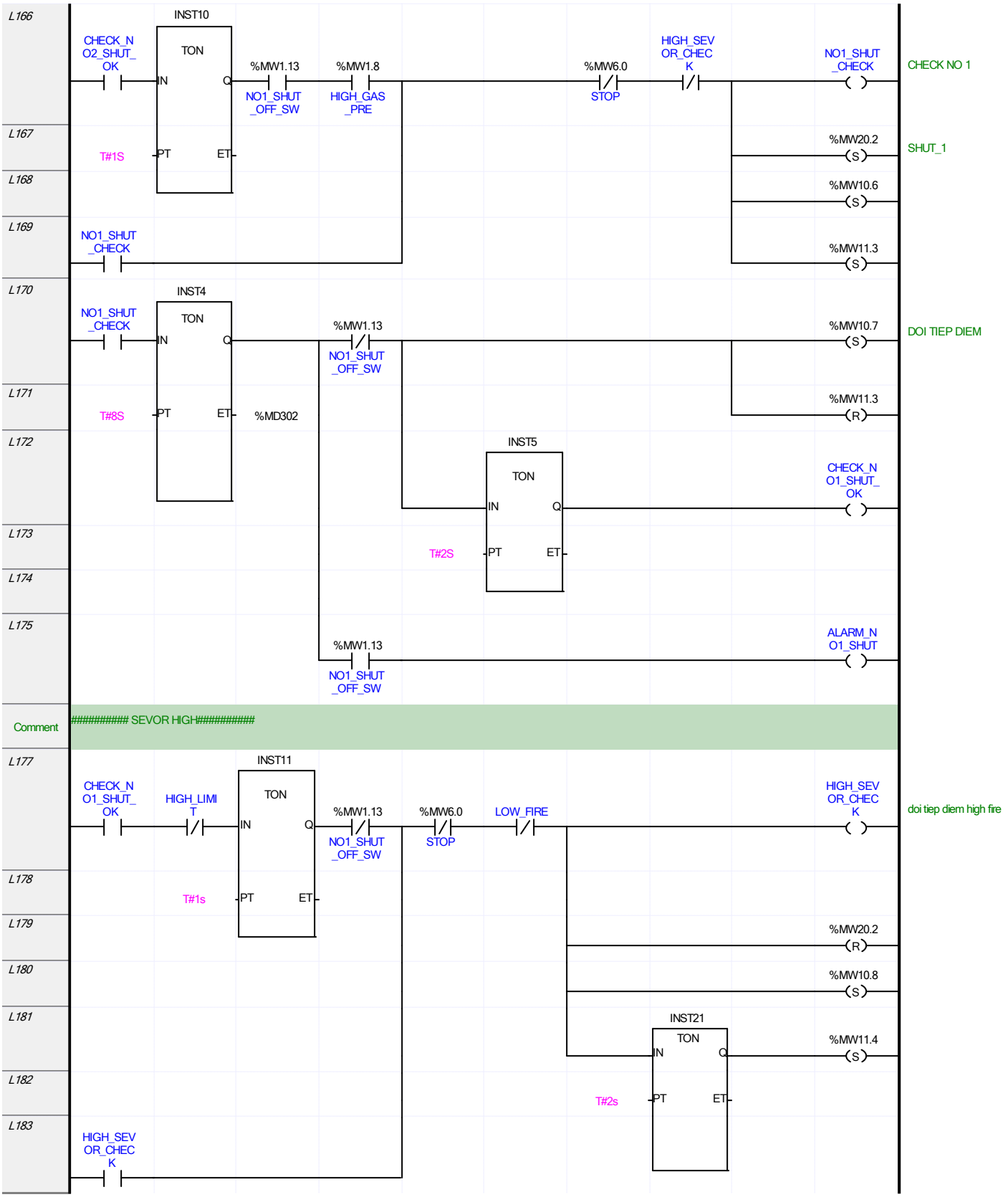
L166
INST10
TON
CHECK_NO2_SHUT_OK
IN
Q
%MW1.13
NO1_SHUT_OFF_SW
%MW1.8
HIGH_GAS_PRE
%MW6.0
STOP
HIGH_SEVOR_CHECK
NO1_SHUT_CHECK
CHECK NO 1
L167
T#1S
PT
ET
%MW20.2
SHUT_1
L168
%MW10.6
L169
NO1_SHUT_CHECK
%MW11.3
L170
INST4
TON
NO1_SHUT_CHECK
IN
Q
%MW1.13
NO1_SHUT_OFF_SW
%MW10.7
DOI TIEP DIEM
L171
T#8S
PT
ET
%MD302
%MW11.3
L172
INST5
TON
IN
Q
CHECK_NO1_SHUT_OK
L173
T#2S
PT
ET
L174
L175
%MW1.13
NO1_SHUT_OFF_SW
ALARM_NO1_SHUT
Comment
########### SEVOR HIGH###########
L177
INST11
TON
CHECK_NO1_SHUT_OK
HIGH_LIMIT
IN
Q
%MW1.13
NO1_SHUT_OFF_SW
%MW6.0
STOP
LOW_FIRE
HIGH_SEVOR_CHECK
doi tiep diem high fire
L178
T#1s
PT
ET
L179
%MW20.2
L180
%MW10.8
L181
INST21
TON
IN
Q
%MW11.4
L182
T#2s
PT
ET
L183
HIGH_SEVOR_CHECK

L184
L185
L186
L187
L188
L189
L190
L191
L192
L193
L194
L195

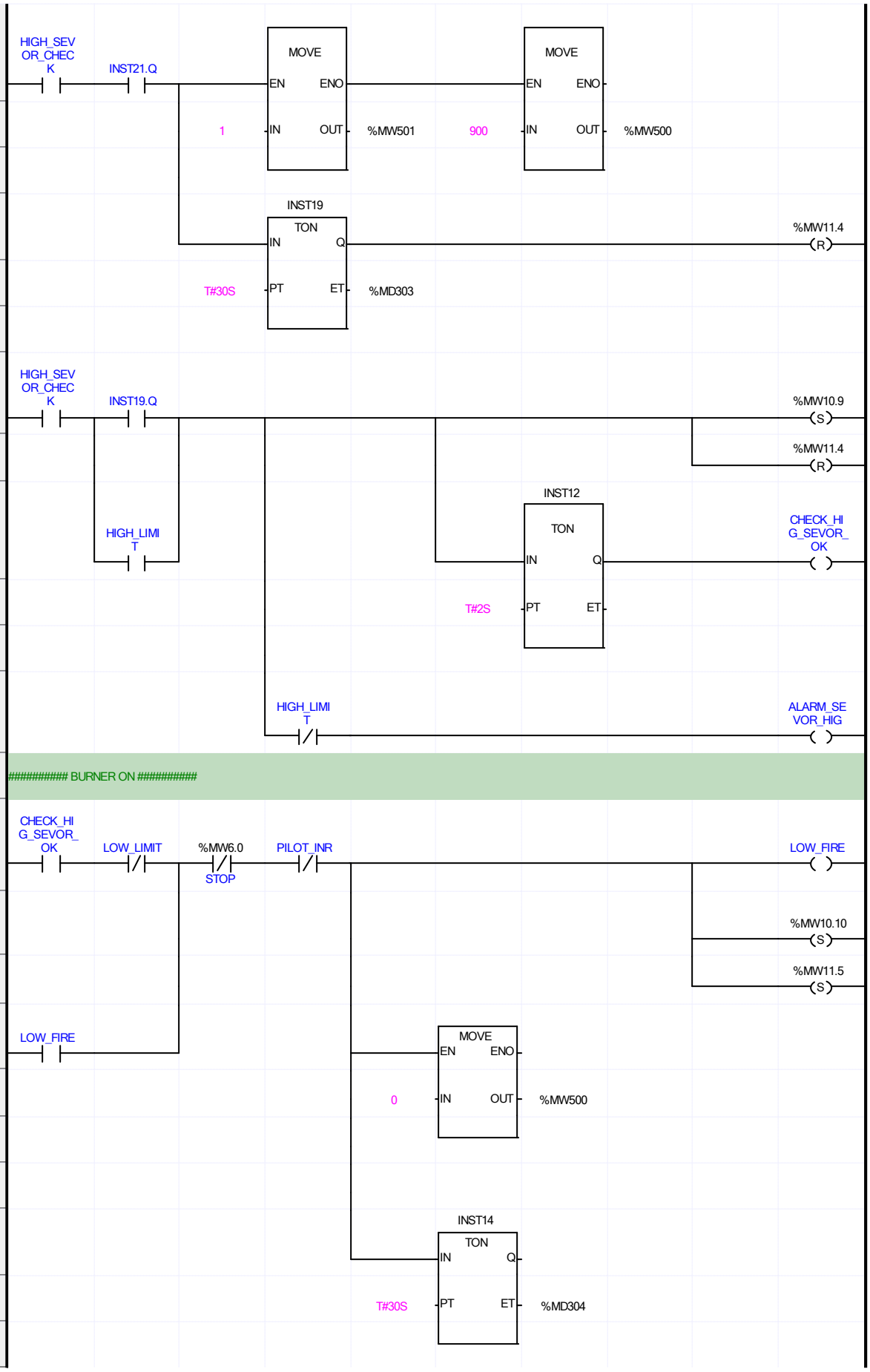

L197
L198
L199
L200
L201
L202
L203
L204
L205
L206

L207
L208
L209
L210
L211
L212
L213

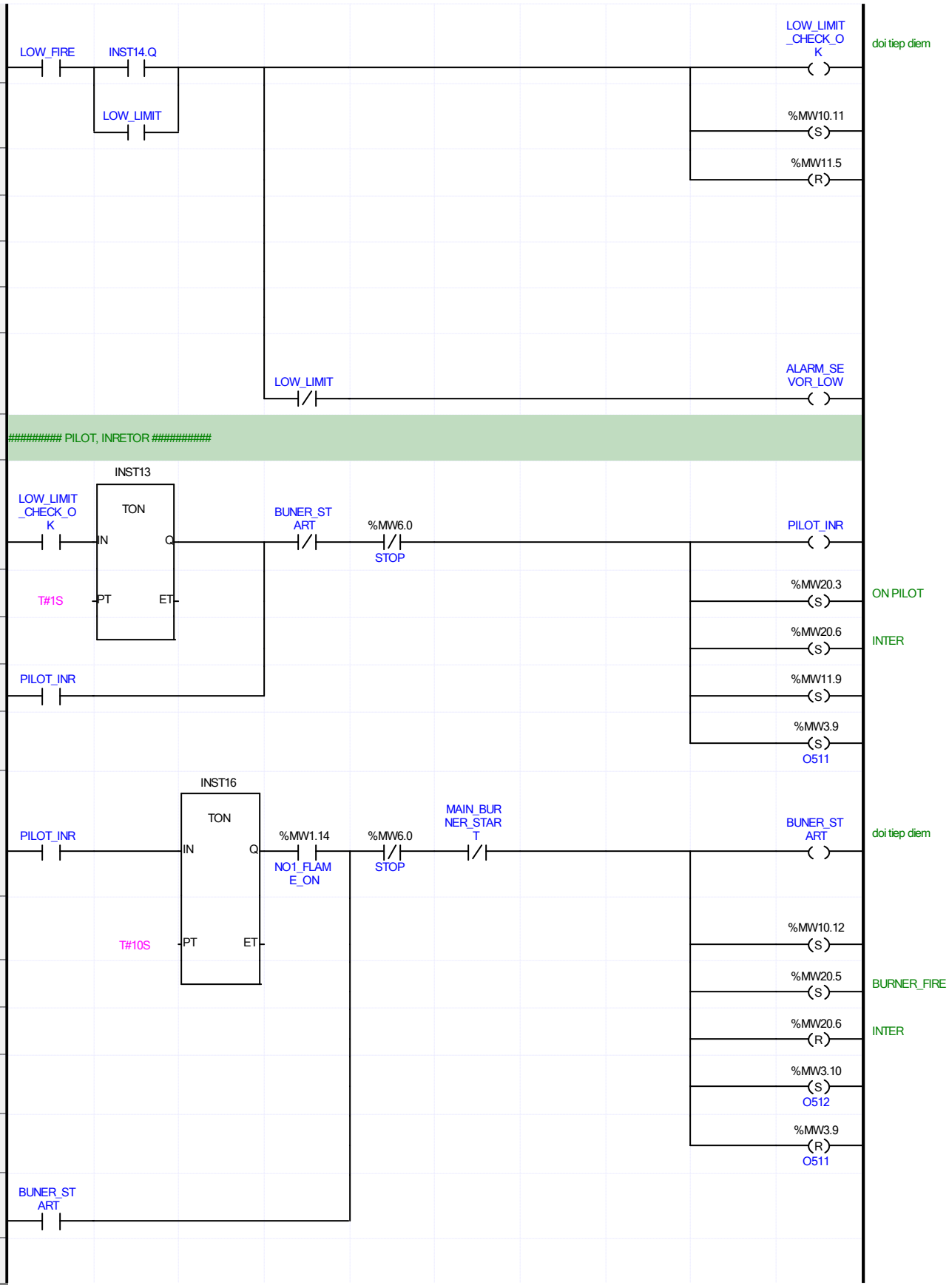

L215
L216
L217
L218
L219
L220
L221
L222
L223
L224
L225
L226
L227

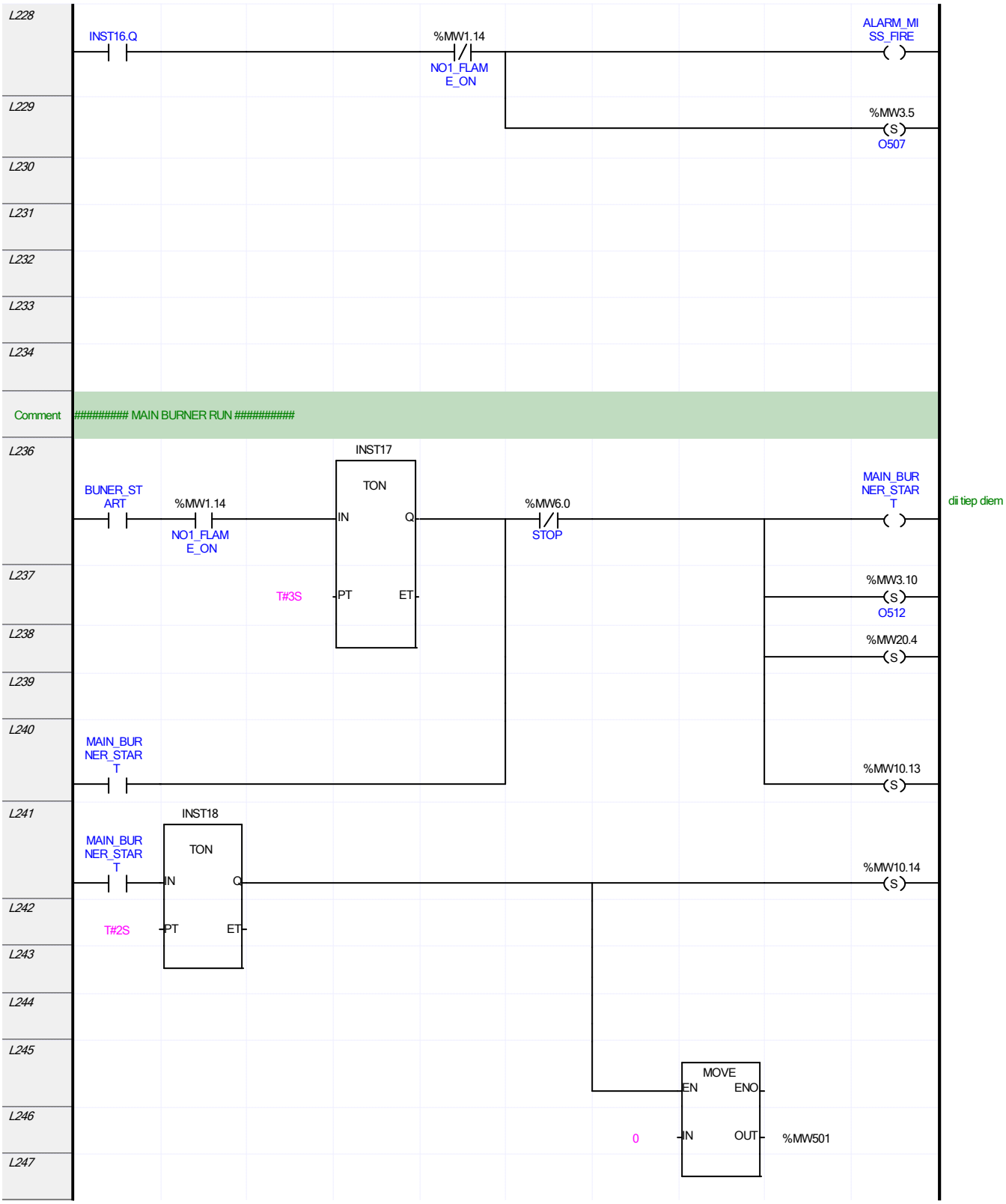
L228
INST16.Q
%MW1.14
NO1_FLAME_ON
ALARM_MISS_FIRE
L229
%MW3.5
O507
L230
L231
L232
L233
L234
Comment
######### MAIN BURNER RUN ##########
L236
INST17
TON
BUNER_START
%MW1.14
NO1_FLAME_ON
IN
Q
T#3S
PT
ET
%MW6.0
STOP
MAIN_BURNER_START
dii tiep diem
L237
%MW3.10
O512
L238
%MW20.4
L239
L240
MAIN_BURNER_START
%MW10.13
L241
INST18
TON
MAIN_BURNER_START
IN
Q
%MW10.14
L242
T#2S
PT
ET
L243
L244
L245
MOVE
EN
ENO
L246
0
IN
OUT
%MW501
L247

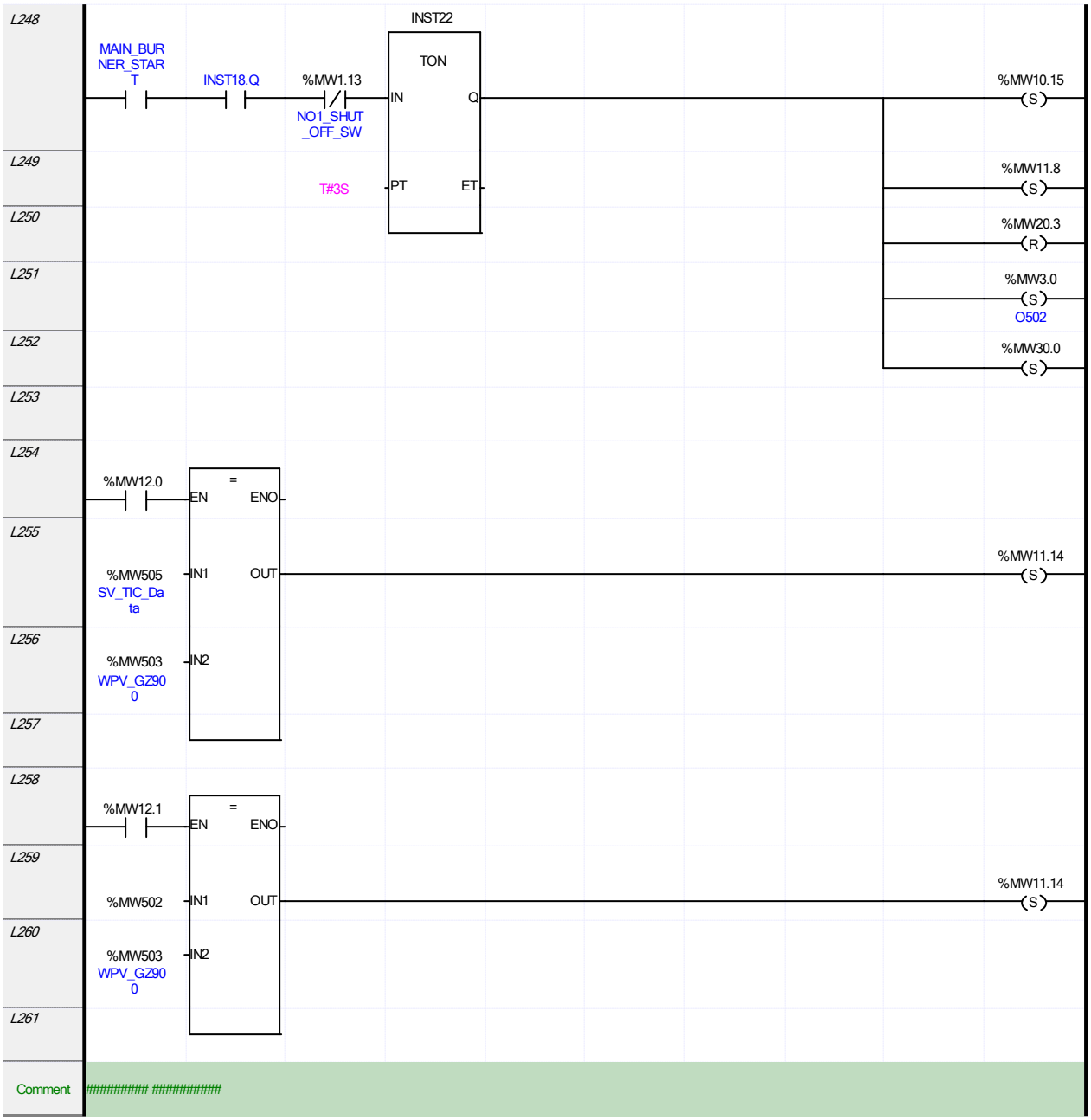
L248
MAIN_BURNER_START
INST18.Q
%MW1.13
NO1_SHUT_OFF_SW
INST22
TON
IN
Q
PT
ET
T#3S
%MW10.15
S
L249
%MW11.8
S
L250
%MW20.3
R
L251
%MW3.0
S
O502
L252
%MW30.0
S
L253
L254
%MW12.0
=
EN
ENO
L255
%MW505
SV_TIC_Data
IN1
OUT
%MW11.14
S
L256
%MW503
WPV_GZ900
IN2
L257
L258
%MW12.1
=
EN
ENO
L259
%MW502
IN1
OUT
%MW11.14
S
L260
%MW503
WPV_GZ900
IN2
L261
Comment
######### ##########

L263	%MW30.0	%MW1.14 NO1_FLAME_ON	%MW2.14 (S) O518	
L264				
L265		%MW1.7 LOW_GAS_PRE; %MW1.8 HIGH_GAS_PRE	%MW3.8 (S) O510	
L266				
L267		%MW0.2 NO1_ECOR_TRIP	%MW2.14 (S) O518	
L268		%MW0.3 NO2_ECOR_TRIP	%MW2.15 (S) O519	
L269				
L270				
L271		%MW1.8 HIGH_GAS_PRE	%MW3.6 (S) O508	
L272		%MW1.7 LOW_GAS_PRE	%MW3.7 (S) O509	
L273				
Comment	########## OUTPUT DATA ##########			
L275	%MW20.8		%MW4.0 ( ) Ready_ESV	CHÚ Ý
L276	%MW12.0		%MW4.1 ( ) Remote_ESV	
L277	%MW20.0		%MW4.2 ( ) Combustion_Air_Fan_Run_ESV	
L278	HIGH_LIMIT		%MW4.3 ( ) Hi_Fire_Limit_Switch_ESV	
L279	%MW20.3		%MW4.4 ( ) Pilot_Valve_ESV	
L280	%MW1.11 HIGH_GAS_LEAK_PRE		%MW4.5 ( ) Gas_Leak_PSH_ESV	
L281	%MW11.14		%MW4.6 ( ) Operation_Remote_Mode_ESV	CHÚ Ý

L282	%MW3.4 O506	%MW4.7 Temp_high_ESV	
L283	%MW1.8 HIGH_GAS_PRE	%MW4.8 Gas_Pressure_Hi_ESV	
L284	LOW_AIR_PRE	%MW4.9 Low_Comb_Air_Fan_Pr_ESV	
L285	%MW20.2	%MW4.10 _1ST_Valve_Gas_leak_ESV	
L286	%MW20.4		
L287	%MW3.5 O507	%MW4.11 Pilot_Burner_Miss_Fire_ESV	chu y
L288	ALARM_MISS_FIRE		
L289	ALARM_SEVOR_HIG	%MW4.12 Hi_Fire_Limit_Switch_Fault_ESV	chu ý
L290	%MW2.15 O519	%MW4.13 Combustion_Air_Fan_Fault_ESV	
L291	LOW_LIMIT	%MW4.14 Lo_Fire_Limit_Switch_ESV	
L292	%MW1.13 NO1_SHUT_OFF_SW	%MW4.15 Main_Gas_Shutoff_ESV	
L293	%MW1.10 LOW_GAS_LEAK_PRE	%MW5.0 Gas_Leak_PSL_ESV	
L294	%MW6.0 STOP	%MW5.1 Emergency_Stop_ESV	
L295	%MW0.6 FAN_RUN	%MW5.2 Circulation_Low_Speed_ESV	
L296	%MW1.7 LOW_GAS_PRE	%MW5.3 Gas_Pressure_Low_ESV	

L297
ALARM_NO1_SHUT
%MW5.4 (S) Gas_Leak_Check_Switch_Fault_ESV
chu y

L298

L299
%MW20.1
%MW5.5 ( ) _2ND_Valve_Gas_leak_ESV

L300
%MW20.4

L301
%MW3.5 O507
%MW5.6 ( ) Main_Burner_Miss_Fire_ESV

L302
ALARM_MISS_FIRE

L303
ALARM_SEVOR_LOW
%MW5.7 (S) Lo_Fire_Limit_Switch_Fault_ESV
chu ý

L304
ALARM_AIR_SPEDD
%MW5.8 ( ) Alarm_ESV

L305
%MW3.5 O507

L306
%MW3.4 O506

L307
%MW4.11 Pilot_Burner_Miss_Fire_ESV

L308
%MW4.12 Hi_Fire_Limit_Switch_Fault_ESV

L309
%MW4.13 Combustion_Air_Fan_Fault_ESV

L310
%MW5.4 Gas_Leak_Check_Switch_Fault_ESV

L311
%MW5.7 Lo_Fire_Limit_Switch_Fault_ESV

L312

	Variable Kind	Variable	Type	Address	Initial Value	Retain	Used	EIP/OPC UA
1	VAR	ECOR_TRIP	BOOL			☐	☐	☐
2	VAR	INST	TOF			☐	☐	☐
3	VAR	NO2SHUT	BOOL			☐	☐	☐
4	VAR	O502	BOOL	%MW3.0		☐	☐	☐
5	VAR	O503	BOOL	%MW3.1		☐	☐	☐
6	VAR	O504	BOOL	%MW3.2		☐	☒	☐
7	VAR	O505	BOOL	%MW3.3		☐	☐	☐
8	VAR	O506	BOOL	%MW3.4		☐	☐	☐
9	VAR	O507	BOOL	%MW3.5		☐	☐	☐
10	VAR	O508	BOOL	%MW3.6		☐	☐	☐
11	VAR	O509	BOOL	%MW3.7		☐	☐	☐
12	VAR	O510	BOOL	%MW3.8		☐	☐	☐
13	VAR	O511	BOOL	%MW3.9		☐	☐	☐
14	VAR	O512	BOOL	%MW3.10		☐	☐	☐
15	VAR	O513	BOOL	%MW3.11		☐	☐	☐
16	VAR	O514	BOOL	%MW3.12		☐	☒	☐
17	VAR	O515	BOOL	%MW3.13		☐	☐	☐
18	VAR	O516	BOOL	%MW3.14		☐	☐	☐
19	VAR	O517	BOOL	%MW3.15		☐	☐	☐
20	VAR	O518	BOOL	%MW2.14		☐	☐	☐
21	VAR	O519	BOOL	%MW2.15		☐	☐	☐
22	VAR	OV_1L_1_SHUT_VAL	BOOL	%MW2.2		☐	☒	☐
23	VAR	OV_1L_2_SHUT_VAL	BOOL	%MW2.3		☐	☒	☐
24	VAR	OV_1L_PILOT_VAL	BOOL	%MW2.1		☐	☒	☐
25	VAR	OV_1L_SPK_IGN	BOOL	%MW2.0		☐	☒	☐
26	VAR	OV_1_COMB_FAN_RUN	BOOL	%MW2.6		☐	☒	☐
27	VAR	OV_2L_PILOT_VAL	BOOL	%MW2.5		☐	☐	☐
28	VAR	OV_2L_SPK_IGN	BOOL	%MW2.4		☐	☐	☐
29	VAR	OV_2_COMB_FAN_RUN	BOOL	%MW2.7		☐	☐	☐

	HMI	Comment
1	☐	
2	☐	
3	☐	
4	☐	BURNER LOAD UP
5	☐	LOW CIRCULATION FAN SPEED
6	☐	BURNER START
7	☐	
8	☐	HIGH TEMPERATURE
9	☐	MISS FIRE
10	☐	HIGH GAS PRESSURE
11	☐	LOW GAS PRESSURE
12	☐	GAS LEAK FAULT
13	☐	PURGE START
14	☐	PURGE END
15	☐	NO 1 LOW COMBUSTION FAN PRESSURE
16	☐	NO 1 LOW COMBUSTION FAN RUNNING
17	☐	NO 2 LOW COMBUSTION FAN PRESSURE
18	☐	NO 2 LOW COMBUSTION FAN RUNNING
19	☐	
20	☐	NO.01 COMBUSTION FAN ECOR TRIP
21	☐	NO.02 COMBUSTION FAN ECOR TRIP
22	☐	1 MAIN SHUT OFF VALVE
23	☐	2 MAIN SHUT -OFF VALVE
24	☐	#1 PILOT SOLENOID VALVE
25	☐	#1 SPARK IGNITOR
26	☐	#1 COMBUSION AIR FAN RUN
27	☐	#2 PILOT SOLENOID VALVE
28	☐	#2 SPARK IGNITOR
29	☐	#2 COMBUSION AIR FAN RUN

Comment ########## SPARK IGNITOR ##########

L1 %MW20.0 — %MW2.6 OV_1_COMB_FAN_RUN

L2 %MW3.12 O514

L3

Comment ########## PILOT SOLENOID VALVE ##########

L5 %MW20.3 — %MW2.1 OV_1L_PILOT_VAL

L6

Comment ########## ##########

L8 %MW20.6 — %MW2.0 OV_1L_SPK_IGN

L9

L10

Comment ########## NO1 SHUT OFF ##########

L12 %MW20.2 — %MW2.2 OV_1L_1_SHUT_VAL

L13 %MW20.4

Comment ########## NO2 SHUT OFF ##########

L15 %MW20.1 — %MW2.3 OV_1L_2_SHUT_VAL

L16 %MW20.4

Comment ########## BUZZER ##########

L18 %MW20.8 — %MW3.2 O504

L19

Comment ########## OUTPUT DATA ##########

L21 MOVE EN ENO — MOVE EN ENO — MOVE EN ENO

L22 %MW504 IN OUT %MW15 — %MW503 IN OUT %MW16 — %MW502 IN OUT %MW17

L23

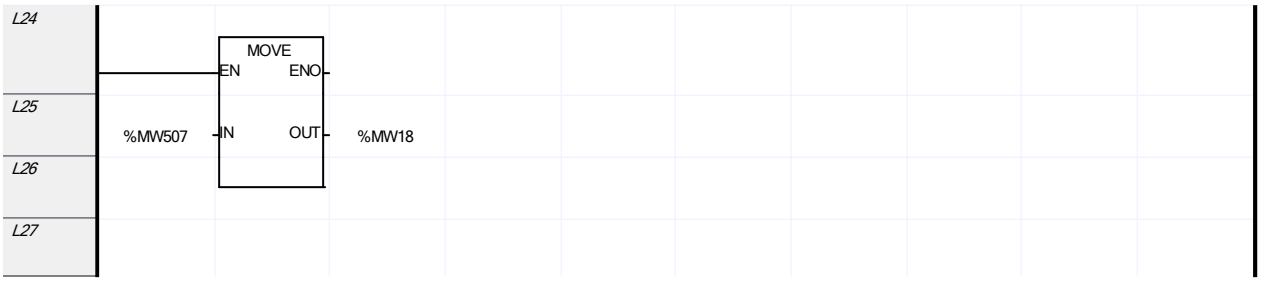
L24
L25
L26
L27
MOVE
EN
ENO
%MW507
IN
OUT
%MW18