Process documentation

Organization:	Lattice Semiconductor
Author:	Governance Board
Creation date:	2.09.2016
Version:	1.0.0

Table of contents

1 Accounts Payable (AP) Processes 4
2 Accounts Receivable (AR) Processes 7
3 Agile-EBS DETAILED E2E Product-Order-Cash-Revenue Process 10
4 Critical Supplier Qualification Process 30
5 CRM DETAILED End-to-End Process 34
6 1.24.20 Custom Spec (C-spec) creation process (L3) 51
7 2.11.10 VMI Supply 55
8 org structure and transfer pricing 58
9 Export Screen (GTM) 61
10 Finance Record to Report Processes 65
11 HR Benefits Administration 71
12 HR Compensation Benefits 72
13 HR Performance Management Processes 74
14 HR Staffing Process 78
15 HR Training Process - New Training Class 83
16 Lattice Manufacturing Process 88
17 Lattice QA Document Control Process 91
18 2.11.20 Demand Forecast to Wafer Plan 95
19 2.11.30 planning - data collections and ascp plan 99
20 2.11.50 Planning Process - Shortages 101
21 2.11.60 Plan Suggest Buy - Wafers 104
22 2.11.70 build plan for subcons 107
23 2.14.10/30 Pre-assembly wafer processing - sort - bump 110
24 2.14.40 Assembly - WLCS and FlipChip 114
25 2.14.40 Manufacturing Test Process 119
26 2.14.40.70 Silicon non-standard mfg jobs 122
27 2.14.50 Bin and Tape and Reel lots to FG 126
28 2.14.xx Manufacturing Process for Image Products 131
29 2.22.00 Item Costing and Standards 137
30 2.22.00 Quarterly Standard Cost Roll Process 140
31 3.2.00 Finished Goods Receiving 144
32 3.2.00 PO receipt - wafer 148
33 3.2.10 Wafer RMA request and resolution 151
34 3.3.20 Purchase Order Change Order Process 155
35 3.3.30 Supplier Creation Process 157
36 3.3.40 blanket purchase order updates 160
37 3.3.60 Indirect Purchasing Requisitions 163
38 3.6.1 AP 1099 Process 166
39 3.6.1 AP Invoice Creation, Validation with Accelim 170
40 3.6.1 AP Payment Process 173
41 3.6.1 AP Prepayments 176
42 4.5.10 Order Entry 177
43 4.5.10-SW Software Orders 181
44 4.5.10.30 RMA Return Materials Disposition Process 184
45 4.5.20 order booking and verification 187
46 4.5.20.10 order scheduling 191
47 4.5.xx Board-Kit Build and Order 194
48 4.5.xx HDMI-MHL LLC service contracts 199
49 4.5.xx Simplay orders 203
50 4.8.1 Customer Invoicing 208
51 4.8.1 LLC Royalty Invoicing 212

52 4.8.1 Manual/Cash Receipts 214
53 4.20.30 Order Picking Process 218
54 4.20.30.10 Order Picking Rules 221
55 4.20.40 Order Packing Process 224
56 4.20.60 Order Shipping Process 227
57 4.20.60 Shipping - Drop ship from subcon to customer 229
58 5.1.1 finance cash management 232
59 5.1.3 Fixed Asset 235
60 5.1.4 Finance Job Closure Variance Review 239
61 5.1.4 Inventory Reconciliation - monthly close 242
62 5.1.4 Variance Accounting 245
63 5.1.4.1 Enter and Maintain Chart of Accounts 248
64 5.1.4.2 Journal Processing and Approvals 250
65 5.1.4.3 Journal Posting 256
66 5.1.4.4 General Ledger Inquires 257
67 5.1.4.5 Currency Rates and Revaluation/Translation 260
68 Account Management (L3) 262
69 Creating and Editing Splits in SPM (L3) 267
70 Customer Sample Orders (L3) 270
71 Governance Review-Approve Cycle (L3) 273
72 HR Benefits Changes (L3) 277
73 HR Benefits New Hire (L3) 282
74 HR Benefits Reporting (L3) 286
75 HR Benefits Termination Process (L3) 291
76 HR Bonus Compensation (L3) 295
77 HR Executive Compensation (L3) 298
78 HR Focal-Related Compensation (L3) 300
79 HR Retention Compensation (L3) 303
80 HR Stock Compensation (L3) 305
81 Incentive Compensation Planning and Payment (L3) 308
82 IP Licensing 314
83 Lead Management in OSC (L3) 318
84 Non-opportunity Quote (L4) 323
85 Quote Approval (L4) 327
86 Opportunity Management (L3) 329
87 Opportunity Request/Deal Registration (L3) 335
88 Order - Manufacturing - Wafer Sale 339
89 Order Release 341
90 PML Research and Develop Subprocess (L3) 344
91 Price List Generation 346
92 Quote Approval and DPA (L3) 349
93 Sales Quota Process (L3) 354
94 Logistics Shipping and Receiving Process 357
95 Material Review Board (MRB) Process 360
96 Order Management Process 364
97 PCN-PIT Process 368
98 Planning Process 374
99 Procurement-Purchasing Process 377
100 QA Corrective/ Preventive Action Process 380
101 QA-CIS Customer Collateral 383
102 Receiving in EBS 387
103 Software Service Request 390
104 Supply Chain Setups Process 394

1 Accounts Payable (AP) Processes

Diagram Type	Business Process Diagram (BPMN 2.0)
Path	Shared documents / Sub-Processes (L2)
Author	Amber Barber
Revision Number	4
Last modified	May 26, 2016
Diagram Link	https://editor.signavio.com/p/editor?id=55415be6670c48a3adc5f78a58523e3e

1.1 Diagram

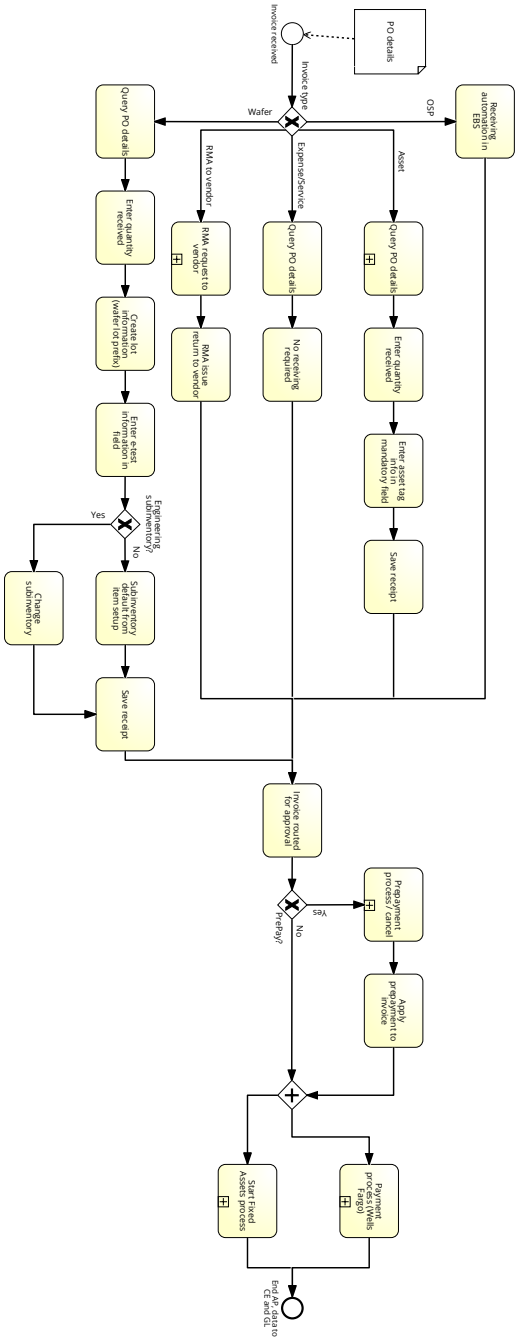

1.2 Description

Invoices, payment, reporting, and supplier data management
Accounts payable process, from invoice receipt of various item types through payment

1.3 Elements

Process elements

Invoice received

Start Event

Data objects: PO details

Invoice type

Data-based Exclusive (XOR) Gateway

Receiving automation in EBS

Task

Query PO details

Collapsed Subprocess

Subprocess reference: 3.6.1 AP Invoice Creation, Validation with Accelim (https://editor.signavio.com/p/model/b426ad50401a414c8e615e4d8068d33c)

Enter quantity received

Task

Enter asset tag info in mandatory field

Task

Save receipt

Task

Query PO details

Task

No receiving required

Task

RMA request to vendor

Collapsed Subprocess

Subprocess reference: 3.2.10 Wafer RMA request and resolution (https://editor.signavio.com/p/model/4dcacfffbb7d4bcebb8876ec83fb96fb)

RMA issue return to vendor

Task

Query PO details

Task

Enter quantity received

Task

Create lot information (wafer lot prefix)

Task

Enter e-test information in field

Task

Engineering subinventory?

Data-based Exclusive (XOR) Gateway

Subinventory default from item setup

Task

Change subinventory

Task

Save receipt

Task

Invoice routed for approval

Task

PrePay?

Data-based Exclusive (XOR) Gateway

Prepayment process / cancel

Collapsed Subprocess

Subprocess reference: 3.6.1 AP Prepayments (https://editor.signavio.com/p/model/cab7745176d64a358165c3afd998e4d1)

Apply prepayment to invoice

Task

Parallel Gateway

Parallel Gateway

Start Fixed Assets process

Collapsed Subprocess

Subprocess reference: 5.1.3 Fixed Asset (https://editor.signavio.com/p/model/16c51e9218ec4f178a3bbfb2334ed1a6)

Payment process (Wells Fargo)

Collapsed Subprocess

Subprocess reference: 3.6.1 AP Payment Process (https://editor.signavio.com/p/model/45b92077fb0848cab3bcb1cddc4dc22c)

End AP, data to CE and GL

End Event

Data / IT-Systems

PO details

Data Object

2 Accounts Receivable (AR) Processes

Diagram Type	Business Process Diagram (BPMN 2.0)
Path	Shared documents / Sub-Processes (L2)
Author	Amber Barber

Revision Number	5
Last modified	Jun 1, 2016
Diagram Link	https://editor.signavio.com/p/editor?id=1fa88660c17946cfb80195edc9d2d308

2.1 Diagram

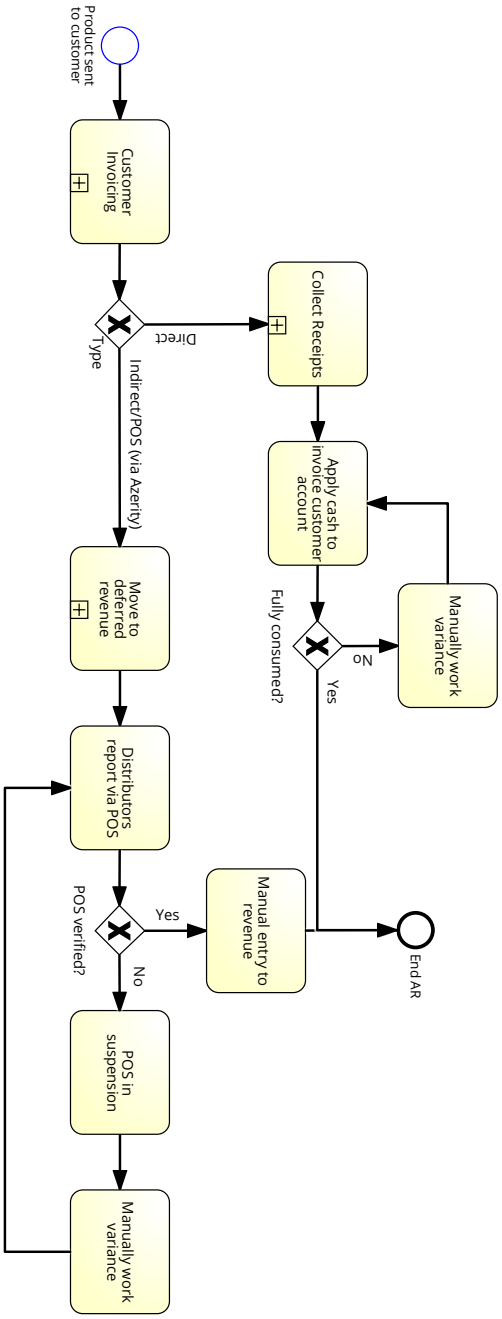

2.2 Description

Customer invoicing, receipts, adjustments, customer account and credit
Complete Lattice accounts receivable process at high level

2.3 Elements

Process elements

Product sent to customer

Start Event

Customer Invoicing

Collapsed Subprocess

Subprocess reference: 4.8.1 Customer Invoicing (https://editor.signavio.com/p/model/ae1eb206606045dcbba068083937a4ef)

Type

Data-based Exclusive (XOR) Gateway

Collect Receipts

Collapsed Subprocess

Subprocess reference: 4.8.1 Manual/Cash Receipts (https://editor.signavio.com/p/model/8783c66a68254b808663f471061a483a)

Apply cash to invoice customer account

Task

Fully consumed?

Data-based Exclusive (XOR) Gateway

Manually work variance

Task

Move to deferred revenue

Collapsed Subprocess

Distributors report via POS

Task

POS verified?

Data-based Exclusive (XOR) Gateway

Manual entry to revenue

Task

End AR

End Event

POS in suspension

Task

Manually work variance

Task

3 Agile-EBS DETAILED E2E Product-Order-Cash-Revenue Process

Diagram Type	Business Process Diagram (BPMN 2.0)
Path	Shared documents / Sub-Processes (L2)
Author	Amber Barber
Revision Number	30
Last modified	Mar 18, 2016
Diagram Link	https://editor.signavio.com/p/editor?id=bbd21e30b01040989bc52265bb09a8c5

3.1 Diagram

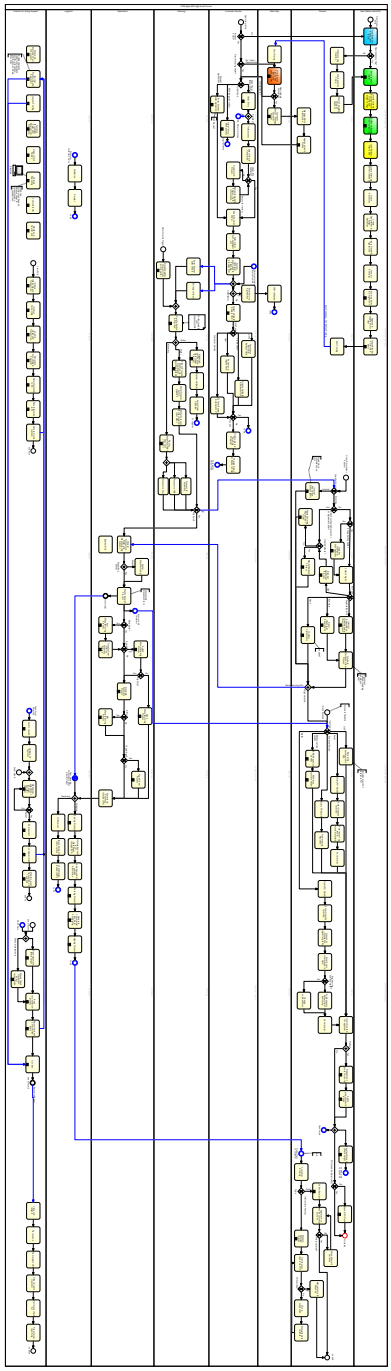

3.2 Description

L2 End-to-end of the Agile to EBS flow, from Item creation through shipping and payment/revenue

3.3 Elements

Process elements

New Product Entry

Start Event

Organization units: CRM-Agile-EBS High-level Process - Item Master team/QA

New Order Entry

Start Event

Organization units: CRM-Agile-EBS High-level Process - Customer Service

Product Exists?

Data-based Exclusive (XOR) Gateway

Organization units: CRM-Agile-EBS High-level Process - Customer Service

New Product Introduction (PLM)

Task

Organization units: CRM-Agile-EBS High-level Process - Item Master team/QA

New Inventory Org?

Data-based Exclusive (XOR) Gateway

Organization units: CRM-Agile-EBS High-level Process - Item Master team/QA

Inventory Org Creation

Task

Organization units: CRM-Agile-EBS High-level Process - Finance

Sub-inventory Setup

Task

Organization units: CRM-Agile-EBS High-level Process - Finance

Oracle Template Setup (if needed)

Task

Organization units: CRM-Agile-EBS High-level Process - Finance

Item Creation (Agile)

Collapsed Subprocess

Organization units: CRM-Agile-EBS High-level Process - Item Master team/QA

Interface items & categories to Oracle and assign to Orgs

Task

Organization units: CRM-Agile-EBS High-level Process - Item Master team/QA

BOM and Route Creation (AGILE)

Collapsed Subprocess

Organization units: CRM-Agile-EBS High-level Process - Item Master team/QA

Load BOM to Oracle EBS

Task

Organization units: CRM-Agile-EBS High-level Process - Item Master team/QA

Create Alternate BOM (if needed)

Task

Organization units: CRM-Agile-EBS High-level Process - Item Master team/QA

Create Resources

Task

Organization units: CRM-Agile-EBS High-level Process - Item Master team/QA

Create Department & Assign Resources

Task

Organization units: CRM-Agile-EBS High-level Process - Item Master team/QA

Create Standard Operations

Task

Organization units: CRM-Agile-EBS High-level Process - Item Master team/QA

Connect Routings

Task

Organization units: CRM-Agile-EBS High-level Process - Item Master team/QA

Sourcing Rules & Assignment

Collapsed Subprocess

Organization units: CRM-Agile-EBS High-level Process - Item Master team/QA

Approved Supplier(s) for Item

Task

Organization units: CRM-Agile-EBS High-level Process - Item Master team/QA

Create Blanket PO for OSP items

Collapsed Subprocess

Organization units: CRM-Agile-EBS High-level Process - Item Master team/QA

Subprocess reference: Procurement-Purchasing Process (https://editor.signavio.com/p/model/48807f849f9340fbbff87372cae12012)

Item Costing

Task

Organization units: CRM-Agile-EBS High-level Process - Finance

Disti Stocking Order?

Data-based Exclusive (XOR) Gateway

Organization units: CRM-Agile-EBS High-level Process - Customer Service

Disti Pricing

Task

Organization units: CRM-Agile-EBS High-level Process - Sales Ops

Oracle Sales Cloud CRM - leads and opportunities

Collapsed Subprocess

Organization units: CRM-Agile-EBS High-level Process - Sales Ops

Subprocess reference: Sales Operations (OSC/CPQ/SPM) (https://editor.signavio.com/p/model/44a259041b754c0d839029917353e6fd)

New/Update Customer?

Data-based Exclusive (XOR) Gateway

Organization units: CRM-Agile-EBS High-level Process - Sales Ops

Customer Master - Manage Customer Account

Collapsed Subprocess

Organization units: CRM-Agile-EBS High-level Process - Sales Ops

Manage Bill-to information

Task

Organization units: CRM-Agile-EBS High-level Process - Finance

Approve Credit Profile

Collapsed Subprocess

Organization units: CRM-Agile-EBS High-level Process - Finance

Order Type

Data-based Exclusive (XOR) Gateway

Organization units: CRM-Agile-EBS High-level Process - Customer Service

Enter blanket sales agreement

Collapsed Subprocess

Organization units: CRM-Agile-EBS High-level Process - Customer Service

Order Entry

Collapsed Subprocess

Organization units: CRM-Agile-EBS High-level Process - Customer Service

Simplay?

Parallel Gateway

Organization units: CRM-Agile-EBS High-level Process - Customer Service

Hold process

Task

Organization units: CRM-Agile-EBS High-level Process - Customer Service

Sales Order # Generated

Task

Organization units: CRM-Agile-EBS High-level Process - Customer Service

AR - Proforma invoice

Intermediate Event

Organization units: CRM-Agile-EBS High-level Process - Customer Service

Order "entry" - RMA process

Collapsed Subprocess

Organization units: CRM-Agile-EBS High-level Process - Customer Service

Logistics RMA

Intermediate Event

Organization units: CRM-Agile-EBS High-level Process - Customer Service

Journal Posting

Collapsed Subprocess

Organization units: CRM-Agile-EBS High-level Process - Finance On-Going Support

RMA from Customer Service

Intermediate Event

Organization units: CRM-Agile-EBS High-level Process - Logistics

Validation

Task

Organization units: CRM-Agile-EBS High-level Process - Logistics

Receipt

Task

Organization units: CRM-Agile-EBS High-level Process - Logistics

To AR

Intermediate Event

Organization units: CRM-Agile-EBS High-level Process - Logistics

WaferForecast Trigger

Start Event

Organization units: CRM-Agile-EBS High-level Process - Planning

Detailed wafer forecast from prior quarter

Collapsed Subprocess

Organization units: CRM-Agile-EBS High-level Process - Planning

Start AGIS

Start Event

Organization units: CRM-Agile-EBS High-level Process - Finance On-Going Support

Initiate Intercompany Transaction

Collapsed Subprocess

Organization units: CRM-Agile-EBS High-level Process - Finance On-Going Support

Initiator Accounting

Collapsed Subprocess

Organization units: CRM-Agile-EBS High-level Process - Finance On-Going Support

Submit Outbound Transaction

Collapsed Subprocess

Organization units: CRM-Agile-EBS High-level Process - Finance On-Going Support

Recipient Accounting & Approval

Collapsed Subprocess

Organization units: CRM-Agile-EBS High-level Process - Finance On-Going Support

Data Interfaced to AR

Collapsed Subprocess

Organization units: CRM-Agile-EBS High-level Process - Finance On-Going Support

Data Interfaced to AP

Collapsed Subprocess

Organization units: CRM-Agile-EBS High-level Process - Finance On-Going Support

Data to GL (via Journal)

Task

Organization units: CRM-Agile-EBS High-level Process - Finance On-Going Support

End AGIS

End Event

Organization units: CRM-Agile-EBS High-level Process - Finance On-Going Support

Simplay Proforma invoice from AR

Intermediate Event

Organization units: CRM-Agile-EBS High-level Process - Customer Service

Other Procurement Request

Start Event

Organization units: CRM-Agile-EBS High-level Process - Finance

Fixed Asset Received

Intermediate Event

Organization units: CRM-Agile-EBS High-level Process - Finance On-Going Support

Asset Creation

Collapsed Subprocess

Organization units: CRM-Agile-EBS High-level Process - Finance On-Going Support

Validate AP Payment

Task

Organization units: CRM-Agile-EBS High-level Process - Finance On-Going Support

Invoice Received

Start Event

Organization units: CRM-Agile-EBS High-level Process - Finance

End of Month

Start Event

Organization units: CRM-Agile-EBS High-level Process - Finance On-Going Support

Parallel Gateway

Parallel Gateway

Organization units: CRM-Agile-EBS High-level Process - Finance On-Going Support

End of Month

Start Event

Organization units: CRM-Agile-EBS High-level Process - Finance On-Going Support

AR, AP Data

Intermediate Event

Organization units: CRM-Agile-EBS High-level Process - Finance On-Going Support

Parallel Gateway

Parallel Gateway

Organization units: CRM-Agile-EBS High-level Process - Finance On-Going Support

Manual Bank statement entry/ reconciliation

Collapsed Subprocess

Organization units: CRM-Agile-EBS High-level Process - Finance On-Going Support

Bank statement (Wells Fargo)

Collapsed Subprocess

Organization units: CRM-Agile-EBS High-level Process - Finance On-Going Support

Bank reconciliation process

Collapsed Subprocess

Organization units: CRM-Agile-EBS High-level Process - Finance On-Going Support

Reconciliation of unreconciled items

Collapsed Subprocess

Organization units: CRM-Agile-EBS High-level Process - Finance On-Going Support

Enter and Maintain Chart of Accounts

Collapsed Subprocess

Organization units: CRM-Agile-EBS High-level Process - Finance On-Going Support

Journal Processing and Approvals

Collapsed Subprocess

Organization units: CRM-Agile-EBS High-level Process - Finance On-Going Support

Currency (Exchange) Rates and Revaluation/ Translation

Collapsed Subprocess

Organization units: CRM-Agile-EBS High-level Process - Finance On-Going Support

Open / Close Periods

Collapsed Subprocess

Organization units: CRM-Agile-EBS High-level Process - Finance On-Going Support

Order Hold Process

Task

Organization units: CRM-Agile-EBS High-level Process - Customer Service

Outside Reporting

Collapsed Subprocess

Organization units: CRM-Agile-EBS High-level Process - Finance On-Going Support

IT Systems: Blackline

Order Info Validated?

Data-based Exclusive (XOR) Gateway

Organization units: CRM-Agile-EBS High-level Process - Customer Service

Review & Update Relevant Hold Information

Task

Organization units: CRM-Agile-EBS High-level Process - Customer Service

Controls (SOX)

Collapsed Subprocess

Organization units: CRM-Agile-EBS High-level Process - Finance On-Going Support

Book the Sales Order

Task

Organization units: CRM-Agile-EBS High-level Process - Customer Service

Month and Quarter end

Collapsed Subprocess

Organization units: CRM-Agile-EBS High-level Process - Finance On-Going Support

Sales Order Acknowledgement

Task

Organization units: CRM-Agile-EBS High-level Process - Customer Service

System Generates promise date, Planning provides SSD

Task

Organization units: CRM-Agile-EBS High-level Process - Customer Service

Enter Manual Sales Orders

Task

Organization units: CRM-Agile-EBS High-level Process - Planning

Parallel Gateway

Parallel Gateway

Organization units: CRM-Agile-EBS High-level Process - Customer Service

EDI Sales Orders

Task

Organization units: CRM-Agile-EBS High-level Process - Planning

GTM validation

Task

Organization units: CRM-Agile-EBS High-level Process - Sales Ops

Enter Service Agreement

Task

Organization units: CRM-Agile-EBS High-level Process - Customer Service

HDMI/MHL

Parallel Gateway

Organization units: CRM-Agile-EBS High-level Process - Customer Service

Parallel Gateway

Parallel Gateway

Organization units: CRM-Agile-EBS High-level Process - Planning

System Validate & Apply Hold

Collapsed Subprocess

Organization units: CRM-Agile-EBS High-level Process - Customer Service

To AR

Intermediate Event

Organization units: CRM-Agile-EBS High-level Process - Sales Ops

Data Collection & Plan Run

Collapsed Subprocess

Organization units: CRM-Agile-EBS High-level Process - Planning

Data objects: Current supply (PO, inventory/WIP)

Hold Type

Data-based Exclusive (XOR) Gateway

Organization units: CRM-Agile-EBS High-level Process - Customer Service

Parallel Gateway

Parallel Gateway

Organization units: CRM-Agile-EBS High-level Process - Planning

Compliance Review & Release Hold

Task

Organization units: CRM-Agile-EBS High-level Process - Customer Service

Suggested Lattice Ship Date (Order Promise)

Collapsed Subprocess

Organization units: CRM-Agile-EBS High-level Process - Planning

Review and release hold

Task

Organization units: CRM-Agile-EBS High-level Process - Customer Service

Plan to Procure Wafers and Non-Wafer purchased items

Collapsed Subprocess

Organization units: CRM-Agile-EBS High-level Process - Planning

Planner Validates

Task

Organization units: CRM-Agile-EBS High-level Process - Planning

Finance Validate & Release Hold

Task

Organization units: CRM-Agile-EBS High-level Process - Customer Service

Wafer Forecast sent to Suppliers

Task

Organization units: CRM-Agile-EBS High-level Process - Planning

CS Team Review & Update SSD

Task

Organization units: CRM-Agile-EBS High-level Process - Customer Service

Sales Order Updated

Task

Organization units: CRM-Agile-EBS High-level Process - Planning

Wafer Forecast for Next quarter (next plan)

Task

Organization units: CRM-Agile-EBS High-level Process - Planning

IP or SW

Data-based Exclusive (XOR) Gateway

Organization units: CRM-Agile-EBS High-level Process - Customer Service

To Logistics

Intermediate Event

Organization units: CRM-Agile-EBS High-level Process - Planning

To AR

Intermediate Event

Organization units: CRM-Agile-EBS High-level Process - Customer Service

Order Line is in "Awaiting Shipping"

Task

Organization units: CRM-Agile-EBS High-level Process - Customer Service

Plan for Assembly/T&R / Test Lots ("Make")

Collapsed Subprocess

Organization units: CRM-Agile-EBS High-level Process - Planning

Change Status to Ready to Ship

Task

Organization units: CRM-Agile-EBS High-level Process - Customer Service

Parallel Gateway

Parallel Gateway

Organization units: CRM-Agile-EBS High-level Process - Planning

To Logistics Silicon, tools

Intermediate Event

Organization units: CRM-Agile-EBS High-level Process - Customer Service

Forecast to Assembly

Task

Organization units: CRM-Agile-EBS High-level Process - Planning

Forecast to T&R

Task

Organization units: CRM-Agile-EBS High-level Process - Planning

Forecast to Test

Task

Organization units: CRM-Agile-EBS High-level Process - Planning

Internal Requisition Process (VMI)

Collapsed Subprocess

Organization units: CRM-Agile-EBS High-level Process - Finance

Supplier Source

Data-based Exclusive (XOR) Gateway

Organization units: CRM-Agile-EBS High-level Process - Finance

Does Purchasing Document or Agreement exist?

Data-based Exclusive (XOR) Gateway

Organization units: CRM-Agile-EBS High-level Process - Finance

POs Exist?

Data-based Exclusive (XOR) Gateway

Organization units: CRM-Agile-EBS High-level Process - Planning

Change Existing Requisition / Order

Collapsed Subprocess

Organization units: CRM-Agile-EBS High-level Process - Finance

Is Supplier Available?

Data-based Exclusive (XOR) Gateway

Organization units: CRM-Agile-EBS High-level Process - Finance

Orders/ Forecasts to Wafer and Manufacturing Subcons

Task

Organization units: CRM-Agile-EBS High-level Process - Operations

Boards/Kits?

Task

Organization units: CRM-Agile-EBS High-level Process - Operations

Supplier Creation & Management

Collapsed Subprocess

Organization units: CRM-Agile-EBS High-level Process - Finance

Create Release?

Data-based Exclusive (XOR) Gateway

Organization units: CRM-Agile-EBS High-level Process - Finance

Blanket Release Process

Collapsed Subprocess

Organization units: CRM-Agile-EBS High-level Process - Finance

Wafer Manufacturing

Task

Organization units: CRM-Agile-EBS High-level Process - Operations

Make/Buy Wafer

Parallel Gateway

Organization units: CRM-Agile-EBS High-level Process - Operations

Select Ship-To

Task

Organization units: CRM-Agile-EBS High-level Process - Finance

Blanket Agreement Process

Collapsed Subprocess

Organization units: CRM-Agile-EBS High-level Process - Finance

Wafer Receipt Process

Task

Organization units: CRM-Agile-EBS High-level Process - Operations

Wafer Sales

Intermediate Event

Organization units: CRM-Agile-EBS High-level Process - Operations

PO Type

Data-based Exclusive (XOR) Gateway

Organization units: CRM-Agile-EBS High-level Process - Finance

Invoice to AR for wafers

Intermediate Event

Organization units: CRM-Agile-EBS High-level Process - Operations

Indirect Requisitions (Created using iProcurement)

Collapsed Subprocess

Organization units: CRM-Agile-EBS High-level Process - Finance

Direct (Inventory) Requisitions

Collapsed Subprocess

Organization units: CRM-Agile-EBS High-level Process - Finance

Sort Manufacturing Process

Collapsed Subprocess

Organization units: CRM-Agile-EBS High-level Process - Operations

Blind Build?

Data-based Exclusive (XOR) Gateway

Organization units: CRM-Agile-EBS High-level Process - Operations

Contract Agreements

Collapsed Subprocess

Organization units: CRM-Agile-EBS High-level Process - Finance

BUMP Manufacturing Process

Collapsed Subprocess

Organization units: CRM-Agile-EBS High-level Process - Operations

Transfer from SORT to Assembly Subcon

Collapsed Subprocess

Organization units: CRM-Agile-EBS High-level Process - Operations

Bump?

Data-based Exclusive (XOR) Gateway

Organization units: CRM-Agile-EBS High-level Process - Operations

Standard Purchase Order Process

Task

Organization units: CRM-Agile-EBS High-level Process - Finance

Flip Chip?

Data-based Exclusive (XOR) Gateway

Organization units: CRM-Agile-EBS High-level Process - Operations

Standard Assembly Process

Collapsed Subprocess

Organization units: CRM-Agile-EBS High-level Process - Operations

PO generated

Parallel Gateway

Organization units: CRM-Agile-EBS High-level Process - Finance

WLCS Manufacturing Process

Collapsed Subprocess

Organization units: CRM-Agile-EBS High-level Process - Operations

BIN Manufacturing Process

Collapsed Subprocess

Organization units: CRM-Agile-EBS High-level Process - Operations

BIN?

Data-based Exclusive (XOR) Gateway

Organization units: CRM-Agile-EBS High-level Process - Operations

Item Type

Data-based Exclusive (XOR) Gateway

Organization units: CRM-Agile-EBS High-level Process - Finance

Receiving Automation in EBS

Task

Organization units: CRM-Agile-EBS High-level Process - Finance

RMA Request to Vendor

Collapsed Subprocess

Organization units: CRM-Agile-EBS High-level Process - Finance

Tape & Reel?

Data-based Exclusive (XOR) Gateway

Organization units: CRM-Agile-EBS High-level Process - Operations

RMA Issue return to vendor

Collapsed Subprocess

Organization units: CRM-Agile-EBS High-level Process - Finance

Tape & Reel Process

Collapsed Subprocess

Organization units: CRM-Agile-EBS High-level Process - Operations

From Planning- Sales Order and CS order (Simplay)

Intermediate Signal Event

Organization units: CRM-Agile-EBS High-level Process - Logistics

Query PO Details

Task

Organization units: CRM-Agile-EBS High-level Process - Finance

Make asset adjustment (change/ transfer/ reclass)

Collapsed Subprocess

Organization units: CRM-Agile-EBS High-level Process - Finance On-Going Support

Material to Inventory location (FGI)

Task

Organization units: CRM-Agile-EBS High-level Process - Operations

Parallel Gateway

Parallel Gateway

Organization units: CRM-Agile-EBS High-level Process - Logistics

Enter Quantity received

Task

Organization units: CRM-Agile-EBS High-level Process - Finance

Query PO details

Task

Organization units: CRM-Agile-EBS High-level Process - Finance

Retire?

Data-based Exclusive (XOR) Gateway

Organization units: CRM-Agile-EBS High-level Process - Finance On-Going Support

Picking Process

Collapsed Subprocess

Organization units: CRM-Agile-EBS High-level Process - Logistics

JSI Receives

Task

Organization units: CRM-Agile-EBS High-level Process - Logistics

Retire assets

Collapsed Subprocess

Organization units: CRM-Agile-EBS High-level Process - Finance On-Going Support

Enter Asset Tag info in mandatory field

Task

Organization units: CRM-Agile-EBS High-level Process - Finance

No Receiving Required

Task

Organization units: CRM-Agile-EBS High-level Process - Finance

Information sent to JSI Warehouse through B2B

Task

Organization units: CRM-Agile-EBS High-level Process - Logistics

JSI sends report file to Lattice

Task

Organization units: CRM-Agile-EBS High-level Process - Logistics

Run Depreciation

Collapsed Subprocess

Organization units: CRM-Agile-EBS High-level Process - Finance On-Going Support

Save receipt

Task

Organization units: CRM-Agile-EBS High-level Process - Finance

Add Airway Bill number information

Task

Organization units: CRM-Agile-EBS High-level Process - Logistics

Confirmation loaded to EBS

Task

Organization units: CRM-Agile-EBS High-level Process - Logistics

Maintain asset transactions in Tax Book

Collapsed Subprocess

Organization units: CRM-Agile-EBS High-level Process - Finance On-Going Support

Query PO Details

Task

Organization units: CRM-Agile-EBS High-level Process - Finance

Packing Process

Collapsed Subprocess

Organization units: CRM-Agile-EBS High-level Process - Logistics

To AP

Intermediate Event

Organization units: CRM-Agile-EBS High-level Process - Logistics

End FA

End Event

Organization units: CRM-Agile-EBS High-level Process - Finance On-Going Support

Enter Quantity received

Task

Organization units: CRM-Agile-EBS High-level Process - Finance

Generate Commercial Invoice & Packing Slip (JSI)

Collapsed Subprocess

Organization units: CRM-Agile-EBS High-level Process - Logistics

Create Lot information (wafer lot prefix)

Task

Organization units: CRM-Agile-EBS High-level Process - Finance

Shipping Process

Collapsed Subprocess

Organization units: CRM-Agile-EBS High-level Process - Logistics

Enter E-test information in field

Task

Organization units: CRM-Agile-EBS High-level Process - Finance

To AR

Intermediate Event

Organization units: CRM-Agile-EBS High-level Process - Logistics

Engineering Subinventory

Data-based Exclusive (XOR) Gateway

Organization units: CRM-Agile-EBS High-level Process - Finance

Subinventory default from item setup

Task

Organization units: CRM-Agile-EBS High-level Process - Finance

Change subinventory

Task

Organization units: CRM-Agile-EBS High-level Process - Finance

Invoice routed for approval

Task

Organization units: CRM-Agile-EBS High-level Process - Finance

Save receipt

Task

Organization units: CRM-Agile-EBS High-level Process - Finance

PrePay?

Parallel Gateway

Organization units: CRM-Agile-EBS High-level Process - Finance

GL Close

Collapsed Subprocess

Organization units: CRM-Agile-EBS High-level Process - Finance On-Going Support

Prepayment process / cancel

Collapsed Subprocess

Organization units: CRM-Agile-EBS High-level Process - Finance

End of Month

Intermediate Event

Organization units: CRM-Agile-EBS High-level Process - Finance On-Going Support

Apply prepayment to invoice

Collapsed Subprocess

Organization units: CRM-Agile-EBS High-level Process - Finance

Parallel Gateway

Parallel Gateway

Organization units: CRM-Agile-EBS High-level Process - Finance

Fixed Assets

Intermediate Event

Organization units: CRM-Agile-EBS High-level Process - Finance

Payment Process (Wells Fargo)

Collapsed Subprocess

Organization units: CRM-Agile-EBS High-level Process - Finance

Product Sent to customer

Intermediate Event

Organization units: CRM-Agile-EBS High-level Process - Finance

Customer Invoicing

Task

Organization units: CRM-Agile-EBS High-level Process - Finance

End AP, Data to CE and GL

Intermediate Event

Organization units: CRM-Agile-EBS High-level Process - Finance

PO Closed Automatically?

Data-based Exclusive (XOR) Gateway

Organization units: CRM-Agile-EBS High-level Process - Finance

Collect Receipts

Collapsed Subprocess

Organization units: CRM-Agile-EBS High-level Process - Finance

Type

Data-based Exclusive (XOR) Gateway

Organization units: CRM-Agile-EBS High-level Process - Finance

Close sub ledgers

Task

Organization units: CRM-Agile-EBS High-level Process - Finance On-Going Support

Manual PO Close

Collapsed Subprocess

Organization units: CRM-Agile-EBS High-level Process - Finance

Apply cash to invoice customer account

Task

Organization units: CRM-Agile-EBS High-level Process - Finance

Tie revenue

Task

Organization units: CRM-Agile-EBS High-level Process - Finance On-Going Support

Move to deferred revenue

Collapsed Subprocess

Organization units: CRM-Agile-EBS High-level Process - Finance

Full consumed?

Data-based Exclusive (XOR) Gateway

Organization units: CRM-Agile-EBS High-level Process - Finance

PO Closed

End Event

Organization units: CRM-Agile-EBS High-level Process - Finance

Manually work variance

Task

Organization units: CRM-Agile-EBS High-level Process - Finance

Tie margin/COGS

Task

Organization units: CRM-Agile-EBS High-level Process - Finance On-Going Support

Distributors report via POS

Task

Organization units: CRM-Agile-EBS High-level Process - Finance

Other income (Journal)

Task

Organization units: CRM-Agile-EBS High-level Process - Finance On-Going Support

Manual entry to Revenue

Task

Organization units: CRM-Agile-EBS High-level Process - Finance

POS verified

Data-based Exclusive (XOR) Gateway

Organization units: CRM-Agile-EBS High-level Process - Finance

POS in suspension

Task

Organization units: CRM-Agile-EBS High-level Process - Finance

Disclosure check list

Task

Organization units: CRM-Agile-EBS High-level Process - Finance On-Going Support

Manually work variance

Task

Organization units: CRM-Agile-EBS High-level Process - Finance

File external reporting

Task

Organization units: CRM-Agile-EBS High-level Process - Finance On-Going Support

End R2R

End Event

Organization units: CRM-Agile-EBS High-level Process - Finance On-Going Support

End AR

End Event

Organization units: CRM-Agile-EBS High-level Process - Finance

Organization units

CRM-Agile-EBS High-level Process

Pool

Customer Service

Lane

Organization unit: CRM-Agile-EBS High-level Process

Finance

Lane

Organization unit: CRM-Agile-EBS High-level Process

Finance On-Going Support

Lane

Organization unit: CRM-Agile-EBS High-level Process

Item Master team/QA

Lane

Organization unit: CRM-Agile-EBS High-level Process

Logistics

Lane

Organization unit: CRM-Agile-EBS High-level Process

Operations

Lane

Organization unit: CRM-Agile-EBS High-level Process

Planning

Lane

Organization unit: CRM-Agile-EBS High-level Process

Sales Ops

Lane

Organization unit: CRM-Agile-EBS High-level Process

Data / IT-Systems

Blackline

IT System

External system

Organization unit: CRM-Agile-EBS High-level Process - Finance On-Going Support

Dictionary entries: Blackline : External system

Current supply (PO, inventory/WIP)

Data Object

Organization unit: CRM-Agile-EBS High-level Process - Planning

3.4 Linked dictionary entries

Blackline

External system

4 Critical Supplier Qualification Process

Diagram Type	Business Process Diagram (BPMN 2.0)
Path	Shared documents / Sub-Processes (L2)
Author	Amber Barber
Revision Number	3
Last modified	Mar 18, 2016
Diagram Link	https://editor.signavio.com/p/editor?id=0ce7744262ab4cc7a90139e2d2aa9380

4.1 Diagram

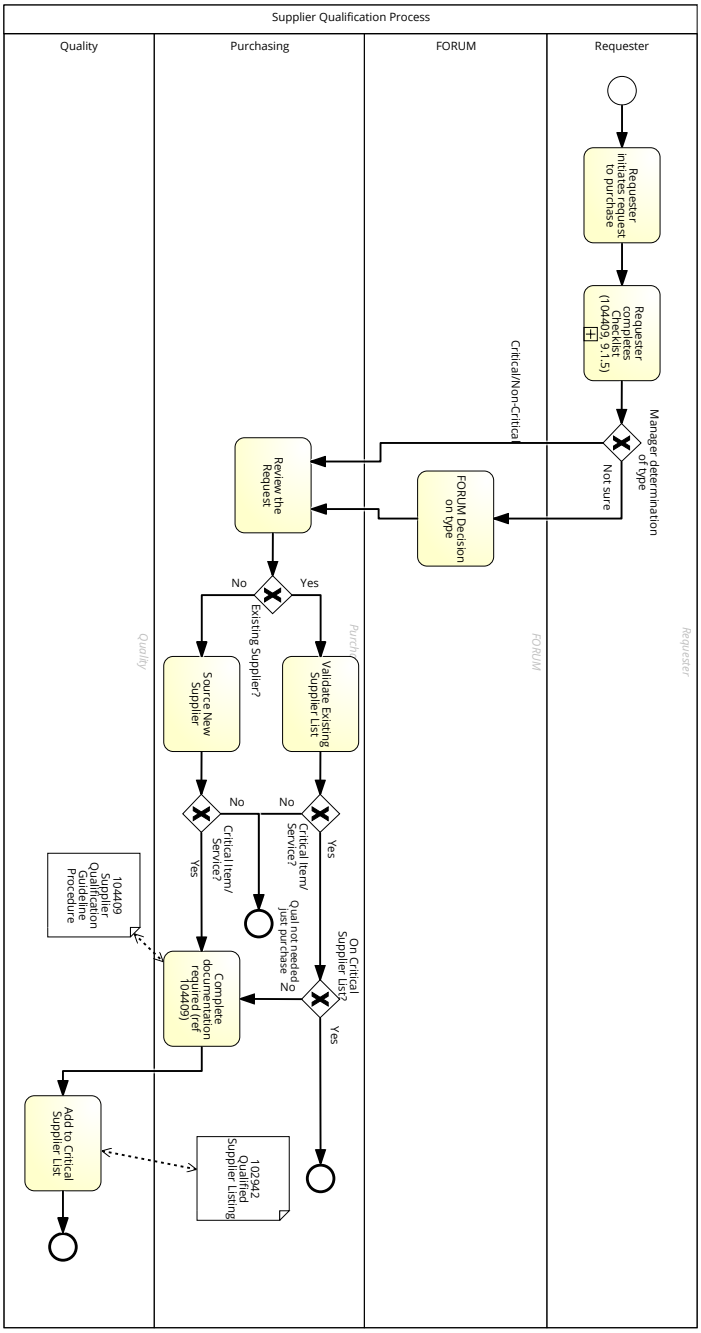

4.2 Elements

Process elements

Start Event

Start Event

Organization units: Supplier Qualification Process - Requester

Requester initiates request to purchase

Task

Organization units: Supplier Qualification Process - Requester

Requester completes Checklist (104409, 9.1.5)

Collapsed Subprocess

Organization units: Supplier Qualification Process - Requester

Subprocess reference: https://proquis.latticesemi.com/viewdocument.aspx?TYPE=LIVE&DOCNO=104409 (https://proquis.latticesemi.com/viewdocument.aspx?TYPE=LIVE&DOCNO=104409)

Manager determination of type

Data-based Exclusive (XOR) Gateway

Organization units: Supplier Qualification Process - Requester

FORUM Decision on type

Task

Organization units: Supplier Qualification Process - FORUM

Review the Request

Task

Organization units: Supplier Qualification Process - Purchasing

Existing Supplier?

Data-based Exclusive (XOR) Gateway

Organization units: Supplier Qualification Process - Purchasing

Validate Existing Supplier List

Task

Organization units: Supplier Qualification Process - Purchasing

Critical Item/ Service?

Data-based Exclusive (XOR) Gateway

Organization units: Supplier Qualification Process - Purchasing

On Critical Supplier List?

Data-based Exclusive (XOR) Gateway

Organization units: Supplier Qualification Process - Purchasing

End Event

End Event

Organization units: Supplier Qualification Process - Purchasing

Source New Supplier

Task

Organization units: Supplier Qualification Process - Purchasing

Critical Item/ Service?

Data-based Exclusive (XOR) Gateway

Organization units: Supplier Qualification Process - Purchasing

Qual not needed just purchase

End Event

Organization units: Supplier Qualification Process - Purchasing

Complete documentation required (ref 104409)

Task

Organization units: Supplier Qualification Process - Purchasing

Data objects: 104409 Supplier Qualification Guideline Procedure

Add to Critical Supplier List

Task

Organization units: Supplier Qualification Process - Quality

Data objects: 102942 Qualified Supplier Listing

End Event

End Event

Organization units: Supplier Qualification Process - Quality

Organization units

FORUM

Lane

Organization unit: Supplier Qualification Process

Purchasing

Lane

Organization unit: Supplier Qualification Process

Quality

Lane

Organization unit: Supplier Qualification Process

Requester

Lane

Organization unit: Supplier Qualification Process

Supplier Qualification Process

Pool

Data / IT-Systems

102942 Qualified Supplier Listing

Data Object

Organization unit: Supplier Qualification Process - Purchasing

104409 Supplier Qualification Guideline Procedure

Data Object

Organization unit: Supplier Qualification Process - Quality

5 CRM DETAILED End-to-End Process

Diagram Type	Business Process Diagram (BPMN 2.0)
Path	Shared documents / Sub-Processes (L2)
Author	Amber Barber
Revision Number	16
Last modified	Mar 18, 2016
Diagram Link	https://editor.signavio.com/p/editor?id=cbb95bb5824a4db9bb876d7dd4293db0

5.1 Diagram

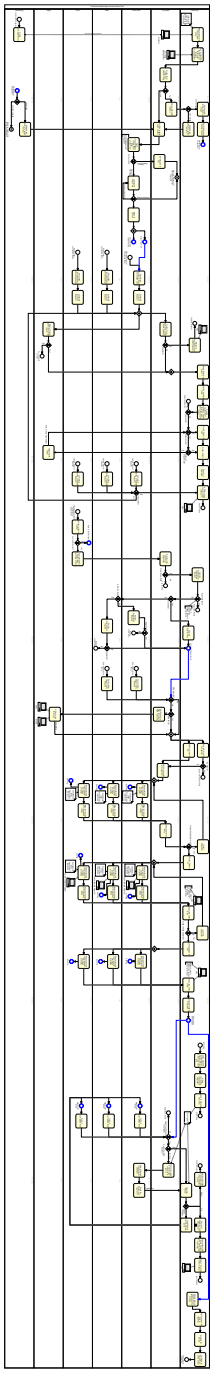

5.2 Description

Lead-Account-Opportunity-Pricing-Quoting

5.3 Elements

Process elements

Leads via Campaign

Start Event

Organization units: Customer Relationship Process End-to-End - Marketing

Create Campaign details

Task

Organization units: Customer Relationship Process End-to-End - Marketing

IT Systems: Marketo

Manually enter in OSC as "New Lead"

Task

Organization units: Customer Relationship Process End-to-End - Sales Ops

Data objects: Interesting moments to activities linked to the Lead

IT Systems: Marketo

Run Assignment (Assignment rules form territory management)

Task

Organization units: Customer Relationship Process End-to-End - Sales Ops

IT Systems: Territory Management

Assign Sales Contact by Geo/Territory

Task

Organization units: Customer Relationship Process End-to-End - IT/System

Data-based Exclusive (XOR) Gateway

Data-based Exclusive (XOR) Gateway

Organization units: Customer Relationship Process End-to-End - IT/System

Notify LMN Sales Support

Task

Organization units: Customer Relationship Process End-to-End - IT/System

Data-based Exclusive (XOR) Gateway

Data-based Exclusive (XOR) Gateway

Organization units: Customer Relationship Process End-to-End - Sales Ops

Not enough information to assign

Task

Organization units: Customer Relationship Process End-to-End - Sales Ops

Notify Marketing Quality Person

Task

Organization units: Customer Relationship Process End-to-End - Sales Ops

Marketing for Assignment

Intermediate Event

Organization units: Customer Relationship Process End-to-End - Sales Ops

Add/update Address, assign Territory

Task

Organization units: Customer Relationship Process End-to-End - Sales Ops

Marketing for Assignment

Intermediate Event

Organization units: Customer Relationship Process End-to-End - Marketing

Data-based Exclusive (XOR) Gateway

Data-based Exclusive (XOR) Gateway

Organization units: Customer Relationship Process End-to-End - Marketing

Add/update Address, assign Territory

Task

Organization units: Customer Relationship Process End-to-End - Marketing

Notify Assigned Sales Contact

Task

Organization units: Customer Relationship Process End-to-End - IT/System

Sales Acknowledges Lead & does initial assessment

Task

Organization units: Customer Relationship Process End-to-End - Field Sales

Assess Lead

Data-based Exclusive (XOR) Gateway

Organization units: Customer Relationship Process End-to-End - Field Sales

Delete Lead in OSC

Task

Organization units: Customer Relationship Process End-to-End - IT/System

Collect and Enter Data

Task

Organization units: Customer Relationship Process End-to-End - Field Sales

Data-based Exclusive (XOR) Gateway

Data-based Exclusive (XOR) Gateway

Organization units: Customer Relationship Process End-to-End - Field Sales

Return to Marketo for further development (manual)

End Message Event

Organization units: Customer Relationship Process End-to-End - IT/System

Ready to Convert

Task

Organization units: Customer Relationship Process End-to-End - Field Sales

Parallel Gateway

Parallel Gateway

Organization units: Customer Relationship Process End-to-End - Field Sales

Account/Contact

Intermediate Event

Organization units: Customer Relationship Process End-to-End - Field Sales

Convert Lead (Opportunity)

Intermediate Event

Organization units: Customer Relationship Process End-to-End - Field Sales

Return to Marketo for further development

End Message Event

Organization units: Customer Relationship Process End-to-End - Marketing

New Account Considered (OSC)

Start Event

Organization units: Customer Relationship Process End-to-End - Reps

Determine customer does not already exist

Task

Organization units: Customer Relationship Process End-to-End - Reps

Complete Account Request

Task

Organization units: Customer Relationship Process End-to-End - Reps

New Account Considered (PRM)

Start Event

Organization units: Customer Relationship Process End-to-End - Distis

Determine customer does not already exist

Task

Organization units: Customer Relationship Process End-to-End - Distis

Complete Account Request

Task

Organization units: Customer Relationship Process End-to-End - Distis

Other New Account Considered (OSC)

Start Event

Organization units: Customer Relationship Process End-to-End - Field Sales

Determine customer does not already exist

Task

Organization units: Customer Relationship Process End-to-End - Field Sales

Complete Account Request

Task

Organization units: Customer Relationship Process End-to-End - Field Sales

Update Account Request

Start Event

Organization units: Customer Relationship Process End-to-End - Reps

Complete Account Update Request

Task

Organization units: Customer Relationship Process End-to-End - Reps

Update Account Request

Start Event

Organization units: Customer Relationship Process End-to-End - Distis

Complete Account Update Request

Task

Organization units: Customer Relationship Process End-to-End - Distis

Update Account Request

Start Event

Organization units: Customer Relationship Process End-to-End - Field Sales

Complete Account Update Request

Task

Organization units: Customer Relationship Process End-to-End - Field Sales

Active in EBS?

Data-based Exclusive (XOR) Gateway

Organization units: Customer Relationship Process End-to-End - Field Sales

Parallel Gateway

Parallel Gateway

Organization units: Customer Relationship Process End-to-End - Field Sales

Manual Export and NDA control check

Task

Organization units: Customer Relationship Process End-to-End - Legal

Data-based Exclusive (XOR) Gateway

Data-based Exclusive (XOR) Gateway

Organization units: Customer Relationship Process End-to-End - Legal

Do not create account

End Event

Organization units: Customer Relationship Process End-to-End - Legal

System auto-duplicate check (name, address)

Task

Organization units: Customer Relationship Process End-to-End - IT/System

Duplicate?

Data-based Exclusive (XOR) Gateway

Organization units: Customer Relationship Process End-to-End - IT/System

Merge to Existing account in EBS (manual)

Task

Organization units: Customer Relationship Process End-to-End - Sales Ops

IT Systems: EBS

End New Account

End Event

Organization units: Customer Relationship Process End-to-End - Sales Ops

Parallel Gateway

Parallel Gateway

Organization units: Customer Relationship Process End-to-End - IT/System

Begin Review of account

Task

Organization units: Customer Relationship Process End-to-End - Sales Ops

Human duplicate check

Task

Organization units: Customer Relationship Process End-to-End - Sales Ops

Human validation of company name, location, type, default account team

Task

Organization units: Customer Relationship Process End-to-End - Sales Ops

Dup found?

Data-based Exclusive (XOR) Gateway

Organization units: Customer Relationship Process End-to-End - Sales Ops

Parent exists?

Data-based Exclusive (XOR) Gateway

Organization units: Customer Relationship Process End-to-End - Sales Ops

Create Parent in OSC

Task

Organization units: Customer Relationship Process End-to-End - Sales Ops

Parent on Export Hold?

Data-based Exclusive (XOR) Gateway

Organization units: Customer Relationship Process End-to-End - Sales Ops

Assign Parent

Task

Organization units: Customer Relationship Process End-to-End - Sales Ops

Account is Approved

Task

Organization units: Customer Relationship Process End-to-End - Sales Ops

Validate with Legal

Task

Organization units: Customer Relationship Process End-to-End - Legal

Reject and Notify

End Event

Organization units: Customer Relationship Process End-to-End - Sales Ops

Add Account/ contact to EBS (manual)

Task

Organization units: Customer Relationship Process End-to-End - Sales Ops

IT Systems: EBS

Account Active

End Event

Organization units: Customer Relationship Process End-to-End - Sales Ops

Opportunity at Disti Fulfillment or Registration

Start Event

Organization units: Customer Relationship Process End-to-End - Distis

Review customer in PRM

Task

Organization units: Customer Relationship Process End-to-End - Distis

Customer exists?

Data-based Exclusive (XOR) Gateway

Organization units: Customer Relationship Process End-to-End - Distis

Back to New Account

Intermediate Event

Organization units: Customer Relationship Process End-to-End - Distis

Complete Deal Registration form and submit

Task

Organization units: Customer Relationship Process End-to-End - Distis

Initial System Check for Duplicates

Task

Organization units: Customer Relationship Process End-to-End - IT/System

Create new Reg?

Data-based Exclusive (XOR) Gateway

Organization units: Customer Relationship Process End-to-End - IT/System

Human Validation of registration details

Task

Organization units: Customer Relationship Process End-to-End - Sales Ops

Duplicate check

Data-based Exclusive (XOR) Gateway

Organization units: Customer Relationship Process End-to-End - Sales Ops

Reject and Notify

End Event

Organization units: Customer Relationship Process End-to-End - Sales Ops

Fulfillment

Data-based Exclusive (XOR) Gateway

Organization units: Customer Relationship Process End-to-End - IT/System

Approve Registration

Task

Organization units: Customer Relationship Process End-to-End - Sales Ops

Is there a Rep?

Data-based Exclusive (XOR) Gateway

Organization units: Customer Relationship Process End-to-End - Reps

Review Registration Request

Task

Organization units: Customer Relationship Process End-to-End - Field Sales

Approved?

Data-based Exclusive (XOR) Gateway

Organization units: Customer Relationship Process End-to-End - Field Sales

Reject and Notify

End Event

Organization units: Customer Relationship Process End-to-End - Field Sales

Review Registration request

Task

Organization units: Customer Relationship Process End-to-End - Reps

Approved?

Data-based Exclusive (XOR) Gateway

Organization units: Customer Relationship Process End-to-End - Reps

Convert to Opportunity

Intermediate Event

Organization units: Customer Relationship Process End-to-End - Sales Ops

Reject and Notify

End Event

Organization units: Customer Relationship Process End-to-End - Reps

Use Existing

End Event

Organization units: Customer Relationship Process End-to-End - IT/System

New Opportunity Entry

Start Event

Organization units: Customer Relationship Process End-to-End - Field Sales

Fill out New Opportunity Request

Task

Organization units: Customer Relationship Process End-to-End - Field Sales

New Opportunity Entry

Start Event

Organization units: Customer Relationship Process End-to-End - Reps

Fill out New Opportunity Request

Task

Organization units: Customer Relationship Process End-to-End - Reps

NDA required?

Data-based Exclusive (XOR) Gateway

Organization units: Customer Relationship Process End-to-End - IT/System

NDA exists?

Data-based Exclusive (XOR) Gateway

Organization units: Customer Relationship Process End-to-End - IT/System

Notification to Requester that NDA required

Task

Organization units: Customer Relationship Process End-to-End - IT/System

NDA process (manual)

Task

Organization units: Customer Relationship Process End-to-End - Legal

IT Systems:

- Matrix
- GTM

Parallel Gateway

Parallel Gateway

Organization units: Customer Relationship Process End-to-End - IT/System

Update stage to DO

Task

Organization units: Customer Relationship Process End-to-End - Sales Ops

Duplicate check (on-going)

Task

Organization units: Customer Relationship Process End-to-End - Sales Ops

Duplicate?

Data-based Exclusive (XOR) Gateway

Organization units: Customer Relationship Process End-to-End - Sales Ops

Stage = Closed Duplicate

End Event

Organization units: Customer Relationship Process End-to-End - Sales Ops

Notify requester of Stage = DO

Task

Organization units: Customer Relationship Process End-to-End - IT/System

Set Pricing

Start Event

Organization units: Customer Relationship Process End-to-End - Sales Ops

Sales Ops and Marketing set Standard Price, Disti Price, Field Min

Task

Organization units: Customer Relationship Process End-to-End - Sales Ops

Pricing Committee reviews and approves

Task

Organization units: Customer Relationship Process End-to-End - Sales Ops

Load to EBS and OSC/CPQ

Task

Organization units: Customer Relationship Process End-to-End - Sales Ops

Data objects: Pricing Data

End Pricing

End Event

Organization units: Customer Relationship Process End-to-End - Sales Ops

Parallel Gateway

Parallel Gateway

Organization units: Customer Relationship Process End-to-End - IT/System

Quoting

Intermediate Event

Organization units: Customer Relationship Process End-to-End - Distis

Requester and team perform DO-stage activities

Task

Organization units: Customer Relationship Process End-to-End - Field Sales

Data objects: Confidence level assessment (optional)

Requester and team perform DO-stage activities

Task

Organization units: Customer Relationship Process End-to-End - Reps

Data objects: Confidence level assessment (optional)

Requester and team perform DO-stage activities

Task

Organization units: Customer Relationship Process End-to-End - Distis

Data objects: Confidence level assessment (optional)

Quoting

Intermediate Event

Organization units: Customer Relationship Process End-to-End - Field Sales

Quoting

Intermediate Event

Organization units: Customer Relationship Process End-to-End - Reps

Request change of Stage when ready

Task

Organization units: Customer Relationship Process End-to-End - Field Sales

Request change of Stage when ready

Task

Organization units: Customer Relationship Process End-to-End - Reps

Request change of Stage when ready

Task

Organization units: Customer Relationship Process End-to-End - Distis

Required fields check

Task

Organization units: Customer Relationship Process End-to-End - IT/System

Contact Requester

Task

Organization units: Customer Relationship Process End-to-End - Sales Ops

Stage change approved?

Data-based Exclusive (XOR) Gateway

Organization units: Customer Relationship Process End-to-End - Sales Ops

Quoting

Intermediate Event

Organization units: Customer Relationship Process End-to-End - Distis

Change Stage to DI

Task

Organization units: Customer Relationship Process End-to-End - Sales Ops

Parallel Gateway

Parallel Gateway

Organization units: Customer Relationship Process End-to-End - IT/System

Requester and team perform DI-stage activities

Task

Organization units: Customer Relationship Process End-to-End - Field Sales

Data objects: Confidence level assessment (optional)

IT Systems: Lattice Sample Program

Requester and team perform DI-stage activities

Task

Organization units: Customer Relationship Process End-to-End - Reps

Data objects: Confidence level assessment (optional)

IT Systems: Lattice Sample Program

Requester and team perform DI-stage activities

Task

Organization units: Customer Relationship Process End-to-End - Distis

Data objects: Confidence level assessment (optional)

IT Systems: Lattice Sample Program

Request change of Stage when ready

Task

Organization units: Customer Relationship Process End-to-End - Field Sales

Request change of Stage when ready

Task

Organization units: Customer Relationship Process End-to-End - Reps

Request change of Stage when ready

Task

Organization units: Customer Relationship Process End-to-End - Distis

Quoting

Intermediate Event

Organization units: Customer Relationship Process End-to-End - Reps

Quoting

Intermediate Event

Organization units: Customer Relationship Process End-to-End - Field Sales

Required fields check

Task

Organization units: Customer Relationship Process End-to-End - Sales Ops

IT Systems: EBS

Contact Requester

Task

Organization units: Customer Relationship Process End-to-End - Sales Ops

Stage change approved?

Data-based Exclusive (XOR) Gateway

Organization units: Customer Relationship Process End-to-End - Sales Ops

Change Stage to DW

Task

Organization units: Customer Relationship Process End-to-End - Sales Ops

Parallel Gateway

Parallel Gateway

Organization units: Customer Relationship Process End-to-End - IT/System

Requester and team perform DW-stage activities

Task

Organization units: Customer Relationship Process End-to-End - Field Sales

Requester and team perform DW-stage activities

Task

Organization units: Customer Relationship Process End-to-End - Reps

Requester and team perform DW-stage activities

Task

Organization units: Customer Relationship Process End-to-End - Distis

Quoting

Intermediate Event

Organization units: Customer Relationship Process End-to-End - Field Sales

Quoting

Intermediate Event

Organization units: Customer Relationship Process End-to-End - Reps

Quoting

Intermediate Event

Organization units: Customer Relationship Process End-to-End - Distis

Required fields check

Task

Organization units: Customer Relationship Process End-to-End - Sales Ops

IT Systems: EBS

Change Stage to Production

Task

Organization units: Customer Relationship Process End-to-End - Sales Ops

Opportunity in Production

Intermediate Event

Organization units: Customer Relationship Process End-to-End - Sales Ops

Request for Quote

Intermediate Event

Organization units: Customer Relationship Process End-to-End - Field Sales

Request for Quote

Intermediate Event

Organization units: Customer Relationship Process End-to-End - Reps

Request for Quote

Intermediate Event

Organization units: Customer Relationship Process End-to-End - Distis

Reject and Notify

End Event

Organization units: Customer Relationship Process End-to-End - IT/System

Submit completed RFQ

Task

Organization units: Customer Relationship Process End-to-End - Field Sales

Submit completed RFQ

Task

Organization units: Customer Relationship Process End-to-End - Reps

Submit completed RFQ

Task

Organization units: Customer Relationship Process End-to-End - Distis

Opportunity exists? (any stage)

Data-based Exclusive (XOR) Gateway

Organization units: Customer Relationship Process End-to-End - IT/System

New or Existing Business

Data-based Exclusive (XOR) Gateway

Organization units: Customer Relationship Process End-to-End - IT/System

Price of Existing Business (by customer & part)

Task

Organization units: Customer Relationship Process End-to-End - IT/System

Data objects: Pricing Data

Data validation (and optional addition)

Task

Organization units: Customer Relationship Process End-to-End - Field Sales

End RFQ Process

End Event

Organization units: Customer Relationship Process End-to-End - Sales Ops

Notify submitter with comments: copy rep/sales office

Task

Organization units: Customer Relationship Process End-to-End - Sales Ops

Sales Ops Review

Task

Organization units: Customer Relationship Process End-to-End - Sales Ops

Data objects: Pricing Data

Route for Review and Approval

Task

Organization units: Customer Relationship Process End-to-End - Field Sales

Data-based Exclusive (XOR) Gateway

Data-based Exclusive (XOR) Gateway

Organization units: Customer Relationship Process End-to-End - Sales Ops

Route for Approvals and Escalations

Collapsed Subprocess

Organization units: Customer Relationship Process End-to-End - Sales Ops

Subprocess reference: Quote Approval (L4) (https://editor.signavio.com/p/model/a26f4fc211b841d98786fef998d44fd4)

Suggest edits (price, margin,, part)

Task

Organization units: Customer Relationship Process End-to-End - Sales Ops

Generate official quote number and PDF. Notify submitter

Task

Organization units: Customer Relationship Process End-to-End - Sales Ops

Add as Price List in EBS (manual)

Task

Organization units: Customer Relationship Process End-to-End - Sales Ops

IT Systems: EBS

Quote active

End Event

Organization units: Customer Relationship Process End-to-End - Sales Ops

No updates to opportunity or revenue for 12 months

Task

Organization units: Customer Relationship Process End-to-End - Sales Ops

Notify owner (45 days to respond)

Task

Organization units: Customer Relationship Process End-to-End - Sales Ops

Evaluate for closure

Task

Organization units: Customer Relationship Process End-to-End - Sales Ops

Set Stage to "Closed Won", notify owner

Task

Organization units: Customer Relationship Process End-to-End - Sales Ops

Opportunity complete

End Event

Organization units: Customer Relationship Process End-to-End - Sales Ops

Organization units

Customer Relationship Process End-to-End

Pool

Distis

Lane

Organization unit: Customer Relationship Process End-to-End

Field Sales

Lane

Organization unit: Customer Relationship Process End-to-End

IT/System

Lane

Organization unit: Customer Relationship Process End-to-End

Legal

Lane

Organization unit: Customer Relationship Process End-to-End

Marketing

Lane

Organization unit: Customer Relationship Process End-to-End

Reps

Lane

Organization unit: Customer Relationship Process End-to-End

Data / IT-Systems

Confidence level assessment (optional)

Data Object

Organization unit: Customer Relationship Process End-to-End - Reps

Confidence level assessment (optional)

Data Object

Organization unit: Customer Relationship Process End-to-End - Reps

Confidence level assessment (optional)

Data Object

Organization unit: Customer Relationship Process End-to-End - Field Sales

Confidence level assessment (optional)

Data Object

Organization unit: Customer Relationship Process End-to-End - Field Sales

Confidence level assessment (optional)

Data Object

Organization unit: Customer Relationship Process End-to-End - Distis

Confidence level assessment (optional)

Data Object

Organization unit: Customer Relationship Process End-to-End - Distis

EBS

IT System

Organization unit: Customer Relationship Process End-to-End - Sales Ops

Interesting moments to activities linked to the Lead

Data Object

Organization unit: Customer Relationship Process End-to-End - Sales Ops

Pricing Data

Data Object

Organization unit: Customer Relationship Process End-to-End - Sales Ops

Territory Management

IT System

Organization unit: Customer Relationship Process End-to-End - IT/System

5.4 Linked dictionary entries

EBS

Oracle's e-Business supply chain management system. Also known as an ERP system.

GTM

Global Trade Management system, conducts the restricted parties screening for export controls.

Lattice Sample Program

3rd part site to management production samples

Marketo

Marketing campaign system. Links with OSC for Lead Management once moved to Sales.

Matrix

Legal system that manages Customer NDAs

Sales Ops

Group comprising the customer service team, quote team, pricing team, and other sales managers

Additional Attributes

6 1.24.20 Custom Spec (C-spec) creation process (L3)

Diagram Type	Business Process Diagram (BPMN 2.0)
Path	Shared documents / Sub-Processes (L2) / Draft L3 maps
Author	Amber Barber
Revision Number	6
Last modified	May 23, 2016
Diagram Link	https://editor.signavio.com/p/editor?id=835478e3bce74d73a2c656be7c9165b5

6.1 Diagram

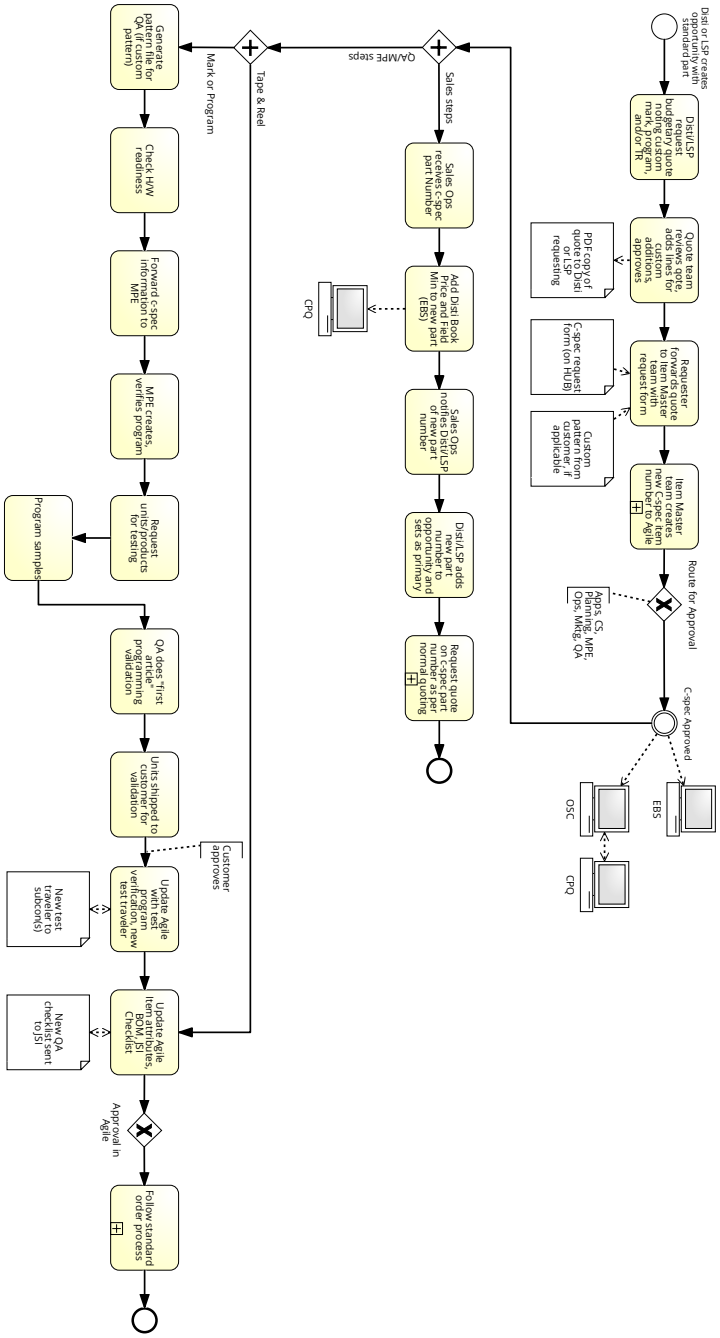

6.2 Description

Ready for team review 5

6.3 Elements

Process elements

Disti or LSP creates opportunity with standard part

Start Event

Disti/LSP request budgetary quote noting custom mark, program, and/or TR

Task

Quote team reviews qote, adds lines for custom additions, approves

Task

Data objects: PDF copy of quote to Disti or LSP requesting

Requester forwards quote to Item Master team with request form

Task

Data objects:

- Custom pattern from customer, if applicable
- C-spec request form (on HUB)

Item Master team creates new C-spec item number to Agile

Collapsed Subprocess

Subprocess reference: Supply Chain Setups Process (https://editor.signavio.com/p/model/9a251b7e99d4416e8b963064a53e41b5)

Route for Approval

Data-based Exclusive (XOR) Gateway

C-spec Approved

Intermediate Event

IT Systems:

- EBS
- OSC

Parallel Gateway

Parallel Gateway

Sales Ops receives c-spec part Number

Task

Add Disti Book Price and Field Min to new part (EBS)

Task

IT Systems: CPQ

Sales Ops notifies Disti/LSP of new part number

Task

Disti/LSP adds new part number to opportunity and sets as primary

Task

Request quote on c-spec part number as per normal quoting

Collapsed Subprocess

Subprocess reference: Quote Approval and DPA (L3) (https://editor.signavio.com/p/model/2cbe4b9b04cf403994994d8a0f73d11c)

End Event

End Event

Parallel Gateway

Parallel Gateway

Generate pattern file for QA (if custom pattern)

Task

Check H/W readiness

Task

Forward c-spec information to MPE

Task

MPE creates, verifies program

Task

Request units/products for testing

Task

Program samples

Task

QA does "first article" programming validation

Task

Units shipped to customer for validation

Task

Update Agile with test program verification, new test traveler

Task

Data objects: New test traveler to subcon(s)

Update Agile Item attributes, BOM, JSI Checklist

Task

Data objects: New QA checklist sent to JSI

Approval in Agile

Data-based Exclusive (XOR) Gateway

Follow standard order process

Collapsed Subprocess

Subprocess reference: Order Management Process (https://editor.signavio.com/p/model/34e6340d0d6c4118b11f4a66db8ae448)

End Event

End Event

Data / IT-Systems

C-spec request form (on HUB)

Data Object

CPQ

IT System

Pricing and quoting tool connected to Oracle Sales Cloud (OSC)

Dictionary entries: CPQ : Pricing and quoting tool connected to Oracle Sales Cloud (OSC)

Custom pattern from customer, if applicable

Data Object

New QA checklist sent to JSI

Data Object

New test traveler to subcon(s)

Data Object

PDF copy of quote to Disti or LSP requesting

Data Object

6.4 Linked dictionary entries

CPQ

Pricing and quoting tool connected to Oracle Sales Cloud (OSC)

EBS

Oracle's e-Business supply chain management system. Also known as an ERP system.

OSC

Oracle Sales Cloud

7 2.11.10 VMI Supply

Diagram Type	Business Process Diagram (BPMN 2.0)
Path	Shared documents / Sub-Processes (L2) / Draft L3 maps
Author	Amber Barber
Revision Number	2
Last modified	May 5, 2016
Diagram Link	https://editor.signavio.com/p/editor?id=cb91871a7f2044d1b0970b27fe4f8676

7.1 Diagram

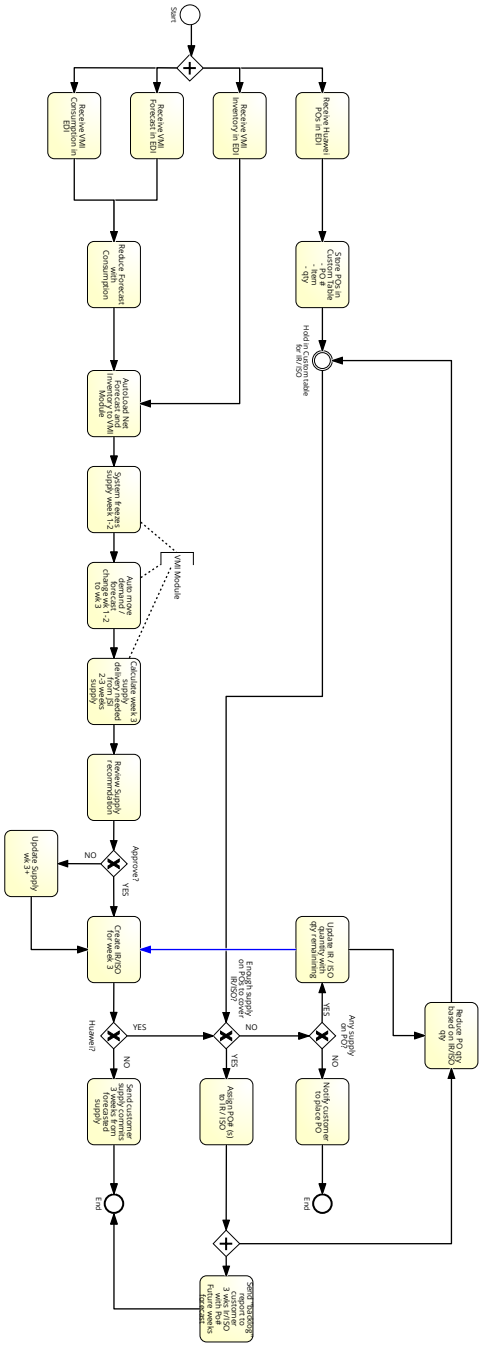

7.2 Description

Ready for team review 5

7.3 Elements

Process elements

Start

Start Event

Parallel Gateway

Parallel Gateway

Receive Huawei POs in EDI

Task

Store POs in Custom Table - PO # - Item - qty

Task

Hold in Custom table for IR/ ISO

Intermediate Event

Enough supply on POs to cover IR/ISO?

Data-based Exclusive (XOR) Gateway

Any supply on PO?

Data-based Exclusive (XOR) Gateway

Update IR / ISO quantity with qty remainining

Task

Notify customer to place PO

Task

End

End Event

Assign PO# (s) to IR / ISO

Task

Parallel Gateway

Parallel Gateway

Reduce PO qty based on IR/ISO qty

Task

Send "backlog" report to customer 3 wks Ir/ISO with Po# Future weeks forecast

Task

Receive VMI Inventory in EDI

Task

Receive VMI Forecast in EDI

Task

Receive VMI Consumption in EDI

Task

Reduce Forecast with Consumption

Task

AutoLoad Net Forecast and Inventory to VMI Module

Task

System freezes supply week 1-2

Task

Auto move demand / forecast change wk 1-2 to wk 3

Task

Calculate week 3 supply delivery needed from JSI 2-3 weeks supply

Task

Review Supply recommdation

Task

Approve?

Data-based Exclusive (XOR) Gateway

Update Supply wk 3+

Task

Create IR/ISO for week 3

Task

Huawei?

Data-based Exclusive (XOR) Gateway

Send customer supply commits 3 weeks from forecasted supply

Task

End

End Event

8 org structure and transfer pricing

Diagram Type	Business Process Diagram (BPMN 2.0)
Path	Shared documents / Sub-Processes (L2) / Draft L3 maps
Author	Amber Barber
Revision Number	1
Last modified	Apr 20, 2016
Diagram Link	https://editor.signavio.com/p/editor?id=1915b8559e8c4a6c8d7832dad7504a6e

8.1 Diagram

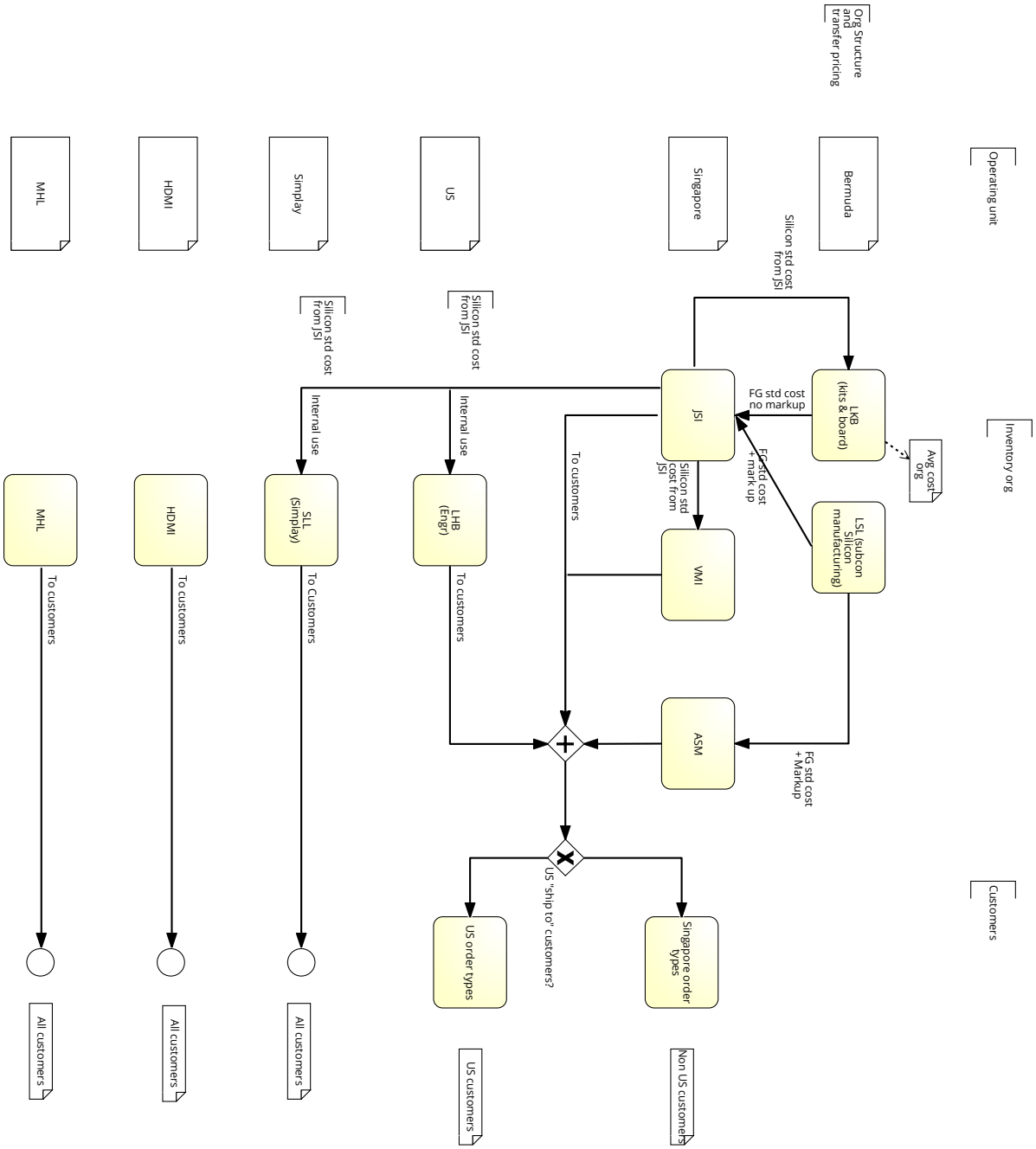

8.2 Description

Not actually a process flow - move somewhere else

8.3 Elements

Process elements

LKB (kits & board)

Task

Data objects: Avg cost org

JSI

Task

VMI

Task

LHB (Engr)

Task

LSL (subcon Silicon manufacturing)

Task

ASM

Task

Parallel Gateway

Parallel Gateway

US "ship to" customers?

Data-based Exclusive (XOR) Gateway

Singapore order types

Task

US order types

Task

SLL (Simplay)

Task

HDMI

Task

MHL

Task

Start Event

Start Event

Start Event

Start Event

Start Event

Start Event

Data / IT-Systems

All customers

Data Object

All customers

Data Object

All customers

Data Object

Avg cost org

Data Object

Bermuda

Data Object

HDMI

Data Object

MHL

Data Object

MHL

Data Object

Non US customers

Data Object

Simplay

Data Object

Singapore

Data Object

US

Data Object

US

Data Object

US customers

Data Object

9 Export Screen (GTM)

Diagram Type	Business Process Diagram (BPMN 2.0)
Path	Shared documents / Sub-Processes (L2)
Author	Amber Barber
Revision Number	4
Last modified	May 20, 2016
Diagram Link	https://editor.signavio.com/p/editor?id=0974aa4f6af349d58e2f1a75b1769cc6

9.1 Diagram

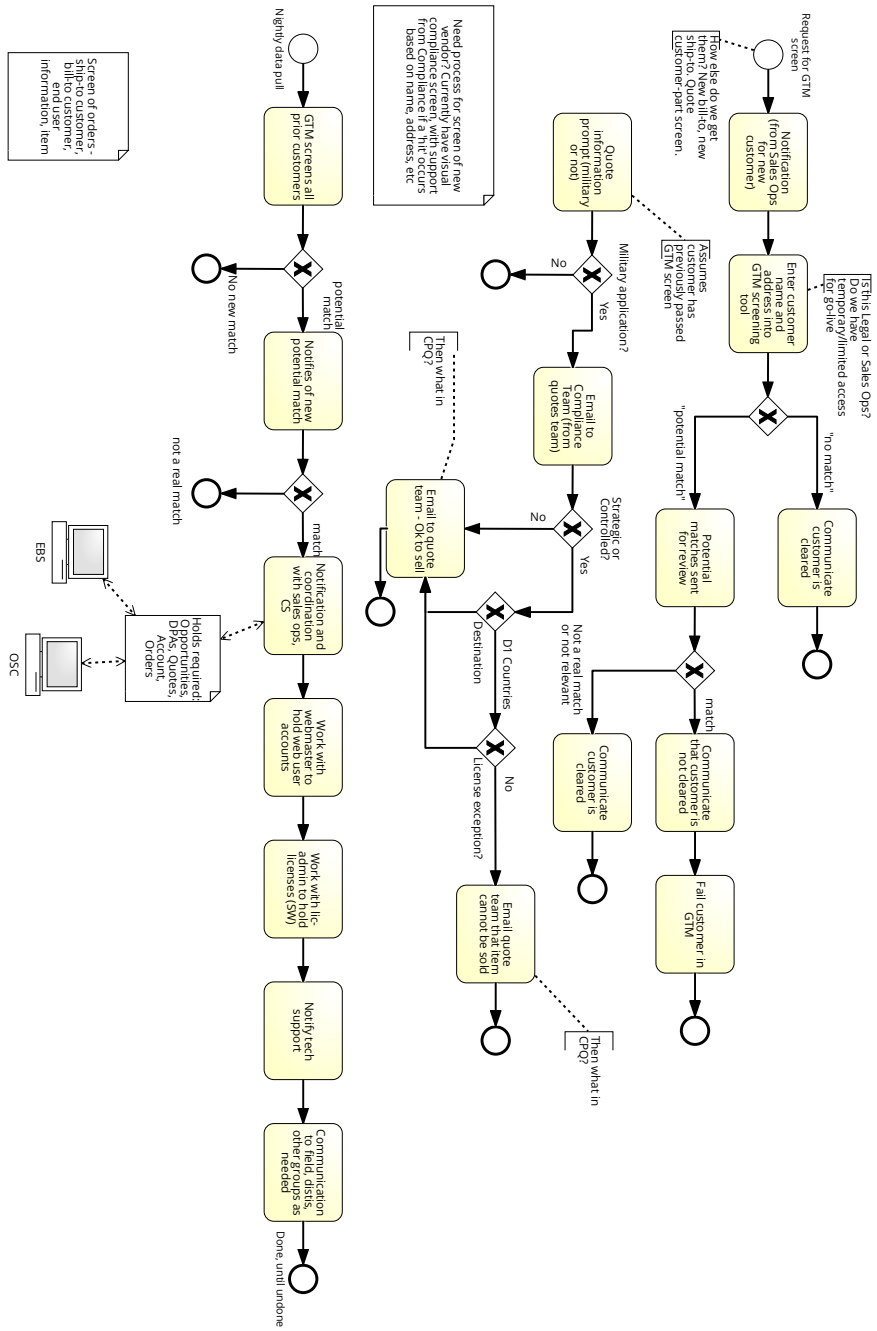

9.2 Elements

Process elements

Nightly data pull

Start Event

GTM screens all prior customers

Task

Data-based Exclusive (XOR) Gateway

Data-based Exclusive (XOR) Gateway

Notifies of new potential match

Task

Data-based Exclusive (XOR) Gateway

Data-based Exclusive (XOR) Gateway

Notification and coordination with sales ops, CS

Task

Data objects: Holds required: Opportunities, DPAs, Quotes, Account, Orders

Work with webmaster to hold web user accounts

Task

Work with lic-admin to hold licenses (SW)

Task

Notify tech support

Task

Communication to field, distis, other groups as needed

Task

Done, until undone

End Event

End Event

End Event

End Event

End Event

Request for GTM screen

Start Event

Notification (from Sales Ops for new customer)

Task

Enter customer name and address into GTM screening tool

Task

Data-based Exclusive (XOR) Gateway

Data-based Exclusive (XOR) Gateway

Communicate customer is cleared

Task

End Event

End Event

Potential matches sent for review

Task

Data-based Exclusive (XOR) Gateway

Data-based Exclusive (XOR) Gateway

Communicate that customer is not cleared

Task

Fail customer in GTM

Task

End Event

End Event

Communicate customer is cleared

Task

End Event

End Event

Quote information prompt (military or not)

Task

Military application?

Data-based Exclusive (XOR) Gateway

Email to Compliance Team (from quotes team)

Task

Strategic or Controlled?

Data-based Exclusive (XOR) Gateway

Destination

Data-based Exclusive (XOR) Gateway

License exception?

Data-based Exclusive (XOR) Gateway

Email quote team that item cannot be sold

Task

End Event

End Event

Email to quote team - Ok to sell

Task

End Event

End Event

End Event

End Event

Data / IT-Systems

EBS

IT System

Oracle's e-Business supply chain management system. Also known as an ERP system.

Dictionary entries: EBS : Oracle's e-Business supply chain management system. Also known as an ERP system.

Holds required: Opportunities, DPAs, Quotes, Account, Orders

Data Object

Need process for screen of new vendor? Currently have visual compliance screen, with support from Compliance if a 'hit' occurs based on name, address, etc

Data Object

OSC

IT System

Oracle Sales Cloud

Dictionary entries: OSC: Oracle Sales Cloud

Screen of orders - ship-to customer, bill-to customer, end user information, item

Data Object

9.3 Linked dictionary entries

EBS

Oracle's e-Business supply chain management system. Also known as an ERP system.

OSC

Oracle Sales Cloud

10 Finance Record to Report Processes

Diagram Type	Business Process Diagram (BPMN 2.0)
Path	Shared documents / Sub-Processes (L2)
Author	Amber Barber
Revision Number	8
Last modified	Mar 18, 2016
Diagram Link	https://editor.signavio.com/p/editor?id=38e057683f7e4654b4cf2e01ad5001d9

10.1 Diagram

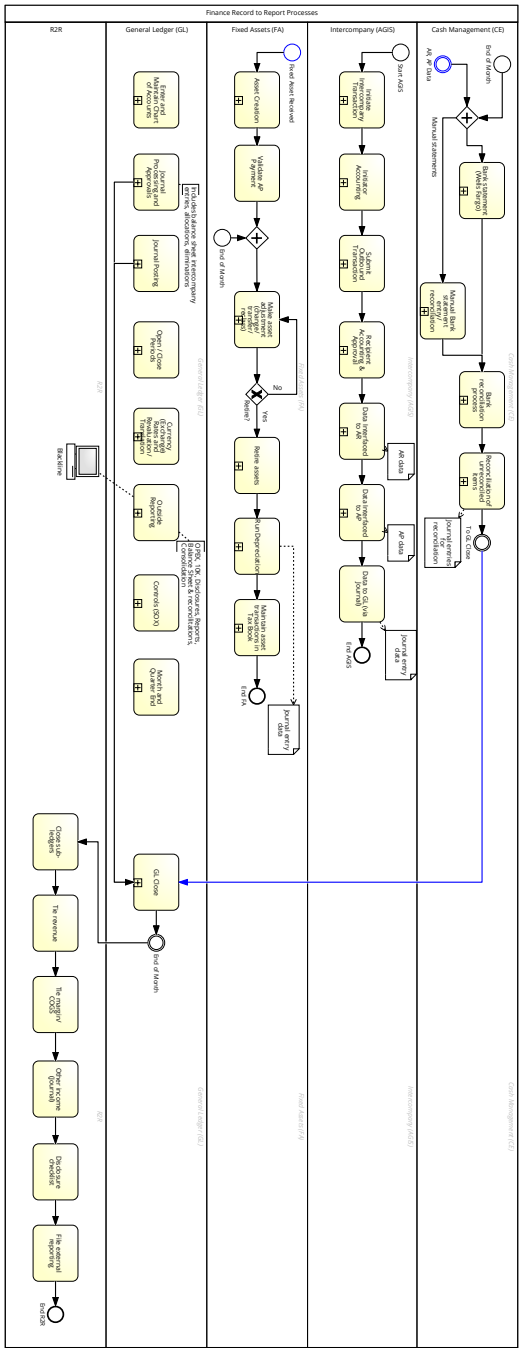

10.2 Description

Cash (CE), Intercompany transfers (AGIS), FA, GL high-level processes

10.3 Elements

Process elements

Start AGIS

Start Event

Organization units: Finance Record to Report Processes - Intercompany (AGIS)

Initiate Intercompany Transaction

Collapsed Subprocess

Organization units: Finance Record to Report Processes - Intercompany (AGIS)

Initiator Accounting

Collapsed Subprocess

Organization units: Finance Record to Report Processes - Intercompany (AGIS)

Submit Outbound Transaction

Collapsed Subprocess

Organization units: Finance Record to Report Processes - Intercompany (AGIS)

Recipient Accounting & Approval

Collapsed Subprocess

Organization units: Finance Record to Report Processes - Intercompany (AGIS)

Data Interfaced to AR

Collapsed Subprocess

Organization units: Finance Record to Report Processes - Intercompany (AGIS)

Data objects: AR data

Data Interfaced to AP

Collapsed Subprocess

Organization units: Finance Record to Report Processes - Intercompany (AGIS)

Data objects: AP data

Data to GL (via Journal)

Task

Organization units: Finance Record to Report Processes - Intercompany (AGIS)

Data objects: Journal entry data

End AGIS

End Event

Organization units: Finance Record to Report Processes - Intercompany (AGIS)

Fixed Asset Received

Start Event

Organization units: Finance Record to Report Processes - Fixed Assets (FA)

Asset Creation

Collapsed Subprocess

Organization units: Finance Record to Report Processes - Fixed Assets (FA)

Validate AP Payment

Task

Organization units: Finance Record to Report Processes - Fixed Assets (FA)

End of Month

Start Event

Organization units: Finance Record to Report Processes - Cash Management (CE)

AR, AP Data

Intermediate Event

Organization units: Finance Record to Report Processes - Cash Management (CE)

Parallel Gateway

Parallel Gateway

Organization units: Finance Record to Report Processes - Cash Management (CE)

Manual Bank statement entry/ reconciliation

Collapsed Subprocess

Organization units: Finance Record to Report Processes - Cash Management (CE)

Bank statement (Wells Fargo)

Collapsed Subprocess

Organization units: Finance Record to Report Processes - Cash Management (CE)

Bank reconciliation process

Collapsed Subprocess

Organization units: Finance Record to Report Processes - Cash Management (CE)

Reconciliation of unreconciled items

Collapsed Subprocess

Organization units: Finance Record to Report Processes - Cash Management (CE)

Data objects: Journal entries for reconciliation

To GL Close

Intermediate Event

Organization units: Finance Record to Report Processes - Cash Management (CE)

Journal Processing and Approvals

Collapsed Subprocess

Organization units: Finance Record to Report Processes - General Ledger (GL)

End of Month

Start Event

Organization units: Finance Record to Report Processes - Fixed Assets (FA)

Parallel Gateway

Parallel Gateway

Organization units: Finance Record to Report Processes - Fixed Assets (FA)

Make asset adjustment (change/ transfer/ reclass)

Collapsed Subprocess

Organization units: Finance Record to Report Processes - Fixed Assets (FA)

Retire?

Data-based Exclusive (XOR) Gateway

Organization units: Finance Record to Report Processes - Fixed Assets (FA)

Retire assets

Collapsed Subprocess

Organization units: Finance Record to Report Processes - Fixed Assets (FA)

Run Depreciation

Collapsed Subprocess

Organization units: Finance Record to Report Processes - Fixed Assets (FA)

Data objects: Journal entry data

Maintain asset transactions in Tax Book

Collapsed Subprocess

Organization units: Finance Record to Report Processes - Fixed Assets (FA)

End FA

End Event

Organization units: Finance Record to Report Processes - Fixed Assets (FA)

Journal Posting

Collapsed Subprocess

Organization units: Finance Record to Report Processes - General Ledger (GL)

GL Close

Collapsed Subprocess

Organization units: Finance Record to Report Processes - General Ledger (GL)

End of Month

Intermediate Event

Organization units: Finance Record to Report Processes - General Ledger (GL)

Close sub-ledgers

Task

Organization units: Finance Record to Report Processes - R2R

Tie revenue

Task

Organization units: Finance Record to Report Processes - R2R

Tie margin/ COGS

Task

Organization units: Finance Record to Report Processes - R2R

Other income (Journal)

Task

Organization units: Finance Record to Report Processes - R2R

Disclosure checklist

Task

Organization units: Finance Record to Report Processes - R2R

File external reporting

Task

Organization units: Finance Record to Report Processes - R2R

End R2R

End Event

Organization units: Finance Record to Report Processes - R2R

Enter and Maintain Chart of Accounts

Collapsed Subprocess

Organization units: Finance Record to Report Processes - General Ledger (GL)

Open / Close Periods

Collapsed Subprocess

Organization units: Finance Record to Report Processes - General Ledger (GL)

Currency (Exchange) Rates and Revaluation/ Translation

Collapsed Subprocess

Organization units: Finance Record to Report Processes - General Ledger (GL)

Outside Reporting

Collapsed Subprocess

Organization units: Finance Record to Report Processes - General Ledger (GL)

IT Systems: Blackline

Controls (SOX)

Collapsed Subprocess

Organization units: Finance Record to Report Processes - General Ledger (GL)

Month and Quarter End

Collapsed Subprocess

Organization units: Finance Record to Report Processes - General Ledger (GL)

Organization units

Cash Management (CE)

Lane

Organization unit: Finance Record to Report Processes

Finance Record to Report Processes

Pool

Fixed Assets (FA)

Lane

Organization unit: Finance Record to Report Processes

General Ledger (GL)

Lane

Organization unit: Finance Record to Report Processes

Intercompany (AGIS)

Lane

Organization unit: Finance Record to Report Processes

R2R

Lane

Organization unit: Finance Record to Report Processes

Data / IT-Systems

AP data

Data Object

Organization unit: Finance Record to Report Processes - Intercompany (AGIS)

AR data

Data Object

Organization unit: Finance Record to Report Processes - Intercompany (AGIS)

Journal entries for reconciliation

Data Object

Organization unit: Finance Record to Report Processes - Cash Management (CE)

Journal entry data

Data Object

Organization unit: Finance Record to Report Processes - Fixed Assets (FA)

Journal entry data

Data Object

Organization unit: Finance Record to Report Processes - Intercompany (AGIS)

10.4 Linked dictionary entries

Blackline

External system

11 HR Benefits Administration

Diagram Type	Value Chain
Path	Shared documents / Sub-Processes (L2)
Author	Amber Barber
Revision Number	5
Last modified	Mar 26, 2016
Diagram Link	https://editor.signavio.com/p/editor?id=5df50e717951476d8802bf04c2dace1b

11.1 Diagram

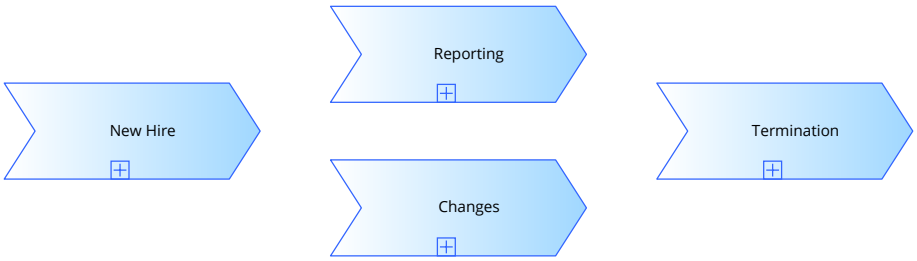

11.2 Description

Top level process for Medical, Dental, FSA, and other benefits processing

11.3 Elements

Process elements

New Hire

Collapsed Process

Process link: HR Benefits New Hire (L3) (https://editor.signavio.com/p/model/a6a29e511f82442395ce0e0e5fc26186)

Reporting

Collapsed Process

Process link: HR Benefits Reporting (L3) (https://editor.signavio.com/p/model/db0b6ff034bf443593a537cd58b52e48)

Changes

Collapsed Process

Process link: HR Benefits Changes (L3) (https://editor.signavio.com/p/model/a29b565ac59c462a965bf2f29fb54dee)

Termination

Collapsed Process

Process link: HR Benefits Termination Process (L3) (https://editor.signavio.com/p/model/b0040473252244b48dd78f8b17309ef5)

12 HR Compensation Benefits

Diagram Type	Business Process Diagram (BPMN 2.0)
Path	Shared documents / Sub-Processes (L2)
Author	Amber Barber
Revision Number	5

Last modified	Mar 23, 2016
Diagram Link	https://editor.signavio.com/p/editor?id=65da8137e70c4074ab2dff30aea8fdeb

12.1 Diagram

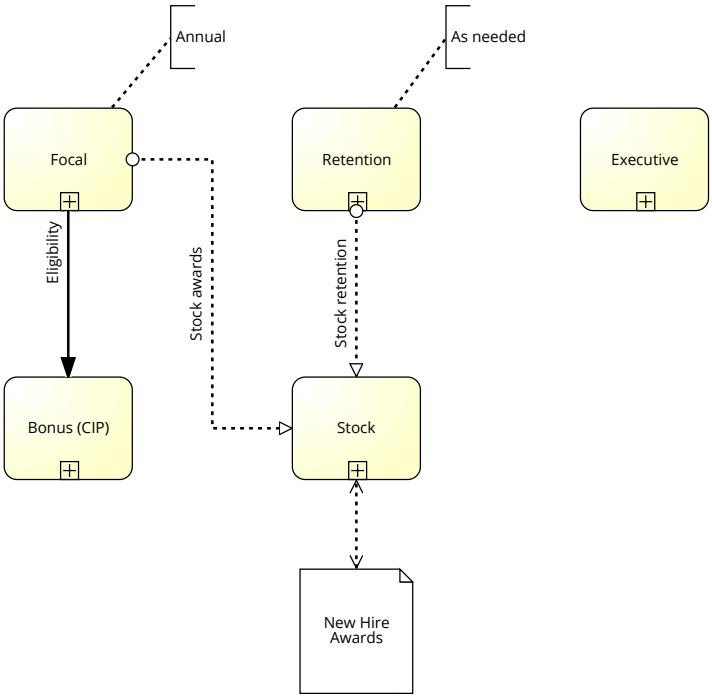

12.2 Description

Pay, stock, retention and bonus

12.3 Elements

Process elements

Focal

Collapsed Subprocess

Subprocess reference: HR Focal-Related Compensation (L3) (https://editor.signavio.com/p/model/10a43a6240a142aa913acdaf865ddf83)

Bonus (CIP)

Collapsed Subprocess

Subprocess reference: HR Bonus Compensation (L3) (https://editor.signavio.com/p/model/69ab7e7515df4d51b85b2aa6a76ff296)

Retention

Collapsed Subprocess

Subprocess reference: HR Retention Compensation (L3) (https://editor.signavio.com/p/model/2a988752556b4d2e954acfc39055f366)

Stock

Collapsed Subprocess

Data objects: New Hire Awards

Subprocess reference: HR Stock Compensation (L3) (https://editor.signavio.com/p/model/64036ff8d0c44947b43334778a476621)

Executive

Collapsed Subprocess

Subprocess reference: HR Executive Compensation (L3) (https://editor.signavio.com/p/model/401070c191c94db4bd608a18e95e1037)

Data / IT-Systems

New Hire Awards

Data Object

13 HR Performance Management Processes

Diagram Type	Business Process Diagram (BPMN 2.0)
Path	Shared documents / Sub-Processes (L2)
Author	Amber Barber
Revision Number	2
Last modified	Mar 14, 2016
Diagram Link	https://editor.signavio.com/p/editor?id=d0e6b0b47f6b49cf8eca544beafbd37b

13.1 Diagram

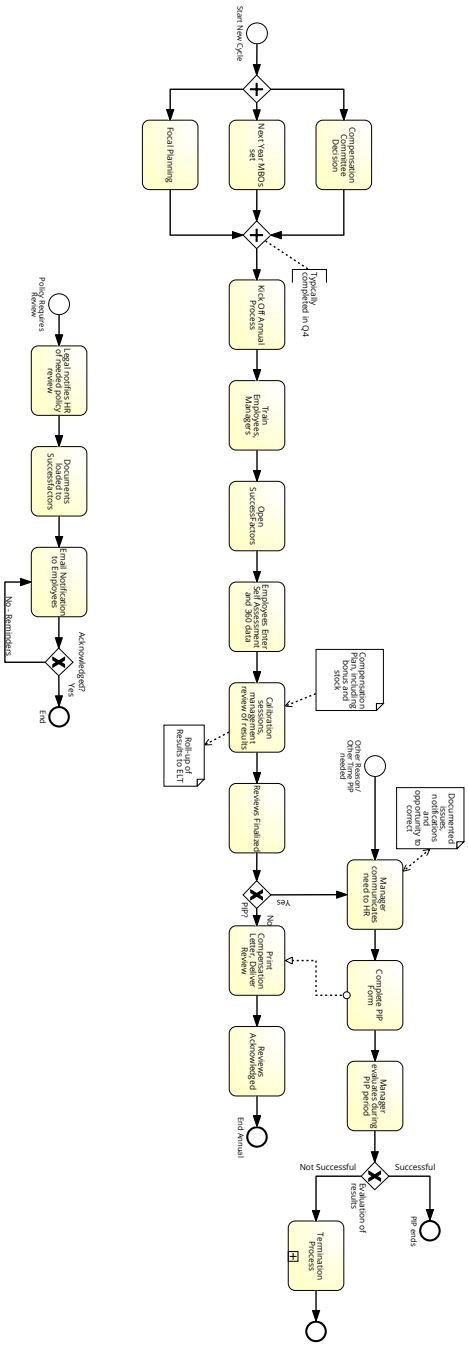

13.2 Description

Annual Review, Policy Review, and PIP

13.3 Elements

Process elements

Start New Cycle

Start Event

Parallel Gateway

Parallel Gateway

Compensation Committee Decision

Task

Next Year MBOs set

Task

Focal Planning

Task

Parallel Gateway

Parallel Gateway

Kick Off Annual Process

Task

Train Employees, Managers

Task

Open SuccessFactors

Task

Employees Enter Self Assessment and 360 data

Task

Calibration sessions, management review of results

Task

Data objects:

- Compensation Plan, including bonus and stock
- Roll-up of Results to ELT

Reviews Finalized

Task

PIP?

Data-based Exclusive (XOR) Gateway

Print Compensation Letter, Deliver Review

Task

Reviews Acknowledged

Task

End Annual

End Event

Policy Requires Review

Start Event

Legal notifies HR of needed policy review

Task

Documents loaded to Successfactors

Task

Email Notification to Employees

Task

Acknowledged?

Data-based Exclusive (XOR) Gateway

End

End Event

Other Reason/ Other Time PIP needed

Start Event

Manager communicates need to HR

Task

Data objects: Documented issues, notifications and opportunity to correct

Complete PIP Form

Task

Manager evaluates during PIP period

Task

Evaluation of results

Data-based Exclusive (XOR) Gateway

PIP ends

End Event

Termination Process

Collapsed Subprocess

End Event

End Event

Data / IT-Systems

Compensation Plan, including bonus and stock

Data Object

Documented issues, notifications and opportunity to correct

Data Object

Roll-up of Results to ELT

Data Object

14 HR Staffing Process

Diagram Type	Business Process Diagram (BPMN 2.0)
Path	Shared documents / Sub-Processes (L2)
Author	Amber Barber
Revision Number	3
Last modified	May 6, 2016
Diagram Link	https://editor.signavio.com/p/editor?id=637d049832d74f6283d5e05e2e9b829f

14.1 Diagram

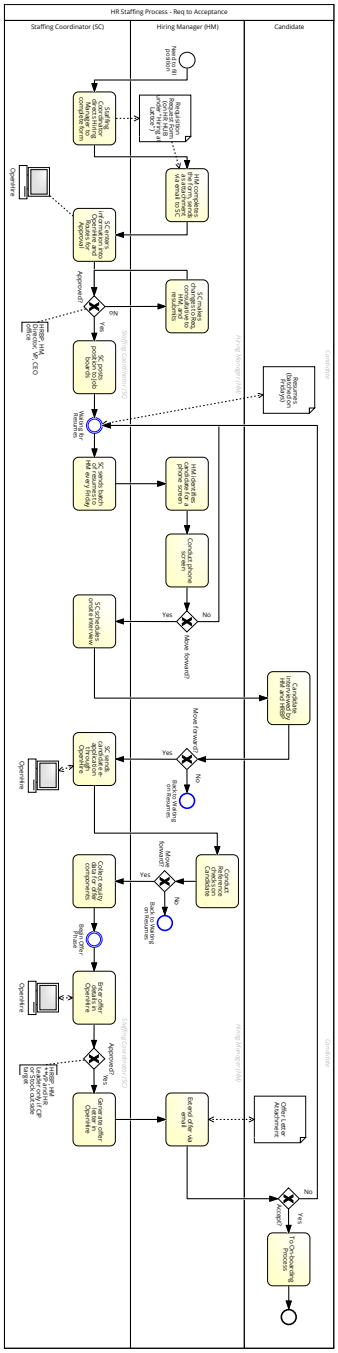

14.2 Description

Requisition, Interviewing, Offer and Acceptance

14.3 Elements

Process elements

Need to fill position

Start Event

Organization units: HR Staffing Process - Req to Acceptance - Hiring Manager (HM)

Staffing Coordinator directs Hiring Manager to complete form

Task

Organization units: HR Staffing Process - Req to Acceptance - Staffing Coordinator (SC)

Data objects: Requisition Request Form (on HR HUB under "Hiring at Lattice")

HM completes the form, sends as attachment via email to SC

Task

Organization units: HR Staffing Process - Req to Acceptance - Hiring Manager (HM)

Data objects: Requisition Request Form (on HR HUB under "Hiring at Lattice")

SC enters information into OpenHire and Routes for Approval

Task

Organization units: HR Staffing Process - Req to Acceptance - Staffing Coordinator (SC)

IT Systems: OpenHire

Approved?

Data-based Exclusive (XOR) Gateway

Organization units: HR Staffing Process - Req to Acceptance - Staffing Coordinator (SC)

SC makes changes to Req, consultative to HM, and resubmits

Task

Organization units: HR Staffing Process - Req to Acceptance - Hiring Manager (HM)

SC posts position to Job boards

Task

Organization units: HR Staffing Process - Req to Acceptance - Staffing Coordinator (SC)

Waiting for Resumes

Intermediate Event

Organization units: HR Staffing Process - Req to Acceptance - Staffing Coordinator (SC)

Data objects: Resumes (batched on Fridays)

SC sends batch of resumes to HM every Friday

Task

Organization units: HR Staffing Process - Req to Acceptance - Staffing Coordinator (SC)

HM identifies candidate for a phone screen

Task

Organization units: HR Staffing Process - Req to Acceptance - Hiring Manager (HM)

Conduct phone screen

Task

Organization units: HR Staffing Process - Req to Acceptance - Hiring Manager (HM)

Move forward?

Data-based Exclusive (XOR) Gateway

Organization units: HR Staffing Process - Req to Acceptance - Hiring Manager (HM)

SC schedules onsite interview

Task

Organization units: HR Staffing Process - Req to Acceptance - Staffing Coordinator (SC)

Candidate interviewed by HM and HRBP

Task

Organization units: HR Staffing Process - Req to Acceptance - Candidate

Move forward?

Data-based Exclusive (XOR) Gateway

Organization units: HR Staffing Process - Req to Acceptance - Hiring Manager (HM)

Back to Waiting on Resumes

End Event

Organization units: HR Staffing Process - Req to Acceptance - Hiring Manager (HM)

SC sends candidate e-application through OpenHire

Task

Organization units: HR Staffing Process - Req to Acceptance - Staffing Coordinator (SC)

IT Systems: OpenHire

Conduct Reference checks on Candidate

Task

Organization units: HR Staffing Process - Req to Acceptance - Hiring Manager (HM)

Move forward?

Data-based Exclusive (XOR) Gateway

Organization units: HR Staffing Process - Req to Acceptance - Hiring Manager (HM)

Back to Waiting on Resumes

End Event

Organization units: HR Staffing Process - Req to Acceptance - Hiring Manager (HM)

Collect equity data for offer components

Task

Organization units: HR Staffing Process - Req to Acceptance - Staffing Coordinator (SC)

Begin Offer Phase

Intermediate Event

Organization units: HR Staffing Process - Req to Acceptance - Staffing Coordinator (SC)

Enter offer details in OpenHire

Task

Organization units: HR Staffing Process - Req to Acceptance - Staffing Coordinator (SC)

IT Systems: OpenHire

Approved?

Data-based Exclusive (XOR) Gateway

Organization units: HR Staffing Process - Req to Acceptance - Staffing Coordinator (SC)

Generate offer letter in OpenHire

Task

Organization units: HR Staffing Process - Req to Acceptance - Staffing Coordinator (SC)

Extend offer via email

Task

Organization units: HR Staffing Process - Req to Acceptance - Hiring Manager (HM)

Data objects: Offer Letter Attachment

Accept?

Data-based Exclusive (XOR) Gateway

Organization units: HR Staffing Process - Req to Acceptance - Candidate

To On-boarding Process

Task

Organization units: HR Staffing Process - Req to Acceptance - Candidate

End Event

End Event

Organization units: HR Staffing Process - Req to Acceptance - Candidate

Organization units

Candidate

Lane

Organization unit: HR Staffing Process - Req to Acceptance

Hiring Manager (HM)

Lane

Organization unit: HR Staffing Process - Req to Acceptance

HR Staffing Process - Req to Acceptance

Pool

Staffing Coordinator (SC)

Lane

Organization unit: HR Staffing Process - Req to Acceptance

Data / IT-Systems

Offer Letter Attachment

Data Object

Organization unit: HR Staffing Process - Req to Acceptance - Candidate

OpenHire

IT System

Organization unit: HR Staffing Process - Req to Acceptance - Staffing Coordinator (SC)

OpenHire

IT System

Organization unit: HR Staffing Process - Req to Acceptance - Staffing Coordinator (SC)

OpenHire

IT System

Organization unit: HR Staffing Process - Req to Acceptance - Staffing Coordinator (SC)

Requisition Request Form (on HR HUB under "Hiring at Lattice")

Data Object

Organization unit: HR Staffing Process - Req to Acceptance - Hiring Manager (HM)

Resumes (batched on Fridays)

Data Object

Organization unit: HR Staffing Process - Req to Acceptance - Candidate

15 HR Training Process - New Training Class

Diagram Type	Business Process Diagram (BPMN 2.0)
Path	Shared documents / Sub-Processes (L2)
Author	Amber Barber
Revision Number	5
Last modified	May 20, 2016
Diagram Link	https://editor.signavio.com/p/editor?id=cc42daf2a2b84a9796f40ab701048dd9

15.1 Diagram

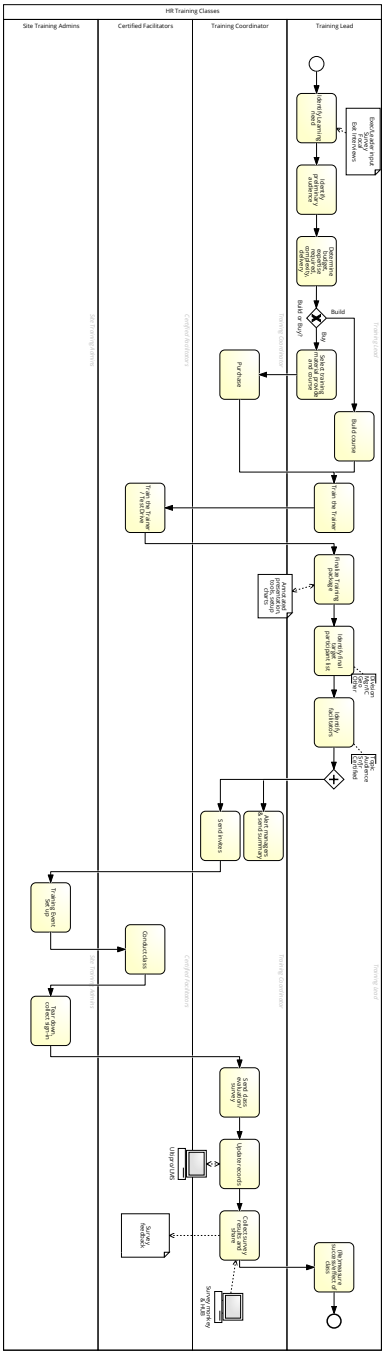

15.2 Elements

Process elements

Start Event

Start Event

Organization units: HR Training Classes - Training Lead

Identify Learning need

Task

Organization units: HR Training Classes - Training Lead

Data objects: Exec/Leader input Survey Focal Exit Interviews

Identify preliminary audience

Task

Organization units: HR Training Classes - Training Lead

Determine budget, expertise required, complexity, delivery

Task

Organization units: HR Training Classes - Training Lead

Build or Buy?

Data-based Exclusive (XOR) Gateway

Organization units: HR Training Classes - Training Lead

Build course

Task

Organization units: HR Training Classes - Training Lead

Select training material provide and course

Task

Organization units: HR Training Classes - Training Lead

Purchase

Task

Organization units: HR Training Classes - Training Coordinator

Train the Trainer

Task

Organization units: HR Training Classes - Training Lead

Train the Trainer / Test Drive

Task

Organization units: HR Training Classes - Certified Facilitators

Finalize Training package

Task

Organization units: HR Training Classes - Training Lead

Data objects: Annotated presentation, tools, setup charts

Identify final target participant list

Task

Organization units: HR Training Classes - Training Lead

Identify facilitators

Task

Organization units: HR Training Classes - Training Lead

Parallel Gateway

Parallel Gateway

Organization units: HR Training Classes - Training Lead

Alert managers & send summary

Task

Organization units: HR Training Classes - Training Coordinator

Send invites

Task

Organization units: HR Training Classes - Training Coordinator

Training Event Set up

Task

Organization units: HR Training Classes - Site Training Admins

Conduct class

Task

Organization units: HR Training Classes - Certified Facilitators

Tear down, collect sign-in

Task

Organization units: HR Training Classes - Site Training Admins

Send class evaluation/ survey

Task

Organization units: HR Training Classes - Training Coordinator

Update records

Task

Organization units: HR Training Classes - Training Coordinator

IT Systems: Ultipro/LMS

Collect survey results and share

Task

Organization units: HR Training Classes - Training Coordinator

Data objects: Survey feedback

IT Systems: Survey monkey & HUB

(Re)measure success/effect of class

Task

Organization units: HR Training Classes - Training Lead

End Event

End Event

Organization units: HR Training Classes - Training Lead

Organization units

Certified Facilitators

Lane

Organization unit: HR Training Classes

HR Training Classes

Pool

Site Training Admins

Lane

Organization unit: HR Training Classes

Training Coordinator

Lane

Organization unit: HR Training Classes

Training Lead

Lane

Organization unit: HR Training Classes

Data / IT-Systems

Annotated presentation, tools, setup charts

Data Object

Organization unit: HR Training Classes - Training Coordinator

Exec/Leader input Survey Focal Exit Interviews

Data Object

Organization unit: HR Training Classes - Training Lead

Survey feedback

Data Object

Organization unit: HR Training Classes - Certified Facilitators

Survey monkey & HUB

IT System

The Lattice SharePoint-driven intranet. Comprised of department and team sites with libraries and lists under varying access control.

Organization unit: HR Training Classes - Training Coordinator

Dictionary entries: HUB : The Lattice SharePoint-driven intranet. Comprised of department and team sites with libraries and lists under varying access control.

Ultipro/LMS

IT System

Organization unit: HR Training Classes - Certified Facilitators

15.3 Linked dictionary entries

HUB

The Lattice SharePoint-driven intranet. Comprised of department and team sites with libraries and lists under varying access control.

16 Lattice Manufacturing Process

Diagram Type	Business Process Diagram (BPMN 2.0)
Path	Shared documents / Sub-Processes (L2)
Author	Amber Barber
Revision Number	5
Last modified	Jun 2, 2016
Diagram Link	https://editor.signavio.com/p/editor?id=b5817371789d4b6e814541530801e8e1

16.1 Diagram

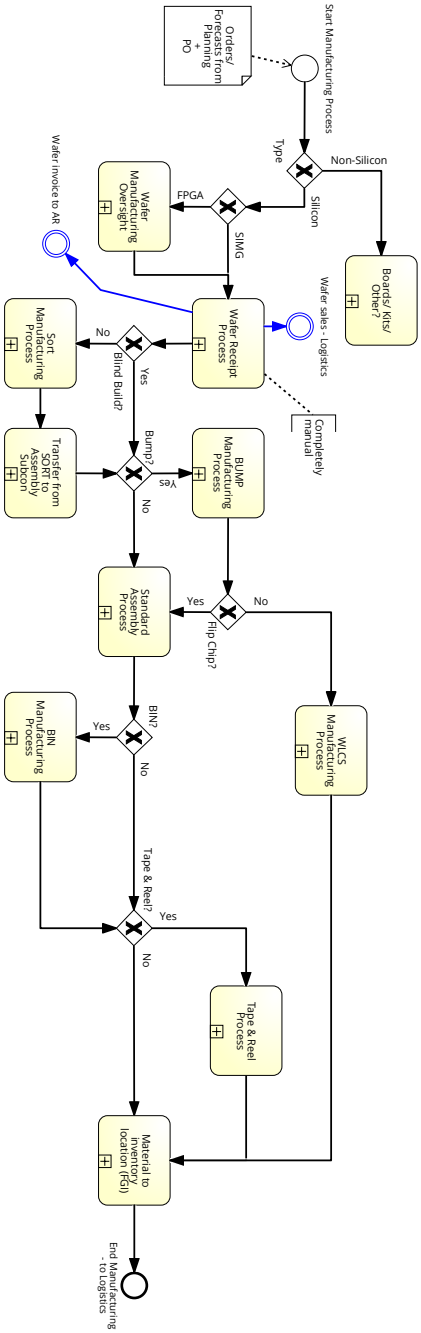

16.2 Description

Manufacturing as managed through Oracle, including SORT, Assembly, Test

16.3 Elements

Process elements

Start Manufacturing Process

Start Event

Data objects: Orders/ Forecasts from Planning + PO

Type

Data-based Exclusive (XOR) Gateway

Boards/ Kits/ Other?

Collapsed Subprocess

Data-based Exclusive (XOR) Gateway

Data-based Exclusive (XOR) Gateway

Wafer Manufacturing Oversight

Collapsed Subprocess

Wafer Receipt Process

Collapsed Subprocess

Wafer invoice to AR

Intermediate Event

Blind Build?

Data-based Exclusive (XOR) Gateway

Sort Manufacturing Process

Collapsed Subprocess

Subprocess reference: 2.14.10/30 Pre-assembly wafer processing - sort - bump (https://editor.signavio.com/p/model/fd134a902c724a50963f8ba790e85a96)

Transfer from SORT to Assembly Subcon

Collapsed Subprocess

Bump?

Data-based Exclusive (XOR) Gateway

BUMP Manufacturing Process

Collapsed Subprocess

Subprocess reference: 2.14.10/30 Pre-assembly wafer processing - sort - bump (https://editor.signavio.com/p/model/fd134a902c724a50963f8ba790e85a96)

Flip Chip?

Data-based Exclusive (XOR) Gateway

WLCS Manufacturing Process

Collapsed Subprocess

Subprocess reference: 2.14.40 Assembly - WLCS and FlipChip (https://editor.signavio.com/p/model/c105c20a17344462882d0c46d77b9b45)

Standard Assembly Process

Collapsed Subprocess

BIN?

Data-based Exclusive (XOR) Gateway

BIN Manufacturing Process

Collapsed Subprocess

Subprocess reference: 2.14.50 Bin and Tape and Reel lots to FG (https://editor.signavio.com/p/model/99cd08b84c3749feab2b9bb2fce0bd63)

Tape & Reel?

Data-based Exclusive (XOR) Gateway

Tape & Reel Process

Collapsed Subprocess

Subprocess reference: 2.14.50 Bin and Tape and Reel lots to FG (https://editor.signavio.com/p/model/99cd08b84c3749feab2b9bb2fce0bd63)

Material to inventory location (FGI)

Collapsed Subprocess

Subprocess reference: 2.14.40 Manufacturing Test Process (https://editor.signavio.com/p/model/ac48bb346ab345ac9335ae49ca20a337)

End Manufacturing - to Logistics

End Event

Wafer sales - Logistics

Intermediate Event

Data / IT-Systems

Orders/ Forecasts from Planning + PO

Data Object

17 Lattice QA Document Control Process

Diagram Type	Business Process Diagram (BPMN 2.0)
Path	Shared documents / Sub-Processes (L2)
Author	Amber Barber
Revision Number	5
Last modified	May 20, 2016
Diagram Link	https://editor.signavio.com/p/editor?id=f833d96661414e1981f2b1f7985837d9

17.1 Diagram

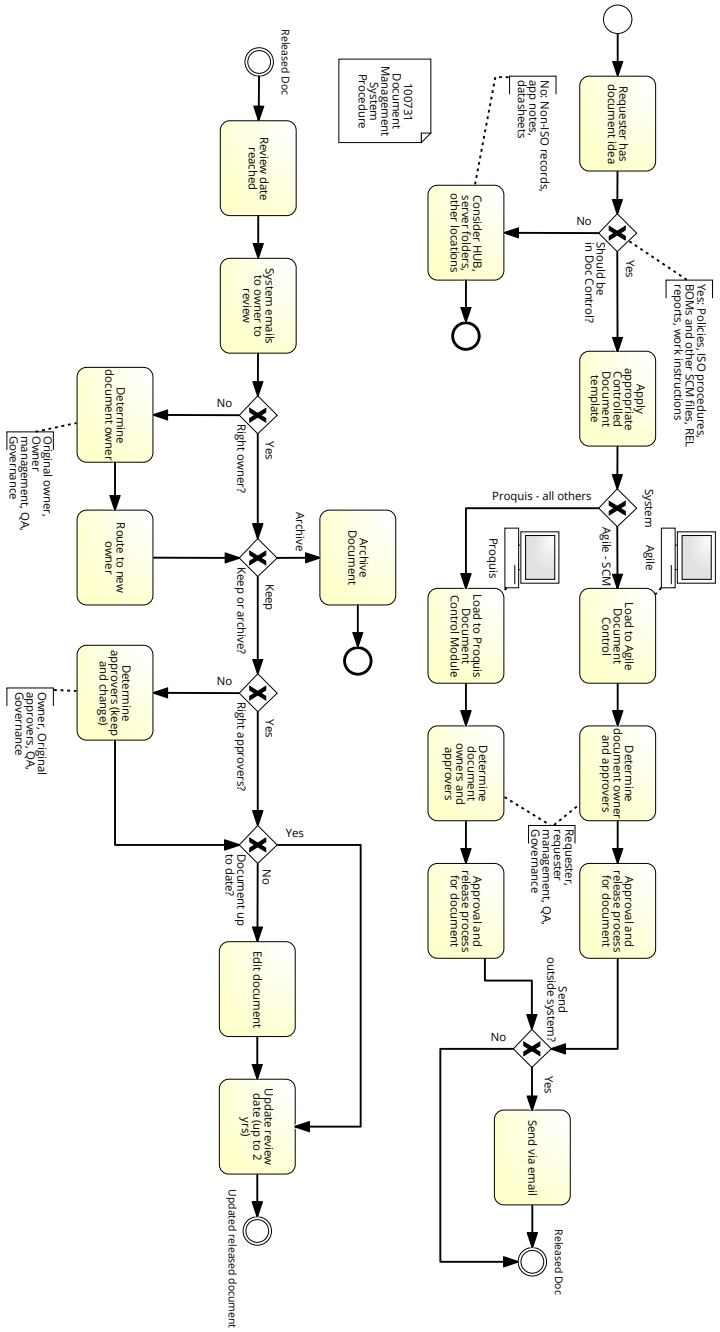

17.2 Description

Controlled documents through Proquis and Agile

17.3 Elements

Process elements

Start Event

Start Event

Requester has document idea

Task

Should be in Doc Control?

Data-based Exclusive (XOR) Gateway

Apply appropriate Controlled Document template

Task

System

Data-based Exclusive (XOR) Gateway

Load to Agile Document Control

Task

IT Systems: Agile

Determine document owner and approvers

Task

Approval and release process for document

Task

Load to Proquis Document Control Module

Task

IT Systems: Proquis

Determine document owners and approvers

Task

Approval and release process for document

Task

Send outside system?

Data-based Exclusive (XOR) Gateway

Send via email

Task

Released Doc

Intermediate Event

Consider HUB, server folders, other locations

Task

End Event

End Event

Released Doc

Intermediate Event

Review date reached

Task

System emails to owner to review

Task

Right owner?

Data-based Exclusive (XOR) Gateway

Determine document owner

Task

Route to new owner

Task

Keep or archive?

Data-based Exclusive (XOR) Gateway

Right approvers?

Data-based Exclusive (XOR) Gateway

Determine approvers (keep and change)

Task

Document up to date?

Data-based Exclusive (XOR) Gateway

Edit document

Task

Update review date (up to 2 yrs)

Task

Updated released document

Intermediate Event

Archive Document

Task

End Event

End Event

Data / IT-Systems

100731 Document Management System Procedure

Data Object

Agile

IT System

Oracle Agile software, where items are created, BOMs are built from items, and routes are set for item builds

Dictionary entries: Agile : Oracle Agile software, where items are created, BOMs are built from items, and routes are set for item builds

Proquis

IT System

Quality Management software package, including document control, issue tracking (CAPA, MRB), and audits

Dictionary entries: Proquis : Quality Management software package, including document control, issue tracking (CAPA, MRB), and audits

17.4 Linked dictionary entries

Agile

Oracle Agile software, where items are created, BOMs are built from items, and routes are set for item builds

Proquis

Quality Management software package, including document control, issue tracking (CAPA, MRB), and audits

18 2.11.20 Demand Forecast to Wafer Plan

Diagram Type	Business Process Diagram (BPMN 2.0)
Path	Shared documents / Sub-Processes (L2) / Level 3 sub-processes
Author	Amber Barber
Revision Number	3
Last modified	May 20, 2016
Diagram Link	https://editor.signavio.com/p/editor?id=c205a9355e034033b8fc7521d69dde80

18.1 Diagram

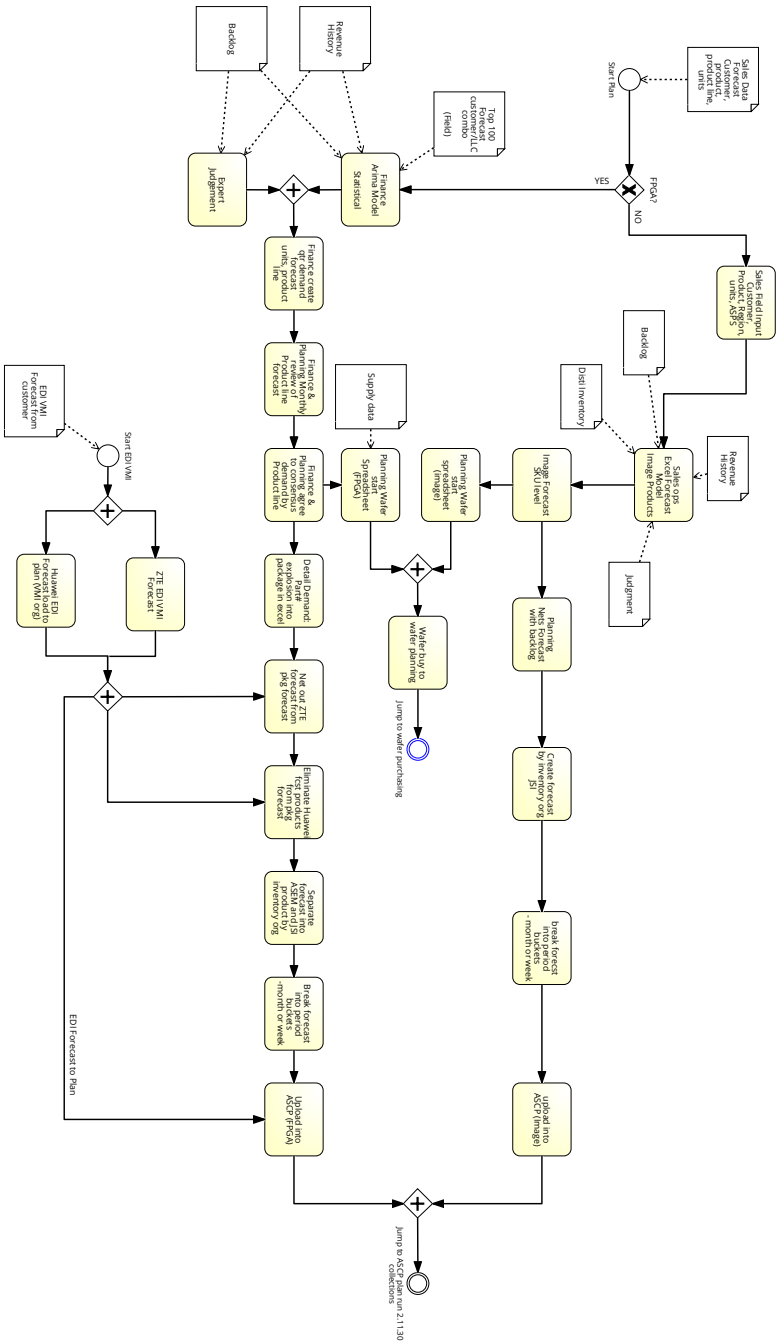

18.2 Description

Team Approved

18.3 Elements

Process elements

Start Plan

Start Event

Data objects: Sales Data Forecast Customer, product, product line, units

FPGA?

Data-based Exclusive (XOR) Gateway

Sales Field Input Customer, Product, Region, units, ASPS

Task

Sales ops Excel Forecast Model Image Products

Task

Data objects:

- Disti Inventory
- Backlog
- Revenue History
- Judgment

Image Forecast SKU level

Task

Planning Nets Forecast with backlog

Task

Create forecast by inventory org JSI

Task

break forecst into period buckets - month or week

Task

upload into ASCP (Image)

Task

Planning Wafer start spreadsheet (image)

Task

Finance Arima Model Statistical

Task

Data objects:

- Backlog
- Revenue History
- Top 100 Forecast customer/LLC combo (Field)

Expert Judgement

Task

Data objects:

- Backlog

Revenue History

Parallel Gateway

Parallel Gateway

Finance create qtr demand forecast units, product line

Task

Finance & Planning Monthly review of Product line forecast

Task

Finance & Planning agree to consensus demand by Product line

Task

Planning Wafer start Spreadsheet (FPGA)

Task

Data objects: Supply data

Parallel Gateway

Parallel Gateway

Wafer buy to wafer planning

Task

Jump to wafer purchasing

Intermediate Event

Detail Demand: Part# explosion into package in excel

Task

Start EDI VMI

Start Event

Data objects: EDI VMI Forecast from customer

Parallel Gateway

Parallel Gateway

ZTE EDI VMI Forecast

Task

Huawei EDI Forecast load to plan (VMI org)

Task

Parallel Gateway

Parallel Gateway

Net out ZTE forecast from pkg forecast

Task

Eliminate Huawei fcst products from pkg forecast

Task

Separate forecast into ASEM and JSI product by inventory org

Task

Break forecast into period buckets -month or week

Task

Upload into ASCP (FPGA)

Task

Parallel Gateway

Parallel Gateway

Jump to ASCP plan run 2.11.30 collections

Intermediate Event

Data / IT-Systems

Backlog

Data Object

Backlog

Data Object

Disti Inventory

Data Object

EDI VMI Forecast from customer

Data Object

Judgment

Data Object

Revenue History

Data Object

Revenue History

Data Object

Sales Data Forecast Customer, product, product line, units

Data Object

Supply data

Data Object

Top 100 Forecast customer/LLC combo (Field)

Data Object

19 2.11.30 planning - data collections and ascp plan

Diagram Type	Business Process Diagram (BPMN 2.0)
Path	Shared documents / Sub-Processes (L2) / Level 3 sub-processes
Author	Amber Barber
Revision Number	3

Last modified May 20, 2016

Diagram Link https://editor.signavio.com/p/editor?id=6de895b076a844eea363f04159ee744b

19.1 Diagram

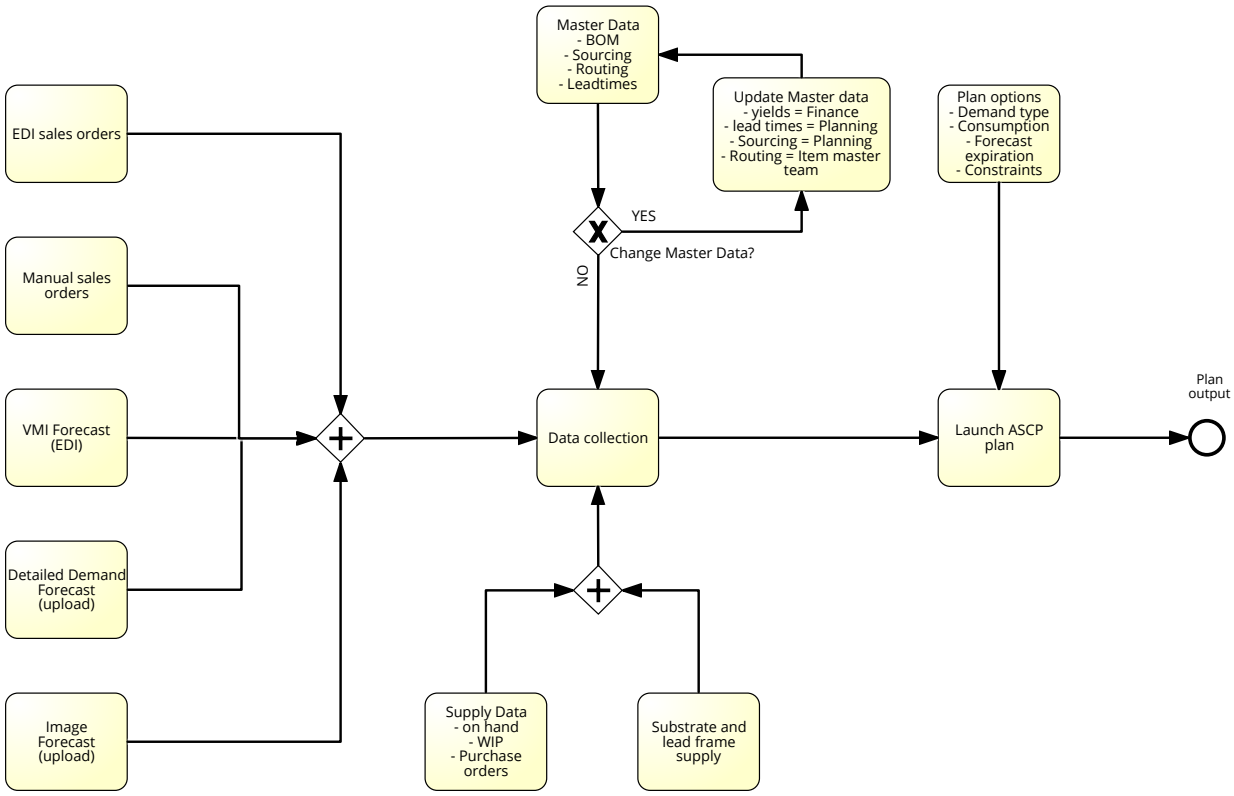

19.2 Description

Team Approved

19.3 Elements

Process elements

EDI sales orders

Task

Manual sales orders

Task

VMI Forecast (EDI)

Task

Detailed Demand Forecast (upload)

Task

Image Forecast (upload)

Task

Parallel Gateway

Parallel Gateway

Supply Data - on hand - WIP - Purchase orders

Task

Substrate and lead frame supply

Task

Parallel Gateway

Parallel Gateway

Plan options - Demand type - Consumption - Forecast expiration - Constraints

Task

Master Data - BOM - Sourcing - Routing - Leadtimes

Task

Data collection

Task

Change Master Data?

Data-based Exclusive (XOR) Gateway

Update Master data - yields = Finance - lead times = Planning - Sourcing = Planning - Routing = Item master team

Task

Launch ASCP plan

Task

Plan output

End Event

20 2.11.50 Planning Process - Shortages

Diagram Type	Business Process Diagram (BPMN 2.0)
Path	Shared documents / Sub-Processes (L2) / Level 3 sub-processes
Author	Amber Barber
Revision Number	3
Last modified	May 20, 2016
Diagram Link	https://editor.signavio.com/p/editor?id=c3c826520bfc4671b29dee4f94df5d0e

20.1 Diagram

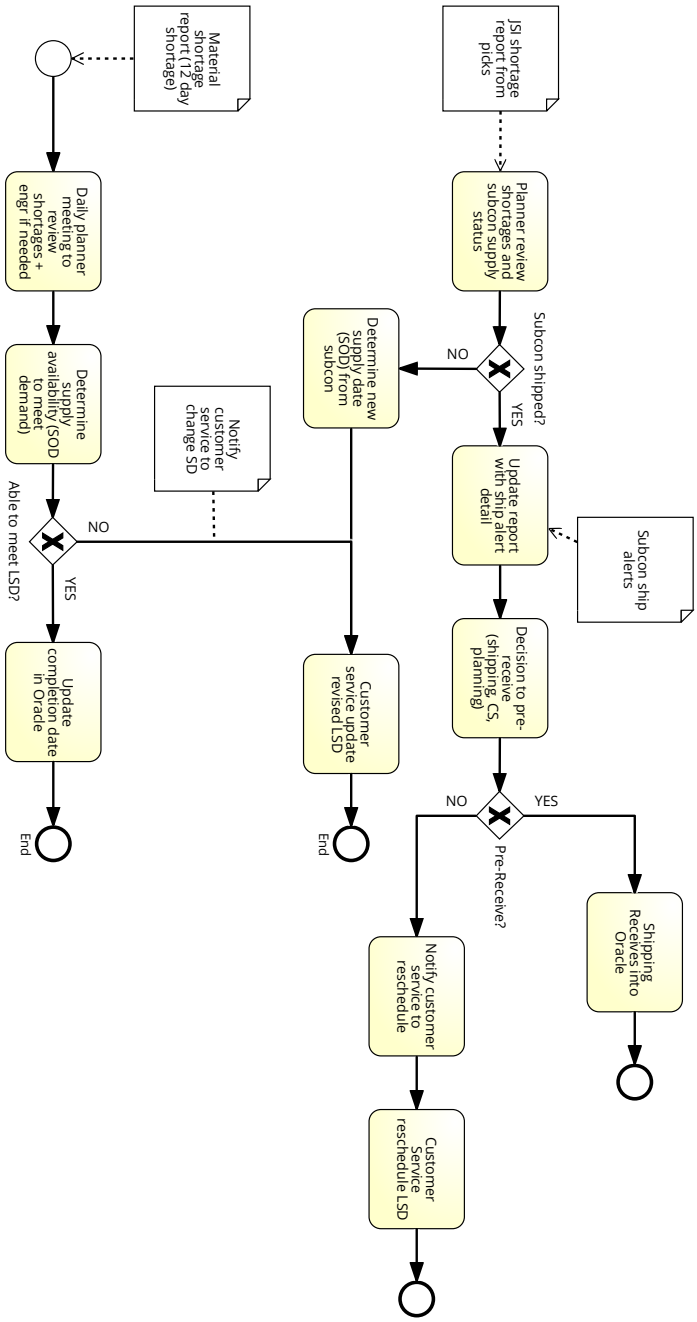

20.2 Description

Team Approved

20.3 Elements

Process elements

Start Event

Start Event

Data objects: Material shortage report (12 day shortage)

Daily planner meeting to review shortages + engr if needed

Task

Determine supply availability (SOD to meet demand)

Task

Able to meet LSD?

Data-based Exclusive (XOR) Gateway

Data objects: Notify customer service to change SD

Update completion date in Oracle

Task

End

End Event

Planner review shortages and subcon supply status

Task

Data objects: JSI shortage report from picks

Subcon shipped?

Data-based Exclusive (XOR) Gateway

Update report with ship alert detail

Task

Data objects: Subcon ship alerts

Decision to pre-receive (shipping, CS, planning)

Task

Pre-Receive?

Data-based Exclusive (XOR) Gateway

Shipping Receives into Oracle

Task

End Event

End Event

Notify customer service to reschedule

Task

Customer Service reschedule LSD

Task

End Event

End Event

Determine new supply date (SOD) from subcon

Task

Customer service update revised LSD

Task

Data objects: Notify customer service to change SD

End

End Event

Data / IT-Systems

JSI shortage report from picks

Data Object

Material shortage report (12 day shortage)

Data Object

Notify customer service to change SD

Data Object

Subcon ship alerts

Data Object

21 2.11.60 Plan Suggest Buy - Wafers

Diagram Type	Business Process Diagram (BPMN 2.0)
Path	Shared documents / Sub-Processes (L2) / Level 3 sub-processes
Author	Amber Barber
Revision Number	6
Last modified	May 20, 2016
Diagram Link	https://editor.signavio.com/p/editor?id=3ca434d4560f479099c61c1b95a72363

21.1 Diagram

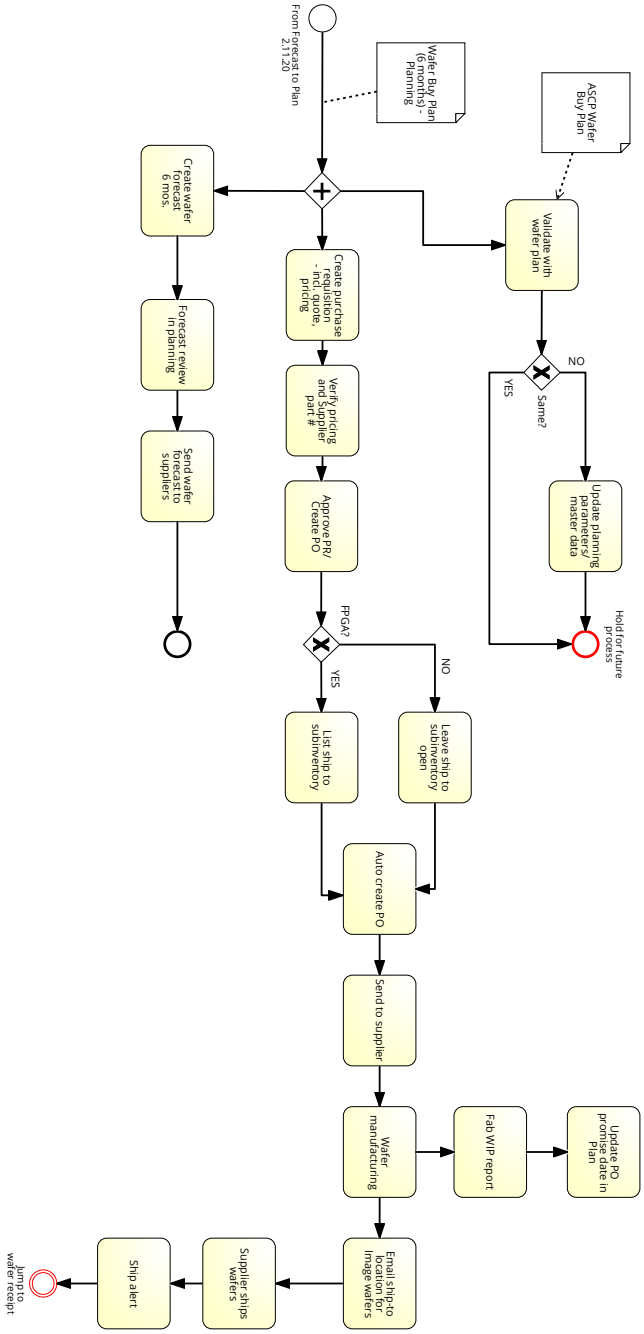

21.2 Description

Team Approved

21.3 Elements

Process elements

From Forecast to Plan 2.11.20

Start Event

Data objects: Wafer Buy Plan (6 months) - Planning

Parallel Gateway

Parallel Gateway

Data objects: Wafer Buy Plan (6 months) - Planning

Validate with wafer plan

Task

Data objects: ASCP Wafer Buy Plan

Same?

Data-based Exclusive (XOR) Gateway

Update planning parameters/ master data

Task

Hold for future process

End Event

Create purchase requisition - incl. quote, pricing

Task

Verify pricing and Supplier part #

Task

Approve PR/ Create PO

Task

FPGA?

Data-based Exclusive (XOR) Gateway

Leave ship to subinventory open

Task

List ship to subinventory

Task

Auto create PO

Task

Send to supplier

Task

Wafer manufacturing

Task

Fab WIP report

Task

Update PO promise date in Plan

Task

Email ship-to location for Image wafers

Task

Supplier ships wafers

Task

Ship alert

Task

Jump to wafer receipt

Intermediate Event

Create wafer forecast 6 mos.

Task

Forecast review in planning

Task

Send wafer forecast to suppliers

Task

End Event

End Event

Data / IT-Systems

ASCP Wafer Buy Plan

Data Object

Wafer Buy Plan (6 months) - Planning

Data Object

22 2.11.70 build plan for subcons

Diagram Type	Business Process Diagram (BPMN 2.0)
Path	Shared documents / Sub-Processes (L2) / Level 3 sub-processes
Author	Amber Barber
Revision Number	4
Last modified	May 20, 2016
Diagram Link	https://editor.signavio.com/p/editor?id=936a114474e542f5b3878e496c213a31

22.1 Diagram

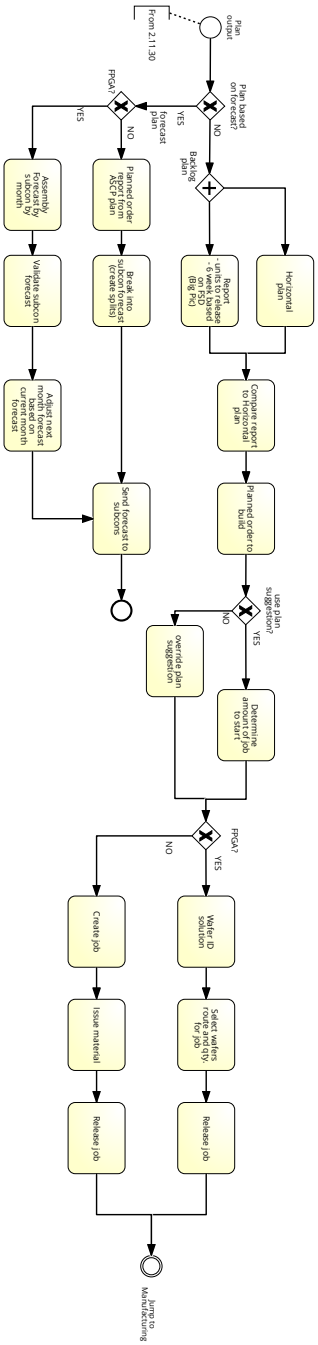

22.2 Description

Team Approved

22.3 Elements

Process elements

Plan output

Start Event

Plan based on forecast?

Data-based Exclusive (XOR) Gateway

Backlog plan

Parallel Gateway

Horizontal plan

Task

Report - units to release - 6 week based on FSD (Big Pic)

Task

Compare report to Horizontal plan

Task

Planned order to build

Task

use plan suggestion?

Data-based Exclusive (XOR) Gateway

Determine amount of job to start

Task

override plan suggestion

Task

FPGA?

Data-based Exclusive (XOR) Gateway

Create job

Task

Issue material

Task

Release job

Task

Wafer ID solution

Task

Select wafers route and qty. for job

Task

Release job

Task

Jump to Manufacturing

Intermediate Event

FPGA?

Data-based Exclusive (XOR) Gateway

Planned order report from ASCP plan

Task

Break into subcon forecast (create splits)

Task

Assembly Forecast by subcon by month

Task

Validate subcon forecast

Task

Adjust next month forecast based on current month forecast

Task

Send forecast to subcons

Task

End Event

End Event

23 2.14.10/30 Pre-assembly wafer processing - sort - bump

Diagram Type	Business Process Diagram (BPMN 2.0)
Path	Shared documents / Sub-Processes (L2) / Level 3 sub-processes
Author	Amber Barber
Revision Number	4
Last modified	Jun 2, 2016
Diagram Link	https://editor.signavio.com/p/editor?id=fd134a902c724a50963f8ba790e85a96

23.1 Diagram

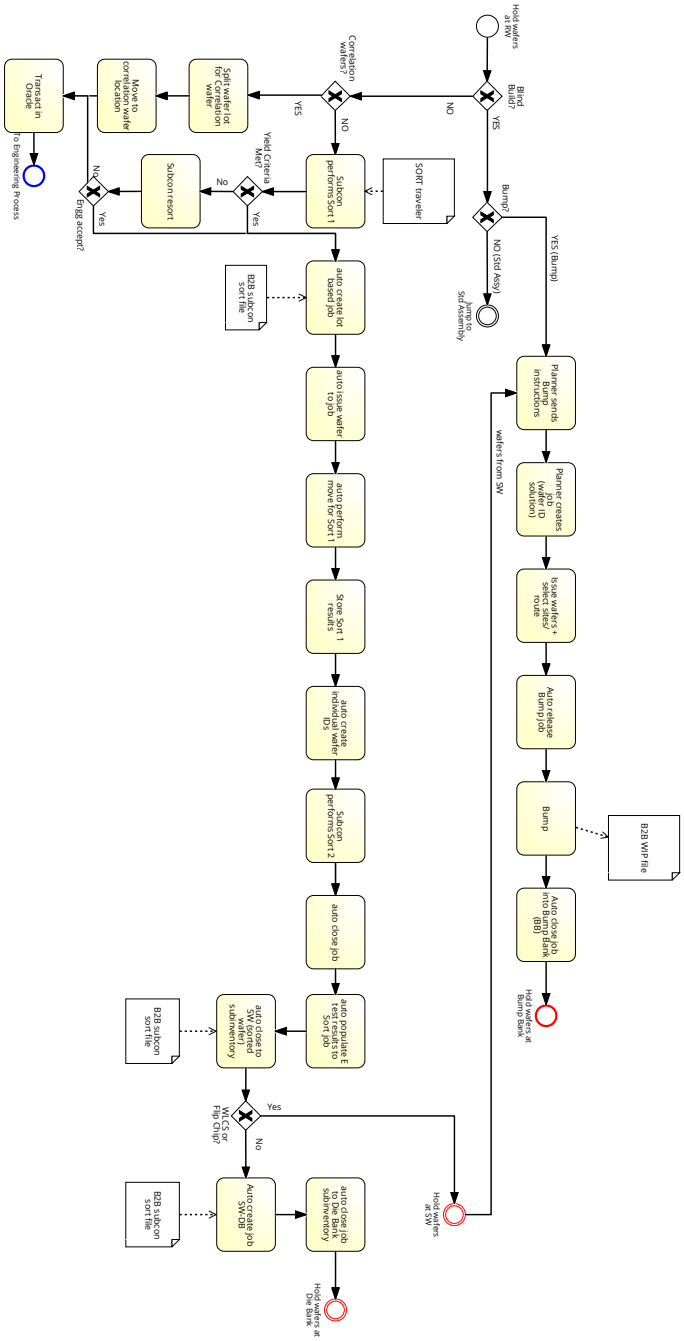

23.2 Description

Team Approved
SORT and BUMP processes

23.3 Elements

Process elements

Hold wafers at RW

Start Event

Blind Build?

Data-based Exclusive (XOR) Gateway

Bump?

Data-based Exclusive (XOR) Gateway

Jump to Std Assembly

Intermediate Event

Correlation wafers?

Data-based Exclusive (XOR) Gateway

Subcon performs Sort 1

Task

Data objects: SORT traveler

Yield Criteria Met?

Data-based Exclusive (XOR) Gateway

Subcon resort

Task

Engg accept?

Data-based Exclusive (XOR) Gateway

auto create lot based job

Task

Data objects: B2B subcon sort file

auto issue wafer to job

Task

auto perform move for Sort 1

Task

Store Sort 1 results

Task

auto create individual wafer IDs

Task

Subcon performs Sort 2

Task

auto close job

Task

auto populate E test results to Sort job

Task

auto close to SW (sorted wafer) subinventory

Task

Data objects: B2B subcon sort file

WLCS or Flip Chip?

Data-based Exclusive (XOR) Gateway

Hold wafers at SW

Intermediate Event

Planner sends Bump instructions

Task

Planner creates job (wafer ID solution)

Task

Issue wafers + select sites/ route

Task

Auto release Bump job

Task

Bump

Task

Data objects: B2B WIP file

Auto close job into Bump Bank (BB)

Task

Hold wafers at Bump Bank

End Event

Auto create job SW-DB

Task

Data objects: B2B subcon sort file

auto close job to Die Bank subinventory

Task

Hold wafers at Die Bank

Intermediate Event

Split wafer lot for Correlation wafer

Task

Move to correlation wafer location

Task

Transact in Oracle

Task

To Engineering Process

End Event

Data / IT-Systems

B2B subcon sort file

Data Object

B2B subcon sort file

Data Object

B2B subcon sort file

Data Object

B2B WIP file

Data Object

SORT traveler

Data Object

24 2.14.40 Assembly - WLCS and FlipChip

Diagram Type	Business Process Diagram (BPMN 2.0)
Path	Shared documents / Sub-Processes (L2) / Level 3 sub-processes
Author	Amber Barber
Revision Number	4
Last modified	Jun 2, 2016
Diagram Link	https://editor.signavio.com/p/editor?id=c105c20a17344462882d0c46d77b9b45

24.1 Diagram

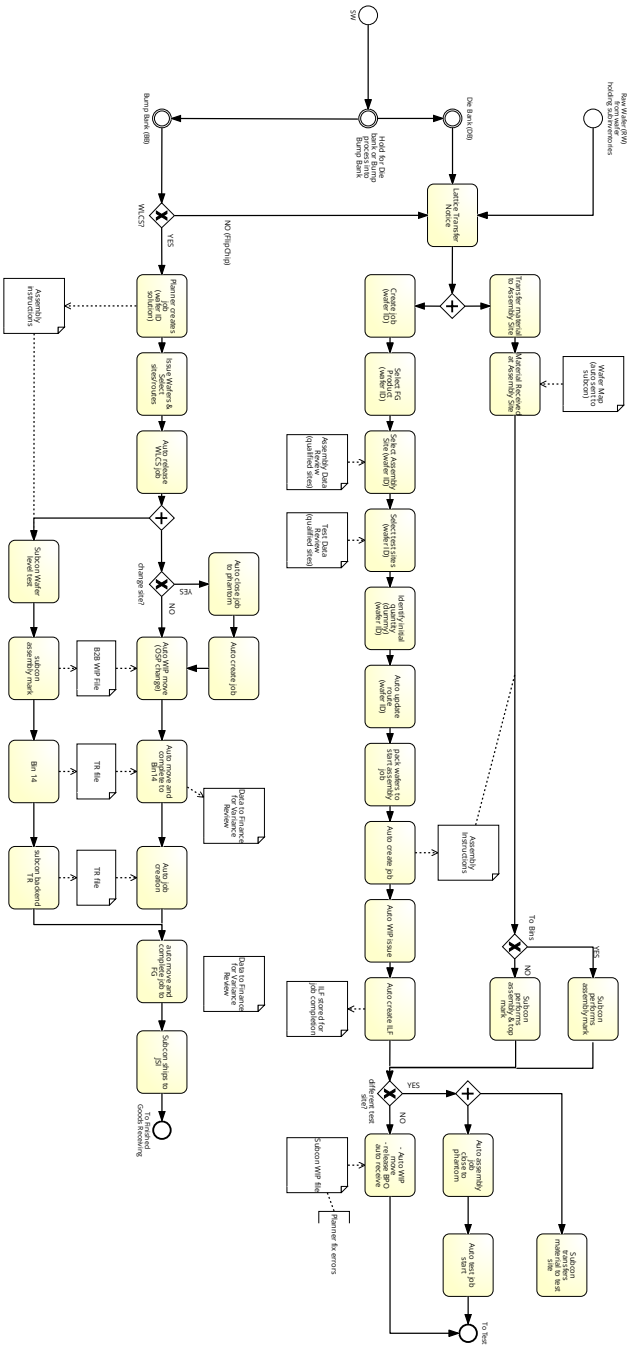

24.2 Description

Team Approved

24.3 Elements

Process elements

SW

Start Event

Intermediate Event

Intermediate Event

Die Bank (DB)

Intermediate Event

Raw Wafer (RW) from wafer holding subinventories

Start Event

Bump Bank (BB)

Intermediate Event

WLCS?

Data-based Exclusive (XOR) Gateway

Lattice Transfer Notice

Task

Parallel Gateway

Parallel Gateway

Transfer material to Assembly Site

Task

Material Received at Assembly Site

Task

Data objects:

- Wafer Map (auto sent to subcon)
- Assembly Instructions

To Bins

Data-based Exclusive (XOR) Gateway

Data objects: Assembly Instructions

Subcon performs assembly mark

Task

Subcon performs assembly & top mark

Task

Create job (wafer ID)

Task

Select FG Product (wafer ID)

Task

Select Assembly Site (wafer ID)

Task

Data objects: Assembly Data Review (qualified sites)

Select test sites (wafer ID)

Task

Data objects: Test Data Review (qualified sites)

Identify initial quantity (dummy) (wafer ID)

Task

Auto update route (wafer ID)

Task

pack wafers to start assembly job

Task

Auto create job

Task

Data objects: Assembly Instructions

Auto WIP issue

Task

Auto create ILF

Task

Data objects: ILF stored for job completion

different test site?

Data-based Exclusive (XOR) Gateway

Parallel Gateway

Parallel Gateway

Subcon transfers material to test site

Task

Auto assembly job close to phantom

Task

Auto test job start

Task

- Auto WIP move - release BPO auto receive

Task

Data objects: Subcon WIP file

To Test

End Event

Planner creates job (wafer ID solution)

Task

Data objects: Assembly instructions

Issue Wafers & Select sites/routes

Task

Auto release WLCS job

Task

Parallel Gateway

Parallel Gateway

change site?

Data-based Exclusive (XOR) Gateway

Auto close job to phantom

Task

Auto create job

Task

Auto WIP move (OSP change)

Task

Data objects: B2B WIP File

Auto move and complete to Bin14

Task

Data objects:

TR file

Data to Finance for Variance Review

Auto job creation

Task

Data objects: TR file

Subcon Wafer level test

Task

Data objects: Assembly instructions

subcon assembly mark

Task

Data objects: B2B WIP File

Bin 14

Task

Data objects: TR file

subcon backend TR

Task

Data objects: TR file

auto move and complete job to FG

Task

Subcon ships to JSI

Task

To Finished Goods Receiving

End Event

Data / IT-Systems

Assembly Data Review (qualified sites)

Data Object

Assembly Instructions

Data Object

Assembly instructions

Data Object

B2B WIP File

Data Object

Data to Finance for Variance Review

Data Object

Data to Finance for Variance Review

Data Object

ILF stored for job completion

Data Object

Subcon WIP file

Data Object

Test Data Review (qualified sites)

Data Object

TR file

Data Object

TR file

Data Object

Wafer Map (auto sent to subcon)

Data Object

25 2.14.40 Manufacturing Test Process

Diagram Type	Business Process Diagram (BPMN 2.0)
Path	Shared documents / Sub-Processes (L2) / Level 3 sub-processes
Author	Amber Barber
Revision Number	3
Last modified	Jun 2, 2016
Diagram Link	https://editor.signavio.com/p/editor?id=ac48bb346ab345ac9335ae49ca20a337

25.1 Diagram

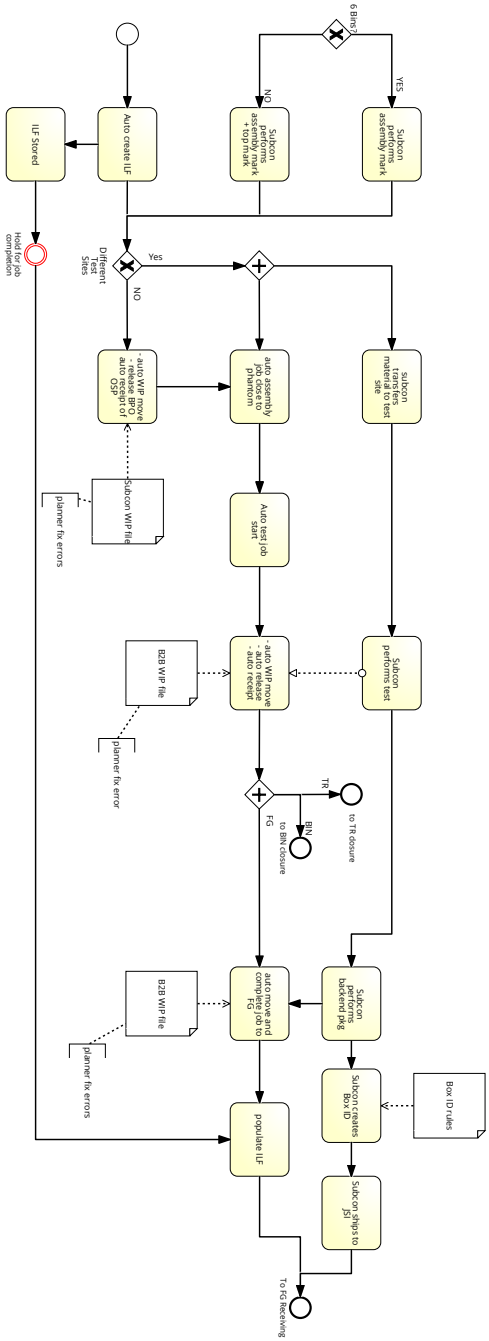

25.2 Description

Team Approved

25.3 Elements

Process elements

6 Bins?

Data-based Exclusive (XOR) Gateway

Subcon performs assembly mark

Task

Subcon performs assembly mark + top mark

Task

Start Event

Start Event

Auto create ILF

Task

Different Test Sites

Data-based Exclusive (XOR) Gateway

- auto WIP move - release BPO auto receipt of OSP

Task

Data objects: Subcon WIP file

Parallel Gateway

Parallel Gateway

subcon transfers material to test site

Task

Subcon performs test

Task

Subcon performs backend pkg

Task

Subcon creates Box ID

Task

Data objects: Box ID rules

Subcon ships to JSI

Task

auto assembly job close to phantom

Task

Auto test job start

Task

- auto WIP move - auto release - auto receipt

Task

Data objects: B2B WIP file

Parallel Gateway

Parallel Gateway

to TR closure

End Event

to BIN closure

End Event

auto move and complete job to FG

Task

Data objects: B2B WIP file

ILF Stored

Task

Hold for job completion

Intermediate Event

populate ILF

Task

To FG Receiving

End Event

Data / IT-Systems

B2B WIP file

Data Object

B2B WIP file

Data Object

Box ID rules

Data Object

Subcon WIP file

Data Object

26 2.14.40.70 Silicon non-standard mfg jobs

Diagram Type	Business Process Diagram (BPMN 2.0)
Path	Shared documents / Sub-Processes (L2) / Level 3 sub-processes
Author	Amber Barber
Revision Number	7
Last modified	Apr 19, 2016
Diagram Link	https://editor.signavio.com/p/editor?id=6285d03f8cf2464b994ff7bc6a4cc47e

26.1 Diagram

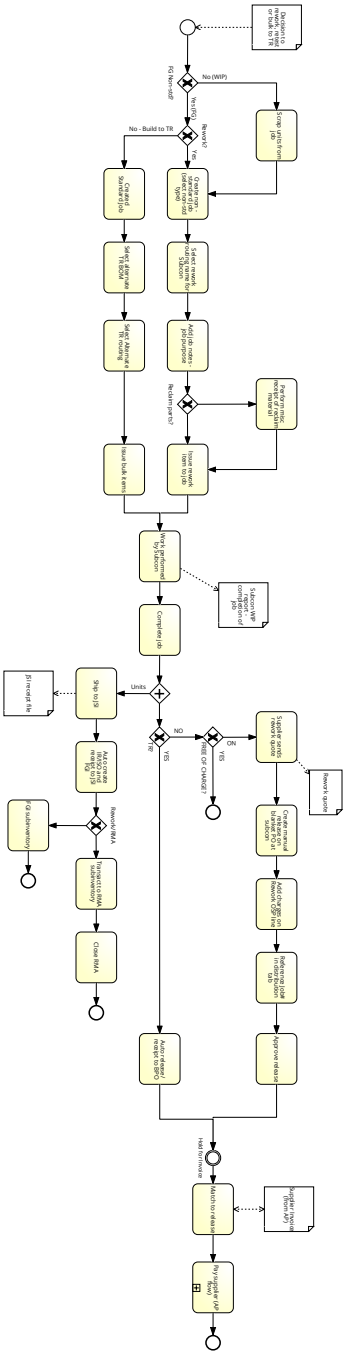

26.2 Description

Team Approved

26.3 Elements

Process elements

Start Event

Start Event

Data objects: Decision to rework, retest or bulk to TR

FG Non-std?

Data-based Exclusive (XOR) Gateway

Scrap units from job

Task

Rework?

Data-based Exclusive (XOR) Gateway

Create non - standard job (select non-std type)

Task

Select rework routing name for Subcon

Task

Add job notes - job purpose

Task

Reclaim parts?

Data-based Exclusive (XOR) Gateway

Perform misc receipt of reclaim material

Task

Issue rework item to job

Task

Created Standard Job

Task

Select alternate TR BOM

Task

Select Alternate TR routing

Task

Issue bulk items

Task

Work performed by Subcon

Task

Data objects: Subcon WIP report - completion of job

Complete job

Task

Parallel Gateway

Parallel Gateway

TR?

Data-based Exclusive (XOR) Gateway

FREE OF CHARGE?

Data-based Exclusive (XOR) Gateway

Supplier sends rework quote

Task

Data objects: Rework quote

Create manual release on blanket PO at subcon

Task

Add charges on Rework OSP line

Task

Reference Job# in distribution tab

Task

Approve release

Task

End Event

End Event

Auto release/ receipt to BPO

Task

Hold for Invoice

Intermediate Event

Match to release

Task

Data objects: Supplier Invoice (from AP)

Pay supplier (AP flow)

Collapsed Subprocess

End Event

End Event

Ship to JSI

Task

Data objects: JSI receipt file

Auto create IR/ISO and receipt to JSI FGI

Task

Rework/RMA

Data-based Exclusive (XOR) Gateway

Transact to RMA subinventory

Task

Close RMA

Task

End Event

End Event

FGI subinventory

Task

End Event

End Event

Data / IT-Systems

Decision to rework, retest or bulk to TR

Data Object

JSI receipt file

Data Object

Rework quote

Data Object

Subcon WIP report - completion of job

Data Object

Supplier Invoice (from AP)

Data Object

27 2.14.50 Bin and Tape and Reel lots to FG

Diagram Type	Business Process Diagram (BPMN 2.0)
Path	Shared documents / Sub-Processes (L2) / Level 3 sub-processes
Author	Amber Barber
Revision Number	3
Last modified	Jun 2, 2016
Diagram Link	https://editor.signavio.com/p/editor?id=99cd08b84c3749feab2b9bb2fce0bd63

27.1 Diagram

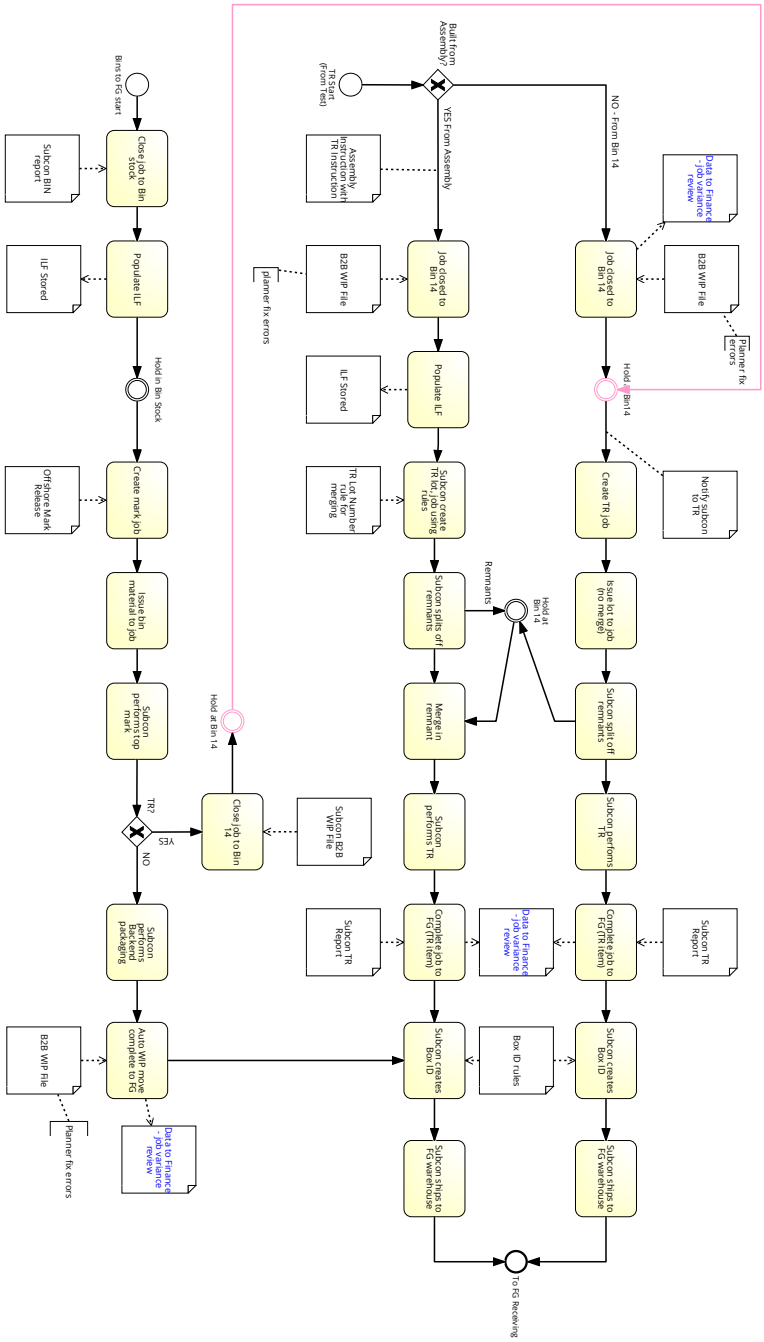

27.2 Description

Team Approved

27.3 Elements

Process elements

TR Start (From Test)

Start Event

Built from Assembly?

Data-based Exclusive (XOR) Gateway

Data objects: Assembly Instruction with TR Instruction

Job closed to Bin 14

Task

Data objects:

B2B WIP File

Data to Finance - job variance review

Job closed to Bin 14

Task

Data objects:

B2B WIP File

Assembly Instruction with TR Instruction

Populate ILF

Task

Data objects: ILF Stored

Subcon create TR lot, job using rules

Task

Data objects: TR Lot Number rule for merging

Subcon splits off remnants

Task

Bins to FG start

Start Event

Close job to Bin stock

Task

Data objects: Subcon BIN report

Populate ILF

Task

Data objects: ILF Stored

Hold in Bin Stock

Intermediate Event

Create mark job

Task

Data objects: Offshore Mark Release

Issue bin material to job

Task

Subcon performs top mark

Task

TR?

Data-based Exclusive (XOR) Gateway

Close job to Bin 14

Task

Data objects: Subcon B2B WIP File

Hold at Bin 14

Intermediate Event

Hold at Bin14

Intermediate Event

Data objects: Notify subcon to TR

Create TR job

Task

Data objects: Notify subcon to TR

Issue lot to job (no merge)

Task

Subcon split off remnants

Task

Subcon perfoms TR

Task

Complete job to FG (TR item)

Task

Data objects:

- Subcon TR Report
- Data to Finance - job variance review

Subcon creates Box ID

Task

Data objects: Box ID rules

Subcon ships to FG warehouse

Task

Hold at Bin 14

Intermediate Event

Merge in remnant

Task

Subcon performs TR

Task

Complete job to FG (TR item)

Task

Data objects:

Subcon TR Report

Data to Finance - job variance review

Subcon performs Backend packaging

Task

Auto WIP move complete to FG

Task

Data objects:

B2B WIP File

Data to Finance - job variance review

Subcon creates Box ID

Task

Data objects: Box ID rules

Subcon ships to FG warehouse

Task

To FG Receiving

End Event

Data / IT-Systems

Assembly Instruction with TR Instruction

Data Object

B2B WIP File

Data Object

B2B WIP File

Data Object

B2B WIP File

Data Object

Box ID rules

Data Object

Data to Finance - job variance review

Data Object

Data to Finance - job variance review

Data Object

Data to Finance - job variance review

Data Object

ILF Stored

Data Object

ILF Stored

Data Object

Notify subcon to TR

Data Object

Offshore Mark Release

Data Object

Subcon B2B WIP File

Data Object

Subcon BIN report

Data Object

Subcon TR Report

Data Object

Subcon TR Report

Data Object

TR Lot Number rule for merging

Data Object

28 2.14.xx Manufacturing Process for Image Products

Diagram Type	Business Process Diagram (BPMN 2.0)
Path	Shared documents / Sub-Processes (L2) / Level 3 sub-processes
Author	Amber Barber
Revision Number	2
Last modified	Apr 26, 2016
Diagram Link	https://editor.signavio.com/p/editor?id=31c5797844944b7cab1301ea913a59da

28.1 Diagram

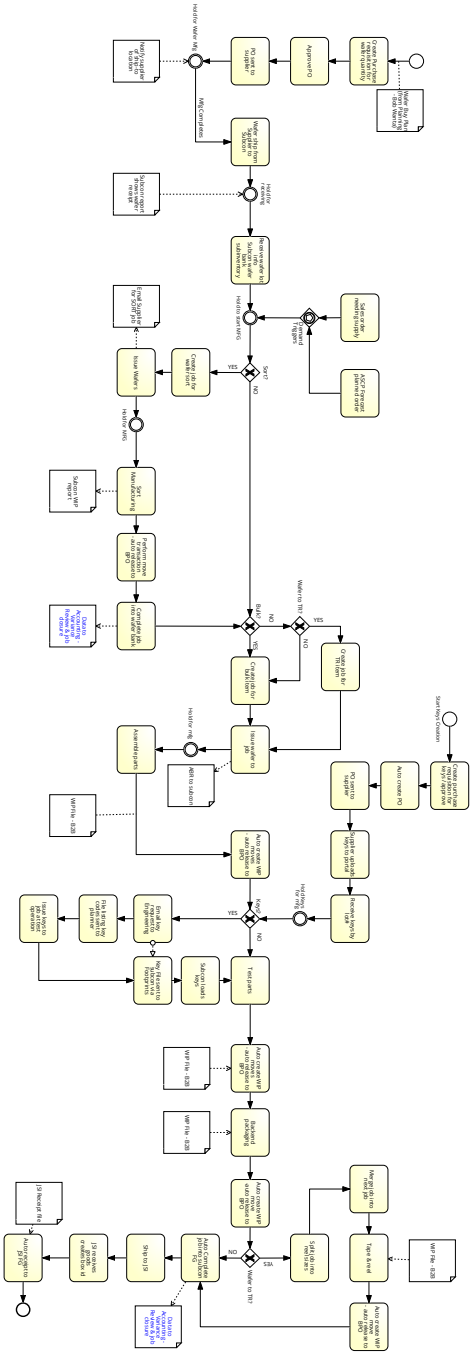

28.2 Description

Team Approved

28.3 Elements

Process elements

Start Event

Start Event

Data objects: Wafer Buy Plan (from Planning - Bob Wanta)

Create Purchase requisition for wafer quantity

Task

Data objects: Wafer Buy Plan (from Planning - Bob Wanta)

Approve PO

Task

PO sent to supplier

Task

Hold for Wafer Mfg

Intermediate Event

Data objects: Notify supplier of ship-to location

Wafer ship from Supplier to Subcon

Task

Hold for receiving

Intermediate Event

Data objects: Subcon report shows wafer receipt

Receive wafer lot info Subcon wafer bank subinventory

Task

Sales order needing supply

Task

ASCP Forecast planned order

Task

Demand Triggers

Event-based Gateway

Hold to start MFG

Intermediate Event

Sort?

Data-based Exclusive (XOR) Gateway

Create job for wafer sort

Task

Issue Wafers

Task

Data objects: Email Supplier for SORT job

Hold for MFG

Intermediate Event

Sort Manufacturing

Task

Data objects: Subcon WIP report

Perform move transaction - auto release to BPO

Task

Complete job into wafer bank

Task

Data objects: Data to Accounting - Variance Review & job closure

Bulk?

Data-based Exclusive (XOR) Gateway

Wafer to TR?

Data-based Exclusive (XOR) Gateway

Create job for TR item

Task

Create job for bulk item

Task

Issue wafer to job

Task

Data objects: ABR to subcon

Hold for mfg

Intermediate Event

Assemble parts

Task

Data objects: WIP File - B2B

Auto create WIP moves - auto release to BPO

Task

Data objects: WIP File - B2B

Start Keys Creation

Start Event

Create purchase requisition for keys / approve

Task

Auto create PO

Task

PO sent to supplier

Task

Supplier uploads keys to portal

Task

Receive keys by lot#

Task

Email key request to Engineering

Task

File listing key codes sent to planner

Task

Issue keys to job at test operation

Task

Keys?

Data-based Exclusive (XOR) Gateway

Hold Keys for mfg

Intermediate Event

Test parts

Task

Subcon loads keys

Task

Key File sent to subcon via Footprints

Task

Auto create WIP moves - auto release to BPO

Task

Data objects: WIP File - B2B

Backend packaging

Task

Data objects: WIP File - B2B

Merge job into next job

Task

Auto create WIP move -auto release to BPO

Task

Tape & reel

Task

Data objects: WIP File - B2B

Split job into reel sizes

Task

Auto Complete job into subcon FG

Task

Data objects: Data to Accounting - Variance Review & job closure

Ship to JSI

Task

JSI receives goods creates box id

Task

Auto receipt to JSI FG

Task

Data objects: JSI Receipt file

Wafer to TR?

Data-based Exclusive (XOR) Gateway

Auto create WIP move - auto release to BPO

Task

End Event

End Event

Data / IT-Systems

ABR to subcon

Data Object

Data to Accounting - Variance Review & job closure

Data Object

Data to Accounting - Variance Review & job closure

Data Object

Email Supplier for SORT job

Data Object

JSI Receipt file

Data Object

Notify supplier of ship-to location

Data Object

Subcon report shows wafer receipt

Data Object

Subcon WIP report

Data Object

Wafer Buy Plan (from Planning - Bob Wanta)

Data Object

WIP File - B2B

Data Object

WIP File - B2B

Data Object

WIP File - B2B

Data Object

WIP File - B2B

Data Object

29 2.22.00 Item Costing and Standards

Diagram Type	Business Process Diagram (BPMN 2.0)
Path	Shared documents / Sub-Processes (L2) / Level 3 sub-processes
Author	Amber Barber
Revision Number	3
Last modified	Apr 1, 2016
Diagram Link	https://editor.signavio.com/p/editor?id=90ee8496869847f688158db05ef57813

29.1 Diagram

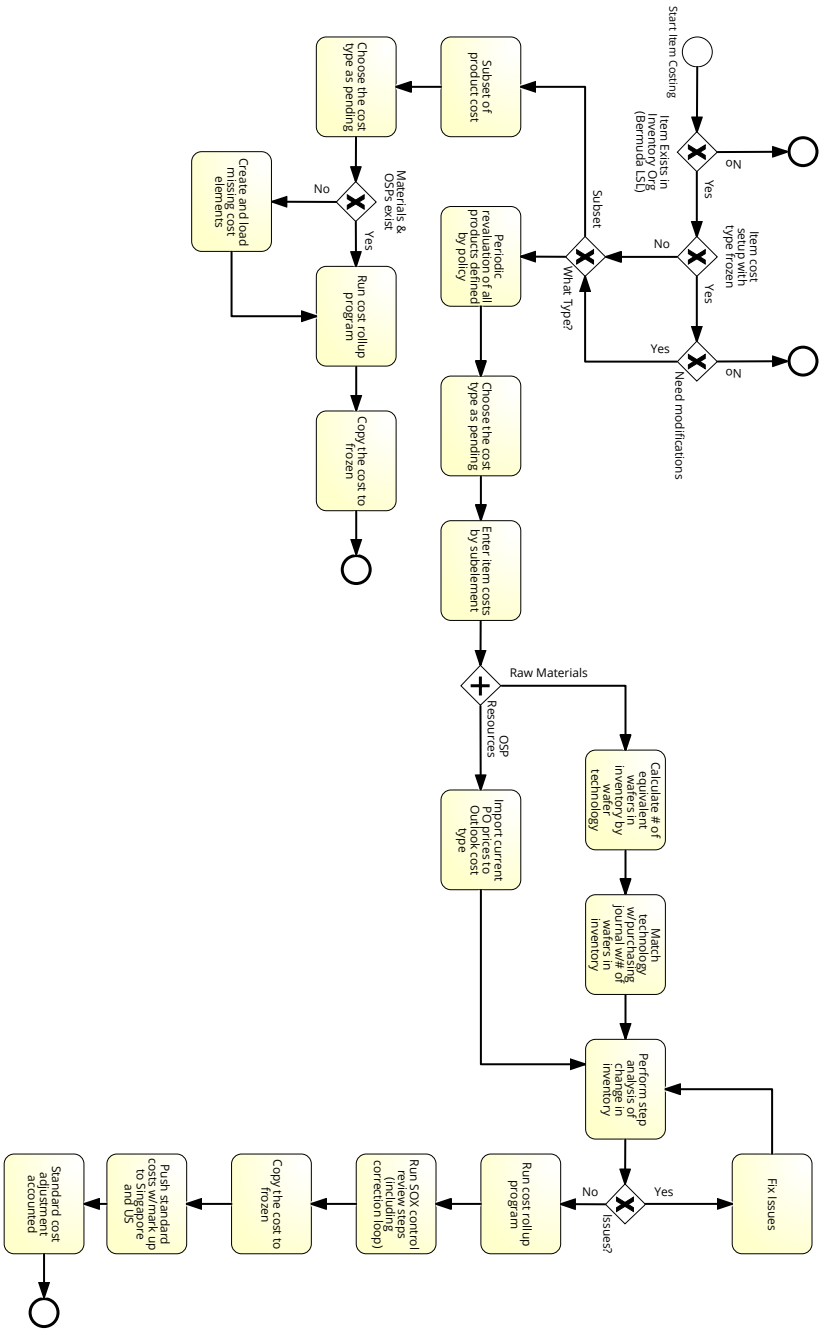

29.2 Description

Team Approved

29.3 Elements

Process elements

Start Item Costing

Start Event

Item Exists in Inventory Org (Bermuda LSL)

Data-based Exclusive (XOR) Gateway

End Event

End Event

Item cost setup with type frozen

Data-based Exclusive (XOR) Gateway

Need modifications

Data-based Exclusive (XOR) Gateway

End Event

End Event

What Type?

Data-based Exclusive (XOR) Gateway

Periodic revaluation of all products defined by policy

Task

Choose the cost type as pending

Task

Enter item costs by subelement

Task

Parallel Gateway

Parallel Gateway

Calculate # of equivalent wafers in inventory by wafer technology

Task

Match technology w/purchasing journal w/# of wafers in inventory

Task

Import current PO prices to Outlook cost type

Task

Perform step analysis of change in inventory

Task

Issues?

Data-based Exclusive (XOR) Gateway

Fix Issues

Task

Run cost rollup program

Task

Run SOX control review steps (including correction loop)

Task

Copy the cost to frozen

Task

Push standard costs w/mark up to Singapore and US

Task

Standard cost adjustment accounted

Task

End Event

End Event

Subset of product cost

Task

Choose the cost type as pending

Task

Materials & OSPs exist

Data-based Exclusive (XOR) Gateway

Create and load missing cost elements

Task

Run cost rollup program

Task

Copy the cost to frozen

Task

End Event

End Event

30 2.22.00 Quarterly Standard Cost Roll Process

Diagram Type	Business Process Diagram (BPMN 2.0)
Path	Shared documents / Sub-Processes (L2) / Level 3 sub-processes
Author	Amber Barber
Revision Number	2
Last modified	Apr 27, 2016
Diagram Link	https://editor.signavio.com/p/editor?id=e0089e7165b349588ad0b32c048dd7e4

30.1 Diagram

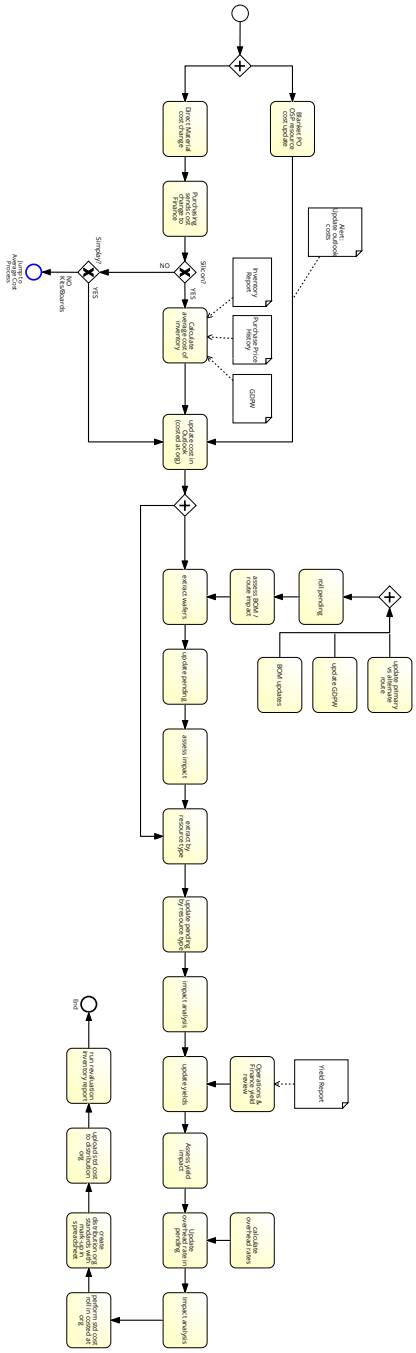

30.2 Description

Team Approved

30.3 Elements

Process elements

Start Event

Start Event

Parallel Gateway

Parallel Gateway

Blanket PO OSP resource cost update

Task

Data objects: Alert: Update outlook costs

Direct Material cost change

Task

Purchasing sends cost change to Finance

Task

Silicon?

Data-based Exclusive (XOR) Gateway

Calculate average cost of inventory

Task

Data objects:

- GDPW
- Purchase Price History
- Inventory Report

Simplay?

Data-based Exclusive (XOR) Gateway

update cost in Outlook (costed at org)

Task

Data objects: Alert: Update outlook costs

Parallel Gateway

Parallel Gateway

Jump to Average Cost Process

End Event

update primary vs alternate route

Task

update GDPW

Task

BOM updates

Task

Parallel Gateway

Parallel Gateway

roll pending

Task

assess BOM / route impact

Task

extract wafers

Task

update pending

Task

assess impact

Task

extract by resource type

Task

update pending by resource type

Task

impact analysis

Task

Operations & Finance yield review

Task

Data objects: Yield Report

update yields

Task

Assess yield impact

Task

calculate overhead rates

Task

Update overhead rate in pending

Task

Impact analysis

Task

perform std cost roll in costed at org

Task

create distribution org standards with mark-up in spreadsheet

Task

upload std cost to distribution org

Task

run revaluation inventory report

Task

End

End Event

Data / IT-Systems

Alert: Update outlook costs

Data Object

GDPW

Data Object

Inventory Report

Data Object

Purchase Price History

Data Object

Yield Report

Data Object

31 3.2.00 Finished Goods Receiving

Diagram Type	Business Process Diagram (BPMN 2.0)
Path	Shared documents / Sub-Processes (L2) / Level 3 sub-processes
Author	Amber Barber
Revision Number	3
Last modified	Jun 1, 2016
Diagram Link	https://editor.signavio.com/p/editor?id=b6e4bee4631e4641b49b20fc55f9e808

31.1 Diagram

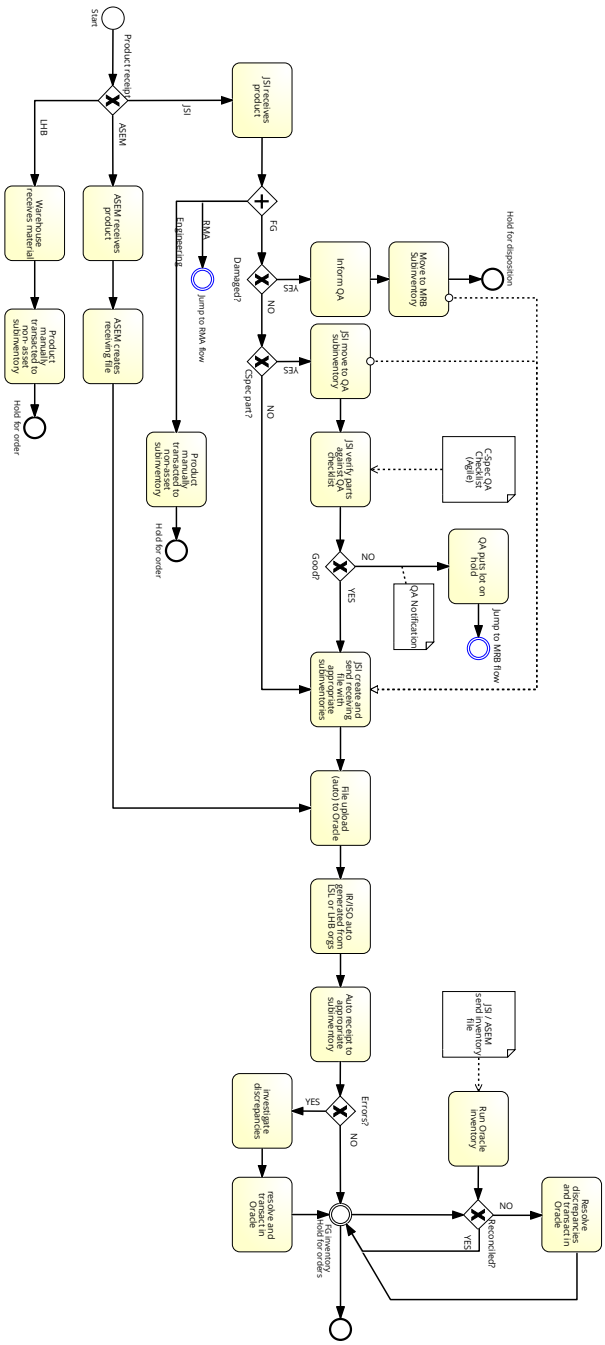

31.2 Description

Team Approved
Receiving of finished goods from subcontractors to warehouses - either JSI, LHB, or ASEM (for drop-ship)

31.3 Elements

Process elements

Start

Start Event

Product receipt

Data-based Exclusive (XOR) Gateway

JSI receives product

Task

FG

Parallel Gateway

Damaged?

Data-based Exclusive (XOR) Gateway

Inform QA

Task

Move to MRB Subinventory

Task

Hold for disposition

End Event

CSpec part?

Data-based Exclusive (XOR) Gateway

JSI move to QA subinventory

Task

JSI verify parts against QA checklist

Task

Data objects: C-Spec QA Checklist (Agile)

Good?

Data-based Exclusive (XOR) Gateway

Data objects: QA Notification

QA puts lot on hold

Task

Data objects: QA Notification

Intermediate Event

Intermediate Event

JSI create and send receiving file with appropriate subinventories

Task

Jump to RMA flow

Intermediate Event

Product manually transacted to non-asset subinventory

Task

Hold for order

End Event

ASEM receives product

Task

ASEM creates receiving file

Task

File upload (auto) to Oracle

Task

IR/ISO auto generated from LSL or LHB orgs

Task

Auto receipt to appropriate subinventory

Task

Errors?

Data-based Exclusive (XOR) Gateway

investigate discrepancies

Task

resolve and transact in Oracle

Task

FG inventory Hold for orders

Intermediate Event

End Event

End Event

Warehouse receives material

Task

Product manually transacted to non- asset subinventory

Task

Hold for order

End Event

Run Oracle inventory

Task

Data objects: JSI / ASEM send inventory file

Reconciled?

Data-based Exclusive (XOR) Gateway

Resolve discrepancies and transact in Oracle

Task

Data / IT-Systems

C-Spec QA Checklist (Agile)

Data Object

JSI / ASEM send inventory file

Data Object

QA Notification

Data Object

32 3.2.00 PO receipt - wafer

Diagram Type	Business Process Diagram (BPMN 2.0)
Path	Shared documents / Sub-Processes (L2) / Level 3 sub-processes
Author	Amber Barber
Revision Number	4
Last modified	Jun 1, 2016
Diagram Link	https://editor.signavio.com/p/editor?id=6b8dc4f2515346abb262a84d7b3a29d7

32.1 Diagram

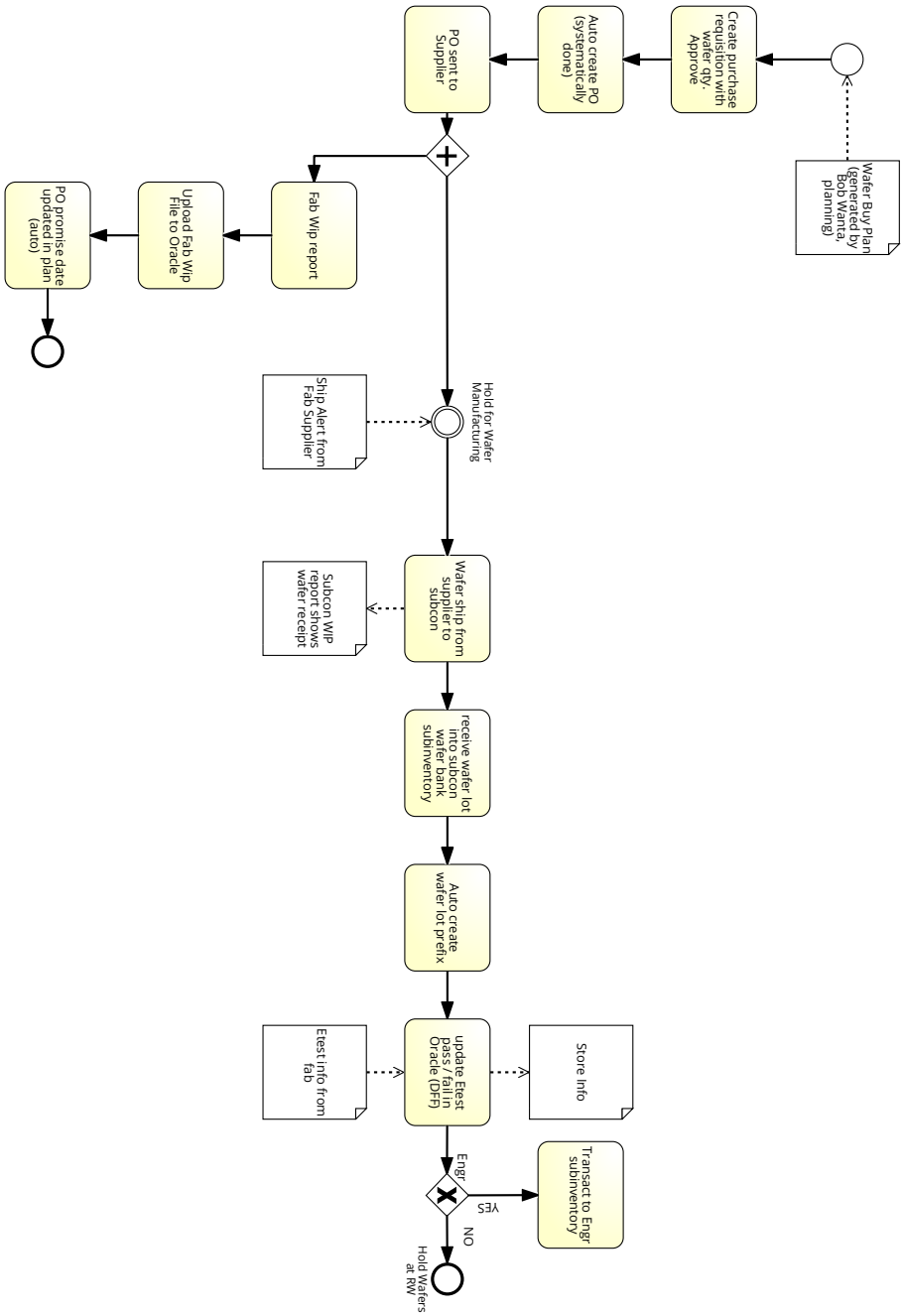

32.2 Description

Team Approved
Purchasing Order receiving for wafers

32.3 Elements

Process elements

Start Event

Start Event

Data objects: Wafer Buy Plan (generated by Bob Wanta, planning)

Create purchase requisition with wafer qty. Approve

Task

Auto create PO (systematically done)

Task

PO sent to Supplier

Task

Parallel Gateway

Parallel Gateway

Hold for Wafer Manufacturing

Intermediate Event

Data objects: Ship Alert from Fab Supplier

Wafer ship from supplier to subcon

Task

Data objects: Subcon WIP report shows wafer receipt

receive wafer lot into subcon wafer bank subinventory

Task

Auto create wafer lot prefix

Task

update Etest pass / fail in Oracle (DFF)

Task

Data objects:

- Etest info from fab
- Store Info

Engr

Data-based Exclusive (XOR) Gateway

Transact to Engr subinventory

Task

Hold Wafers at RW

End Event

Fab Wip report

Task

Upload Fab Wip File to Oracle

Task

PO promise date updated in plan (auto)

Task

End Event

End Event

Data / IT-Systems

Etest info from fab

Data Object

Ship Alert from Fab Supplier

Data Object

Store Info

Data Object

Subcon WIP report shows wafer receipt

Data Object

Wafer Buy Plan (generated by Bob Wanta, planning)

Data Object

33 3.2.10 Wafer RMA request and resolution

Diagram Type	Business Process Diagram (BPMN 2.0)
Path	Shared documents / Sub-Processes (L2) / Level 3 sub-processes
Author	Amber Barber
Revision Number	4
Last modified	May 26, 2016
Diagram Link	https://editor.signavio.com/p/editor?id=4dcacfffbb7d4bcebb8876ec83fb96fb

33.1 Diagram

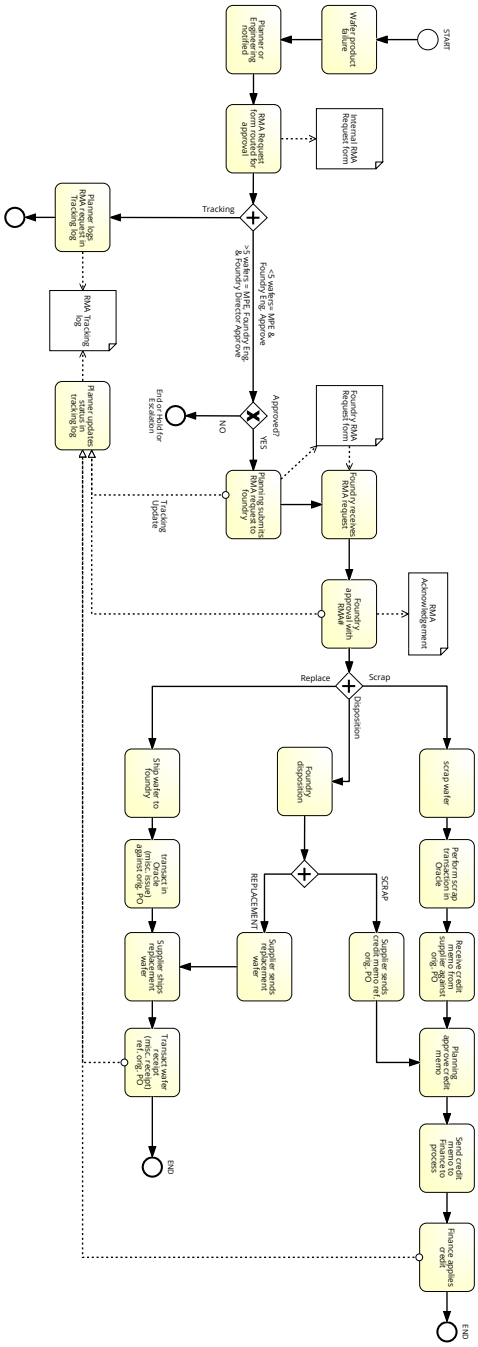

33.2 Description

Team Approved
Wafer RMA request and resolution process, for wafers from our foundry that do not meet Lattice requirements

33.3 Elements

Process elements

START

Start Event

Wafer product failure

Task

Planner or Engineering notified

Task

RMA Request form routed for approval

Task

Data objects: Internal RMA Request form

Parallel Gateway

Parallel Gateway

Approved?

Data-based Exclusive (XOR) Gateway

Planning submits RMA request to foundry

Task

Data objects: Foundry RMA Request form

Foundry receives RMA request

Task

Data objects: Foundry RMA Request form

Foundry approval with RMA#

Task

Data objects: RMA Acknowledgement

Disposition

Parallel Gateway

Ship wafer to foundry

Task

transact in Oracle (misc. issue) against orig. PO

Task

scrap wafer

Task

Perform scrap transaction in Oracle

Task

Receive credit memo from supplier against orig. PO

Task

Foundry disposition

Task

Parallel Gateway

Parallel Gateway

Supplier sends credit memo ref. orig. PO

Task

Planning approve credit memo

Task

Send credit memo to Finance to process

Task

Finance applies credit

Task

END

End Event

Supplier sends replacement wafer

Task

Supplier ships replacement wafer

Task

Transact wafer receipt (misc. receipt) ref. orig. PO

Task

END

End Event

End or Hold for Escalation

End Event

Planner logs RMA request in Tracking log

Task

Data objects: RMA Tracking log

End Event

End Event

Planner updates status in tracking log

Task

Data objects: RMA Tracking log

Data / IT-Systems

Foundry RMA Request form

Data Object

Internal RMA Request form

Data Object

RMA Acknowledgement

Data Object

RMA Tracking log

Data Object

34 3.3.20 Purchase Order Change Order Process

Diagram Type	Business Process Diagram (BPMN 2.0)
Path	Shared documents / Sub-Processes (L2) / Level 3 sub-processes
Author	Amber Barber
Revision Number	2
Last modified	May 25, 2016
Diagram Link	https://editor.signavio.com/p/editor?id=a6854b63d3a340628664fe73b2a992da

34.1 Diagram

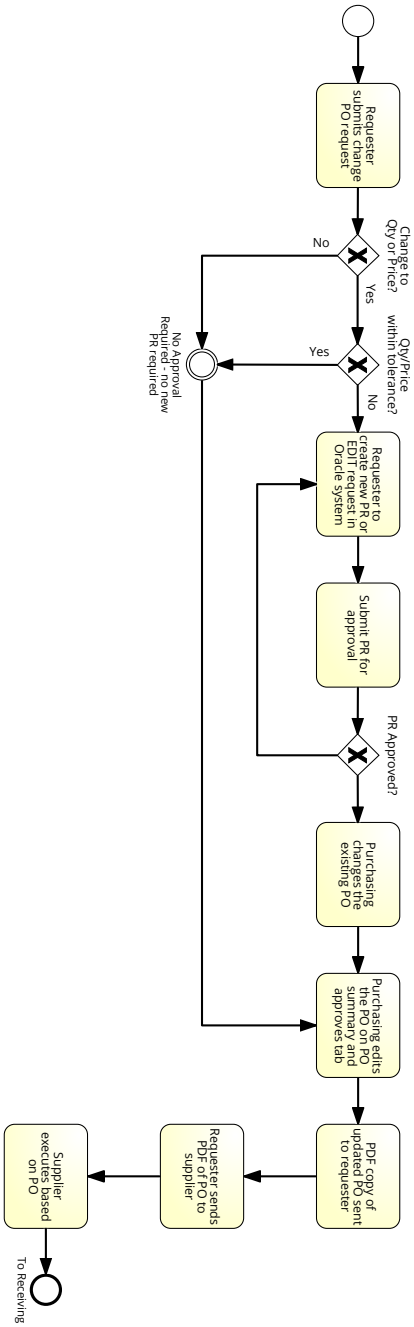

34.2 Description

Team Approved

34.3 Elements

Process elements

Start Event

Start Event

Requester submits change PO request

Task

Change to Qty or Price?

Data-based Exclusive (XOR) Gateway

Qty/Price within tolerance?

Data-based Exclusive (XOR) Gateway

Requester to create new PR or EDIT request in Oracle system

Task

Submit PR for approval

Task

PR Approved?

Data-based Exclusive (XOR) Gateway

Purchasing changes the existing PO

Task

No Approval Required - no new PR required

Intermediate Event

Purchasing edits the PO on PO summary and approves tab

Task

PDF copy of updated PO sent to requester

Task

Requester sends PDF of PO to supplier

Task

Supplier executes based on PO

Task

To Receiving

End Event

35 3.3.30 Supplier Creation Process

Diagram Type	Business Process Diagram (BPMN 2.0)
Path	Shared documents / Sub-Processes (L2) / Level 3 sub-processes
Author	Amber Barber
Revision Number	2

Last modified	May 25, 2016
Diagram Link	https://editor.signavio.com/p/editor?id=3fdd27cd908a414ab169753ea38ac225

35.1 Diagram

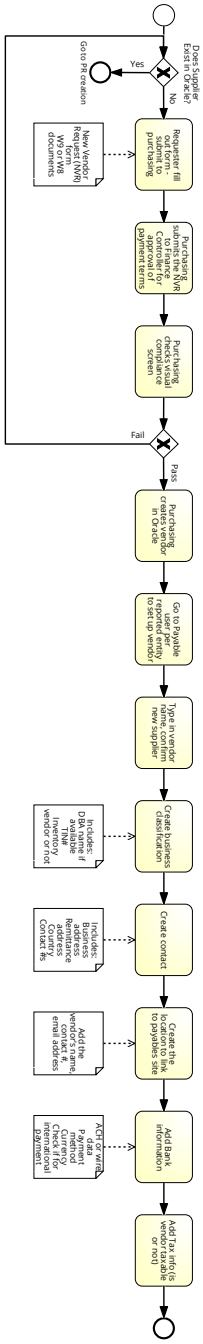

35.2 Description

Team Approved

35.3 Elements

Process elements

Start Event

Start Event

Does Supplier Exist in Oracle?

Data-based Exclusive (XOR) Gateway

Requester fill out form - submit to purchasing

Task

Data objects: New Vendor Request (NVR) form W9 or W8 documents

Purchasing submits the NVR to Finance Controller for approval of payment terms

Task

Purchasing checks visual compliance screen

Task

Data-based Exclusive (XOR) Gateway

Data-based Exclusive (XOR) Gateway

Purchasing creates vendor in Oracle

Task

Go to Payable user per reported entity to set up vendor

Task

Type in vendor name, confirm new supplier

Task

Create business classification

Task

Data objects: Includes: DBA name if available TIN# Inventory vendor or not

Create contact

Task

Data objects: Includes: Business address Remittance address Country Contact #s

Create the location to link to payables site

Task

Data objects: Add the vendor's name, contact #, email address

Add Bank information

Task

Data objects: ACH or wire data Payment method Currency Check if for international payment

Add Tax info (is vendor taxable or not)

Task

End Event

End Event

Go to PR creation

End Event

Data / IT-Systems

ACH or wire data Payment method Currency Check if for international payment

Data Object

Add the vendor's name, contact #, email address

Data Object

Includes: Business address Remittance address Country Contact #s

Data Object

Includes: DBA name if available TIN# Inventory vendor or not

Data Object

New Vendor Request (NVR) form W9 or W8 documents

Data Object

36 3.3.40 blanket purchase order updates

Diagram Type	Business Process Diagram (BPMN 2.0)
Path	Shared documents / Sub-Processes (L2) / Level 3 sub-processes
Author	Amber Barber
Revision Number	4
Last modified	May 25, 2016
Diagram Link	https://editor.signavio.com/p/editor?id=35b03a2df15c4ef38edef7c4ff2ceb1a

36.1 Diagram

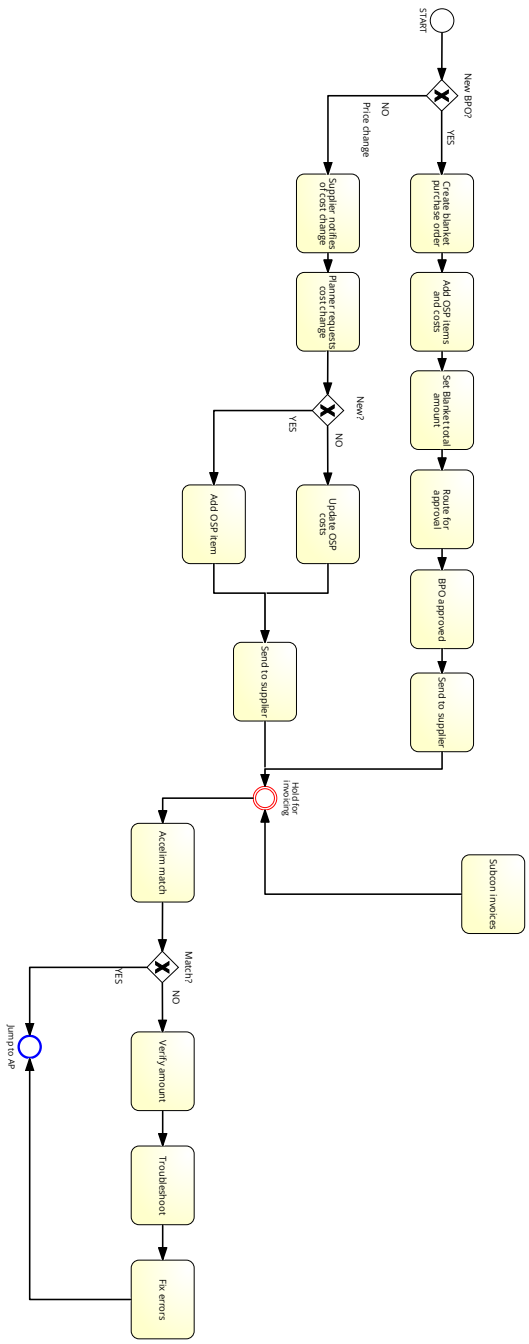

36.2 Description

Team Approved

36.3 Elements

Process elements

START

Start Event

New BPO?

Data-based Exclusive (XOR) Gateway

Create blanket purchase order

Task

Add OSP items and costs

Task

Set Blanket total amount

Task

Route for approval

Task

BPO approved

Task

Send to supplier

Task

Supplier notifies of cost change

Task

Planner requests cost change

Task

New?

Data-based Exclusive (XOR) Gateway

Update OSP costs

Task

Add OSP item

Task

Send to supplier

Task

Subcon invoices

Task

Hold for invoicing

Intermediate Event

Accelim match

Task

Match?

Data-based Exclusive (XOR) Gateway

Verify amount

Task

Troubleshoot

Task

Fix errors

Task

Jump to AP

End Event

37 3.3.60 Indirect Purchasing Requisitions

Diagram Type	Business Process Diagram (BPMN 2.0)
Path	Shared documents / Sub-Processes (L2) / Level 3 sub-processes
Author	Amber Barber
Revision Number	2
Last modified	May 25, 2016
Diagram Link	https://editor.signavio.com/p/editor?id=c5a8a25f5d7f4d679474043733ed0694

37.1 Diagram

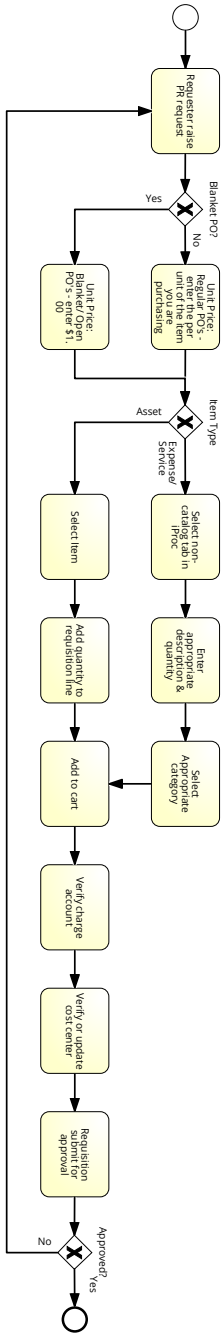

37.2 Description

Team Approved

37.3 Elements

Process elements

Start Event

Start Event

Requester raise PR request

Task

Blanket PO?

Data-based Exclusive (XOR) Gateway

Unit Price: Regular PO's - enter the per unit of the item you are purchasing

Task

Unit Price: Blanket/ Open PO's - enter $1.00

Task

Item Type

Data-based Exclusive (XOR) Gateway

Select Item

Task

Add quantity to requisition line

Task

Select non-catalog tab in iProc

Task

Enter appropriate description & quantity

Task

Select Appropriate category

Task

Add to cart

Task

Verify charge account

Task

Verify or update cost center

Task

Requisition submit for approval

Task

Approved?

Data-based Exclusive (XOR) Gateway

End Event

End Event

38 3.6.1 AP 1099 Process

Diagram Type	Business Process Diagram (BPMN 2.0)
Path	Shared documents / Sub-Processes (L2) / Level 3 sub-processes
Author	Amber Barber
Revision Number	2
Last modified	Apr 1, 2016
Diagram Link	https://editor.signavio.com/p/editor?id=877d412ea4d3473e850a4bb5a9208e33

38.1 Diagram

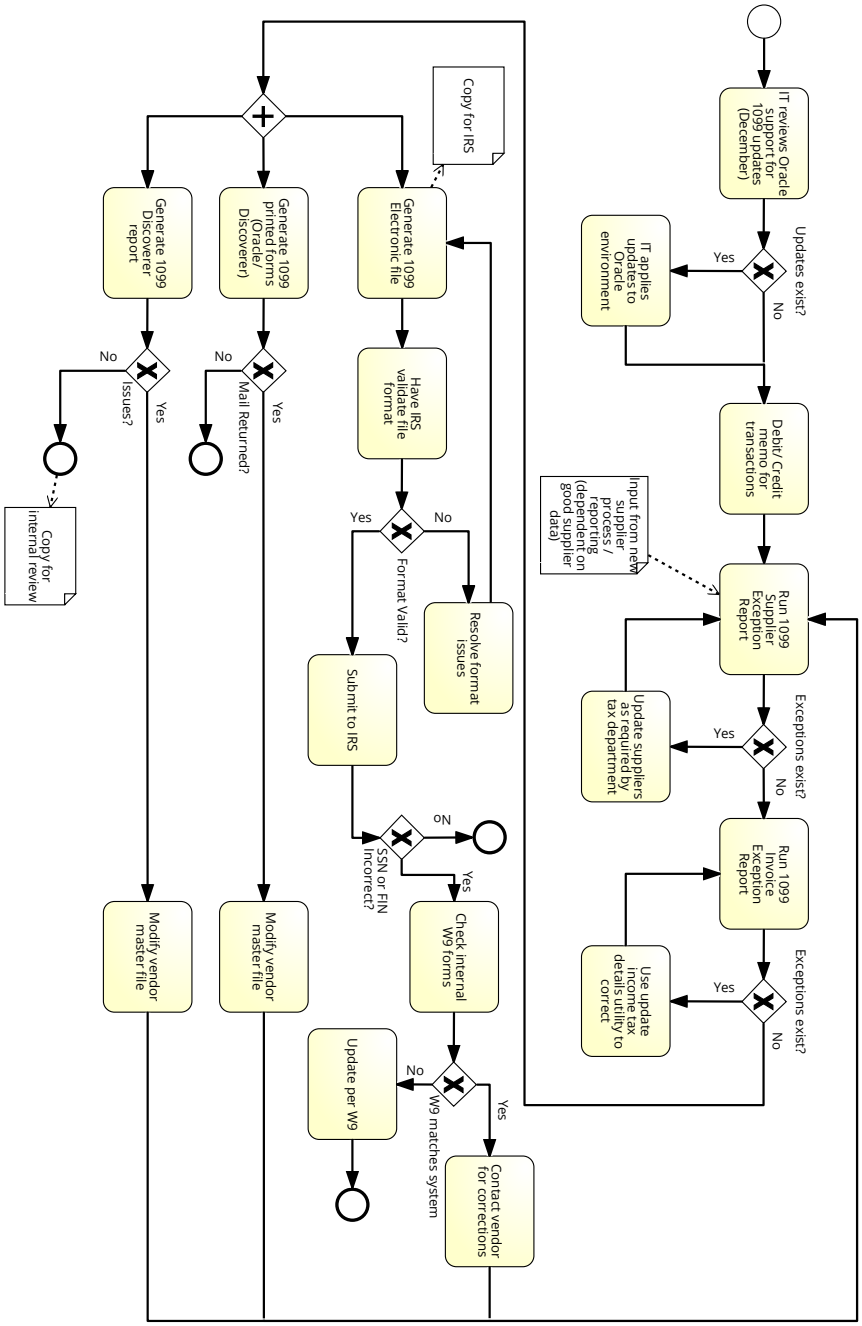

38.2 Description

Team Approved

38.3 Elements

Process elements

Start Event

Start Event

IT reviews Oracle support for 1099 updates (December)

Task

Updates exist?

Data-based Exclusive (XOR) Gateway

IT applies updates to Oracle environment

Task

Debit/ Credit memo for transactions

Task

Run 1099 Supplier Exception Report

Task

Data objects: Input from new supplier process / reporting (dependent on good supplier data)

Exceptions exist?

Data-based Exclusive (XOR) Gateway

Run 1099 Invoice Exception Report

Task

Exceptions exist?

Data-based Exclusive (XOR) Gateway

Use update income tax details utility to correct

Task

Parallel Gateway

Parallel Gateway

Generate 1099 Electronic file

Task

Data objects: Copy for IRS

Have IRS validate file format

Task

Format Valid?

Data-based Exclusive (XOR) Gateway

Resolve format issues

Task

Submit to IRS

Task

SSN or FIN Incorrect?

Data-based Exclusive (XOR) Gateway

End Event

End Event

Check internal W9 forms

Task

W9 matches system

Data-based Exclusive (XOR) Gateway

Contact vendor for corrections

Task

Update per W9

Task

End Event

End Event

Generate 1099 printed forms (Oracle/ Discoverer)

Task

Mail Returned?

Data-based Exclusive (XOR) Gateway

Modify vendor master file

Task

End Event

End Event

Generate 1099 Discoverer report

Task

Issues?

Data-based Exclusive (XOR) Gateway

Modify vendor master file

Task

End Event

End Event

Data objects: Copy for internal review

Update suppliers as required by tax department

Task

Data / IT-Systems

Copy for internal review

Data Object

Copy for IRS

Data Object

Input from new supplier process / reporting (dependent on good supplier data)

Data Object

39 3.6.1 AP Invoice Creation, Validation with Accelim

Diagram Type	Business Process Diagram (BPMN 2.0)
Path	Shared documents / Sub-Processes (L2) / Level 3 sub-processes
Author	Amber Barber
Revision Number	3
Last modified	May 26, 2016
Diagram Link	https://editor.signavio.com/p/editor?id=b426ad50401a414c8e615e4d8068d33c

39.1 Diagram

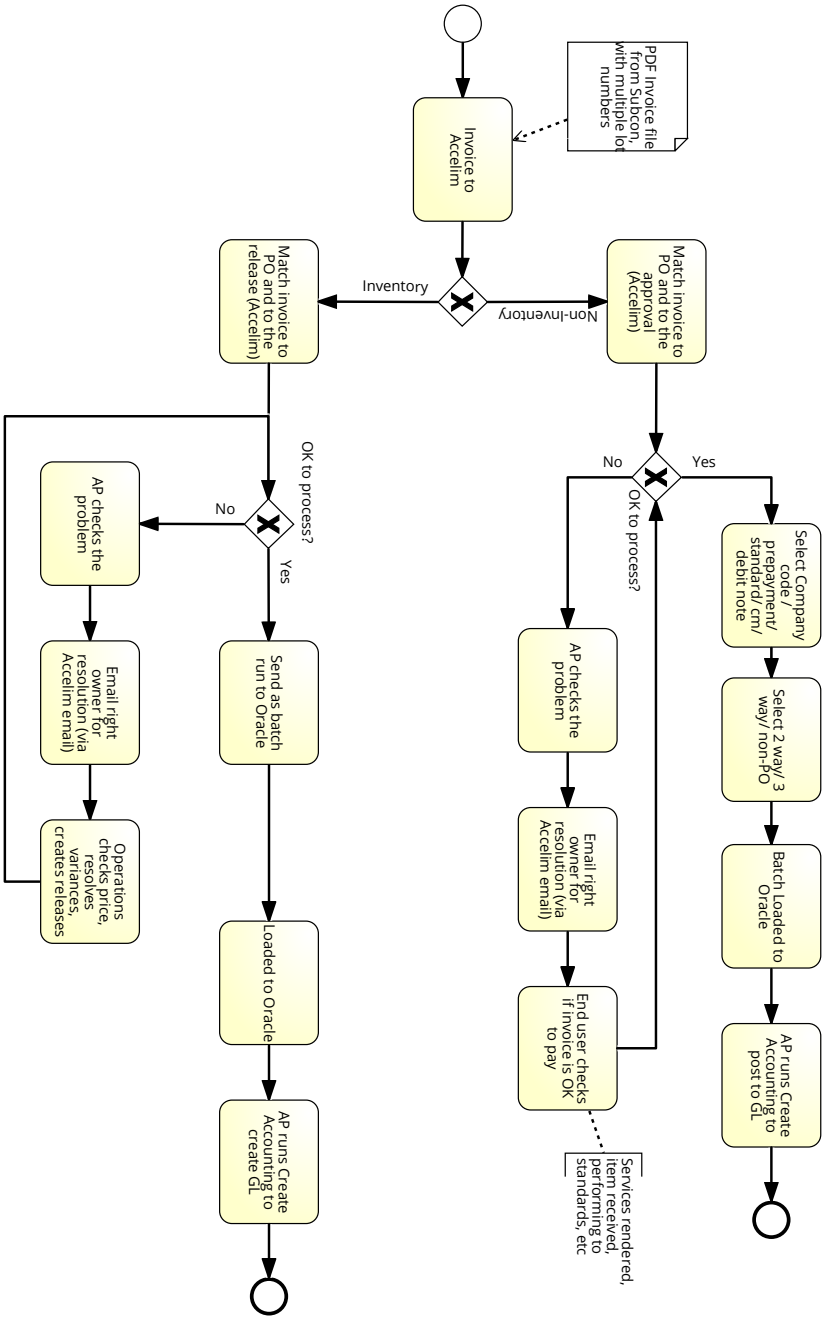

39.2 Description

Ready for team review 5

39.3 Elements

Process elements

Start Event

Start Event

Invoice to Accelim

Task

Data objects: PDF Invoice file from Subcon, with multiple lot numbers

Data-based Exclusive (XOR) Gateway

Data-based Exclusive (XOR) Gateway

Match invoice to PO and to the approval (Accelim)

Task

OK to process?

Data-based Exclusive (XOR) Gateway

Select Company code / prepayment/ standard/ cm/ debit note

Task

Select 2 way/ 3 way/ non-PO

Task

Batch Loaded to Oracle

Task

AP runs Create Accounting to post to GL

Task

End Event

End Event

AP checks the problem

Task

Email right owner for resolution (via Accelim email)

Task

End user checks if invoice is OK to pay

Task

Match invoice to PO and to the release (Accelim)

Task

OK to process?

Data-based Exclusive (XOR) Gateway

Send as batch run to Oracle

Task

Loaded to Oracle

Task

AP runs Create Accounting to create GL

Task

End Event

End Event

AP checks the problem

Task

Email right owner for resolution (via Accelim email)

Task

Operations checks price, resolves variances, creates releases

Task

Data / IT-Systems

PDF Invoice file from Subcon, with multiple lot numbers

Data Object

40 3.6.1 AP Payment Process

Diagram Type	Business Process Diagram (BPMN 2.0)
Path	Shared documents / Sub-Processes (L2) / Level 3 sub-processes
Author	Amber Barber
Revision Number	2
Last modified	May 26, 2016
Diagram Link	https://editor.signavio.com/p/editor?id=45b92077fb0848cab3bcb1cddc4dc22c

40.1 Diagram

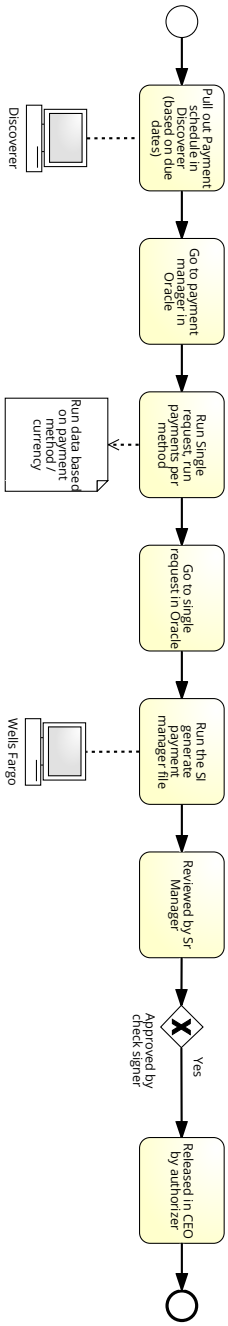

40.2 Description

Ready for team review 5

40.3 Elements

Process elements

Start Event

Start Event

Pull out Payment schedule in Discoverer (based on due dates)

Task

IT Systems: Discoverer

Go to payment manager in Oracle

Task

Run Single request, run payments per method

Task

Data objects: Run data based on payment method / currency

Go to single request in Oracle

Task

Run the SI generate payment manager file

Task

IT Systems: Wells Fargo

Reviewed by Sr Manager

Task

Approved by check signer

Data-based Exclusive (XOR) Gateway

Released in CEO by authorizer

Task

End Event

End Event

Data / IT-Systems

Discoverer

IT System

Dictionary entries: Discoverer

Run data based on payment method / currency

Data Object

Wells Fargo

IT System

Outside system

Dictionary entries: Wells Fargo : Outside system

40.4 Linked dictionary entries

Discoverer

Wells Fargo

Outside system

41 3.6.1 AP Prepayments

Diagram Type	Business Process Diagram (BPMN 2.0)
Path	Shared documents / Sub-Processes (L2) / Level 3 sub-processes
Author	Amber Barber
Revision Number	2
Last modified	May 26, 2016
Diagram Link	https://editor.signavio.com/p/editor?id=cab7745176d64a358165c3afd998e4d1

41.1 Diagram

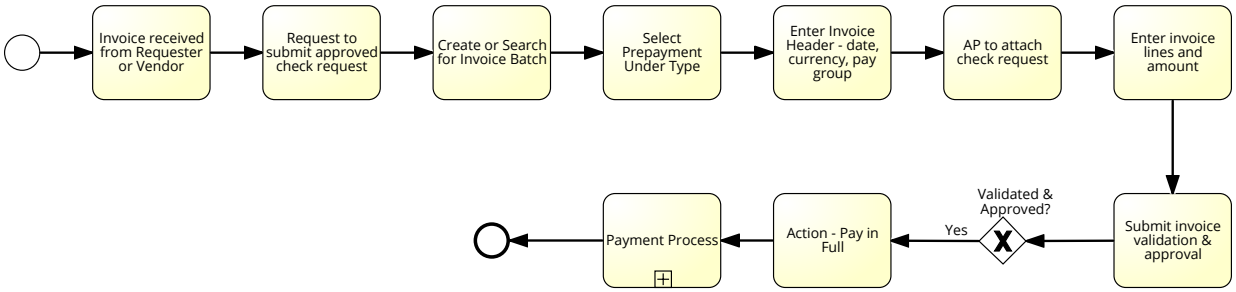

41.2 Description

Ready for team review 5

41.3 Elements

Process elements

Start Event

Start Event

Invoice received from Requester or Vendor

Task

Request to submit approved check request

Task

Create or Search for Invoice Batch

Task

Select Prepayment Under Type

Task

Enter Invoice Header - date, currency, pay group

Task

AP to attach check request

Task

Enter invoice lines and amount

Task

Submit invoice validation & approval

Task

Validated & Approved?

Data-based Exclusive (XOR) Gateway

Action - Pay in Full

Task

Payment Process

Collapsed Subprocess

Subprocess reference: 3.6.1 AP Payment Process (https://editor.signavio.com/p/model/45b92077fb0848cab3bcb1cddc4dc22c)

End Event

End Event

42 4.5.10 Order Entry

Diagram Type	Business Process Diagram (BPMN 2.0)
Path	Shared documents / Sub-Processes (L2) / Level 3 sub-processes
Author	Amber Barber
Revision Number	4
Last modified	May 21, 2016
Diagram Link	https://editor.signavio.com/p/editor?id=25934cba95244f34b7d372a2be8fd28b

42.1 Diagram

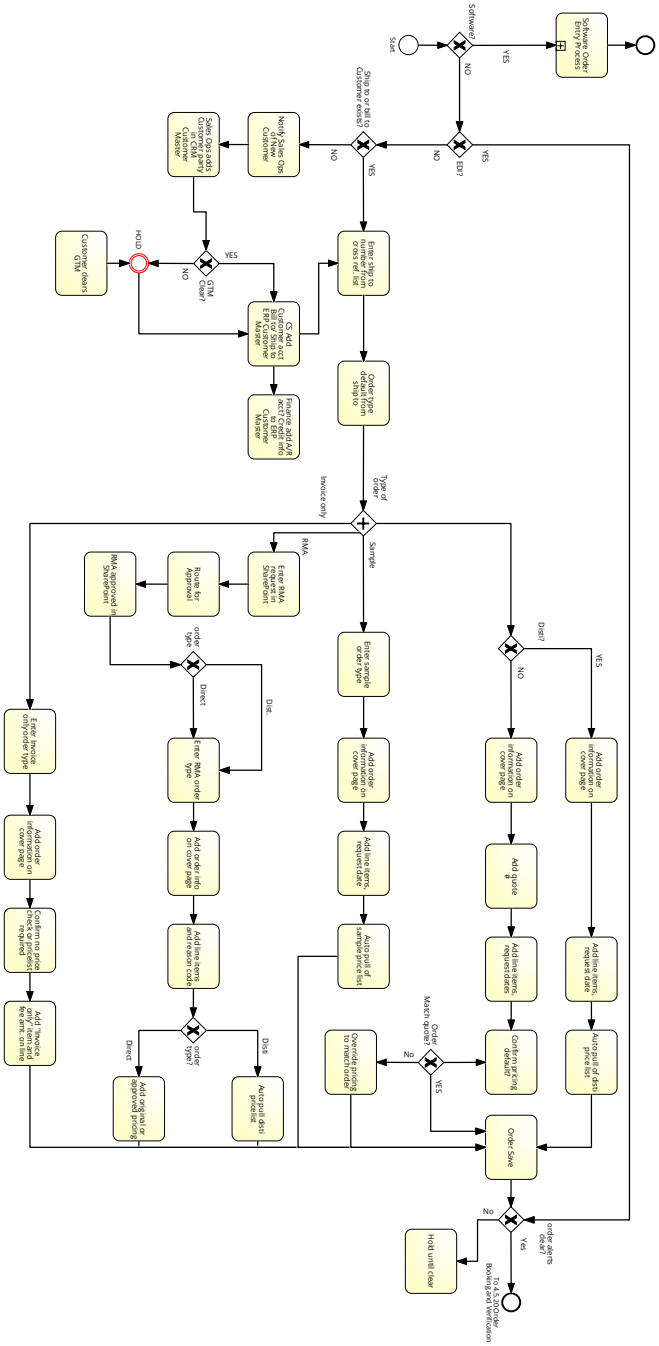

42.2 Description

Team Approved, all but Software

42.3 Elements

Process elements

Start

Start Event

Software?

Data-based Exclusive (XOR) Gateway

Software Order Entry Process

Collapsed Subprocess

Subprocess reference: 4.5.10-SW Software Orders (https://editor.signavio.com/p/model/80a78d3022b441738e5fff19a1018c42)

End Event

End Event

EDI?

Data-based Exclusive (XOR) Gateway

Ship to or bill to Customer exists?

Data-based Exclusive (XOR) Gateway

Notify Sales Ops of New Customer

Task

Sales Ops adds Customer party in CRM Customer Master

Task

GTM Clear?

Data-based Exclusive (XOR) Gateway

Customer clears GTM

Task

HOLD

Intermediate Event

CS Add Customer acct Bill to/ Ship to ERP Customer Master

Task

Finance add A/R acct? Credit info to ERP Customer Master

Task

Enter ship to number from cross ref. list

Task

Order type default from ship to

Task

Type of order

Parallel Gateway

Disti?

Data-based Exclusive (XOR) Gateway

Add order information on cover page

Task

Add line items, request date

Task

Auto pull of disti price list

Task

Add order information on cover page

Task

Add quote #

Task

Add line items, request dates

Task

Enter sample order type

Task

Add order information on cover page

Task

Add line items, request date

Task

Auto pull of sample price list

Task

Enter RMA request in SharePoint

Task

Route for Approval

Task

RMA approved in SharePoint

Task

order type

Data-based Exclusive (XOR) Gateway

Enter RMA order type

Task

Add order info on cover page

Task

Add line items and reason code

Task

order type?

Data-based Exclusive (XOR) Gateway

Auto pull disti pricelist

Task

Add original or approved pricing

Task

Enter Invoice only order type

Task

Add order information on cover page

Task

Confirm no price check or pricelist required

Task

Add "Invoice only" item and fee amt. on line

Task

Order Match quote?

Data-based Exclusive (XOR) Gateway

Confirm pricing default?

Task

Override pricing to match order

Task

Order Save

Task

order alerts clear?

Data-based Exclusive (XOR) Gateway

Hold until clear

Task

To 4.5.20 Order Booking and Verification

End Event

43 4.5.10-SW Software Orders

Diagram Type	Business Process Diagram (BPMN 2.0)
Path	Shared documents / Sub-Processes (L2) / Level 3 sub-processes
Author	Amber Barber
Revision Number	4
Last modified	May 21, 2016
Diagram Link	https://editor.signavio.com/p/editor?id=80a78d3022b441738e5fff19a1018c42

43.1 Diagram

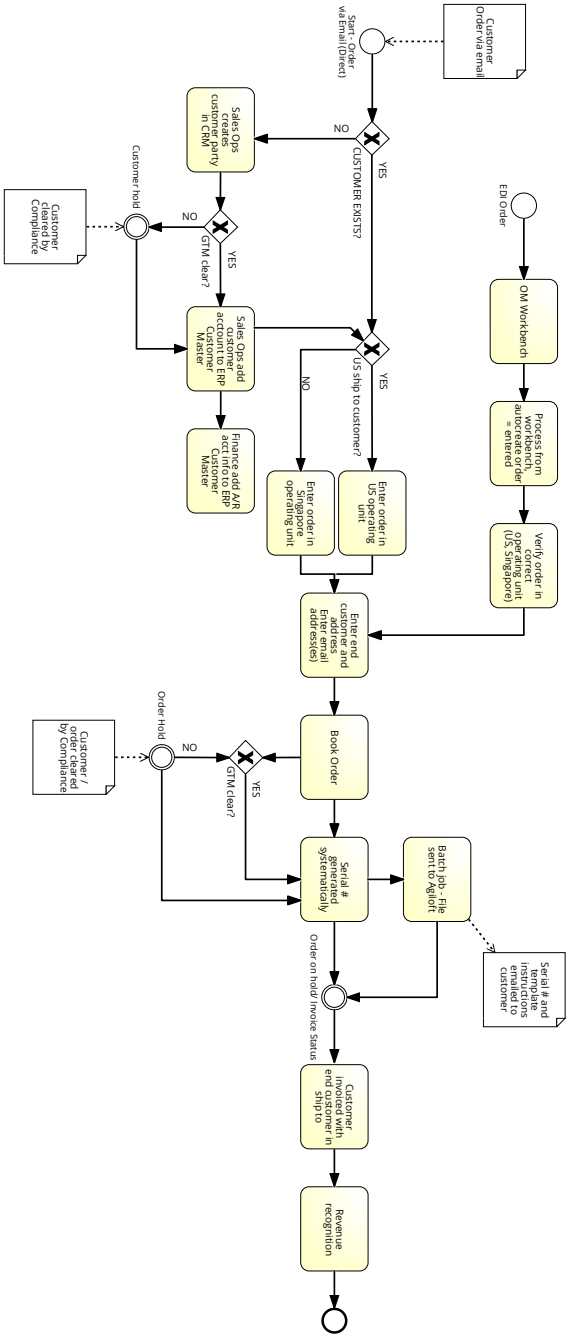

43.2 Description

Team Approved

43.3 Elements

Process elements

Start - Order via Email (Direct)

Start Event

Data objects: Customer Order via email

CUSTOMER EXISTS?

Data-based Exclusive (XOR) Gateway

Sales Ops creates customer party in CRM

Task

GTM clear?

Data-based Exclusive (XOR) Gateway

Customer hold

Intermediate Event

Data objects: Customer cleared by Compliance

Sales Ops add customer acctount to ERP Customer Master

Task

Finance add A/R acct info to ERP Customer Master

Task

US ship to customer?

Data-based Exclusive (XOR) Gateway

Enter order in Singapore operating unit

Task

Enter order in US operating unit

Task

EDI Order

Start Event

OM Workbench

Task

Process from workbench, autocreate order = entered

Task

Verify order in correct operating unit (US, Singapore)

Task

Enter end customer and address Enter email address(es)

Task

Book Order

Task

Order Hold

Intermediate Event

Data objects: Customer / order cleared by Compliance

GTM clear?

Data-based Exclusive (XOR) Gateway

Serial # generated systematically

Task

Batch job - File sent to Agiloft

Task

Data objects: Serial # and template instructions emailed to customer

Order on hold/ Invoice Status

Intermediate Event

Customer invoiced with end customer in ship to

Task

Revenue recognition

Task

End Event

End Event

Data / IT-Systems

Customer / order cleared by Compliance

Data Object

Customer cleared by Compliance

Data Object

Customer Order via email

Data Object

Serial # and template instructions emailed to customer

Data Object

44 4.5.10.30 RMA Return Materials Disposition Process

Diagram Type	Business Process Diagram (BPMN 2.0)
Path	Shared documents / Sub-Processes (L2) / Level 3 sub-processes
Author	Amber Barber
Revision Number	3
Last modified	May 21, 2016
Diagram Link	https://editor.signavio.com/p/editor?id=8adbe47323d747848a651cdd540245d6

44.1 Diagram

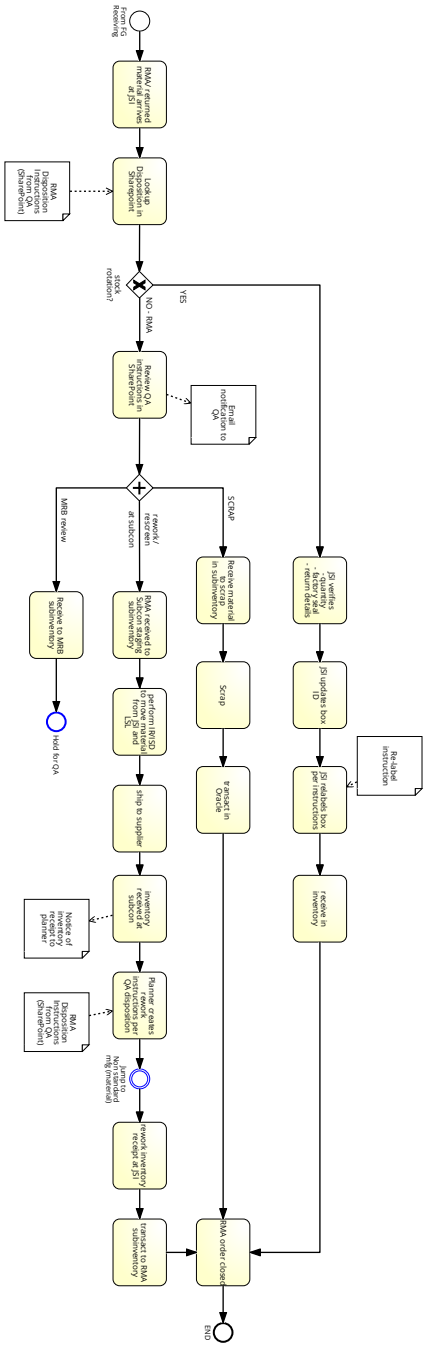

44.2 Description

Team Approved

44.3 Elements

Process elements

From FG Receiving

Start Event

RMA/ returned material arrives at JSI

Task

Lookup Disposition in Sharepoint

Task

Data objects: RMA Disposition Instructions from QA (SharePoint)

stock rotation?

Data-based Exclusive (XOR) Gateway

JSI verifies - quantity - factory seal - return details

Task

JSI updates box ID

Task

JSI relabels box per instructions

Task

Data objects: Re-label instruction

receive in inventory

Task

Review QA instructions in SharePoint

Task

Data objects: Email notification to QA

Parallel Gateway

Parallel Gateway

Receive material to scrap in subinventory

Task

Scrap

Task

transact in Oracle

Task

RMA received to Subcon staging subinventory

Task

perform IR/ISD to move material from JSI and LSL

Task

ship to supplier

Task

inventory received at subcon

Task

Data objects: Notice of inventory receipt to planner

Planner creates rework instructions per QA disposition

Task

Data objects: RMA Disposition Instructions from QA (SharePoint)

Jump to Non standard mfg (material)

Intermediate Event

rework inventory receipt at JSI

Task

transact to RMA subinventory

Task

RMA order closed

Task

END

End Event

Receive to MRB subinventory

Task

Hold for QA

End Event

Data / IT-Systems

Email notification to QA

Data Object

Notice of inventory receipt to planner

Data Object

Re-label instruction

Data Object

RMA Disposition Instructions from QA (SharePoint)

Data Object

RMA Disposition Instructions from QA (SharePoint)

Data Object

45 4.5.20 order booking and verification

Diagram Type	Business Process Diagram (BPMN 2.0)
Path	Shared documents / Sub-Processes (L2) / Level 3 sub-processes
Author	Amber Barber

Revision Number	5
Last modified	May 21, 2016
Diagram Link	https://editor.signavio.com/p/editor?id=77d2ab88ff31435f84744f5c00999e26

45.1 Diagram

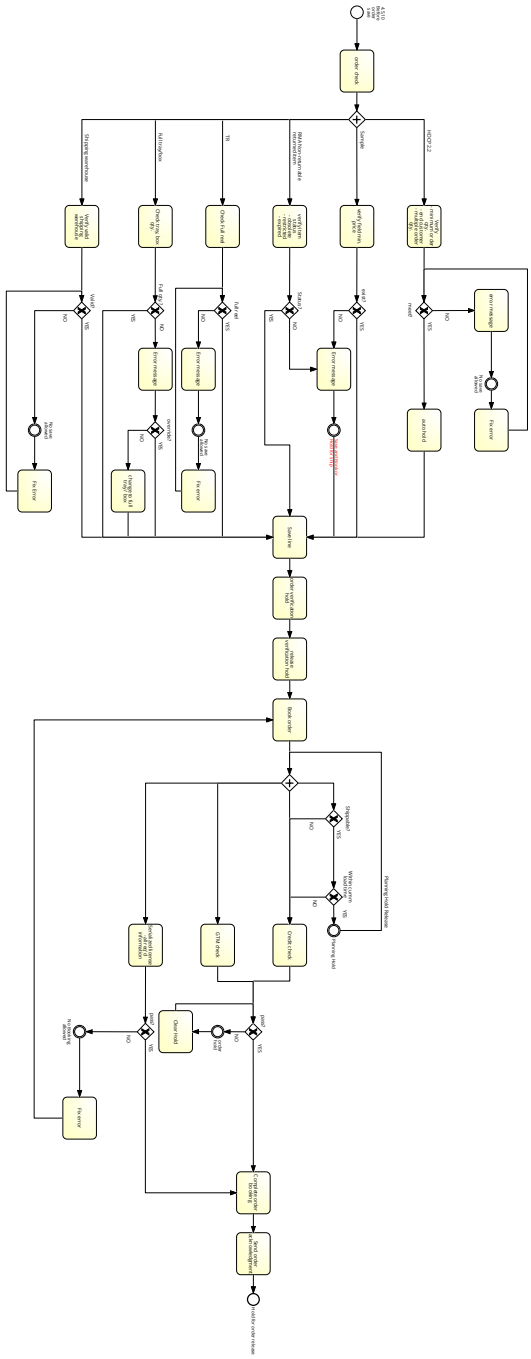

45.2 Description

Team Approved

45.3 Elements

Process elements

4.5.10 Before order save

Start Event

order check

Task

Parallel Gateway

Parallel Gateway

Verify - minimum order qty. - end customer - multiple order qty.

Task

meet?

Data-based Exclusive (XOR) Gateway

error message

Task

No save allowed

Intermediate Event

Fix error

Task

auto hold

Task

verify field min. price

Task

exist?

Data-based Exclusive (XOR) Gateway

verify item status - obsolete - restricted - expired

Task

Status?

Data-based Exclusive (XOR) Gateway

Error message

Task

Save and Book or Hold for ship

Intermediate Event

Check Full reel

Task

full reel

Data-based Exclusive (XOR) Gateway

Error message

Task

No save allowed

Intermediate Event

Fix error

Task

Check tray, box qty.

Task

Full qty.?

Data-based Exclusive (XOR) Gateway

Error message

Task

override?

Data-based Exclusive (XOR) Gateway

change to full tray / box

Task

Verify valid shipping warehouse

Task

Valid?

Data-based Exclusive (XOR) Gateway

Save line

Task

order verification hold

Task

release verification hold

Task

Book order

Task

Parallel Gateway

Parallel Gateway

Shippable?

Data-based Exclusive (XOR) Gateway

Within cumm load time

Data-based Exclusive (XOR) Gateway

Planning Hold

Intermediate Event

Credit check

Task

GTM check

Task

pass?

Data-based Exclusive (XOR) Gateway

order hold

Intermediate Event

Clear Hold

Task

Serialized license -all req'd information

Task

pass?

Data-based Exclusive (XOR) Gateway

Complete order booking

Task

Send order acknowledgment

Task

Hold for order release

End Event

No Booking allowed

Intermediate Event

Fix error

Task

No save allowed

Intermediate Event

Fix Error

Task

46 4.5.20.10 order scheduling

Diagram Type	Business Process Diagram (BPMN 2.0)
Path	Shared documents / Sub-Processes (L2) / Level 3 sub-processes
Author	Amber Barber
Revision Number	4
Last modified	May 21, 2016
Diagram Link	https://editor.signavio.com/p/editor?id=95edf84699a64b7cb477b18663f60830

46.1 Diagram

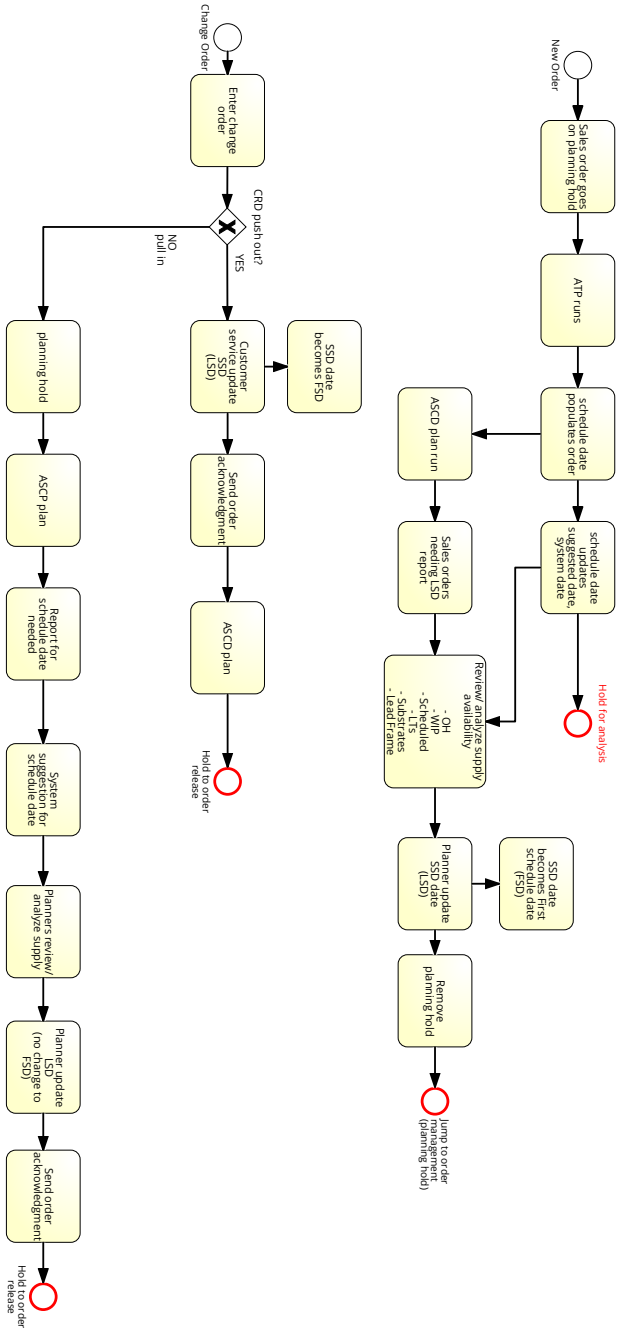

46.2 Description

Team Approved

46.3 Elements

Process elements

Change Order

Start Event

Enter change order

Task

CRD push out?

Data-based Exclusive (XOR) Gateway

Customer service update SSD (LSD)

Task

SSD date becomes FSD

Task

Send order acknowledgment

Task

ASCD plan

Task

Hold to order release

End Event

planning hold

Task

ASCP plan

Task

Report for schedule date needed

Task

System suggestion for schedule date

Task

Planners review/ analyze supply

Task

Planner update LSD (no change to FSD)

Task

Send order acknowledgment

Task

Hold to order release

End Event

New Order

Start Event

Sales order goes on planning hold

Task

ATP runs

Task

schedule date populates order

Task

schedule date updates suggested date, system date

Task

Hold for analysis

End Event

ASCD plan run

Task

Sales orders needing LSD report

Task

Review/ analyze supply availability - OH - WIP - Scheduled - LTs - Substrates - Lead Frame

Task

Planner update SSD date (LSD)

Task

SSD date becomes First schedule date (FSD)

Task

Remove planning hold

Task

Jump to order management (planning hold)

End Event

47 4.5.xx Board-Kit Build and Order

Diagram Type	Business Process Diagram (BPMN 2.0)
Path	Shared documents / Sub-Processes (L2) / Level 3 sub-processes
Author	Amber Barber
Revision Number	4
Last modified	Apr 19, 2016
Diagram Link	https://editor.signavio.com/p/editor?id=e2a83f4ca2fd4570a31b5e3484e8dd55

47.1 Diagram

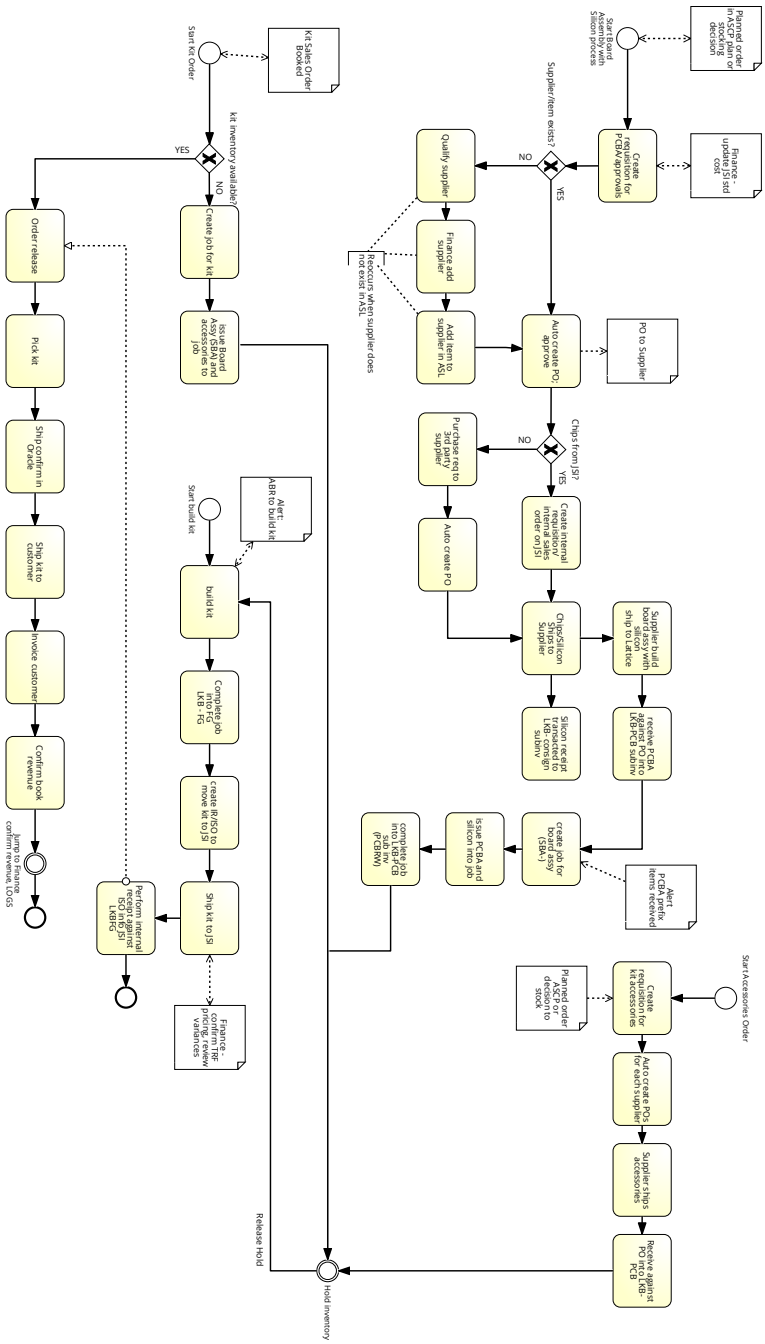

47.2 Description

Team Approved

47.3 Elements

Process elements

Start Board Assembly with Silicon process

Start Event

Data objects: Planned order in ASCP plan or stocking decision

Create requisition for PCBA/approvals

Task

Data objects: Finance - update JSI std cost

Supplier/item exists?

Data-based Exclusive (XOR) Gateway

Auto create PO; approve

Task

Data objects: PO to Supplier

Chips from JSI?

Data-based Exclusive (XOR) Gateway

Create internal requisition/ internal sales order on JSI

Task

Purchase req to 3rd party supplier

Task

Auto create PO

Task

Chips/Silicon Ships to Supplier

Task

Silicon receipt transacted to LKB- consign subinv

Task

Supplier build board assy with silicon ship to Lattice

Task

receive PCBA against PO into LKB-PCB subinv

Task

create job for board assy (SBA-)

Task

Data objects: Alert PCBA prefix items received

issue PCBA and silicon into job

Task

complete job into LKB-PCB sub inv (PCBRW)

Task

Qualify supplier

Task

Finance add supplier

Task

Add item to supplier in ASL

Task

Start Kit Order

Start Event

Data objects: Kit Sales Order Booked

kit inventory available?

Data-based Exclusive (XOR) Gateway

Create job for kit

Task

issue Board Assy (SBA) and accessories to job

Task

Order release

Task

Pick kit

Task

Ship confirm in Oracle

Task

Ship kit to customer

Task

Invoice customer

Task

Confirm book revenue

Task

Jump to Finance confirm revenue, LOGS

Intermediate Event

End Event

End Event

Start build kit

Start Event

Start Accessories Order

Start Event

Create requisition for kit accessories

Task

Data objects: Planned order ASCP or decision to stock

Auto create POs for each supplier

Task

Supplier ships accessories

Task

Receive against PO into LKB- PCB

Task

Hold inventory

Intermediate Event

build kit

Task

Data objects: Alert: ABR to build kit

Complete job into FG LKB - FG

Task

create IR/ISO to move kit to JSI

Task

Ship kit to JSI

Task

Data objects: Finance - confirm TRF pricing, review variances

Perform internal receipt against ISO info JSI LKBFG

Task

End Event

End Event

Data / IT-Systems

Alert PCBA prefix items received

Data Object

Alert: ABR to build kit

Data Object

Finance - confirm TRF pricing, review variances

Data Object

Finance - update JSI std cost

Data Object

Kit Sales Order Booked

Data Object

Planned order ASCP or decision to stock

Data Object

Planned order in ASCP plan or stocking decision

Data Object

PO to Supplier

Data Object

48 4.5.xx HDMI-MHL LLC service contracts

Diagram Type	Business Process Diagram (BPMN 2.0)
Path	Shared documents / Sub-Processes (L2) / Level 3 sub-processes
Author	Amber Barber
Revision Number	3
Last modified	Apr 20, 2016
Diagram Link	https://editor.signavio.com/p/editor?id=8079a5725c424cc5b54dc6aa094c93fc

48.1 Diagram

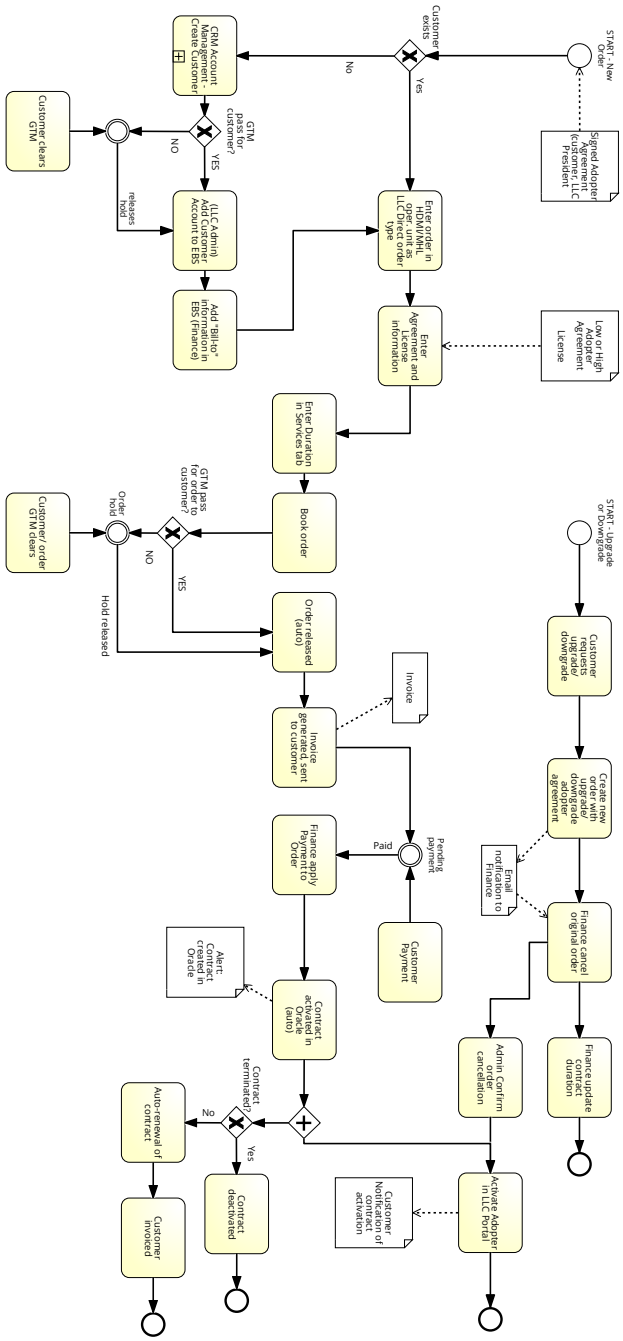

48.2 Description

Team Approved

48.3 Elements

Process elements

START - New Order

Start Event

Data objects: Signed Adopter Agreement (customer, LLC President

Customer exists

Data-based Exclusive (XOR) Gateway

CRM Account Management - Create Customer

Collapsed Subprocess

Subprocess reference: Account Management (L3) (https://editor.signavio.com/p/model/6ab501fd19734dc48c8cc33fb2ca082a)

GTM pass for customer?

Data-based Exclusive (XOR) Gateway

Customer clears GTM

Task

releases hold

Intermediate Event

(LLC Admin) Add Customer Account to EBS

Task

Add "Bill-to" information in EBS (Finance)

Task

Enter order in HDMI/MHL oper. unit as LLC Direct order type

Task

Enter Agreement and License information

Task

Data objects: Low or High Adopter Agreement License

Enter Duration in Services tab

Task

Book order

Task

GTM pass for order to customer?

Data-based Exclusive (XOR) Gateway

Customer/ order GTM clears

Task

Order hold

Intermediate Event

Order released (auto)

Task

Invoice generated, sent to customer

Task

Data objects: Invoice

START - Upgrade or Downgrade

Start Event

Customer requests upgrade/ downgrade

Task

Create new order with upgrade/ downgrade adopter agreement

Task

Data objects: Email notification to Finance

Finance cancel original order

Task

Data objects: Email notification to Finance

Finance update contract duration

Task

End Event

End Event

Admin Confirm order cancellation

Task

Customer Payment

Task

Pending payment

Intermediate Event

Finance apply Payment to Order

Task

Contract activated in Oracle (auto)

Task

Data objects: Alert: Contract created in Oracle

Parallel Gateway

Parallel Gateway

Activate Adopter in LLC Portal

Task

Data objects: Customer Notification of contract activation

End Event

End Event

Contract terminated?

Data-based Exclusive (XOR) Gateway

Contract deactivated

Task

End Event

End Event

Auto-renewal of contract

Task

Customer invoiced

Task

End Event

End Event

Data / IT-Systems

Alert: Contract created in Oracle

Data Object

Customer Notification of contract activation

Data Object

Email notification to Finance

Data Object

Invoice

Data Object

Low or High Adopter Agreement License

Data Object

Signed Adopter Agreement (customer, LLC President

Data Object

49 4.5.xx Simplay orders

Diagram Type	Business Process Diagram (BPMN 2.0)
Path	Shared documents / Sub-Processes (L2) / Level 3 sub-processes
Author	Amber Barber
Revision Number	5
Last modified	Apr 28, 2016
Diagram Link	https://editor.signavio.com/p/editor?id=3b47ae8b2fa84f87a4dd9b7702eaf02f

49.1 Diagram

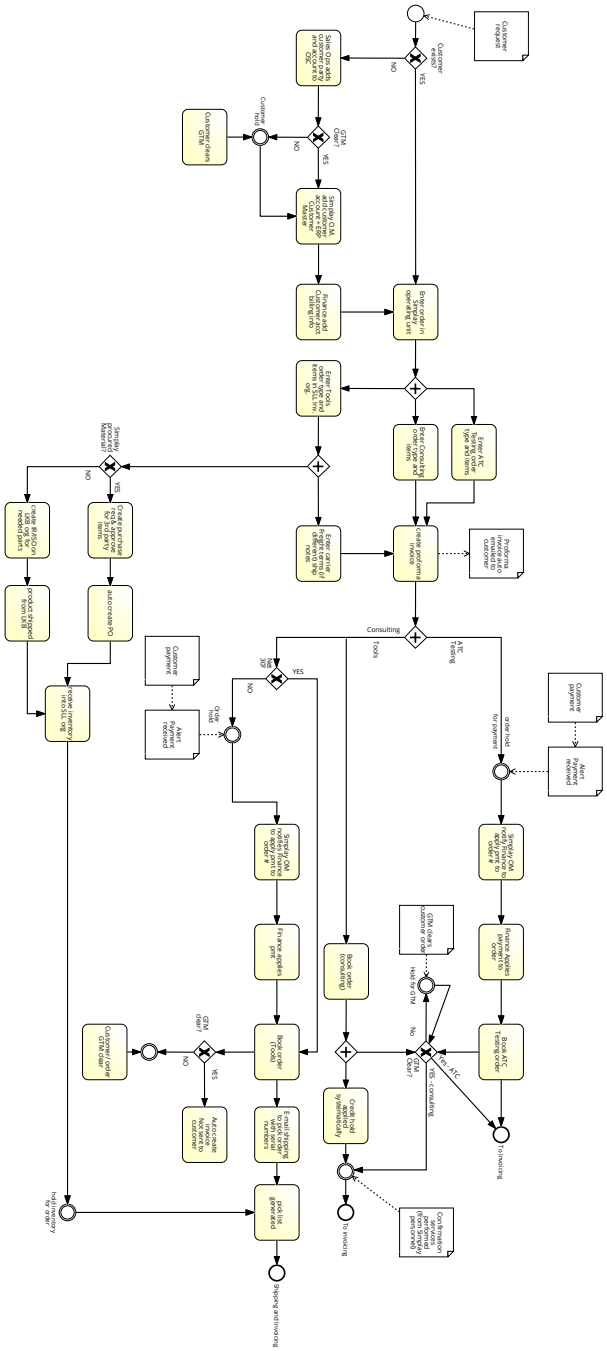

49.2 Description

Team Approved

49.3 Elements

Process elements

Start Event

Start Event

Data objects: Customer request

Customer exists?

Data-based Exclusive (XOR) Gateway

Sales Ops adds customer party and account to OSC

Task

GTM Clear?

Data-based Exclusive (XOR) Gateway

Customer clears GTM

Task

Customer hold

Intermediate Event

Simplay O.M. add customer account + ERP Customer Master

Task

Finance add Customer acct billing info

Task

Enter order in Simplay operating unit

Task

Parallel Gateway

Parallel Gateway

Enter ATC Testing order type and items

Task

Enter Consulting order type and items

Task

Enter Tools order type and items in SLL Inv. org.

Task

Parallel Gateway

Parallel Gateway

Enter carrier Freight terms (if different) ship notes

Task

create proforma invoice

Task

Data objects: Proforma invoice auto emailed to customer

Parallel Gateway

Parallel Gateway

order hold for payment

Intermediate Event

Data objects: Alert Payment received

Simplay OM notify Finance to apply pmt to order #

Task

Finance Applies payment to order

Task

Book ATC Testing order

Task

Book order (consulting)

Task

Parallel Gateway

Parallel Gateway

GTM Clear?

Data-based Exclusive (XOR) Gateway

To Invoicing

End Event

Hold for GTM

Intermediate Event

Data objects: GTM clears customer order

Credit hold applied systematically

Task

Intermediate Event

Intermediate Event

Data objects: Confirmation services performed (from Simplay personnel)

To invoicing

End Event

Net 30?

Data-based Exclusive (XOR) Gateway

Order hold

Intermediate Event

Data objects: Alert Payment received

Simplay OM notifies Finance to apply pmt to order #

Task

Finance applies pmt

Task

Book order (Tools)

Task

GTM clear?

Data-based Exclusive (XOR) Gateway

Auto create invoice Not sent to customer

Task

E-mail shipping to pick order with serial numbers

Task

Simplay procured Material?

Data-based Exclusive (XOR) Gateway

Create purchase req & approve for 3rd party items

Task

auto create PO

Task

create IR/ISO on LKB org for needed parts

Task

product shipped from LKB

Task

receive inventory into SLL org

Task

hold inventory for order

Intermediate Event

pick list generated

Task

Shipping and Invoicing

End Event

Customer/ order GTM clear

Task

Intermediate Event

Intermediate Event

Data / IT-Systems

Alert Payment received

Data Object

Alert Payment received

Data Object

Confirmation services performed (from Simplay personnel)

Data Object

Customer payment

Data Object

Customer payment

Data Object

Customer request

Data Object

GTM clears customer order

Data Object

Proforma invoice auto emailed to customer

Data Object

50 4.8.1 Customer Invoicing

Diagram Type	Business Process Diagram (BPMN 2.0)
Path	Shared documents / Sub-Processes (L2) / Level 3 sub-processes
Author	Amber Barber
Revision Number	4
Last modified	May 31, 2016
Diagram Link	https://editor.signavio.com/p/editor?id=ae1eb206606045dcbba068083937a4ef

50.1 Diagram

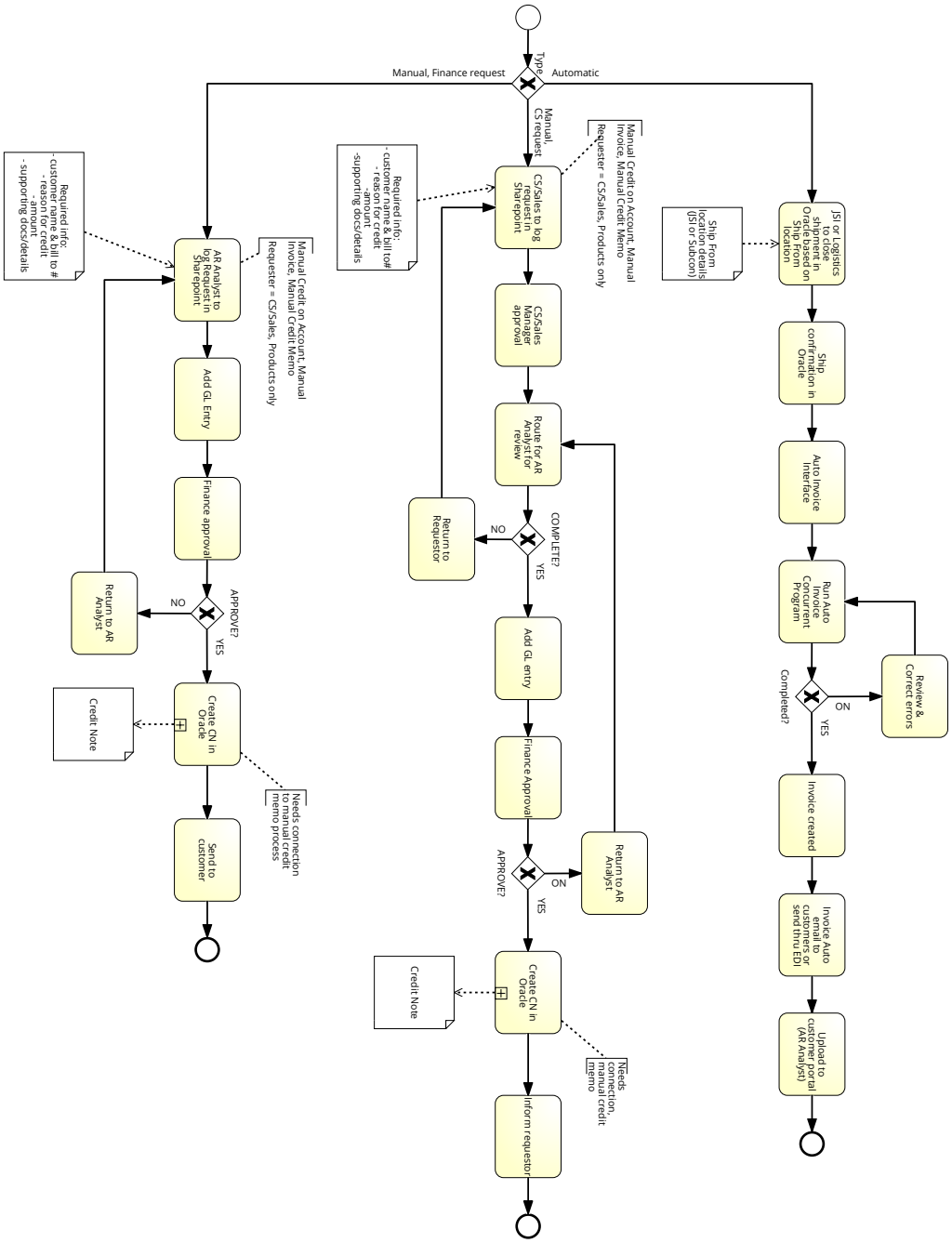

50.2 Description

Team Approved
Methods of invoicing customers, including automatic and manual requests from customer service (CS) or finance.

50.3 Elements

Process elements

Start Event

Start Event

Type

Data-based Exclusive (XOR) Gateway

JSI or Logistics to close shipment in Oracle based on Ship From location

Task

Data objects: Ship From location details (JSI or Subcon)

Ship confirmation in Oracle

Task

Auto Invoice Interface

Task

Run Auto Invoice Concurrent Program

Task

Completed?

Data-based Exclusive (XOR) Gateway

Review & Correct errors

Task

Invoice created

Task

Invoice Auto email to customers or send thru EDI

Task

Upload to customer portal (AR Analyst)

Task

End Event

End Event

CS/Sales to log request in Sharepoint

Task

Data objects: Required info: - customer name & bill to# - reason for credit -amount - supporting docs/details

CS/Sales Manager approval

Task

Route for AR Analyst for review

Task

COMPLETE?

Data-based Exclusive (XOR) Gateway

Add GL entry

Task

Finance Approval

Task

APPROVE?

Data-based Exclusive (XOR) Gateway

Return to AR Analyst

Task

Create CN in Oracle

Collapsed Subprocess

Data objects: Credit Note

Inform requestor

Task

End Event

End Event

Return to Requestor

Task

AR Analyst to log Request in Sharepoint

Task

Data objects: Required info: - customer name & bill to # - reason for credit - amount - supporting docs/details

Add GL Entry

Task

Finance approval

Task

APPROVE?

Data-based Exclusive (XOR) Gateway

Create CN in Oracle

Collapsed Subprocess

Data objects: Credit Note

Send to customer

Task

End Event

End Event

Return to AR Analyst

Task

Data / IT-Systems

Credit Note

Data Object

Credit Note

Data Object

Required info: - customer name & bill to # - reason for credit - amount - supporting docs/details

Data Object

Required info: - customer name & bill to# - reason for credit -amount -supporting docs/details

Data Object

Ship From location details (JSI or Subcon)

Data Object

51 4.8.1 LLC Royalty Invoicing

Diagram Type	Business Process Diagram (BPMN 2.0)
Path	Shared documents / Sub-Processes (L2) / Level 3 sub-processes
Author	Amber Barber
Revision Number	2
Last modified	Apr 28, 2016
Diagram Link	https://editor.signavio.com/p/editor?id=26ce6d675419410ea1b4f5eb4b52c35e

51.1 Diagram

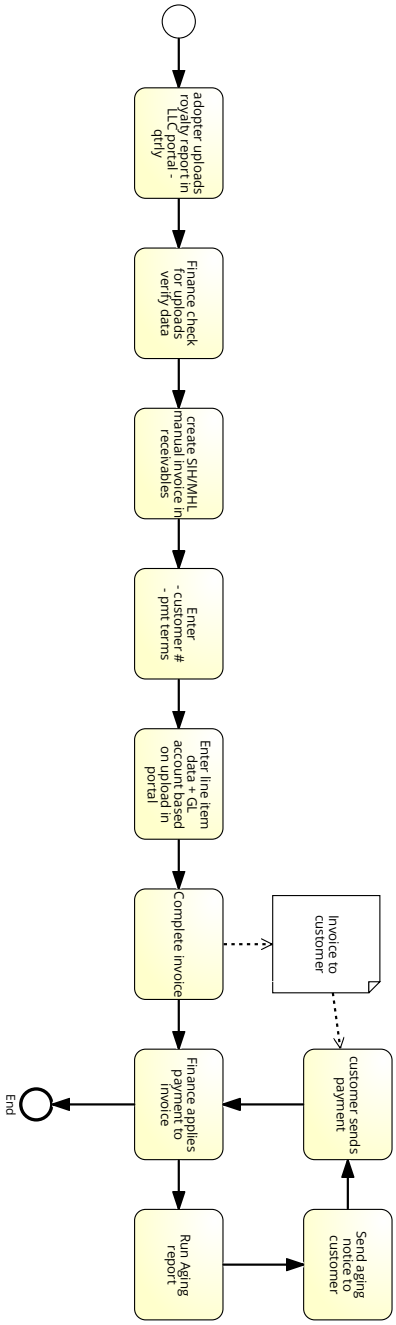

51.2 Description

Team Approved

51.3 Elements

Process elements

Start Event

Start Event

adopter uploads royalty report in LLC portal - qtrly

Task

Finance check for uploads verify data

Task

create SIH/MHL manual invoice in receivables

Task

Enter - customer # - pmt terms

Task

Enter line item data + GL account based on upload in portal

Task

Complete invoice

Task

Data objects: Invoice to customer

Finance applies payment to invoice

Task

Run Aging report

Task

Send aging notice to customer

Task

customer sends payment

Task

Data objects: Invoice to customer

End

End Event

Data / IT-Systems

Invoice to customer

Data Object

52 4.8.1 Manual/Cash Receipts

Diagram Type	Business Process Diagram (BPMN 2.0)
Path	Shared documents / Sub-Processes (L2) / Level 3 sub-processes

Author	Amber Barber
Revision Number	6
Last modified	Jun 1, 2016
Diagram Link	https://editor.signavio.com/p/editor?id=8783c66a68254b808663f471061a483a

52.1 Diagram

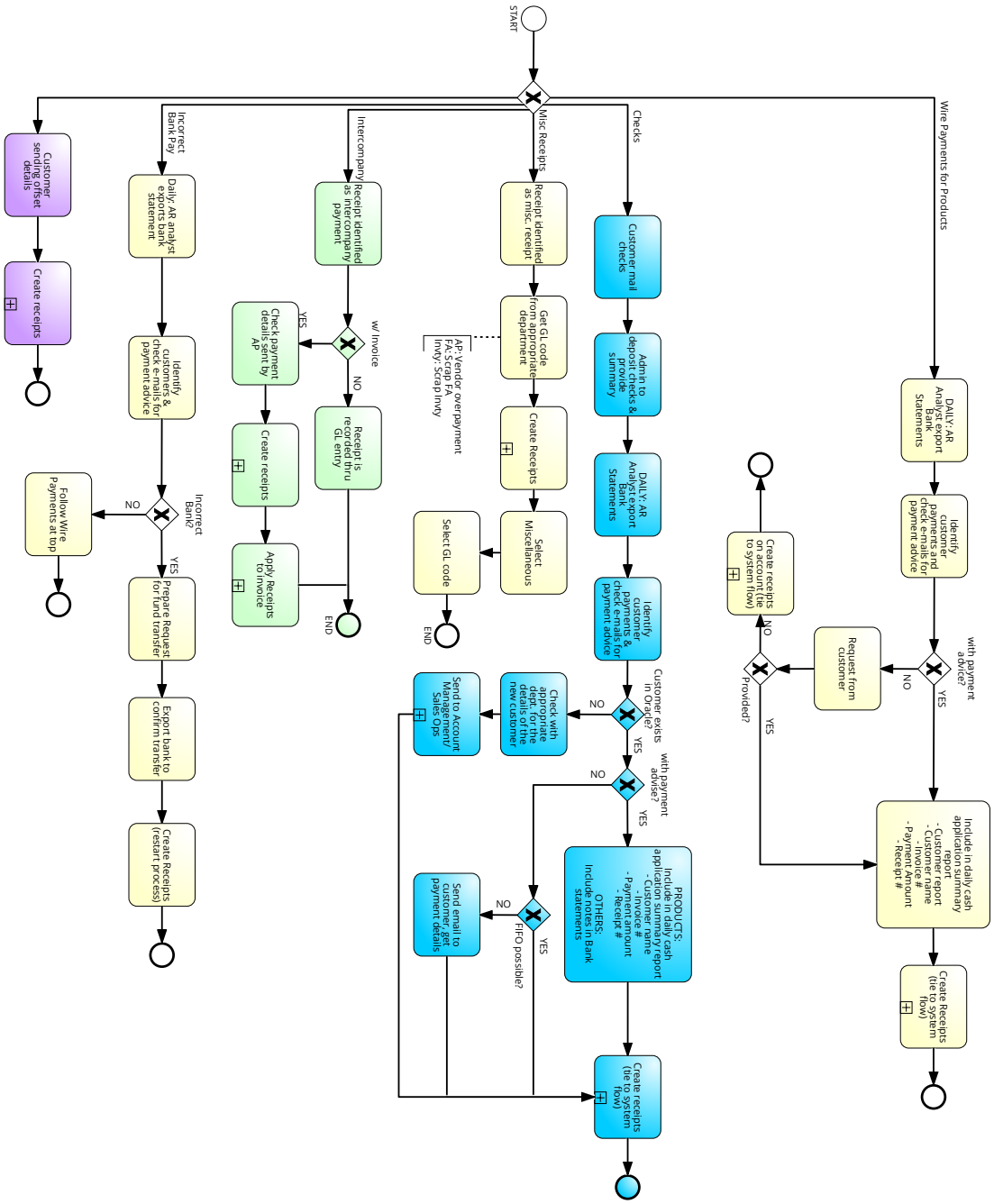

52.2 Description

Team Approved

52.3 Elements

Process elements

START

Start Event

Data-based Exclusive (XOR) Gateway

Data-based Exclusive (XOR) Gateway

DAILY: AR Analyst export Bank Statements

Task

Identify customer payments and check e-mails for payment advice

Task

with payment advice?

Data-based Exclusive (XOR) Gateway

Request from customer

Task

Provided?

Data-based Exclusive (XOR) Gateway

Include in daily cash application summary report - Customer report - Customer name - Invoice # - Payment Amount - Receipt #

Task

Create Receipts (tie to system flow)

Collapsed Subprocess

End Event

End Event

Create receipts on account (tie to system flow)

Collapsed Subprocess

End Event

End Event

Customer mail checks

Task

Admin to deposit checks & provide summary

Task

DAILY: AR Analyst export Bank Statements

Task

Identify customer payments & check e-mails for payment advice

Task

Customer exists in Oracle?

Data-based Exclusive (XOR) Gateway

with payment advise?

Data-based Exclusive (XOR) Gateway

PRODUCTS: Include in daily cash application summary report - Customer name - Invoice # - Payment amount - Receipt # OTHERS: Include notes in Bank statements

Task

FIFO possible?

Data-based Exclusive (XOR) Gateway

Send email to customer, get payment details

Task

Check with appropriate dept. for the details of the new customer

Task

Send to Account Management/ Sales Ops

Collapsed Subprocess

Create receipts (tie to system flow)

Collapsed Subprocess

End Event

End Event

Receipt identified as misc. receipt

Task

Get GL code from appropriate department

Task

Create Receipts

Collapsed Subprocess

Select Miscellaneous

Task

Select GL code

Task

END

End Event

Receipt identified as intercompany payment

Task

w/ Invoice

Data-based Exclusive (XOR) Gateway

Receipt is recorded thru GL entry

Task

Check payment details sent by AP

Task

Create receipts

Collapsed Subprocess

Apply Receipts to invoice

Collapsed Subprocess

END

End Event

Daily: AR analyst exports bank statement

Task

Identify customers & check e-mails for payment advice

Task

Incorrect Bank?

Data-based Exclusive (XOR) Gateway

Prepare Request for fund transfer

Task

Export bank to confirm transfer

Task

Create Receipts (restart process)

Task

End Event

End Event

Follow Wire Payments at top

Task

End Event

End Event

Customer sending offset details

Task

Create receipts

Collapsed Subprocess

End Event

End Event

53 4.20.30 Order Picking Process

Diagram Type	Business Process Diagram (BPMN 2.0)
Path	Shared documents / Sub-Processes (L2) / Level 3 sub-processes
Author	Amber Barber

Revision Number	3
Last modified	May 26, 2016
Diagram Link	https://editor.signavio.com/p/editor?id=d1da4fb80faf45e3a58bc2dd964ac986

53.1 Diagram

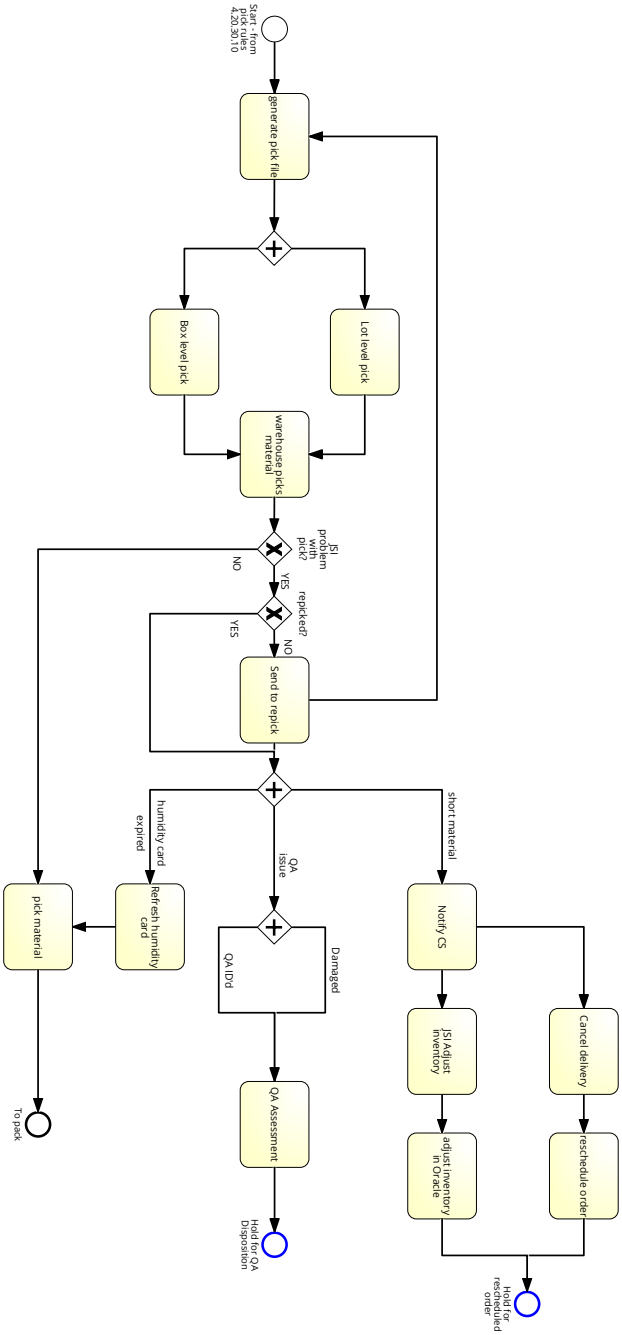

53.2 Description

Team Approved
Application of picking rules, picking of material for shipment

53.3 Elements

Process elements

Start - from pick rules 4.20.30.10

Start Event

generate pick file

Task

Parallel Gateway

Parallel Gateway

Lot level pick

Task

Box level pick

Task

warehouse picks material

Task

JSI problem with pick?

Data-based Exclusive (XOR) Gateway

repicked?

Data-based Exclusive (XOR) Gateway

Send to repick

Task

Parallel Gateway

Parallel Gateway

Refresh humidity card

Task

Notify CS

Task

Cancel delivery

Task

reschedule order

Task

JSI Adjust inventory

Task

adjust inventory in Oracle

Task

Hold for rescheduled order

End Event

QA issue

Parallel Gateway

QA Assessment

Task

Hold for QA Disposition

End Event

pick material

Task

To pack

End Event

54 4.20.30.10 Order Picking Rules

Diagram Type	Business Process Diagram (BPMN 2.0)
Path	Shared documents / Sub-Processes (L2) / Level 3 sub-processes
Author	Amber Barber
Revision Number	4
Last modified	May 26, 2016
Diagram Link	https://editor.signavio.com/p/editor?id=b73e024203954b3eb2016b14bbb195f1

54.1 Diagram

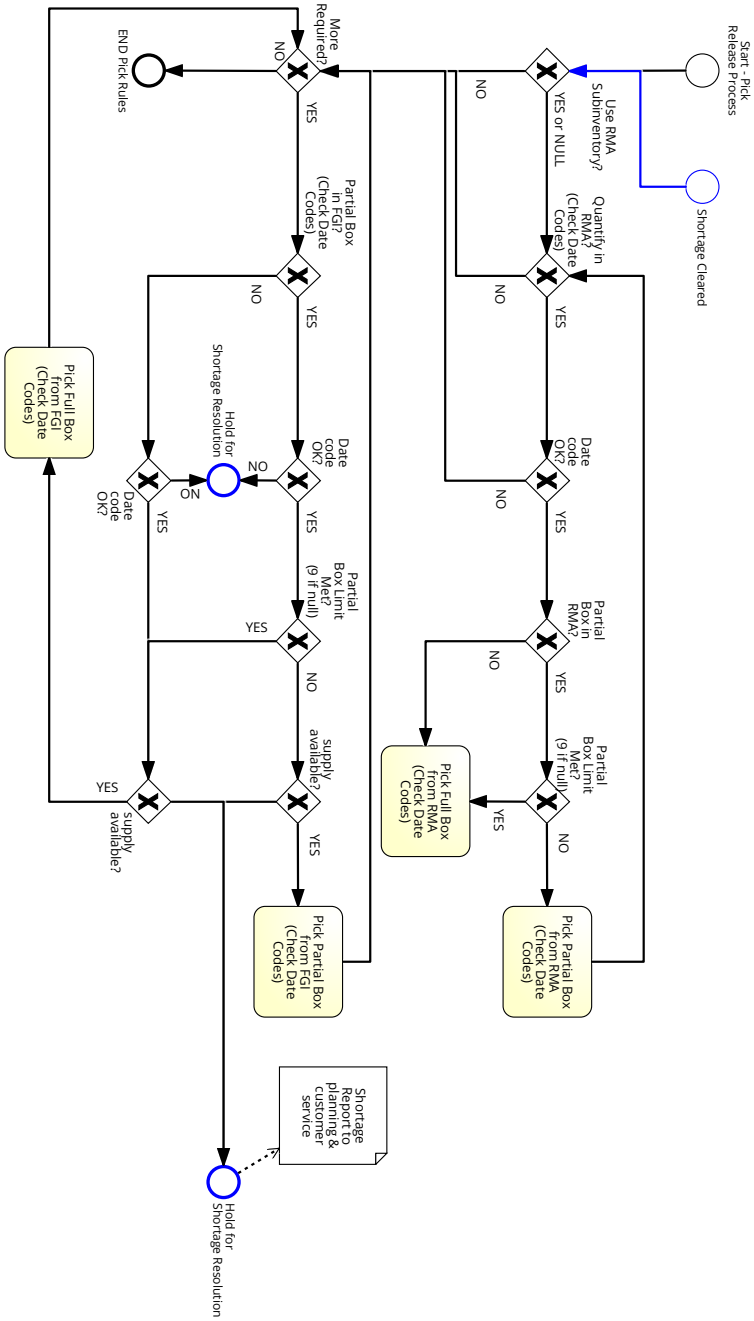

54.2 Description

Team Approved
Rules for picking of material to ship.

54.3 Elements

Process elements

Start - Pick Release Process

Start Event

Shortage Cleared

Start Event

Use RMA Subinventory?

Data-based Exclusive (XOR) Gateway

Quantify in RMA? (Check Date Codes)

Data-based Exclusive (XOR) Gateway

Date code OK?

Data-based Exclusive (XOR) Gateway

Partial Box in RMA?

Data-based Exclusive (XOR) Gateway

Partial Box Limit Met? (9 if null)

Data-based Exclusive (XOR) Gateway

Pick Partial Box from RMA (Check Date Codes)

Task

Pick Full Box from RMA (Check Date Codes)

Task

More Required?

Data-based Exclusive (XOR) Gateway

END Pick Rules

End Event

Partial Box in FGI? (Check Date Codes)

Data-based Exclusive (XOR) Gateway

Date code OK?

Data-based Exclusive (XOR) Gateway

Partial Box Limit Met? (9 if null)

Data-based Exclusive (XOR) Gateway

supply available?

Data-based Exclusive (XOR) Gateway

Pick Partial Box from FGI (Check Date Codes)

Task

Date code OK?

Data-based Exclusive (XOR) Gateway

Hold for Shortage Resolution

End Event

supply available?

Data-based Exclusive (XOR) Gateway

Pick Full Box from FGI (Check Date Codes)

Task

Hold for Shortage Resolution

End Event

Data objects: Shortage Report to planning & customer service

Data / IT-Systems

Shortage Report to planning & customer service

Data Object

55 4.20.40 Order Packing Process

Diagram Type	Business Process Diagram (BPMN 2.0)
Path	Shared documents / Sub-Processes (L2) / Level 3 sub-processes
Author	Amber Barber
Revision Number	3
Last modified	May 26, 2016
Diagram Link	https://editor.signavio.com/p/editor?id=36de1126108140c4952db2edf3e1d70f

55.1 Diagram

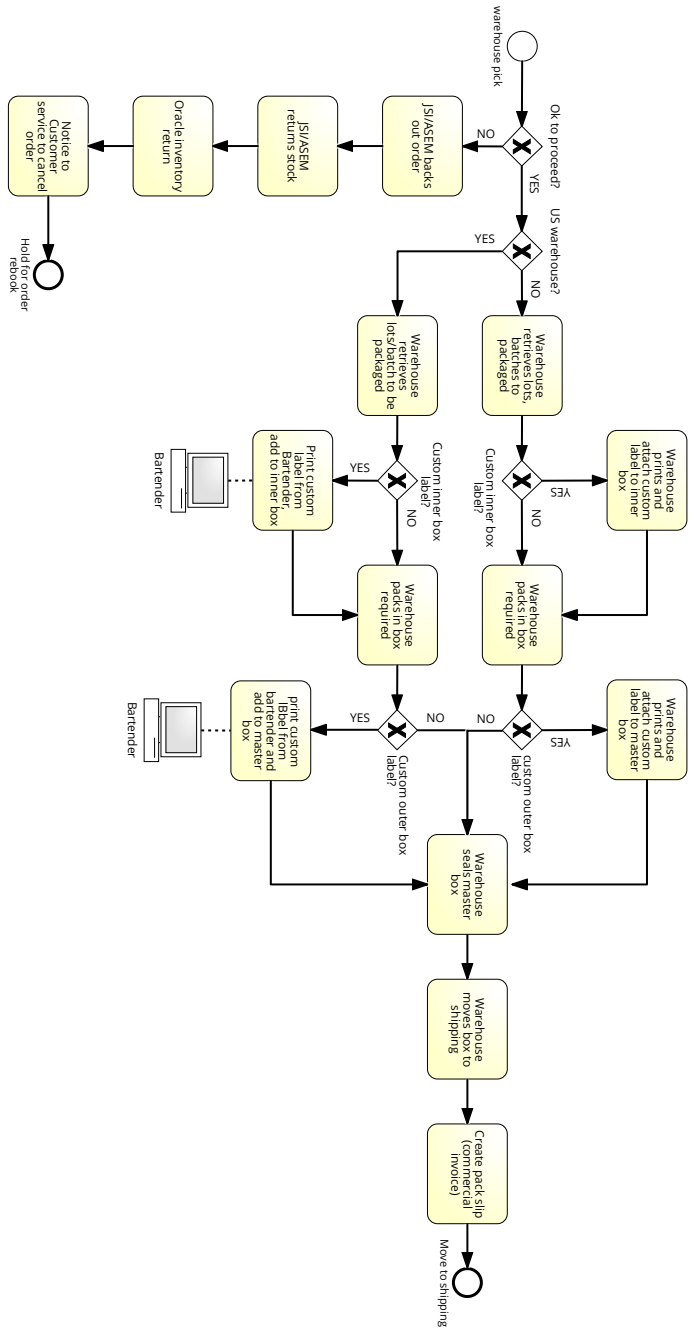

55.2 Description

Team Approved
Packing of material for shipment from US or JSI warehouses

55.3 Elements

Process elements

warehouse pick

Start Event

Ok to proceed?

Data-based Exclusive (XOR) Gateway

US warehouse?

Data-based Exclusive (XOR) Gateway

Warehouse retrieves lots, batches to packaged

Task

Custom inner box label?

Data-based Exclusive (XOR) Gateway

Warehouse prints and attach custom label to inner box

Task

Warehouse packs in box required

Task

custom outer box label?

Data-based Exclusive (XOR) Gateway

Warehouse prints and attach custom label to master box

Task

Warehouse retrieves lots/batch to be packaged

Task

Custom inner box label?

Data-based Exclusive (XOR) Gateway

Print custom label from Bartender, add to inner box

Task

IT Systems: Bartender

Warehouse packs in box required

Task

Custom outer box label?

Data-based Exclusive (XOR) Gateway

print custom lBbel from bartender and add to master box

Task

IT Systems: Bartender

Warehouse seals master box

Task

Warehouse moves box to shipping

Task

Create pack slip (commercial invoice)

Task

Move to shipping

End Event

JSI/ASEM backs out order

Task

JSI/ASEM returns stock

Task

Oracle inventory return

Task

Notice to Customer service to cancel order

Task

Hold for order rebook

End Event

Data / IT-Systems

Bartender

IT System

Label printing for US warehouse

Dictionary entries: Bartender : Label printing for US warehouse

55.4 Linked dictionary entries

Bartender

Label printing for US warehouse

56 4.20.60 Order Shipping Process

Diagram Type	Business Process Diagram (BPMN 2.0)
Path	Shared documents / Sub-Processes (L2) / Level 3 sub-processes
Author	Amber Barber
Revision Number	3
Last modified	May 26, 2016
Diagram Link	https://editor.signavio.com/p/editor?id=b6c5e95f86e647bbaf1ba605b090f868

56.1 Diagram

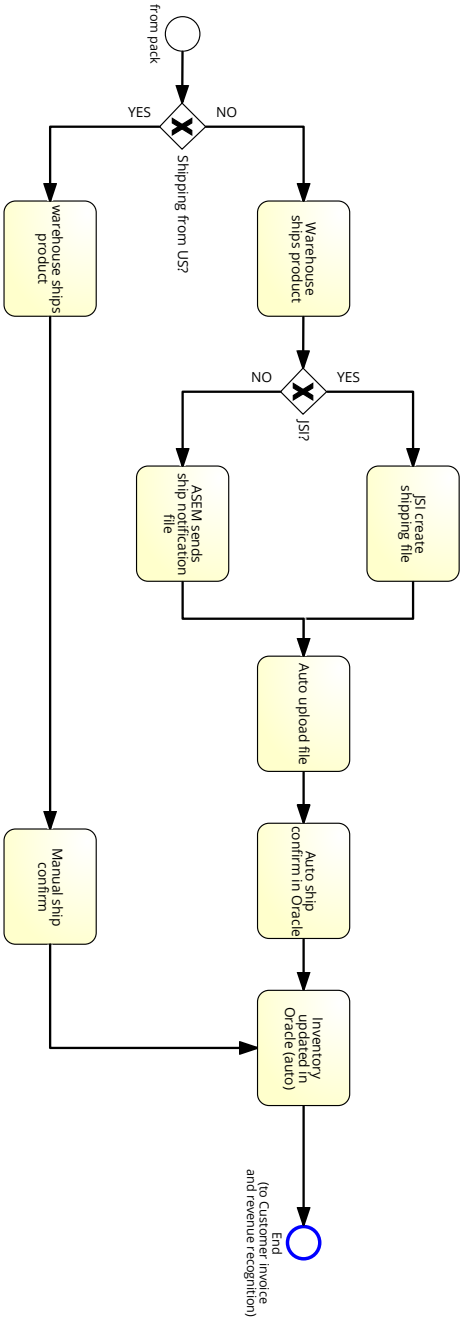

56.2 Description

Team Approved
Order shipping from US or JSI warehouse

56.3 Elements

Process elements

from pack

Start Event

Shipping from US?

Data-based Exclusive (XOR) Gateway

Warehouse ships product

Task

JSI?

Data-based Exclusive (XOR) Gateway

JSI create shipping file

Task

ASEM sends ship notification file

Task

Auto upload file

Task

Auto ship confirm in Oracle

Task

warehouse ships product

Task

Manual ship confirm

Task

Inventory updated in Oracle (auto)

Task

End (to Customer invoice and revenue recognition)

End Event

57 4.20.60 Shipping - Drop ship from subcon to customer

Diagram Type	Business Process Diagram (BPMN 2.0)
Path	Shared documents / Sub-Processes (L2) / Level 3 sub-processes
Author	Amber Barber
Revision Number	3
Last modified	May 26, 2016
Diagram Link	https://editor.signavio.com/p/editor?id=24539a0287af42b2b7197f22f8d01be5

57.1 Diagram

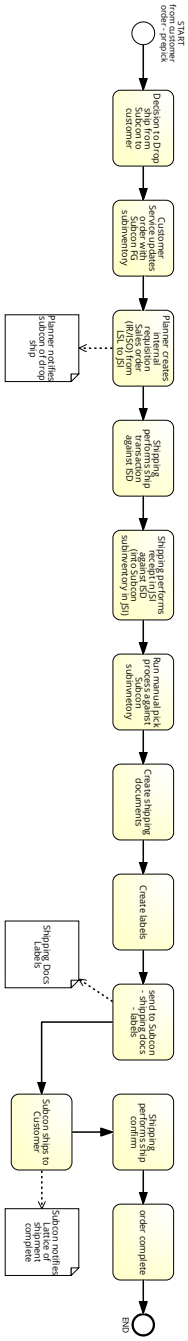

57.2 Description

Team Approved
Material drop-shipment process - orders not from a warehouse

57.3 Elements

Process elements

START from customer order - prepick

Start Event

Decision to Drop ship from Subcon to customer

Task

Customer Service updates order with Subcon FG subinventory

Task

Planner creates internal requisition Sales order (IR/ISO) from LSL to JSI

Task

Data objects: Planner notifies subcon of drop ship

Shipping performs ship transaction against ISD

Task

Shipping performs receipt in JSI against ISD (into Subcon subinventory in JSI)

Task

Run manual pick process against Subcon subinvnetory

Task

Create shipping documents

Task

Create labels

Task

send to Subcon - shipping docs - labels

Task

Data objects: Shipping Docs Labels

Subcon ships to Customer

Task

Data objects: Subcon notifies Lattice of shipment complete

Shipping performs ship confirm

Task

order complete

Task

END

End Event

Data / IT-Systems

Planner notifies subcon of drop ship

Data Object

Shipping Docs Labels

Data Object

Subcon notifies Lattice of shipment complete

Data Object

58 5.1.1 finance cash management

Diagram Type	Business Process Diagram (BPMN 2.0)
Path	Shared documents / Sub-Processes (L2) / Level 3 sub-processes
Author	Amber Barber
Revision Number	3
Last modified	Mar 31, 2016
Diagram Link	https://editor.signavio.com/p/editor?id=7da4dd0bcea044c48333a33fda810d39

58.1 Diagram

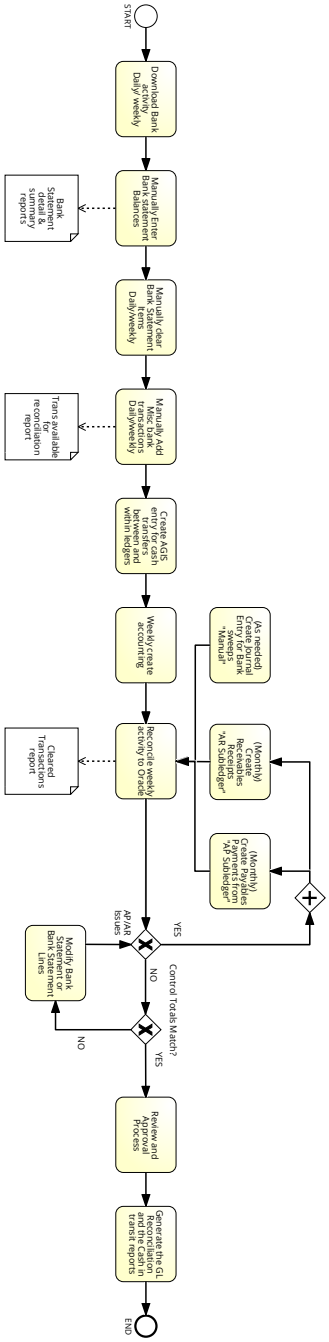

58.2 Description

Team Approved

58.3 Elements

Process elements

START

Start Event

Download Bank activity Daily/ weekly

Task

Manually Enter Bank statement Balances

Task

Data objects: Bank Statement detail & summary reports

Manually clear Bank Statement Items Daily/weekly

Task

Manually Add Misc bank transactions Daily/weekly

Task

Data objects: Trans available for reconciliation report

Create AGIS entry for cash transfers between and within ledgers

Task

Weekly create accounting

Task

Reconcile weekly activity to Oracle

Task

Data objects: Cleared Transactions report

AP/AR Issues

Data-based Exclusive (XOR) Gateway

Control Totals Match?

Data-based Exclusive (XOR) Gateway

Review and Approval Process

Task

Generate the GL Reconciliation and the Cash in transit reports

Task

END

End Event

Modify Bank Statement or Bank Statement Lines

Task

Parallel Gateway

Parallel Gateway

(Monthly) Create Payables Payments from "AP Subledger"

Task

(Monthly) Create Receivables Receipts "AR Subledger"

Task

(As needed) Create Journal Entry for Bank sweeps "Manual"

Task

Data / IT-Systems

Bank Statement detail & summary reports

Data Object

Cleared Transactions report

Data Object

Trans available for reconciliation report

Data Object

59 5.1.3 Fixed Asset

Diagram Type	Business Process Diagram (BPMN 2.0)
Path	Shared documents / Sub-Processes (L2) / Level 3 sub-processes
Author	Amber Barber
Revision Number	3
Last modified	Apr 2, 2016
Diagram Link	https://editor.signavio.com/p/editor?id=16c51e9218ec4f178a3bbfb2334ed1a6

59.1 Diagram

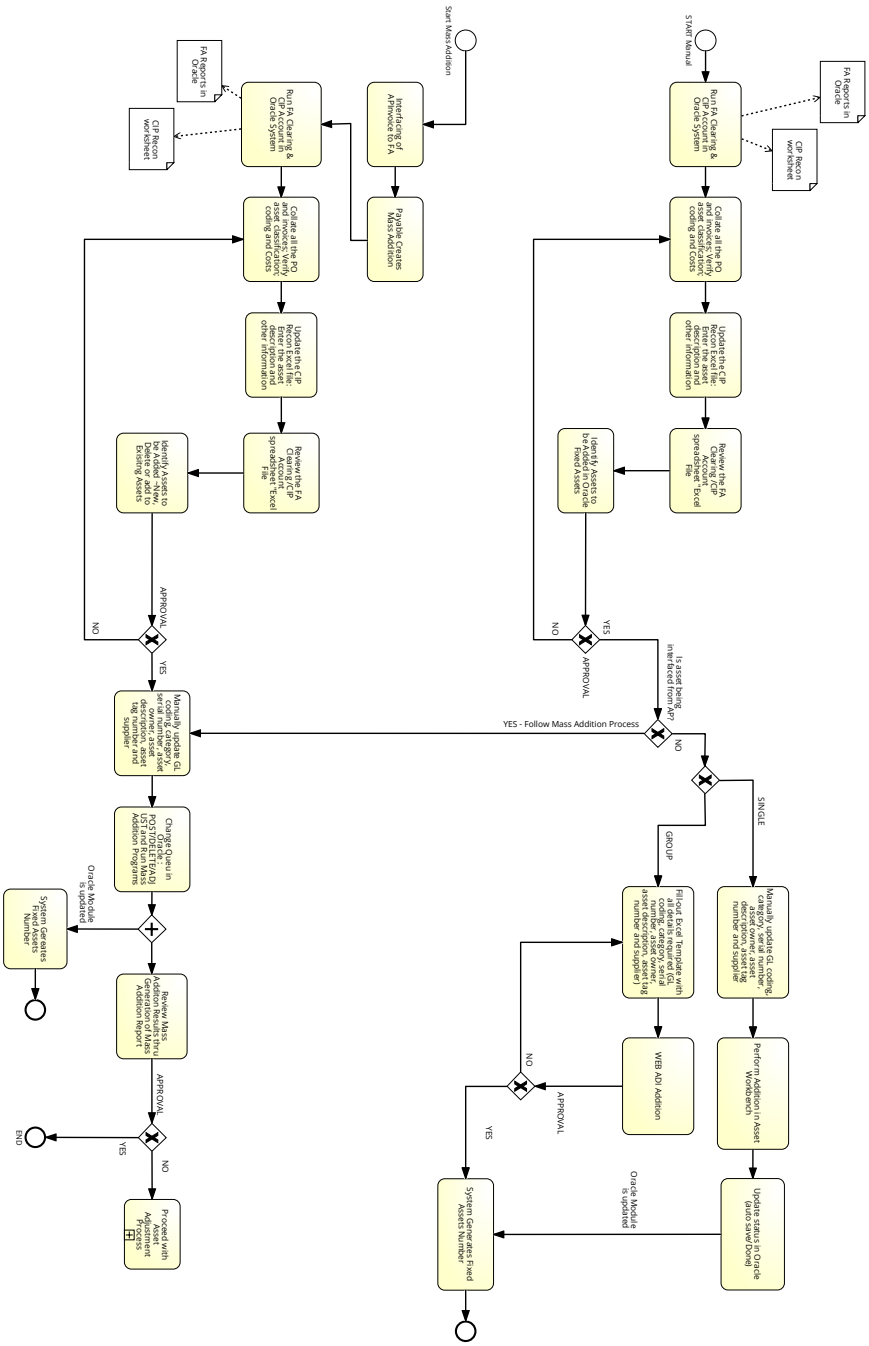

59.2 Description

Team Approved

59.3 Elements

Process elements

START Manual

Start Event

Run FA Clearing & CIP Account in Oracle System

Task

Data objects:

FA Reports in Oracle

CIP Recon worksheet

Collate all the PO and invoices; Verify asset classification; coding and Costs

Task

Update the CIP Recon Excel file: Enter the asset description and other information

Task

Review the FA Clearing /CIP Account spreadsheet "Excel File

Task

Identify Assets to be Added in Oracle Fixed Assets

Task

APPROVAL

Data-based Exclusive (XOR) Gateway

Is asset being interfaced from AP?

Data-based Exclusive (XOR) Gateway

Data-based Exclusive (XOR) Gateway

Data-based Exclusive (XOR) Gateway

Manually update GL coding, category, serial number, asset owner, asset description, asset tag number and supplier

Task

Perform Addition in Asset Workbench

Task

Update status in Oracle (auto save/Done)

Task

Fill-out Excel Template with all details required (GL coding, category, serial number, asset owner, asset description, asset tag number and supplier)

Task

WEB ADI Addition

Task

APPROVAL

Data-based Exclusive (XOR) Gateway

System Generates Fixed Assets Number

Task

End Event

End Event

Start Mass Addition

Start Event

Interfacing of APInvoice to FA

Task

Payable Creates Mass Addition

Task

Run FA Clearing & CIP Account in Oracle System

Task

Data objects:

FA Reports in Oracle

CIP Recon worksheet

Collate all the PO and invoices; Verify asset classification; coding and Costs

Task

Update the CIP Recon Excel file: Enter the asset description and other information

Task

Review the FA Clearing /CIP Account spreadsheet "Excel File

Task

Identify Assets to be Added ~New, Delete or add to Exisitng Assets

Task

APPROVAL

Data-based Exclusive (XOR) Gateway

Manually update GL coding, category, serial number, asset owner, asset description, asset tag number and supplier

Task

Change Queu in Oracle : POST/DELETE/ADJUST and Run Mass Addition Programs

Task

Parallel Gateway

Parallel Gateway

Review Mass Additon Results thru Generation of Mass Addition Report

Task

APPROVAL

Data-based Exclusive (XOR) Gateway

Proceed with Asset Adjustment Process

Collapsed Subprocess

END

End Event

System Gereates Fixed Assets Number

Task

End Event

End Event

Data / IT-Systems

CIP Recon worksheet

Data Object

CIP Recon worksheet

Data Object

FA Reports in Oracle

Data Object

FA Reports in Oracle

Data Object

60 5.1.4 Finance Job Closure Variance Review

Diagram Type	Business Process Diagram (BPMN 2.0)
Path	Shared documents / Sub-Processes (L2) / Level 3 sub-processes
Author	Amber Barber
Revision Number	2
Last modified	Apr 27, 2016
Diagram Link	https://editor.signavio.com/p/editor?id=1f6cc187a6d04969b1abd5e6cea20045

60.1 Diagram

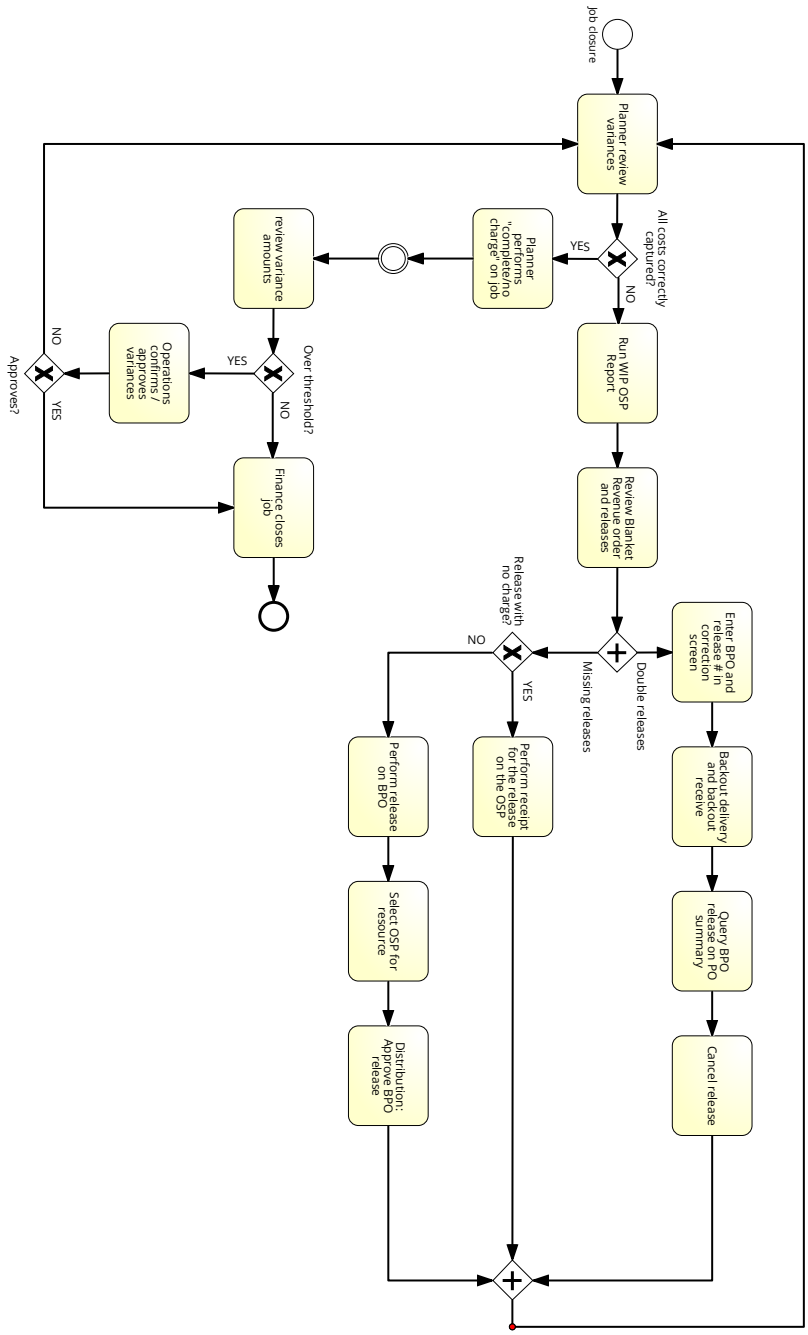

60.2 Description

Team Approved

60.3 Elements

Process elements

Job closure

Start Event

Planner review variances

Task

All costs correctly captured?

Data-based Exclusive (XOR) Gateway

Run WIP OSP Report

Task

Review Blanket Revenue order and releases

Task

Double releases

Parallel Gateway

Enter BPO and release # in correction screen

Task

Backout delivery and backout receive

Task

Query BPO release on PO summary

Task

Cancel release

Task

Release with no charge?

Data-based Exclusive (XOR) Gateway

Perform receipt for the release on the OSP

Task

Perform release on BPO

Task

Select OSP for resource

Task

Distribution: Approve BPO release

Task

Parallel Gateway

Parallel Gateway

Planner performs "complete/no charge" on job

Task

Intermediate Event

Intermediate Event

review variance amounts

Task

Over threshold?

Data-based Exclusive (XOR) Gateway

Operations confirms / approves variances

Task

Approves?

Data-based Exclusive (XOR) Gateway

Finance closes job

Task

End Event

End Event

61 5.1.4 Inventory Reconciliation - monthly close

Diagram Type	Business Process Diagram (BPMN 2.0)
Path	Shared documents / Sub-Processes (L2) / Level 3 sub-processes
Author	Amber Barber
Revision Number	2
Last modified	May 2, 2016
Diagram Link	https://editor.signavio.com/p/editor?id=1ae70fc1e937455a96d10351dd63c1da

61.1 Diagram

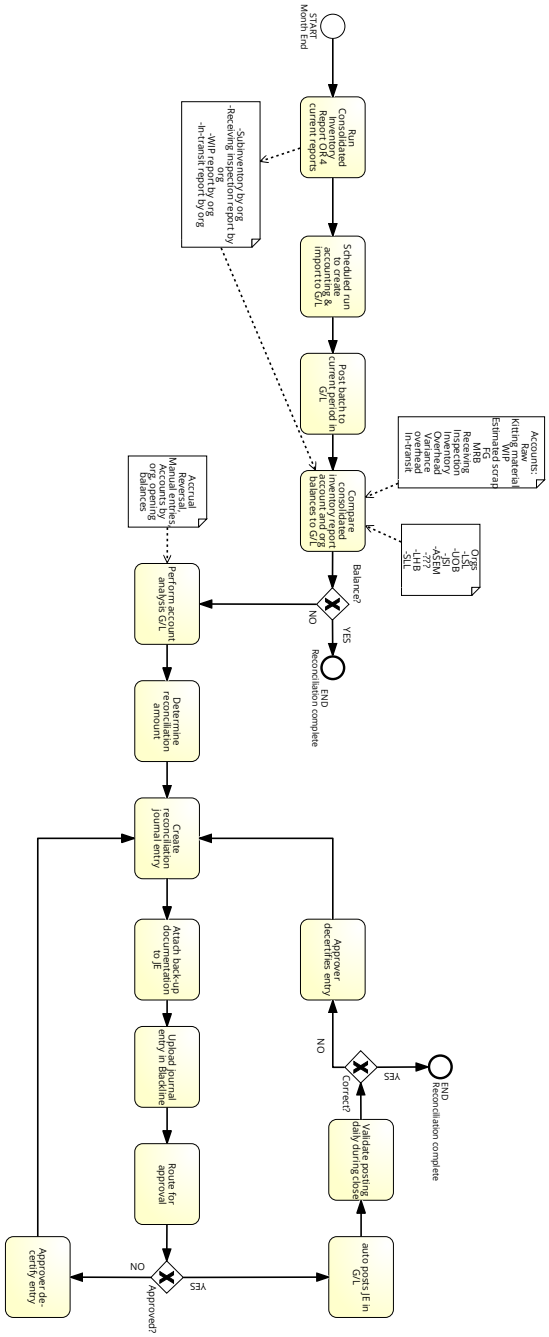

61.2 Description

Team Approved

61.3 Elements

Process elements

START Month End

Start Event

Run Consolidated Inventory Report OR 4 current reports

Task

Data objects: -Subinventory by org -Receiving inspection report by org -WIP report by org -In-transit report by org

Scheduled run to create accounting & import to G/L

Task

Post batch to current period in G/L

Task

Compare consolidated inventory report account and org balances to G/L

Task

Data objects:

Accounts: Raw Kitting material WIP Estimated scrap FG MRB Receiving Inspection Inventory Overhead Variance overhead In-transit

-Subinventory by org -Receiving inspection report by org -WIP report by org -In-transit report by org

Orgs -LSL -UOB -JSI -ASEM -??? -LHB -SLL

Balance?

Data-based Exclusive (XOR) Gateway

END Reconciliation complete

End Event

Perform account analysis G/L

Task

Data objects: Accrual Reversal, Manual entries, Accounts by org, opening balances

Determine reconciliation amount

Task

Create reconciliation journal entry

Task

Attach back-up documentation to JE

Task

Upload journal entry in Blackline

Task

Route for approval

Task

Approved?

Data-based Exclusive (XOR) Gateway

auto posts JE in G/L

Task

Validate posting daily during close

Task

Correct?

Data-based Exclusive (XOR) Gateway

END Reconciliation complete

End Event

Approver decertifies entry

Task

Approver de-certify entry

Task

Data / IT-Systems

-Subinventory by org -Receiving inspection report by org -WIP report by org -In-transit report by org

Data Object

Accounts: Raw Kitting material WIP Estimated scrap FG MRB Receiving Inspection Inventory Overhead Variance overhead In-transit

Data Object

Accrual Reversal, Manual entries, Accounts by org, opening balances

Data Object

Orgs -LSL -UOB -JSI -ASEM -??? -LHB -SLL

Data Object

62 5.1.4 Variance Accounting

Diagram Type	Business Process Diagram (BPMN 2.0)
Path	Shared documents / Sub-Processes (L2) / Level 3 sub-processes
Author	Amber Barber
Revision Number	2
Last modified	Apr 26, 2016
Diagram Link	https://editor.signavio.com/p/editor?id=09a0ded5ff0c4689bbe93554955e0a2b

62.1 Diagram

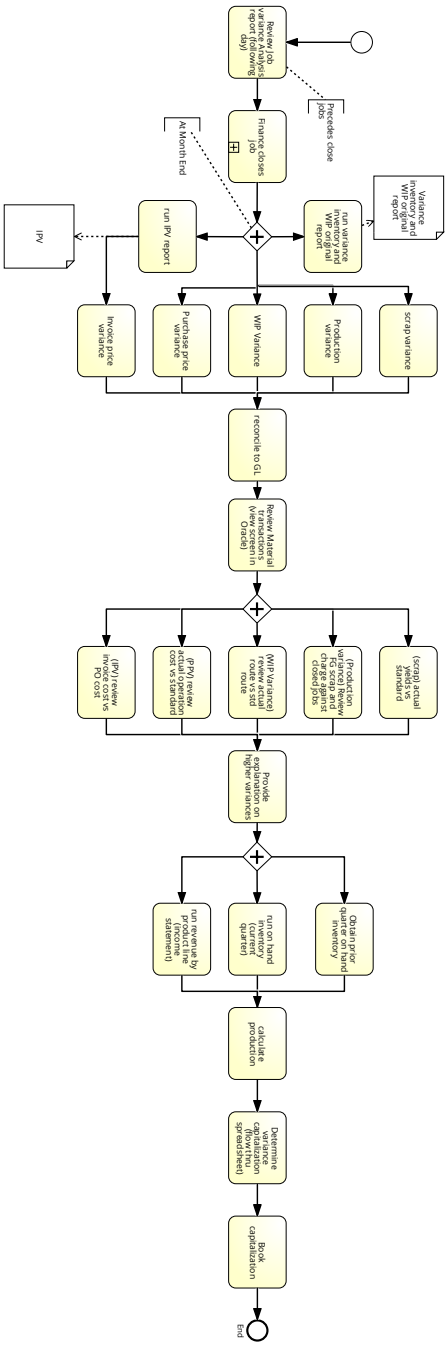

62.2 Description

Team Approved

62.3 Elements

Process elements

Start Event

Start Event

Review Job variance Analysis report (following day)

Task

Finance closes job

Collapsed Subprocess

Subprocess reference: 5.1.4 Finance Job Closure Variance Review (https://editor.signavio.com/p/model/1f6cc187a6d04969b1abd5e6cea20045)

Parallel Gateway

Parallel Gateway

run variance inventory and WIP original report

Task

Data objects: Variance inventory and WIP original report

WIP Variance

Task

run IPV report

Task

Data objects: IPV

Invoice price variance

Task

scrap variance

Task

Production variance

Task

Purchase price variance

Task

reconcile to GL

Task

Review Material transactions (view screen in Oracle)

Task

Parallel Gateway

Parallel Gateway

(scrap) actual yields vs standard

Task

(Production variance) Review FG scrap and charge against closed jobs

Task

(WIP Variance) review actual route vs std route

Task

(PPV) review actual operation cost vs standard

Task

(IPV) review invoice cost vs PO cost

Task

Provide explanation on higher variances

Task

Parallel Gateway

Parallel Gateway

Obtain prior quarter on hand inventory

Task

run on hand inventory (current quarter)

Task

run revenue by product line (income statement)

Task

calculate production

Task

Determine variance capitalization (flow thru spreadsheet)

Task

Book capitalization

Task

End

End Event

Data / IT-Systems

IPV

Data Object

Variance inventory and WIP original report

Data Object

63 5.1.4.1 Enter and Maintain Chart of Accounts

Diagram Type	Business Process Diagram (BPMN 2.0)
Path	Shared documents / Sub-Processes (L2) / Level 3 sub-processes
Author	Amber Barber
Revision Number	1

Last modified Apr 13, 2016

Diagram Link https://editor.signavio.com/p/editor?id=aa902bcd813743afb1ed139d9d5c830e

63.1 Diagram

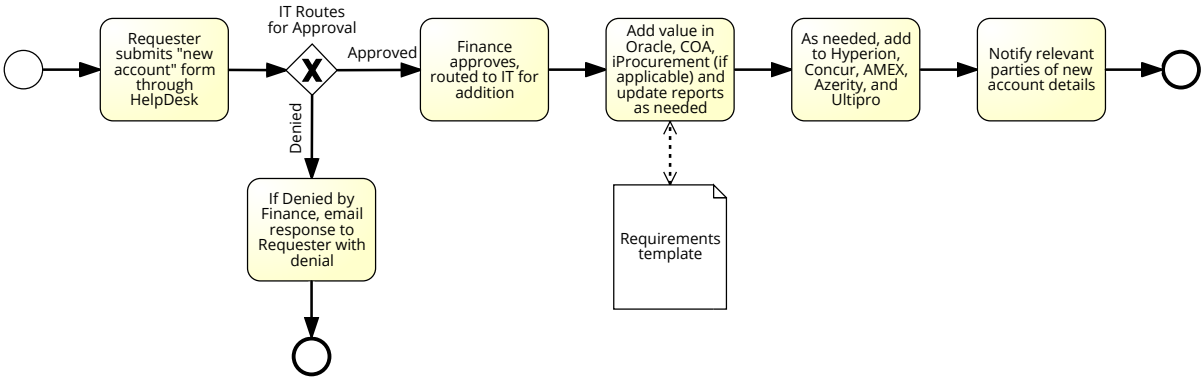

63.2 Description

Team Approved

63.3 Elements

Process elements

Start Event

Start Event

Requester submits "new account" form through HelpDesk

Task

IT Routes for Approval

Data-based Exclusive (XOR) Gateway

Finance approves, routed to IT for addition

Task

Add value in Oracle, COA, iProcurement (if applicable) and update reports as needed

Task

Data objects: Requirements template

As needed, add to Hyperion, Concur, AMEX, Azerity, and Ultipro

Task

Notify relevant parties of new account details

Task

End Event

End Event

If Denied by Finance, email response to Requester with denial

Task

End Event

End Event

Data / IT-Systems

Requirements template

Data Object

64 5.1.4.2 Journal Processing and Approvals

Diagram Type	Business Process Diagram (BPMN 2.0)
Path	Shared documents / Sub-Processes (L2) / Level 3 sub-processes
Author	Amber Barber
Revision Number	6
Last modified	Apr 13, 2016
Diagram Link	https://editor.signavio.com/p/editor?id=27b62e8abfd24d10a9c9659b52bb64c0

64.1 Diagram

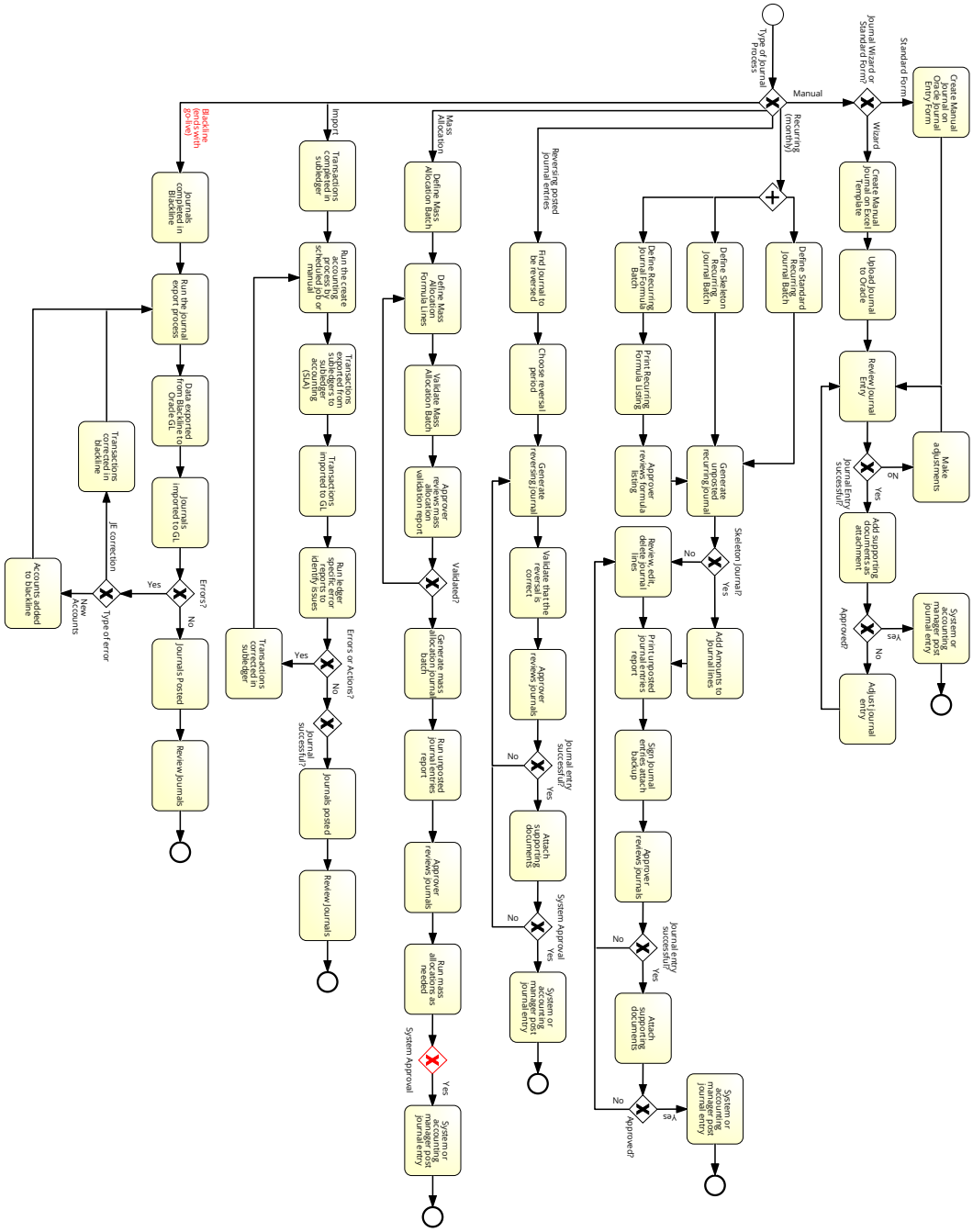

64.2 Description

Team Approved

64.3 Elements

Process elements

Start Event

Start Event

Type of Journal Process

Data-based Exclusive (XOR) Gateway

Journal Wizard or Standard Form?

Data-based Exclusive (XOR) Gateway

Create Manual Journal on Oracle Journal Entry Form

Task

Create Manual Journal on Excel Template

Task

Upload Journal to Oracle

Task

Review Journal Entry

Task

Journal Entry successful?

Data-based Exclusive (XOR) Gateway

Make adjustments

Task

Add supporting documents as attachment

Task

Approved?

Data-based Exclusive (XOR) Gateway

System or accounting manager post journal entry

Task

End Event

End Event

Adjust journal entry

Task

Parallel Gateway

Parallel Gateway

Define Standard Recurring Journal Batch

Task

Define Skeleton Recurring Journal Batch

Task

Define Recurring Journal Formula Batch

Task

Print Recurring Formula Listing

Task

Approver reviews formula listing

Task

Generate unposted recurring journal

Task

Skeleton Journal?

Data-based Exclusive (XOR) Gateway

Add Amounts to Journal lines

Task

Review, edit, delete journal lines

Task

Print unposted journal entries report

Task

Sign Journal entries attach backup

Task

Approver reviews journals

Task

Journal entry successful?

Data-based Exclusive (XOR) Gateway

Attach supporting documents

Task

Approved?

Data-based Exclusive (XOR) Gateway

System or accounting manager post journal entry

Task

End Event

End Event

Find Journal to be reversed

Task

Choose reversal period

Task

Generate reversing journal

Task

Validate that the reversal is correct

Task

Approver reviews journals

Task

Journal entry successful?

Data-based Exclusive (XOR) Gateway

Attach supporting documents

Task

System Approval

Data-based Exclusive (XOR) Gateway

System or accounting manager post journal entry

Task

End Event

End Event

Define Mass Allocation Batch

Task

Define Mass Allocation Formula Lines

Task

Validate Mass Allocation Batch

Task

Approver reviews mass allocation validation report

Task

Validated?

Data-based Exclusive (XOR) Gateway

Generate mass allocation journal batch

Task

Run unposted journal entries report

Task

Approver reviews journals

Task

Run mass allocations as needed

Task

Transactions completed in subledger

Task

Journals completed in Blackline

Task

Run the create accounting process by scheduled job or manual

Task

Run the journal export process

Task

Transactions exported from subledgers to subledger accounting (SLA)

Task

Data exported from Blackline to Oracle GL

Task

Transactions corrected in blackline

Task

Transactions imported to GL

Task

Journals imported to GL

Task

Run ledger specific error reports to identify issues

Task

Accounts added to blackline

Task

Errors?

Data-based Exclusive (XOR) Gateway

Type of error

Data-based Exclusive (XOR) Gateway

Transactions corrected in subledger

Task

Journals Posted

Task

Errors or Actions?

Data-based Exclusive (XOR) Gateway

Journal successful?

Data-based Exclusive (XOR) Gateway

Review Journals

Task

Journals posted

Task

End Event

End Event

Review Journals

Task

End Event

End Event

System Approval

Data-based Exclusive (XOR) Gateway

System or accounting manager post journal entry

Task

End Event

End Event

65 5.1.4.3 Journal Posting

Diagram Type	Business Process Diagram (BPMN 2.0)
Path	Shared documents / Sub-Processes (L2) / Level 3 sub-processes
Author	Amber Barber
Revision Number	1
Last modified	Apr 14, 2016
Diagram Link	https://editor.signavio.com/p/editor?id=4002dc967258477e90fe3ab8df3b350e

65.1 Diagram

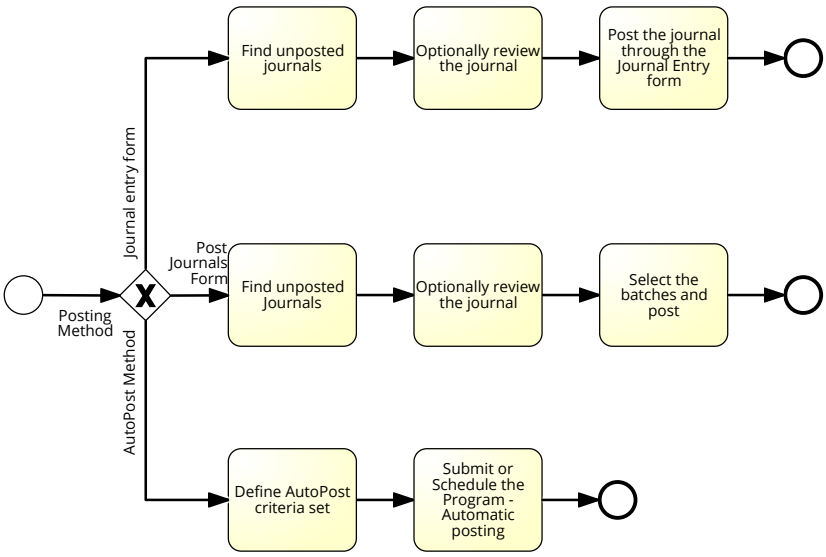

65.2 Description

Team Approved

65.3 Elements

Process elements

Start Event

Start Event

Posting Method

Data-based Exclusive (XOR) Gateway

Find unposted journals

Task

Optionally review the journal

Task

Post the journal through the Journal Entry form

Task

End Event

End Event

Find unposted Journals

Task

Optionally review the journal

Task

Select the batches and post

Task

End Event

End Event

Define AutoPost criteria set

Task

Submit or Schedule the Program - Automatic posting

Task

End Event

End Event

66 5.1.4.4 General Ledger Inquires

Diagram Type	Business Process Diagram (BPMN 2.0)
Path	Shared documents / Sub-Processes (L2) / Level 3 sub-processes
Author	Amber Barber
Revision Number	2
Last modified	Apr 14, 2016
Diagram Link	https://editor.signavio.com/p/editor?id=e8c9c113abf34e7c90f4099487bd6d2c

66.1 Diagram

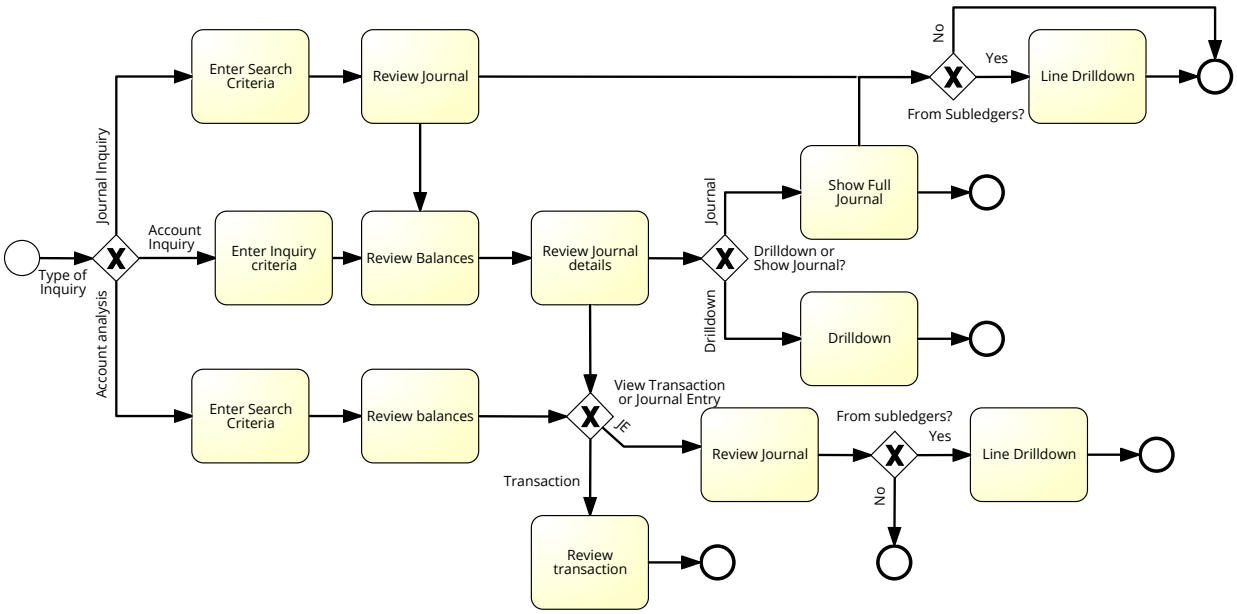

66.2 Description

Team Approved

66.3 Elements

Process elements

Start Event

Start Event

Type of Inquiry

Data-based Exclusive (XOR) Gateway

Enter Search Criteria

Task

Review Journal

Task

Enter Inquiry criteria

Task

Review Balances

Task

Review Journal details

Task

Drilldown or Show Journal?

Data-based Exclusive (XOR) Gateway

Show Full Journal

Task

From Subledgers?

Data-based Exclusive (XOR) Gateway

Line Drilldown

Task

End Event

End Event

End Event

End Event

Drilldown

Task

End Event

End Event

Enter Search Criteria

Task

Review balances

Task

View Transaction or Journal Entry

Data-based Exclusive (XOR) Gateway

Review transaction

Task

End Event

End Event

Review Journal

Task

From subledgers?

Data-based Exclusive (XOR) Gateway

Line Drilldown

Task

End Event

End Event

End Event

End Event

67 5.1.4.5 Currency Rates and Revaluation/ Translation

Diagram Type	Business Process Diagram (BPMN 2.0)
Path	Shared documents / Sub-Processes (L2) / Level 3 sub-processes
Author	Amber Barber
Revision Number	2
Last modified	Apr 14, 2016
Diagram Link	https://editor.signavio.com/p/editor?id=146d05792d6e4455885f0c8a2f3f995c

67.1 Diagram

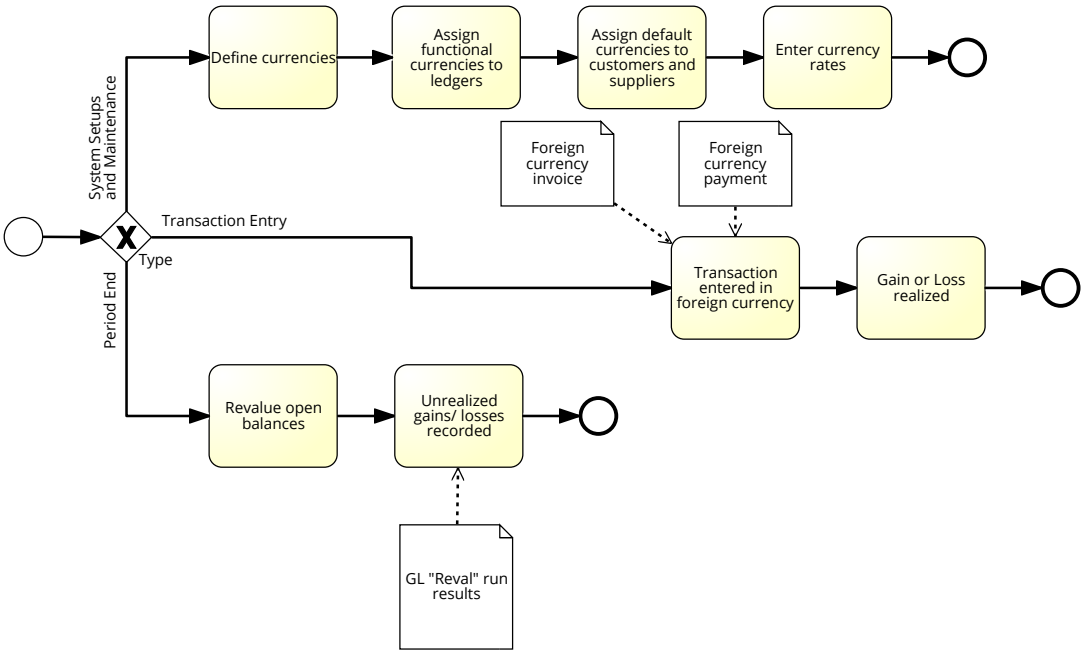

67.2 Description

Team Approved

67.3 Elements

Process elements

Start Event

Start Event

Type

Data-based Exclusive (XOR) Gateway

Define currencies

Task

Assign functional currencies to ledgers

Task

Assign default currencies to customers and suppliers

Task

Enter currency rates

Task

End Event

End Event

Transaction entered in foreign currency

Task

Data objects:

- Foreign currency payment
- Foreign currency invoice

Gain or Loss realized

Task

End Event

End Event

Revalue open balances

Task

Unrealized gains/ losses recorded

Task

Data objects: GL "Reval" run results

End Event

End Event

Data / IT-Systems

Foreign currency invoice

Data Object

Foreign currency payment

Data Object

GL "Reval" run results

Data Object

68 Account Management (L3)

Diagram Type	Business Process Diagram (BPMN 2.0)
Path	Shared documents / Sub-Processes (L2) / Level 3 sub-processes
Author	Amber Barber
Revision Number	13
Last modified	May 18, 2016
Diagram Link	https://editor.signavio.com/p/editor?id=6ab501fd19734dc48c8cc33fb2ca082a

68.1 Diagram

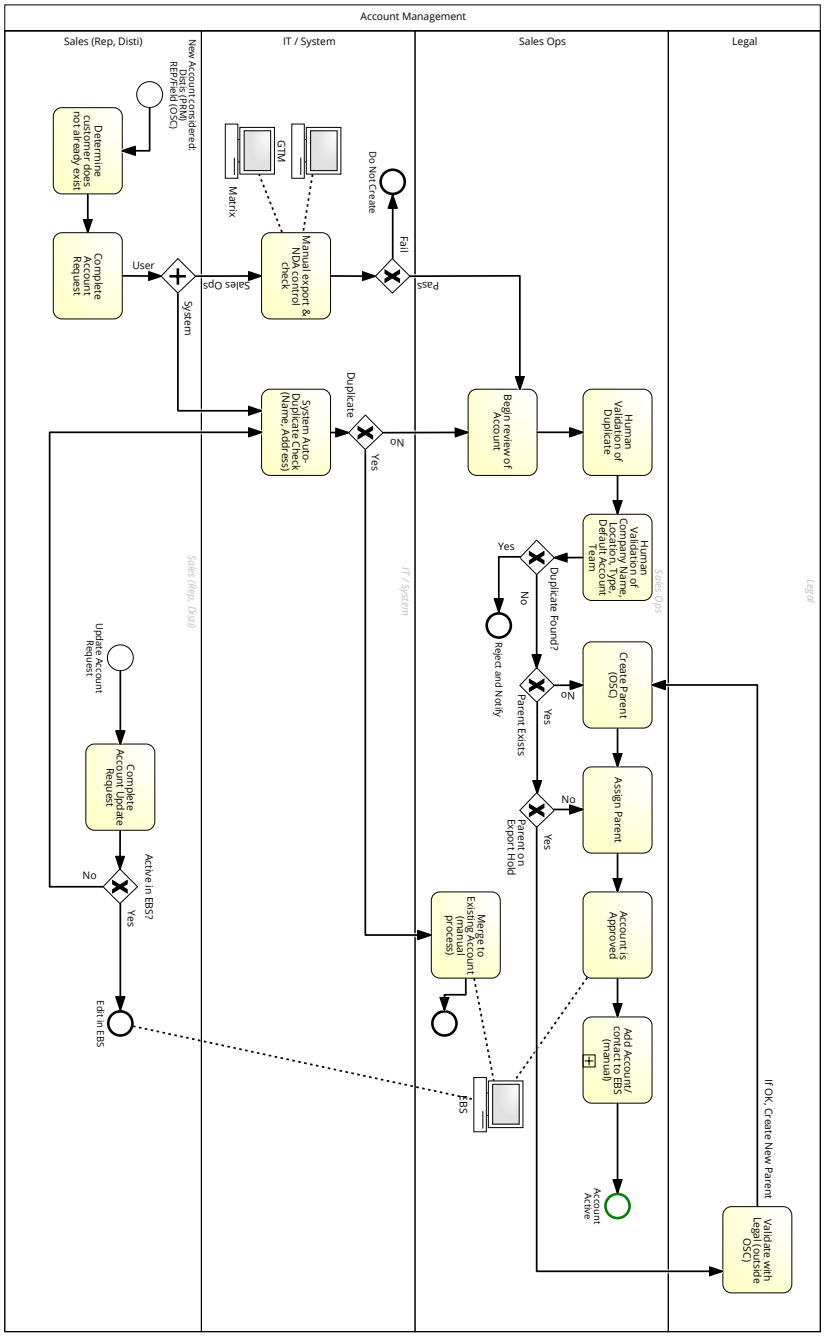

68.2 Description

Account creation and management in Oracle Sales Cloud

68.3 Elements

Process elements

New Account considered: Distis (PRM) REP/Field (OSC)

Start Event

Organization units: Account Management - Sales (Rep, Disti)

Determine customer does not already exist

Task

Organization units: Account Management - Sales (Rep, Disti)

Complete Account Request

Task

Organization units: Account Management - Sales (Rep, Disti)

Parallel Gateway

Parallel Gateway

Organization units: Account Management - Sales (Rep, Disti)

Manual export & NDA control check

Task

Organization units: Account Management - IT / System

IT Systems:

GTM

Matrix

Data-based Exclusive (XOR) Gateway

Data-based Exclusive (XOR) Gateway

Organization units: Account Management - IT / System

Do Not Create

End Event

Organization units: Account Management - IT / System

Update Account Request

Start Event

Organization units: Account Management - Sales (Rep, Disti)

Complete Account Update Request

Task

Organization units: Account Management - Sales (Rep, Disti)

Active in EBS?

Data-based Exclusive (XOR) Gateway

Organization units: Account Management - Sales (Rep, Disti)

System Auto-Duplicate Check (Name, Address)

Task

Organization units: Account Management - IT / System

Duplicate

Data-based Exclusive (XOR) Gateway

Organization units: Account Management - IT / System

Begin review of Account

Task

Organization units: Account Management - Sales Ops

Human Validation of Duplicate

Task

Organization units: Account Management - Sales Ops

Human Validation of Company Name, Location, Type, Default Account Team

Task

Organization units: Account Management - Sales Ops

Duplicate Found?

Data-based Exclusive (XOR) Gateway

Organization units: Account Management - Sales Ops

Parent Exists

Data-based Exclusive (XOR) Gateway

Organization units: Account Management - Sales Ops

Parent on Export Hold

Data-based Exclusive (XOR) Gateway

Organization units: Account Management - Sales Ops

Validate with Legal (outside OSC)

Task

Organization units: Account Management - Legal

Create Parent (OSC)

Task

Organization units: Account Management - Sales Ops

Assign Parent

Task

Organization units: Account Management - Sales Ops

Account is Approved

Task

Organization units: Account Management - Sales Ops

IT Systems: EBS

Add Account/ contact to EBS (manual)

Collapsed Subprocess

Organization units: Account Management - Sales Ops

Account Active

End Event

Organization units: Account Management - Sales Ops

Reject and Notify

End Event

Organization units: Account Management - Sales Ops

Merge to Existing Account (manual process)

Task

Organization units: Account Management - Sales Ops

IT Systems: EBS

End Event

End Event

Organization units: Account Management - Sales Ops

Edit in EBS

End Event

Organization units: Account Management - Sales (Rep, Disti)

IT Systems: EBS

Organization units

Account Management

Pool

IT / System

Lane

Organization unit: Account Management

Legal

Lane

Organization unit: Account Management

Sales (Rep, Disti)

Lane

Organization unit: Account Management

Sales Ops

Lane

Group comprising the customer service team, quote team, pricing team, and other sales managers

Organization unit: Account Management

Dictionary entries: Sales Ops

Data / IT-Systems

GTM

IT System

Global Trade Management system, conducts the restricted parties screening for export controls.

Organization unit: Account Management - IT / System

Dictionary entries: GTM: Global Trade Management system, conducts the restricted parties screening for export controls.

Matrix

IT System

Legal system that manages Customer NDAs

Organization unit: Account Management - IT / System

Dictionary entries: Matrix : Legal system that manages Customer NDAs

68.4 Linked dictionary entries

EBS

Oracle's e-Business supply chain management system. Also known as an ERP system.

GTM

Global Trade Management system, conducts the restricted parties screening for export controls.

Matrix

Legal system that manages Customer NDAs

Sales Ops

Group comprising the customer service team, quote team, pricing team, and other sales managers

Additional Attributes

69 Creating and Editing Splits in SPM (L3)

Diagram Type	Business Process Diagram (BPMN 2.0)
Path	Shared documents / Sub-Processes (L2) / Level 3 sub-processes
Author	Amber Barber
Revision Number	2
Last modified	May 18, 2016
Diagram Link	https://editor.signavio.com/p/editor?id=694732c1e7444104a438ec364ec5b7c2

69.1 Diagram

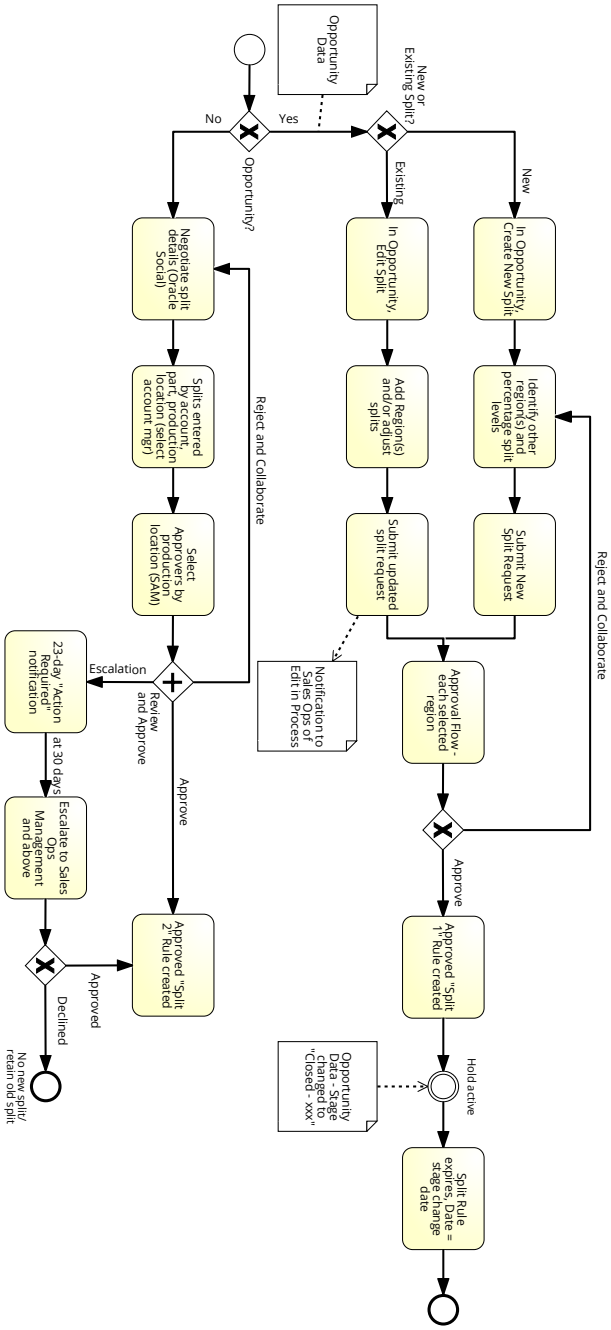

69.2 Description

Incentive Comp Splits creation, editing, and expiration

69.3 Elements

Process elements

Start Event

Start Event

Opportunity?

Data-based Exclusive (XOR) Gateway

Data objects: Opportunity Data

New or Existing Split?

Data-based Exclusive (XOR) Gateway

Data objects: Opportunity Data

In Opportunity, Create New Split

Task

In Opportunity, Edit Split

Task

Add Region(s) and/or adjust splits

Task

Submit updated split request

Task

Data objects: Notification to Sales Ops of Edit in Process

Approval Flow - each selected region

Task

Data-based Exclusive (XOR) Gateway

Data-based Exclusive (XOR) Gateway

Identify other region(s) and percentage split levels

Task

Submit New Split Request

Task

Approved "Split 1" Rule created

Task

Hold active

Intermediate Event

Data objects: Opportunity Data - Stage changed to "Closed - xxx"

Split Rule expires, Date = stage change date

Task

End Event

End Event

Negotiate split details (Oracle Social)

Task

Splits entered by account, part, production location (select account mgr)

Task

Select Approvers by production location (SAM)

Task

Review and Approve

Parallel Gateway

23-day "Action Required" notification

Task

Escalate to Sales Ops Management and above

Task

Data-based Exclusive (XOR) Gateway

Data-based Exclusive (XOR) Gateway

Approved "Split 2" Rule created

Task

No new split/ retain old split

End Event

Data / IT-Systems

Notification to Sales Ops of Edit in Process

Data Object

Opportunity Data

Data Object

Opportunity Data - Stage changed to "Closed - xxx"

Data Object

70 Customer Sample Orders (L3)

Diagram Type	Business Process Diagram (BPMN 2.0)
Path	Shared documents / Sub-Processes (L2) / Level 3 sub-processes
Author	Amber Barber
Revision Number	3
Last modified	May 18, 2016
Diagram Link	https://editor.signavio.com/p/editor?id=bfbe48d17e9a4addaa8293761b8d223d

70.1 Diagram

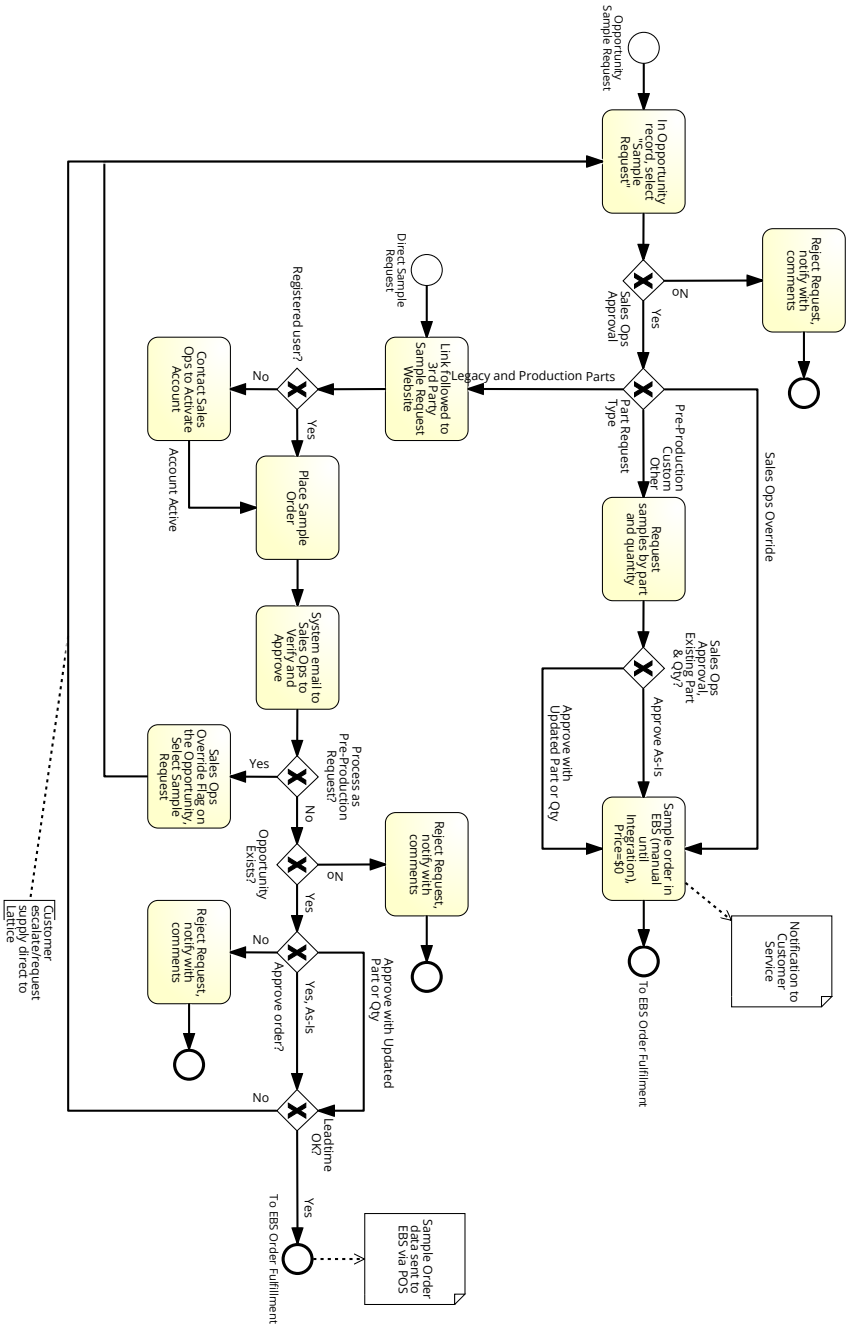

70.2 Description

Customer Sample Order process via Opportunity or Direct

70.3 Elements

Process elements

Opportunity Sample Request

Start Event

In Opportunity record, select "Sample Request"

Task

Sales Ops Approval

Data-based Exclusive (XOR) Gateway

Reject Request, notify with comments

Task

End Event

End Event

Part Request Type

Data-based Exclusive (XOR) Gateway

Request samples by part and quantity

Task

Sales Ops Approval, Existing Part & Qty?

Data-based Exclusive (XOR) Gateway

Sample order in EBS (manual until Integration), Price=$0

Task

Data objects: Notification to Customer Service

To EBS Order Fulfilment

End Event

Direct Sample Request

Start Event

Link followed to 3rd Party Sample Request Website

Task

Registered user?

Data-based Exclusive (XOR) Gateway

Contact Sales Ops to Activate Account

Task

Place Sample Order

Task

System email to Sales Ops to Verify and Approve

Task

Process as Pre-Production Request?

Data-based Exclusive (XOR) Gateway

Opportunity Exists?

Data-based Exclusive (XOR) Gateway

Reject Request, notify with comments

Task

End Event

End Event

Approve order?

Data-based Exclusive (XOR) Gateway

Leadtime OK?

Data-based Exclusive (XOR) Gateway

To EBS Order Fulfillment

End Event

Data objects: Sample Order data sent to EBS via POS

Reject Request, notify with comments

Task

End Event

End Event

Sales Ops Override Flag on the Opportunity, Select Sample Request

Task

Data / IT-Systems

Notification to Customer Service

Data Object

Sample Order data sent to EBS via POS

Data Object

71 Governance Review-Approve Cycle (L3)

Diagram Type	Business Process Diagram (BPMN 2.0)
Path	Shared documents / Sub-Processes (L2) / Level 3 sub-processes
Author	Amber Barber
Revision Number	5
Last modified	May 20, 2016
Diagram Link	https://editor.signavio.com/p/editor?id=89b33661361e4323b927fe4adf5d222e

71.1 Diagram

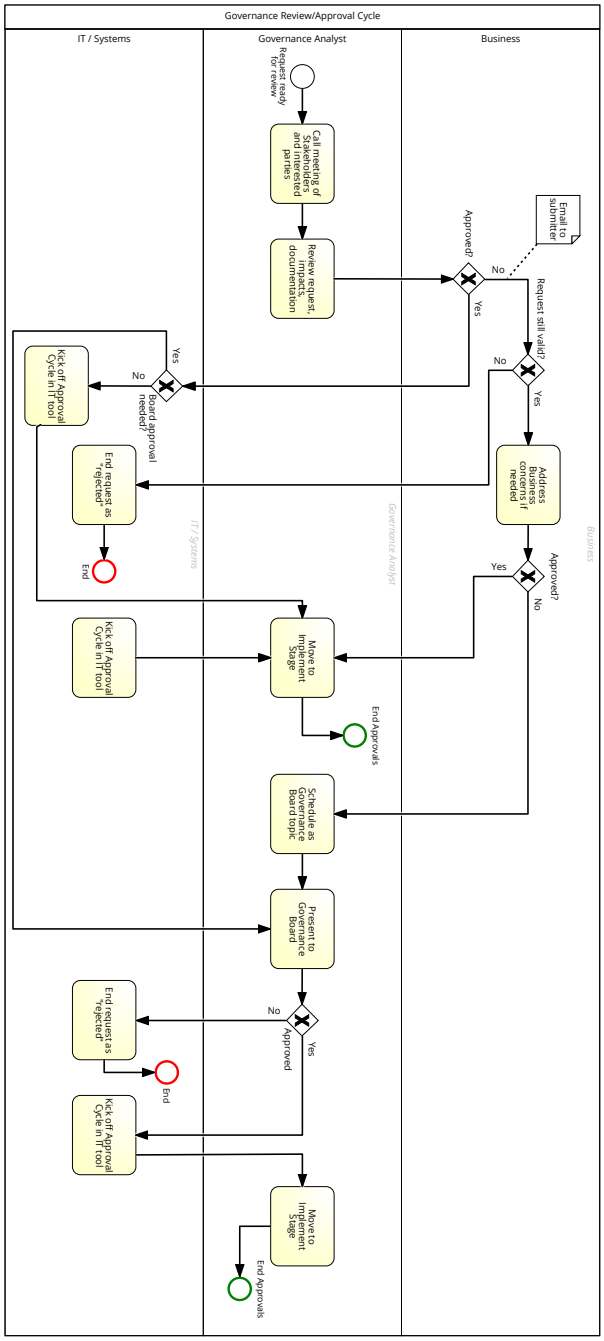

71.2 Elements

Process elements

Request ready for review

Start Event

Organization units: Governance Review/Approval Cycle - Governance Analyst

Call meeting of Stakeholders and interested parties

Task

Organization units: Governance Review/Approval Cycle - Governance Analyst

Review request, impacts, documentation

Task

Organization units: Governance Review/Approval Cycle - Governance Analyst

Approved?

Data-based Exclusive (XOR) Gateway

Organization units: Governance Review/Approval Cycle - Business

Data objects: Email to submitter

Request still valid?

Data-based Exclusive (XOR) Gateway

Organization units: Governance Review/Approval Cycle - Business

Data objects: Email to submitter

Address Business concerns if needed

Task

Organization units: Governance Review/Approval Cycle - Business

Approved?

Data-based Exclusive (XOR) Gateway

Organization units: Governance Review/Approval Cycle - Business

Schedule as Governance Board topic

Task

Organization units: Governance Review/Approval Cycle - Governance Analyst

End request as "rejected"

Task

Organization units: Governance Review/Approval Cycle - IT / Systems

End

End Event

Organization units: Governance Review/Approval Cycle - IT / Systems

Board approval needed?

Data-based Exclusive (XOR) Gateway

Organization units: Governance Review/Approval Cycle - IT / Systems

Present to Governance Board

Task

Organization units: Governance Review/Approval Cycle - Governance Analyst

Approved

Data-based Exclusive (XOR) Gateway

Organization units: Governance Review/Approval Cycle - Governance Analyst

End request as "rejected"

Task

Organization units: Governance Review/Approval Cycle - IT / Systems

End

End Event

Organization units: Governance Review/Approval Cycle - IT / Systems

Kick off Approval Cycle in IT tool

Task

Organization units: Governance Review/Approval Cycle - IT / Systems

Move to Implement Stage

Task

Organization units: Governance Review/Approval Cycle - Governance Analyst

End Approvals

End Event

Organization units: Governance Review/Approval Cycle - Governance Analyst

Kick off Approval Cycle in IT tool

Task

Organization units: Governance Review/Approval Cycle - IT / Systems

Kick off Approval Cycle in IT tool

Task

Organization units: Governance Review/Approval Cycle - IT / Systems

Move to Implement Stage

Task

Organization units: Governance Review/Approval Cycle - Governance Analyst

End Approvals

End Event

Organization units: Governance Review/Approval Cycle - Governance Analyst

Organization units

Business

Lane

Organization unit: Governance Review/Approval Cycle

Governance Analyst

Lane

Organization unit: Governance Review/Approval Cycle

Governance Review/Approval Cycle

Pool

IT / Systems

Lane

Organization unit: Governance Review/Approval Cycle

Data / IT-Systems

Email to submitter

Data Object

Organization unit: Governance Review/Approval Cycle - Business

72 HR Benefits Changes (L3)

Diagram Type	Business Process Diagram (BPMN 2.0)
Path	Shared documents / Sub-Processes (L2) / Level 3 sub-processes
Author	Amber Barber
Revision Number	6
Last modified	Apr 1, 2016
Diagram Link	https://editor.signavio.com/p/editor?id=a29b565ac59c462a965bf2f29fb54dee

72.1 Diagram

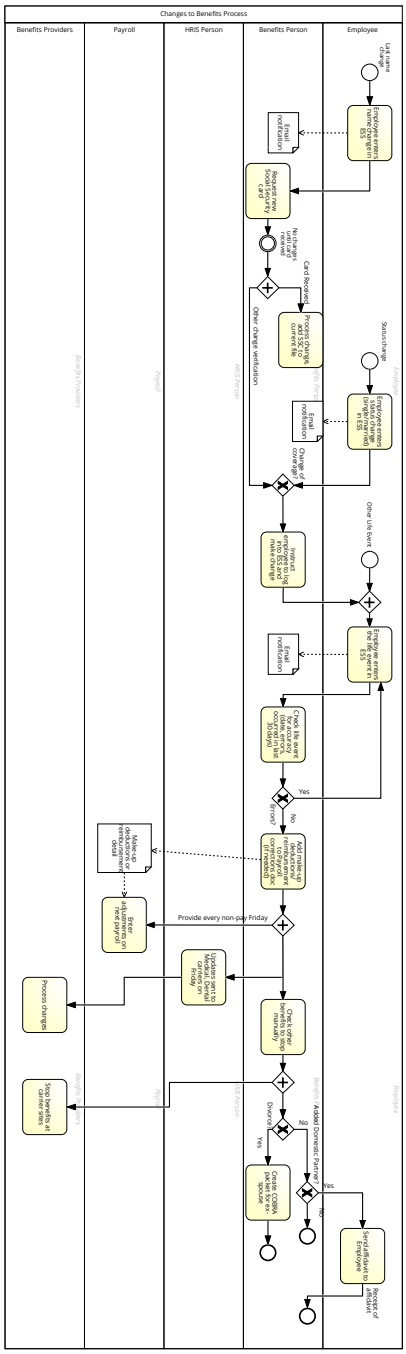

72.2 Elements

Process elements

Last name change

Start Event

Organization units: Changes to Benefits Process - Employee

Employee enters name change in ESS

Task

Organization units: Changes to Benefits Process - Employee

Data objects: Email notification

Request new Social Security card

Task

Organization units: Changes to Benefits Process - Benefits Person

No changes until card received

Intermediate Event

Organization units: Changes to Benefits Process - Benefits Person

Parallel Gateway

Parallel Gateway

Organization units: Changes to Benefits Process - Benefits Person

Process change, add SSC to current file

Task

Organization units: Changes to Benefits Process - Benefits Person

Status change

Start Event

Organization units: Changes to Benefits Process - Employee

Employee enters status change (single/married)in ESS

Task

Organization units: Changes to Benefits Process - Employee

Data objects: Email notification

Change of coverage?

Data-based Exclusive (XOR) Gateway

Organization units: Changes to Benefits Process - Benefits Person

Instruct employee to log into ESS and make change

Task

Organization units: Changes to Benefits Process - Benefits Person

Other Life Event

Start Event

Organization units: Changes to Benefits Process - Employee

Parallel Gateway

Parallel Gateway

Organization units: Changes to Benefits Process - Employee

Employee enters the life event in ESS

Task

Organization units: Changes to Benefits Process - Employee

Data objects: Email notification

Check life event for accuracy (date, errors, occurred in last 30 days)

Task

Organization units: Changes to Benefits Process - Benefits Person

Errors?

Data-based Exclusive (XOR) Gateway

Organization units: Changes to Benefits Process - Benefits Person

Add make-up deductions/ reimbursement to Payroll corrections doc (if needed)

Task

Organization units: Changes to Benefits Process - Benefits Person

Data objects: Make-up deductions or reimbursement detail

Parallel Gateway

Parallel Gateway

Organization units: Changes to Benefits Process - Benefits Person

Check other benefits to stop manually

Task

Organization units: Changes to Benefits Process - Benefits Person

Parallel Gateway

Parallel Gateway

Organization units: Changes to Benefits Process - Benefits Person

Divorce?

Data-based Exclusive (XOR) Gateway

Organization units: Changes to Benefits Process - Benefits Person

Added Domestic Partner?

Data-based Exclusive (XOR) Gateway

Organization units: Changes to Benefits Process - Benefits Person

Send affidavit to Employee

Task

Organization units: Changes to Benefits Process - Employee

End Event

End Event

Organization units: Changes to Benefits Process - Benefits Person

End Event

End Event

Organization units: Changes to Benefits Process - Benefits Person

Create COBRA packet for ex-spouse

Task

Organization units: Changes to Benefits Process - Benefits Person

End Event

End Event

Organization units: Changes to Benefits Process - Benefits Person

Stop benefits at carrier sites

Task

Organization units: Changes to Benefits Process - Benefits Providers

Updates sent to Medical, Dental carriers on Friday

Task

Organization units: Changes to Benefits Process - HRIS Person

Process changes

Task

Organization units: Changes to Benefits Process - Benefits Providers

Enter adjustments on next payroll

Task

Organization units: Changes to Benefits Process - Payroll

Data objects: Make-up deductions or reimbursement detail

Organization units

Benefits Person

Lane

Organization unit: Changes to Benefits Process

Benefits Providers

Lane

Organization unit: Changes to Benefits Process

Changes to Benefits Process

Pool

Employee

Lane

Organization unit: Changes to Benefits Process

HRIS Person

Lane

Organization unit: Changes to Benefits Process

Payroll

Lane

Organization unit: Changes to Benefits Process

Data / IT-Systems

Email notification

Data Object

Organization unit: Changes to Benefits Process - Benefits Person

Email notification

Data Object

Organization unit: Changes to Benefits Process - Benefits Person

Email notification

Data Object

Organization unit: Changes to Benefits Process - Benefits Person

Make-up deductions or reimbursement detail

Data Object

Organization unit: Changes to Benefits Process - Payroll

73 HR Benefits New Hire (L3)

Diagram Type	Business Process Diagram (BPMN 2.0)
Path	Shared documents / Sub-Processes (L2) / Level 3 sub-processes
Author	Amber Barber
Revision Number	3
Last modified	Apr 1, 2016
Diagram Link	https://editor.signavio.com/p/editor?id=a6a29e511f82442395ce0e0e5fc26186

73.1 Diagram

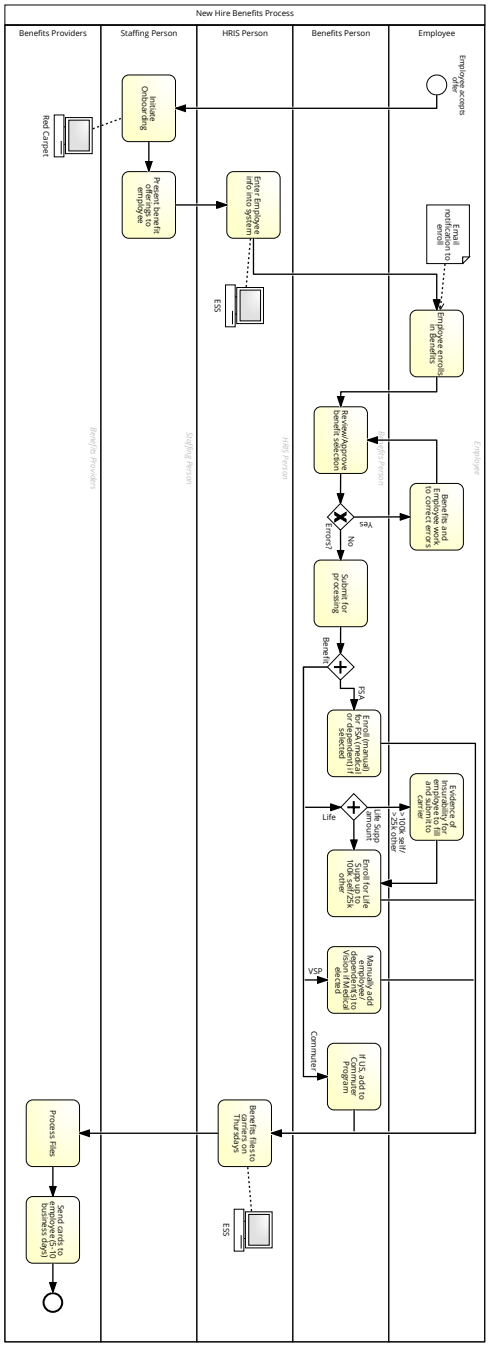

73.2 Elements

Process elements

Employee accepts offer

Start Event

Organization units: New Hire Benefits Process - Employee

Initiate Onboarding

Task

Organization units: New Hire Benefits Process - Staffing Person

IT Systems: Red Carpet

Present benefit offerings to employee

Task

Organization units: New Hire Benefits Process - Staffing Person

Enter Employee info into system

Task

Organization units: New Hire Benefits Process - HRIS Person

IT Systems: ESS

Employee enrolls in Benefits

Task

Organization units: New Hire Benefits Process - Employee

Data objects: Email notification to enroll

Review/Approve benefit selection

Task

Organization units: New Hire Benefits Process - Benefits Person

Errors?

Data-based Exclusive (XOR) Gateway

Organization units: New Hire Benefits Process - Benefits Person

Benefits and Employee work to correct errors

Task

Organization units: New Hire Benefits Process - Employee

Submit for processing

Task

Organization units: New Hire Benefits Process - Benefits Person

Benefit

Parallel Gateway

Organization units: New Hire Benefits Process - Benefits Person

Enroll (manual) for FSA (medical or dependent) if selected

Task

Organization units: New Hire Benefits Process - Benefits Person

Manually add employee/ dependent(s) to Vision if Medical elected

Task

Organization units: New Hire Benefits Process - Benefits Person

If US, add to Commuter Program

Task

Organization units: New Hire Benefits Process - Benefits Person

Life Supp amount

Parallel Gateway

Organization units: New Hire Benefits Process - Benefits Person

Evidence of Insurability for employee to fill and submit to carrier

Task

Organization units: New Hire Benefits Process - Employee

Enroll for Life Supp up to 100k self/25k other

Task

Organization units: New Hire Benefits Process - Benefits Person

Benefits files to carriers on Thursdays

Task

Organization units: New Hire Benefits Process - HRIS Person

IT Systems: ESS

Process Files

Task

Organization units: New Hire Benefits Process - Benefits Providers

Send cards to employee (5-10 business days)

Task

Organization units: New Hire Benefits Process - Benefits Providers

End Event

End Event

Organization units: New Hire Benefits Process - Benefits Providers

Organization units

Benefits Person

Lane

Organization unit: New Hire Benefits Process

Benefits Providers

Lane

Organization unit: New Hire Benefits Process

Employee

Lane

Organization unit: New Hire Benefits Process

HRIS Person

Lane

Organization unit: New Hire Benefits Process

New Hire Benefits Process

Pool

Staffing Person

Lane

Organization unit: New Hire Benefits Process

Data / IT-Systems

Email notification to enroll

Data Object

Organization unit: New Hire Benefits Process - Employee

ESS

IT System

Organization unit: New Hire Benefits Process - HRIS Person

ESS

IT System

Organization unit: New Hire Benefits Process - HRIS Person

Red Carpet

IT System

Organization unit: New Hire Benefits Process - Benefits Providers

74 HR Benefits Reporting (L3)

Diagram Type	Business Process Diagram (BPMN 2.0)
Path	Shared documents / Sub-Processes (L2) / Level 3 sub-processes
Author	Amber Barber
Revision Number	2
Last modified	Mar 24, 2016
Diagram Link	https://editor.signavio.com/p/editor?id=db0b6ff034bf443593a537cd58b52e48

74.1 Diagram

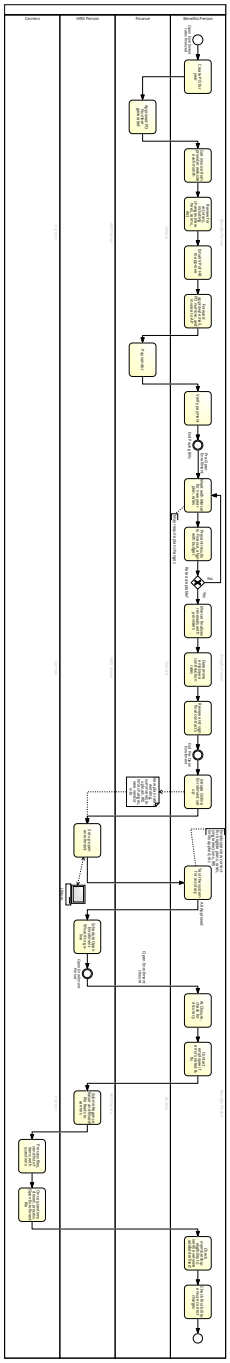
Carriers
HRM Person
Finance
Benefits Person
Open Enrollment rates finalized
Log in to HRIS
Review Open Enrollment rates
Select Medical Plan
Select Dental Plan
Select Vision Plan
Select Other Benefits
Review Selections
Submit Selections
Send Selections to Carrier
Receive Confirmation
Send Confirmation to Finance
Receive Confirmation
Send Confirmation to Benefits Person
Receive Confirmation
Send Confirmation to Benefits Person
Receive Confirmation
Send Confirmation to Benefits Person

Organization units: Unnamed - Benefits Person

Create PO for year

Task

Organization units: Unnamed - Benefits Person

Approved PO Number generated

Task

Organization units: Unnamed - Finance

Get invoice from provider website each month

Task

Organization units: Unnamed - Benefits Person

Review for accuracy, including changes (new hires, terms, etc)

Task

Organization units: Unnamed - Benefits Person

Email VP of HR to approve

Task

Organization units: Unnamed - Benefits Person

Forward approval email, PO number, and invoice to AP

Task

Organization units: Unnamed - Benefits Person

Pay vendor

Task

Organization units: Unnamed - Finance

Verify payment

Task

Organization units: Unnamed - Benefits Person

End Paying Bills

Intermediate Event

Organization units: Unnamed - Benefits Person

Meet with Mercer for new year plan, rates

Task

Organization units: Unnamed - Benefits Person

Present results to Finance, align with budget

Task

Organization units: Unnamed - Benefits Person

Rate acceptable?

Data-based Exclusive (XOR) Gateway

Organization units: Unnamed - Benefits Person

Mercer finalizes renewals with providers

Task

Organization units: Unnamed - Benefits Person

Determine employee contribution rates

Task

Organization units: Unnamed - Benefits Person

Review and sign final contracts

Task

Organization units: Unnamed - Benefits Person

End Pre-Open Enrollment

Intermediate Event

Organization units: Unnamed - Benefits Person

Initiate Online Enrollment set up

Task

Organization units: Unnamed - Benefits Person

Data objects: New plan rates, wording, summaries to upload, IRS limit changes, new vendor info

Set up open enrollment

Task

Organization units: Unnamed - HRIS Person

Data objects: New plan rates, wording, summaries to upload, IRS limit changes, new vendor info

IT Systems: Ultipro

Test the system for accuracy

Task

Organization units: Unnamed - Benefits Person

Schedule Open Enrollment Wizard to go-live

Task

Organization units: Unnamed - HRIS Person

Open Enrollment Period

Intermediate Event

Organization units: Unnamed - HRIS Person

At Closure, check for accuracy

Task

Organization units: Unnamed - Benefits Person

Contact employee if errors noted & fix

Task

Organization units: Unnamed - Benefits Person

Submit Regence Kaiser and Model file feeds to carriers

Task

Organization units: Unnamed - HRIS Person

Process files, send list of items with questions

Task

Organization units: Unnamed - Carriers

Once questions closed, process Open Enrollment file

Task

Organization units: Unnamed - Carriers

Check membership eligibility to verify everyone added/termed

Task

Organization units: Unnamed - Benefits Person

Check first bill to ensure correct charges

Task

Organization units: Unnamed - Benefits Person

End Event

End Event

Organization units: Unnamed - Benefits Person

Organization units

Benefits Person

Lane

Organization unit: Unnamed

Carriers

Lane

Organization unit: Unnamed

Finance

Lane

Organization unit: Unnamed

HRIS Person

Lane

Organization unit: Unnamed

Pool

Pool

Data / IT-Systems

New plan rates, wording, summaries to upload, IRS limit changes, new vendor info

Data Object

Organization unit: Unnamed - Finance

Ultipro

IT System

Organization unit: Unnamed - HRIS Person

75 HR Benefits Termination Process (L3)

Diagram Type	Business Process Diagram (BPMN 2.0)
Path	Shared documents / Sub-Processes (L2) / Level 3 sub-processes
Author	Amber Barber
Revision Number	2
Last modified	Mar 31, 2016
Diagram Link	https://editor.signavio.com/p/editor?id=b0040473252244b48dd78f8b17309ef5

75.1 Diagram

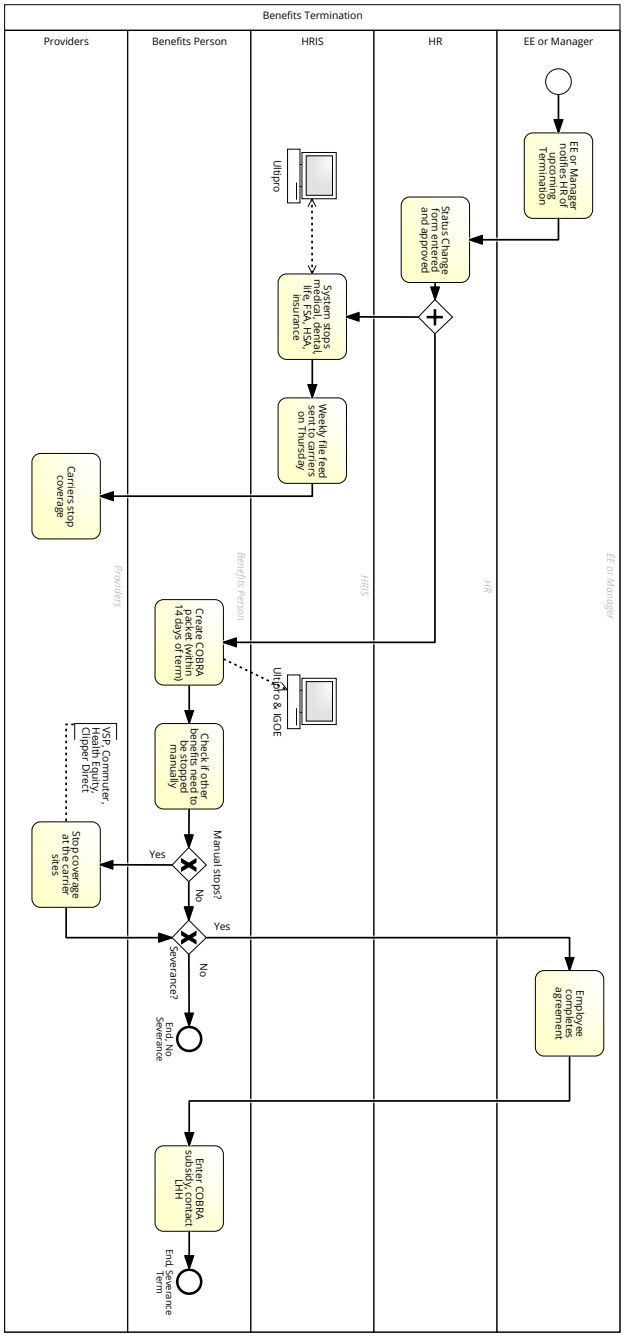

75.2 Elements

Process elements

Start Event

Start Event

Organization units: Benefits Termination - EE or Manager

EE or Manager notifies HR of upcoming Termination

Task

Organization units: Benefits Termination - EE or Manager

Status Change form entered and approved

Task

Organization units: Benefits Termination - HR

Parallel Gateway

Parallel Gateway

Organization units: Benefits Termination - HR

System stops medical, dental, life, FSA, HSA, insurance

Task

Organization units: Benefits Termination - HRIS

IT Systems: Ultipro

Weekly file feed sent to carriers on Thursday

Task

Organization units: Benefits Termination - HRIS

Carriers stop coverage

Task

Organization units: Benefits Termination - Providers

Create COBRA packet (within 14 days of term)

Task

Organization units: Benefits Termination - Benefits Person

IT Systems: Ultipro & IGOE

Check if other benefits need to be stopped manually

Task

Organization units: Benefits Termination - Benefits Person

Manual stops?

Data-based Exclusive (XOR) Gateway

Organization units: Benefits Termination - Benefits Person

Stop coverage at the carrier sites

Task

Organization units: Benefits Termination - Providers

Severance?

Data-based Exclusive (XOR) Gateway

Organization units: Benefits Termination - Benefits Person

End, No Severance

End Event

Organization units: Benefits Termination - Benefits Person

Employee completes agreement

Task

Organization units: Benefits Termination - EE or Manager

Enter COBRA subsidy, contact LHH

Task

Organization units: Benefits Termination - Benefits Person

End, Severance Term

End Event

Organization units: Benefits Termination - Benefits Person

Organization units

Benefits Person

Lane

Organization unit: Benefits Termination

Benefits Termination

Pool

EE or Manager

Lane

Organization unit: Benefits Termination

HR

Lane

Organization unit: Benefits Termination

HRIS

Lane

Organization unit: Benefits Termination

Providers

Lane

Organization unit: Benefits Termination

Data / IT-Systems

Ultipro

IT System

Organization unit: Benefits Termination - HRIS

Ultipro & IGOE

IT System

Organization unit: Benefits Termination - HRIS

76 HR Bonus Compensation (L3)

Diagram Type	Business Process Diagram (BPMN 2.0)
Path	Shared documents / Sub-Processes (L2) / Level 3 sub-processes
Author	Amber Barber
Revision Number	2
Last modified	Apr 1, 2016
Diagram Link	https://editor.signavio.com/p/editor?id=69ab7e7515df4d51b85b2aa6a76ff296

76.1 Diagram

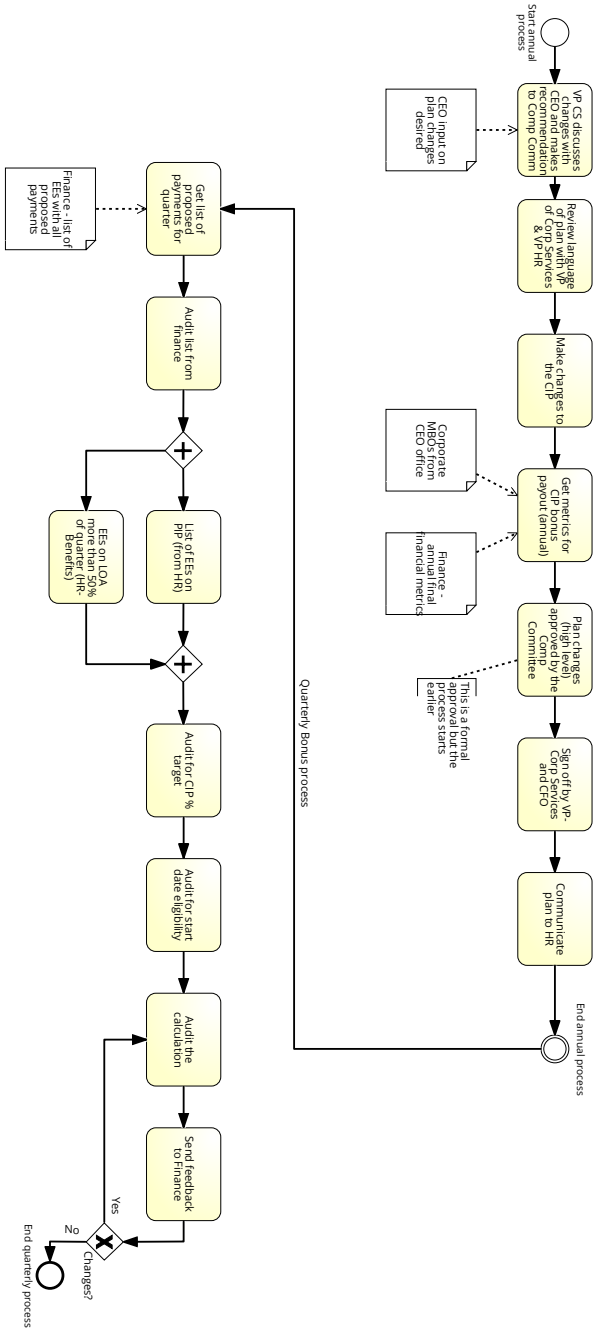

76.2 Elements

Process elements

Start annual process

Start Event

VP CS discusses changes with CEO and makes recommendation to Comp Comm

Task

Data objects: CEO input on plan changes desired

Review language of plan with VP of Corp Services & VP HR

Task

Make changes to the CIP

Task

Get metrics for CIP bonus payout (annual)

Task

Data objects:

Finance - annual final financial metrics

Corporate MBOs from CEO office

Plan changes (high level) approved by the Comp Committee

Task

Sign off by VP-Corp Services and CFO

Task

Communicate plan to HR

Task

End annual process

Intermediate Event

Get list of proposed payments for quarter

Task

Data objects: Finance - list of EEs with all proposed payments

Audit list from finance

Task

Parallel Gateway

Parallel Gateway

List of EEs on PIP (from HR)

Task

EEs on LOA more than 50% of quarter (HR-Benefits)

Task

Parallel Gateway

Parallel Gateway

Audit for CIP % target

Task

Audit for start date eligibility

Task

Audit the calculation

Task

Send feedback to Finance

Task

Changes?

Data-based Exclusive (XOR) Gateway

End quarterly process

End Event

Data / IT-Systems

CEO input on plan changes desired

Data Object

Corporate MBOs from CEO office

Data Object

Finance - annual final financial metrics

Data Object

Finance - list of EEs with all proposed payments

Data Object

77 HR Executive Compensation (L3)

Diagram Type	Business Process Diagram (BPMN 2.0)
Path	Shared documents / Sub-Processes (L2) / Level 3 sub-processes
Author	Amber Barber
Revision Number	3
Last modified	Apr 1, 2016
Diagram Link	https://editor.signavio.com/p/editor?id=401070c191c94db4bd608a18e95e1037

77.1 Diagram

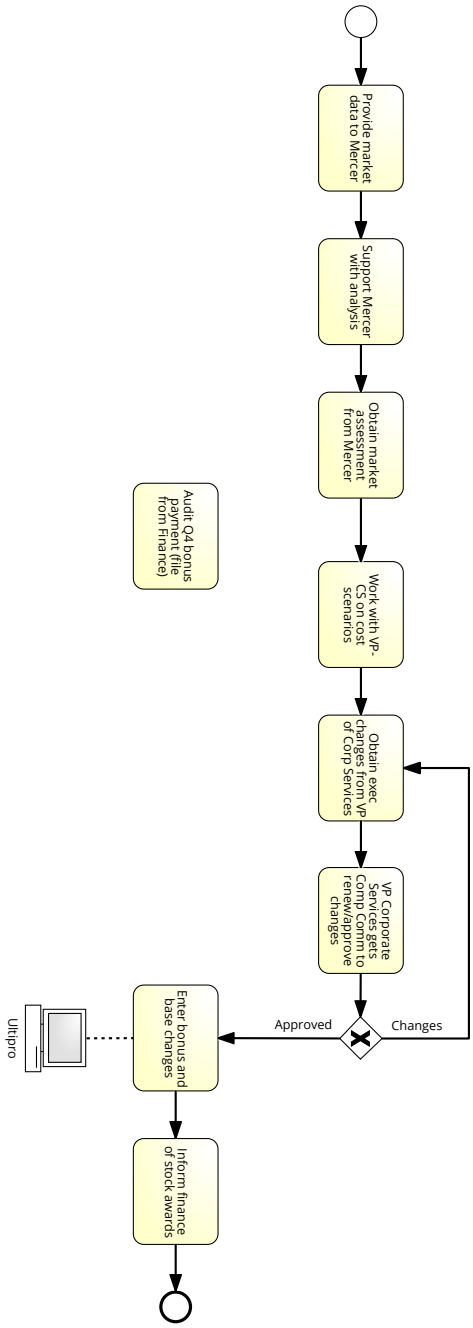

77.2 Elements

Process elements

Start Event

Start Event

Provide market data to Mercer

Task

Support Mercer with analysis

Task

Obtain market assessment from Mercer

Task

Work with VP-CS on cost scenarios

Task

Obtain exec changes from VP of Corp Services

Task

VP Corporate Services gets Comp Comm to renew/approve changes

Task

Data-based Exclusive (XOR) Gateway

Data-based Exclusive (XOR) Gateway

Enter bonus and base changes

Task

IT Systems: Ultipro

Inform finance of stock awards

Task

End Event

End Event

Audit Q4 bonus payment (file from Finance)

Task

Data / IT-Systems

Ultipro

IT System

78 HR Focal-Related Compensation (L3)

Diagram Type	Business Process Diagram (BPMN 2.0)
Path	Shared documents / Sub-Processes (L2) / Level 3 sub-processes
Author	Amber Barber
Revision Number	2
Last modified	Apr 1, 2016
Diagram Link	https://editor.signavio.com/p/editor?id=10a43a6240a142aa913acdaf865ddf83

78.1 Diagram

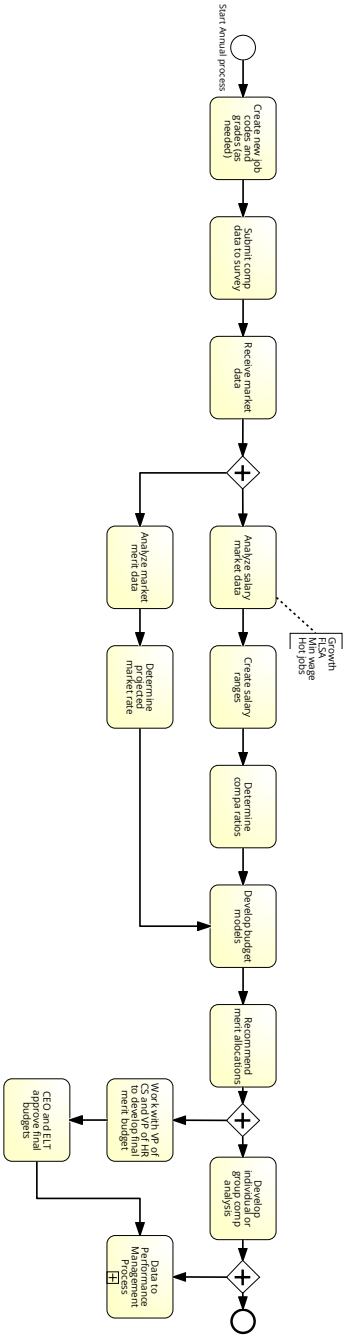

78.2 Elements

Process elements

Start Annual process

Start Event

Create new job codes and grades (as needed)

Task

Submit comp data to survey

Task

Receive market data

Task

Parallel Gateway

Parallel Gateway

Analyze salary market data

Task

Create salary ranges

Task

Determine compa ratios

Task

Analyze market merit data

Task

Determine projected market rate

Task

Develop budget models

Task

Recommend merit allocations

Task

Parallel Gateway

Parallel Gateway

Develop individual or group comp analysis

Task

Parallel Gateway

Parallel Gateway

End Event

End Event

Work with VP of CS and VP of HR to develop final merit budget

Task

CEO and ELT approve final budgets

Task

Data to Performance Management Process

Collapsed Subprocess

Subprocess reference: HR Performance Management Processes (https://editor.signavio.com/p/model/d0e6b0b47f6b49cf8eca544beafbd37b)

79 HR Retention Compensation (L3)

Diagram Type	Business Process Diagram (BPMN 2.0)
Path	Shared documents / Sub-Processes (L2) / Level 3 sub-processes
Author	Amber Barber
Revision Number	3
Last modified	Mar 31, 2016
Diagram Link	https://editor.signavio.com/p/editor?id=2a988752556b4d2e954acfc39055f366

79.1 Diagram

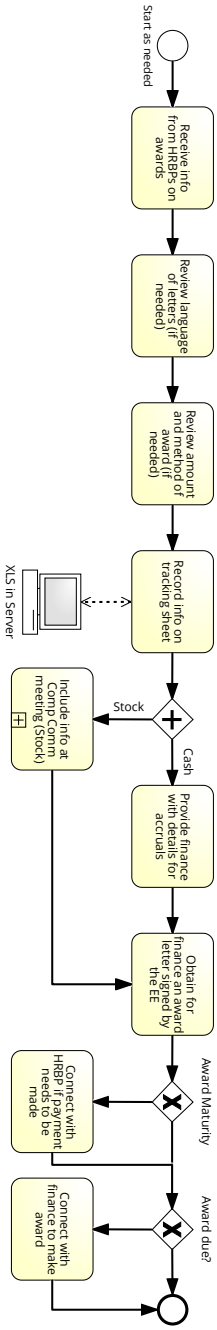

79.2 Elements

Process elements

Start as needed

Start Event

Receive info from HRBPs on awards

Task

Review language of letters (if needed)

Task

Review amount and method of award (if needed)

Task

Record info on tracking sheet

Task

IT Systems: XLS in Server

Parallel Gateway

Parallel Gateway

Provide finance with details for accruals

Task

Include info at Comp Comm meeting (Stock)

Collapsed Subprocess

Subprocess reference: HR Stock Compensation (L3) (https://editor.signavio.com/p/model/64036ff8d0c44947b43334778a476621)

Obtain for finance an award letter signed by the EE

Task

Award Maturity

Data-based Exclusive (XOR) Gateway

Connect with HRBP if payment needs to be made

Task

Award due?

Data-based Exclusive (XOR) Gateway

Connect with finance to make award

Task

End Event

End Event

Data / IT-Systems

XLS in Server

IT System

80 HR Stock Compensation (L3)

Diagram Type	Business Process Diagram (BPMN 2.0)
Path	Shared documents / Sub-Processes (L2) / Level 3 sub-processes

Author	Amber Barber
Revision Number	2
Last modified	Apr 1, 2016
Diagram Link	https://editor.signavio.com/p/editor?id=64036ff8d0c44947b43334778a476621

80.1 Diagram

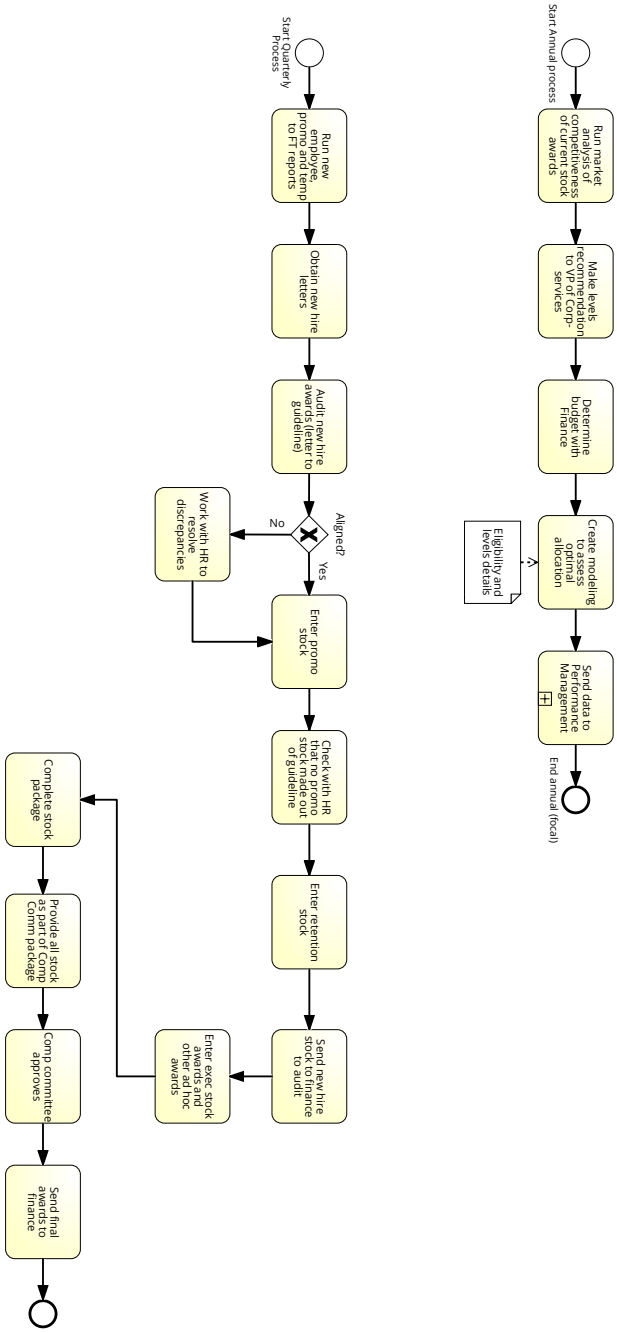

80.2 Elements

Process elements

Start Annual process

Start Event

Run market analysis of competitiveness of current stock awards

Task

Make levels recommendation to VP of Corp-services

Task

Determine budget with Finance

Task

Create modeling to assess optimal allocation

Task

Data objects: Eligibility and levels details

Send data to Performance Management

Collapsed Subprocess

Subprocess reference: HR Performance Management Processes (https://editor.signavio.com/p/model/d0e6b0b47f6b49cf8eca544beafbd37b)

End annual (focal)

End Event

Start Quarterly Process

Start Event

Run new employee, promo and temp to FT reports

Task

Obtain new hire letters

Task

Audit new hire awards (letter to guideline)

Task

Aligned?

Data-based Exclusive (XOR) Gateway

Work with HR to resolve discrepancies

Task

Enter promo stock

Task

Check with HR that no promo stock made out of guideline

Task

Enter retention stock

Task

Send new hire stock to finance to audit

Task

Enter exec stock awards and other ad hoc awards

Task

Complete stock package

Task

Provide all stock as part of Comp Comm package

Task

Comp committee approves

Task

Send final awards to finance

Task

End Event

End Event

Data / IT-Systems

Eligibility and levels details

Data Object

81 Incentive Compensation Planning and Payment (L3)

Diagram Type	Business Process Diagram (BPMN 2.0)
Path	Shared documents / Sub-Processes (L2) / Level 3 sub-processes
Author	Amber Barber
Revision Number	6
Last modified	May 18, 2016
Diagram Link	https://editor.signavio.com/p/editor?id=864bf2ac8969424b8f5996512b82c4de

81.1 Diagram

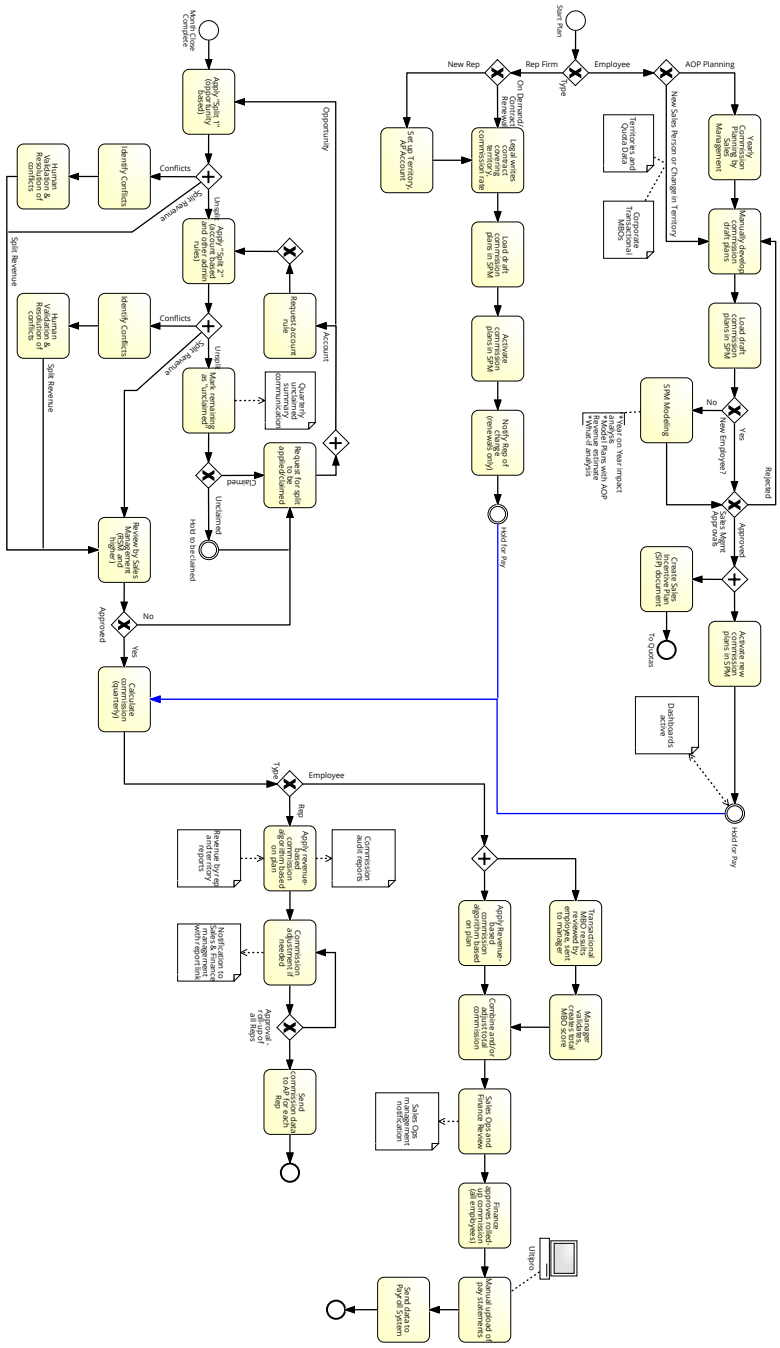

81.2 Description

Incentive Comp planning and pay for employees and reps

81.3 Elements

Process elements

Start Plan

Start Event

Type

Data-based Exclusive (XOR) Gateway

Data-based Exclusive (XOR) Gateway

Data-based Exclusive (XOR) Gateway

Data objects:

Territories and Quota Data

Corporate Transactional MBOs

Yearly Commission Planning by Sales Management

Task

Manually develop commission draft plans

Task

Data objects:

Territories and Quota Data

Corporate Transactional MBOs

Load draft commission plans in SPM

Task

New Employee?

Data-based Exclusive (XOR) Gateway

SPM Modeling

Task

Sales Mgmt Approvals

Data-based Exclusive (XOR) Gateway

Parallel Gateway

Parallel Gateway

Activate new commission plans in SPM

Task

Hold for Pay

Intermediate Event

Data objects: Dashboards active

Create Sales Incentive Plan (SIP) document

Task

To Quotas

End Event

Data-based Exclusive (XOR) Gateway

Data-based Exclusive (XOR) Gateway

Set up Territory, AP Account

Task

Legal writes contract covering territory, commission rate

Task

Load draft commission plans in SPM

Task

Activate commission plans in SPM

Task

Notify Rep of change (renewals only)

Task

Hold for Pay

Intermediate Event

Month Close Complete

Start Event

Apply "Split 1" (opportunity based)

Task

Parallel Gateway

Parallel Gateway

Apply "Split 2" (account based and other admin rules)

Task

Parallel Gateway

Parallel Gateway

Identify Conflicts

Task

Human Validation & Resolution of conflicts

Task

Identify Conflicts

Task

Human Validation & Resolution of conflicts

Task

Data-based Exclusive (XOR) Gateway

Data-based Exclusive (XOR) Gateway

Request account rule

Task

Mark remaining as "unclaimed"

Task

Data objects: Quarterly unclaimed summary communication

Parallel Gateway

Parallel Gateway

Request for split to be applied/claimed

Task

Data-based Exclusive (XOR) Gateway

Data-based Exclusive (XOR) Gateway

Review by Sales Management (RSM and higher)

Task

Hold to be claimed

Intermediate Event

Approved

Data-based Exclusive (XOR) Gateway

Calculate commission (quarterly)

Task

Type

Data-based Exclusive (XOR) Gateway

Apply revenue-based commission algorithm based on plan

Task

Data objects:

Revenue by rep and territory reports

Commission audit reports

Parallel Gateway

Parallel Gateway

Transactional MBO results reviewed by employee, sent to manager

Task

Apply Revenue-based commission algorithm based on plan

Task

Commission adjustment if needed

Task

Data objects: Notification to Sales & Finance management with report link

Manager validates, creates total MBO score

Task

Combine and/or adjust total commission

Task

Approval - roll-up of all Reps

Data-based Exclusive (XOR) Gateway

Send commission data to AP for each Rep

Task

Sales Ops and Finance Review

Task

Data objects: Sales Ops management notification

End Event

End Event

Finance approves rolled-up commission (all employees)

Task

Manual upload of pay statements

Task

IT Systems: Ultipro

Send data to Payroll System

Task

End Event

End Event

Data / IT-Systems

Commission audit reports

Data Object

Corporate Transactional MBOs

Data Object

Dashboards active

Data Object

Notification to Sales & Finance management with report link

Data Object

Quarterly unclaimed summary communication

Data Object

Revenue by rep and territory reports

Data Object

Sales Ops management notification

Data Object

Territories and Quota Data

Data Object

Ultipro

IT System

82 IP Licensing

Diagram Type	Business Process Diagram (BPMN 2.0)
Path	Shared documents / Sub-Processes (L2) / Level 3 sub-processes
Author	Amber Barber
Revision Number	2
Last modified	Apr 12, 2016
Diagram Link	https://editor.signavio.com/p/editor?id=91c3a77c17c845a5853d2ed74f9879fc

82.1 Diagram

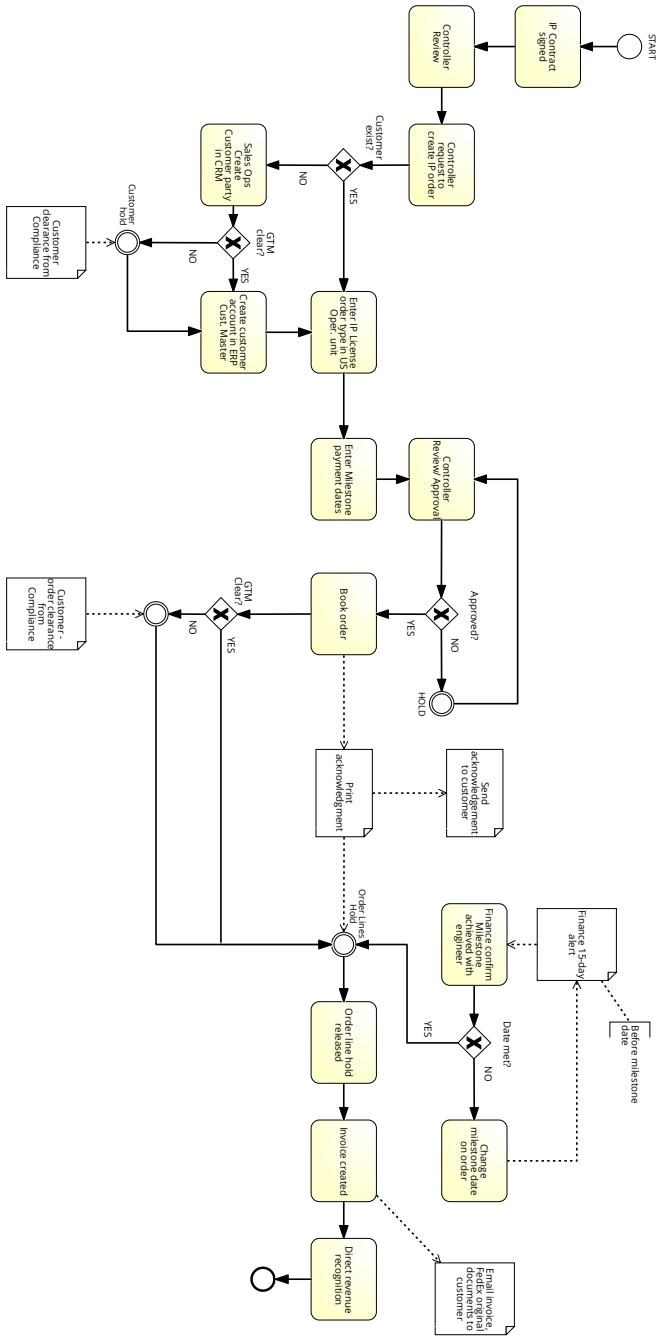

82.2 Description

Team Approved

82.3 Elements

Process elements

START

Start Event

IP Contract signed

Task

Controller Review

Task

Controller request to create IP order

Task

Customer exist?

Data-based Exclusive (XOR) Gateway

Sales Ops Create Customer party in CRM

Task

GTM clear?

Data-based Exclusive (XOR) Gateway

Customer hold

Intermediate Event

Data objects: Customer clearance from Compliance

Create customer account in ERP Cust. Master

Task

Enter IP License order type in US Oper. unit

Task

Enter Milestone payment dates

Task

Controller Review/ Approval

Task

Approved?

Data-based Exclusive (XOR) Gateway

HOLD

Intermediate Event

Book order

Task

Data objects: Print acknowledgment

GTM Clear?

Data-based Exclusive (XOR) Gateway

Intermediate Event

Intermediate Event

Data objects: Customer - order clearance from Compliance

Finance confirm Milestone achieved with engineer

Task

Data objects: Finance 15-day alert

Date met?

Data-based Exclusive (XOR) Gateway

Change milestone date on order

Task

Data objects: Finance 15-day alert

Order Lines Hold

Intermediate Event

Data objects: Print acknowledgment

Order line hold released

Task

Invoice created

Task

Data objects: Email invoice, FedEx original documents to customer

Direct revenue recognition

Task

End Event

End Event

Data / IT-Systems

Customer - order clearance from Compliance

Data Object

Customer clearance from Compliance

Data Object

Email invoice, FedEx original documents to customer

Data Object

Finance 15-day alert

Data Object

Print acknowledgment

Data Object

Send acknowledgement to customer

Data Object

83 Lead Management in OSC (L3)

Diagram Type	Business Process Diagram (BPMN 2.0)
Path	Shared documents / Sub-Processes (L2) / Level 3 sub-processes
Author	Amber Barber
Revision Number	8
Last modified	May 18, 2016
Diagram Link	https://editor.signavio.com/p/editor?id=f1942ef939084b6d9f4a6b6bff7b74c4

83.1 Diagram

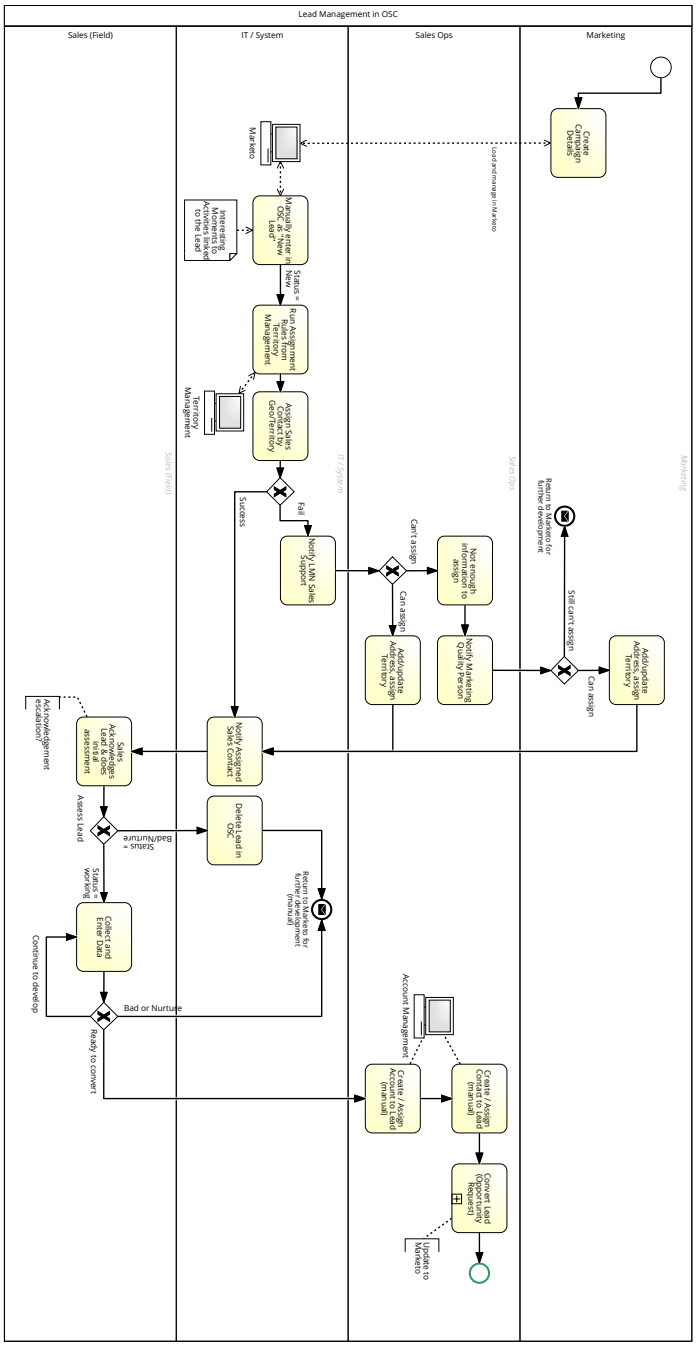

83.2 Description

Leads from Marketo submitted to OSC for management and conversion

83.3 Elements

Process elements

Start Event

Start Event

Organization units: Lead Management in OSC - Marketing

Create Campaign Details

Task

Organization units: Lead Management in OSC - Marketing

IT Systems: Marketo

Manually enter in OSC as "New Lead"

Task

Organization units: Lead Management in OSC - IT / System

Data objects: Interesting Moments to Activities linked to the Lead

IT Systems: Marketo

Run Assignment Rules from Territory Management

Task

Organization units: Lead Management in OSC - IT / System

IT Systems: Territory Management

Assign Sales Contact by Geo/Territory

Task

Organization units: Lead Management in OSC - IT / System

Data-based Exclusive (XOR) Gateway

Data-based Exclusive (XOR) Gateway

Organization units: Lead Management in OSC - IT / System

Notify LMN Sales Support

Task

Organization units: Lead Management in OSC - IT / System

Data-based Exclusive (XOR) Gateway

Data-based Exclusive (XOR) Gateway

Organization units: Lead Management in OSC - Sales Ops

Not enough information to assign

Task

Organization units: Lead Management in OSC - Sales Ops

Notify Marketing Quality Person

Task

Organization units: Lead Management in OSC - Sales Ops

Data-based Exclusive (XOR) Gateway

Data-based Exclusive (XOR) Gateway

Organization units: Lead Management in OSC - Marketing

Add/update Address, assign Territory

Task

Organization units: Lead Management in OSC - Marketing

Return to Marketo for further development

End Message Event

Organization units: Lead Management in OSC - Marketing

Add/update Address, assign Territory

Task

Organization units: Lead Management in OSC - Sales Ops

Notify Assigned Sales Contact

Task

Organization units: Lead Management in OSC - IT / System

Sales Acknowledges Lead & does initial assessment

Task

Organization units: Lead Management in OSC - Sales (Field)

Assess Lead

Data-based Exclusive (XOR) Gateway

Organization units: Lead Management in OSC - Sales (Field)

Delete Lead in OSC

Task

Organization units: Lead Management in OSC - IT / System

Collect and Enter Data

Task

Organization units: Lead Management in OSC - Sales (Field)

Data-based Exclusive (XOR) Gateway

Data-based Exclusive (XOR) Gateway

Organization units: Lead Management in OSC - Sales (Field)

Create / Assign Account to Lead (manual)

Task

Organization units: Lead Management in OSC - Sales Ops

IT Systems: Account Management

Create / Assign Contact to Lead (manual)

Task

Organization units: Lead Management in OSC - Sales Ops

IT Systems: Account Management

Convert Lead (Opportunity Request)

Collapsed Subprocess

Organization units: Lead Management in OSC - Sales Ops

Subprocess reference: Opportunity Request/Deal Registration (L3) (https://editor.signavio.com/p/model/837b0e79216f430abd4fae62929e3c87)

End Event

End Event

Organization units: Lead Management in OSC - Sales Ops

Return to Marketo for further development (manual)

End Message Event

Organization units: Lead Management in OSC - IT / System

Organization units

IT / System

Lane

Organization unit: Lead Management in OSC

Lead Management in OSC

Pool

Marketing

Lane

Organization unit: Lead Management in OSC

Sales (Field)

Lane

Organization unit: Lead Management in OSC

Sales Ops

Lane

Organization unit: Lead Management in OSC

Data / IT-Systems

Account Management

IT System

Organization unit: Lead Management in OSC - Sales Ops

Interesting Moments to Activities linked to the Lead

Data Object

Organization unit: Lead Management in OSC - IT / System

Marketo

IT System

Marketing campaign system. Links with OSC for Lead Management once moved to Sales.

Organization unit: Lead Management in OSC - IT / System

Dictionary entries: Marketo : Marketing campaign system. Links with OSC for Lead Management once moved to Sales.

Territory Management

IT System

Oracle Sales Cloud

Organization unit: Lead Management in OSC - IT / System

Dictionary entries: OSC: Oracle Sales Cloud

83.4 Linked dictionary entries

Marketo

Marketing campaign system. Links with OSC for Lead Management once moved to Sales.

OSC

Oracle Sales Cloud

84 Non-opportunity Quote (L4)

Diagram Type	Business Process Diagram (BPMN 2.0)
Path	Shared documents / Sub-Processes (L2) / Level 3 sub-processes / Level 4 sub-processes
Author	Amber Barber
Revision Number	3
Last modified	Jan 19, 2016
Diagram Link	https://editor.signavio.com/p/editor?id=321c9966ccb5426988a4d517b39b2c88

84.1 Diagram

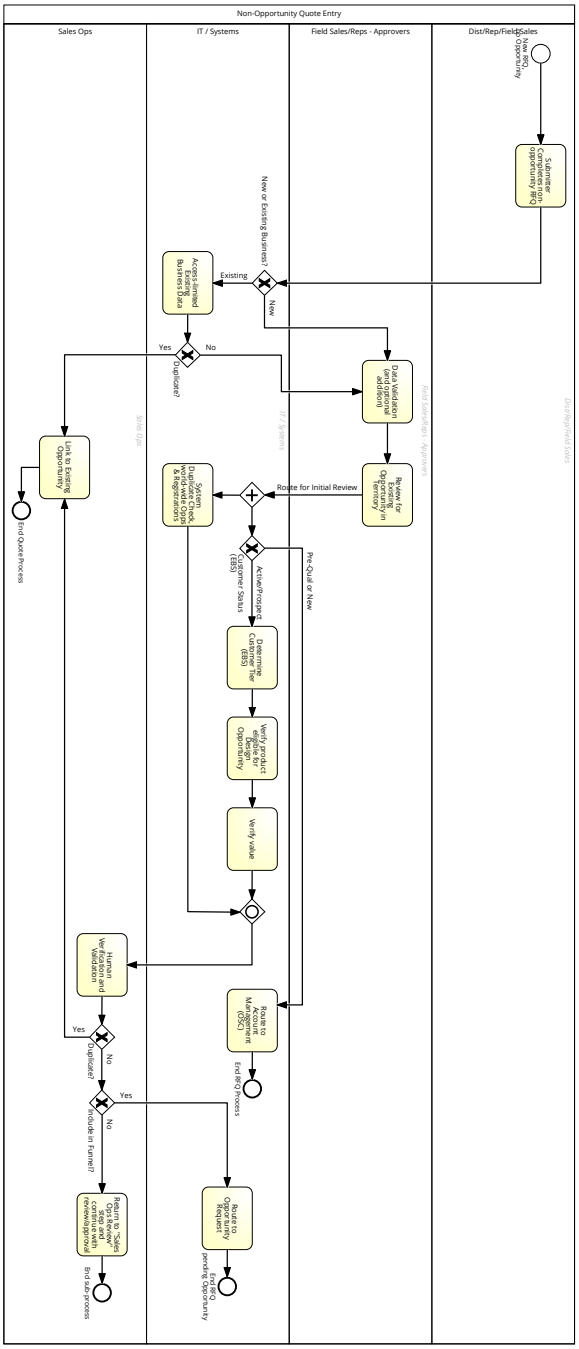

84.2 Description

We believe this is not allowed anymore

84.3 Elements

Process elements

New RFQ, no Opportunity

Start Event

Organization units: Non-Opportunity Quote Entry - Dist/Rep/Field Sales

Submitter Completes non-opportunity RFQ

Task

Organization units: Non-Opportunity Quote Entry - Dist/Rep/Field Sales

New or Existing Business?

Data-based Exclusive (XOR) Gateway

Organization units: Non-Opportunity Quote Entry - IT / Systems

Access-limited Existing Business Data

Task

Organization units: Non-Opportunity Quote Entry - IT / Systems

Duplicate?

Data-based Exclusive (XOR) Gateway

Organization units: Non-Opportunity Quote Entry - IT / Systems

Data Validation (and optional addition)

Task

Organization units: Non-Opportunity Quote Entry - Field Sales/Reps - Approvers

Review for Existing Opportunity in Territory

Task

Organization units: Non-Opportunity Quote Entry - Field Sales/Reps - Approvers

Parallel Gateway

Parallel Gateway

Organization units: Non-Opportunity Quote Entry - IT / Systems

Customer Status (EBS)

Data-based Exclusive (XOR) Gateway

Organization units: Non-Opportunity Quote Entry - IT / Systems

Determine Customer Tier (EBS)

Task

Organization units: Non-Opportunity Quote Entry - IT / Systems

Verify product eligible for Design Opportunity

Task

Organization units: Non-Opportunity Quote Entry - IT / Systems

Verify value

Task

Organization units: Non-Opportunity Quote Entry - IT / Systems

Route to Account Management (OSC)

Task

Organization units: Non-Opportunity Quote Entry - IT / Systems

End RFQ Process

End Event

Organization units: Non-Opportunity Quote Entry - IT / Systems

System Duplicate Check, world-wide Opps & Registrations

Task

Organization units: Non-Opportunity Quote Entry - IT / Systems

Inclusive Gateway

Inclusive Gateway

Organization units: Non-Opportunity Quote Entry - IT / Systems

Human Verification and Validation

Task

Organization units: Non-Opportunity Quote Entry - Sales Ops

Duplicate?

Data-based Exclusive (XOR) Gateway

Organization units: Non-Opportunity Quote Entry - Sales Ops

Include in Funnel?

Data-based Exclusive (XOR) Gateway

Organization units: Non-Opportunity Quote Entry - Sales Ops

Route to Opportunity Request

Task

Organization units: Non-Opportunity Quote Entry - IT / Systems

End RFQ pending Opportunity

End Event

Organization units: Non-Opportunity Quote Entry - IT / Systems

Return to "Sales Ops Review" step and continue with review/approval

Task

Organization units: Non-Opportunity Quote Entry - Sales Ops

End sub-process

End Event

Organization units: Non-Opportunity Quote Entry - Sales Ops

Link to Existing Opportunity

Task

Organization units: Non-Opportunity Quote Entry - Sales Ops

End Quote Process

End Event

Organization units: Non-Opportunity Quote Entry - Sales Ops

Organization units

Dist/Rep/Field Sales

Lane

Organization unit: Non-Opportunity Quote Entry

Field Sales/Reps - Approvers

Lane

Organization unit: Non-Opportunity Quote Entry

IT / Systems

Lane

Organization unit: Non-Opportunity Quote Entry

Non-Opportunity Quote Entry

Pool

AKA Distributor. Outside company that sells and represents Lattice products

Dictionary entries: Disti

Sales Ops

Lane

Organization unit: Non-Opportunity Quote Entry

84.4 Linked dictionary entries

Disti

AKA Distributor. Outside company that sells and represents Lattice products

85 Quote Approval (L4)

Diagram Type	Business Process Diagram (BPMN 2.0)
Path	Shared documents / Sub-Processes (L2) / Level 3 sub-processes / Level 4 sub-processes
Author	Amber Barber
Revision Number	2
Last modified	Dec 30, 2015
Diagram Link	https://editor.signavio.com/p/editor?id=a26f4fc211b841d98786fef998d44fd4

85.1 Diagram

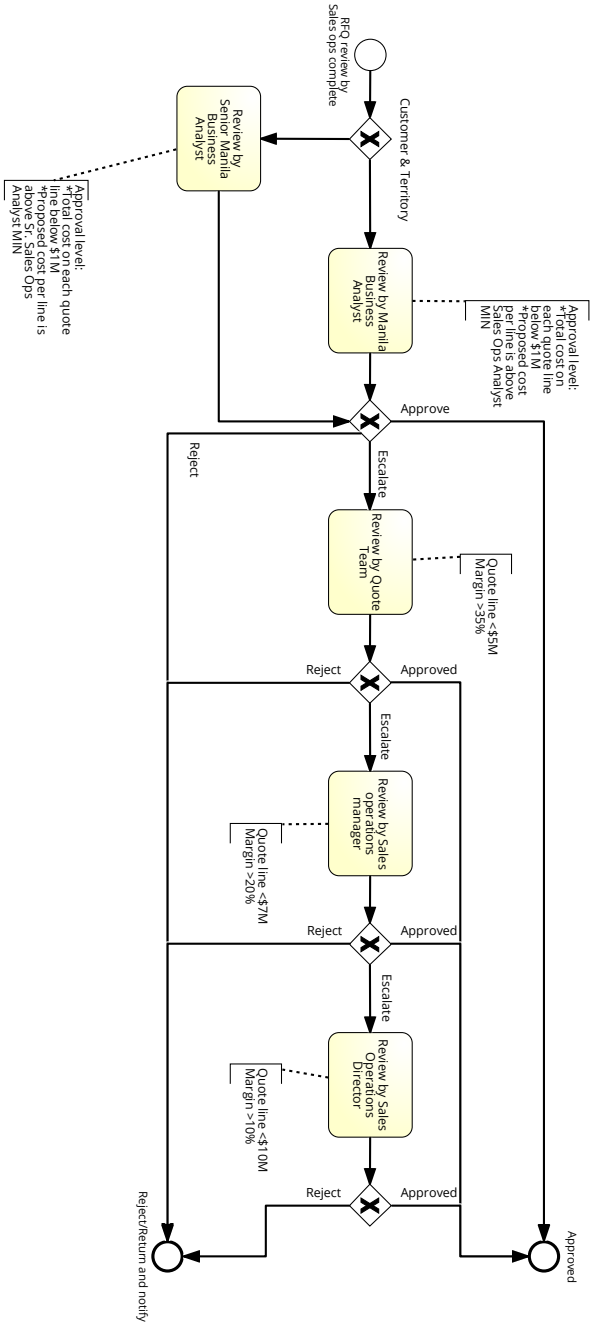

85.2 Elements

Process elements

RFQ review by Sales ops complete

Start Event

Customer & Territory

Data-based Exclusive (XOR) Gateway

Review by Manila Business Analyst

Task

Review by Senior Manila Business Analyst

Task

Data-based Exclusive (XOR) Gateway

Data-based Exclusive (XOR) Gateway

Review by Quote Team

Task

Data-based Exclusive (XOR) Gateway

Data-based Exclusive (XOR) Gateway

Review by Sales operations manager

Task

Data-based Exclusive (XOR) Gateway

Data-based Exclusive (XOR) Gateway

Review by Sales Operations Director

Task

Data-based Exclusive (XOR) Gateway

Data-based Exclusive (XOR) Gateway

Approved

End Event

Reject/Return and notify

End Event

86 Opportunity Management (L3)

Diagram Type	Business Process Diagram (BPMN 2.0)
Path	Shared documents / Sub-Processes (L2) / Level 3 sub-processes
Author	Amber Barber
Revision Number	24
Last modified	May 18, 2016
Diagram Link	https://editor.signavio.com/p/editor?id=55ca6cef5a60467487240aeb7d5ddbee

86.1 Diagram

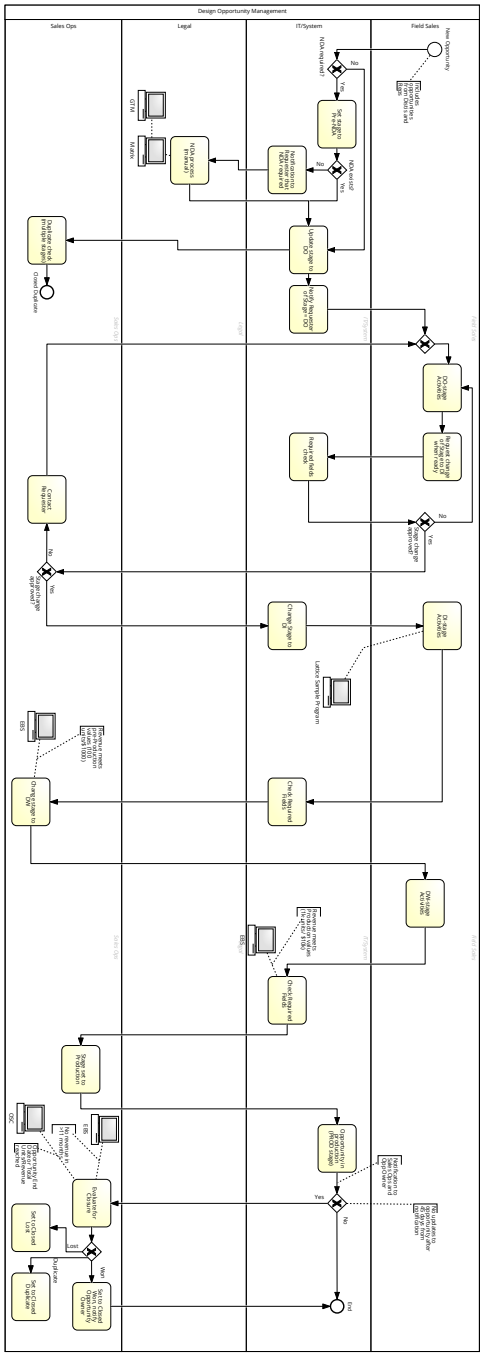

86.2 Description

Opportunity management from approval, NDA, DO-Di-DW-Prod stages and closures

86.3 Elements

Process elements

New Opportunity

Start Event

Organization units: Design Opportunity Management - Field Sales

NDA required?

Data-based Exclusive (XOR) Gateway

Organization units: Design Opportunity Management - IT/System

Set stage to Pre-NDA

Task

Organization units: Design Opportunity Management - IT/System

NDA exists?

Data-based Exclusive (XOR) Gateway

Organization units: Design Opportunity Management - IT/System

Notification to Requester that NDA required

Task

Organization units: Design Opportunity Management - IT/System

NDA process (manual)

Task

Organization units: Design Opportunity Management - Legal

IT Systems: Matrix

Update stage to DO

Task

Organization units: Design Opportunity Management - IT/System

Duplicate check (multiple stages)

Task

Organization units: Design Opportunity Management - Sales Ops

Closed Duplicate

End Event

Organization units: Design Opportunity Management - Sales Ops

Notify Requester of Stage = DO

Task

Organization units: Design Opportunity Management - IT/System

Data-based Exclusive (XOR) Gateway

Data-based Exclusive (XOR) Gateway

Organization units: Design Opportunity Management - Field Sales

DO-stage Activities

Task

Organization units: Design Opportunity Management - Field Sales

Request change of Stage to DI when ready

Task

Organization units: Design Opportunity Management - Field Sales

Required fields check

Task

Organization units: Design Opportunity Management - IT/System

Stage change approved?

Data-based Exclusive (XOR) Gateway

Organization units: Design Opportunity Management - Field Sales

Stage change approved?

Data-based Exclusive (XOR) Gateway

Organization units: Design Opportunity Management - Sales Ops

Change Stage to DI

Task

Organization units: Design Opportunity Management - IT/System

DI-stage Activities

Task

Organization units: Design Opportunity Management - Field Sales

IT Systems: Lattice Sample Program

Check Required Fields

Task

Organization units: Design Opportunity Management - IT/System

Change stage to DW

Task

Organization units: Design Opportunity Management - Sales Ops

IT Systems: EBS

DW-stage Activities

Task

Organization units: Design Opportunity Management - Field Sales

Check Required Fields

Task

Organization units: Design Opportunity Management - IT/System

IT Systems: EBS

Stage set to Production

Task

Organization units: Design Opportunity Management - Sales Ops

Opportunity in production (PROD stage)

Task

Organization units: Design Opportunity Management - IT/System

Data-based Exclusive (XOR) Gateway

Data-based Exclusive (XOR) Gateway

Organization units: Design Opportunity Management - IT/System

Evaluate for Closure

Task

Organization units: Design Opportunity Management - Sales Ops

IT Systems:

OSC

EBS

Data-based Exclusive (XOR) Gateway

Data-based Exclusive (XOR) Gateway

Organization units: Design Opportunity Management - Sales Ops

Set to Closed Won, notify Opportunity Owner

Task

Organization units: Design Opportunity Management - Sales Ops

End

End Event

Organization units: Design Opportunity Management - IT/System

Set to Closed Lost

Task

Organization units: Design Opportunity Management - Sales Ops

Set to Closed Duplicate

Task

Organization units: Design Opportunity Management - Sales Ops

Contact Requester

Task

Organization units: Design Opportunity Management - Sales Ops

Organization units

Design Opportunity Management

Pool

AKA Distributor. Outside company that sells and represents Lattice products

Dictionary entries: Disti

Field Sales

Lane

Organization unit: Design Opportunity Management

IT/System

Lane

The IT department is responsible for information technology in the organization.

Organization unit: Design Opportunity Management

Dictionary entries: IT-Department

Legal

Lane

Organization unit: Design Opportunity Management

Data / IT-Systems

Lattice Sample Program

IT System

3rd part site to management production samples

Organization unit: Design Opportunity Management - IT/System

Dictionary entries: Lattice Sample Program : 3rd part site to management production samples

OSC

IT System

Oracle Sales Cloud

Organization unit: Design Opportunity Management - Sales Ops

Dictionary entries: OSC: Oracle Sales Cloud

86.4 Linked dictionary entries

Disti

AKA Distributor. Outside company that sells and represents Lattice products

EBS

Oracle's e-Business supply chain management system. Also known as an ERP system.

GTM

Global Trade Management system, conducts the restricted parties screening for export controls.

IT-Department

The IT department is responsible for information technology in the organization.

Additional Attributes

Lattice Sample Program

3rd part site to management production samples

Matrix

Legal system that manages Customer NDAs

OSC

Oracle Sales Cloud

Sales Ops

Group comprising the customer service team, quote team, pricing team, and other sales managers

Additional Attributes

87 Opportunity Request/Deal Registration (L3)

Diagram Type	Business Process Diagram (BPMN 2.0)
Path	Shared documents / Sub-Processes (L2) / Level 3 sub-processes
Author	Amber Barber
Revision Number	9
Last modified	May 18, 2016
Diagram Link	https://editor.signavio.com/p/editor?id=837b0e79216f430abd4fae62929e3c87

87.1 Diagram

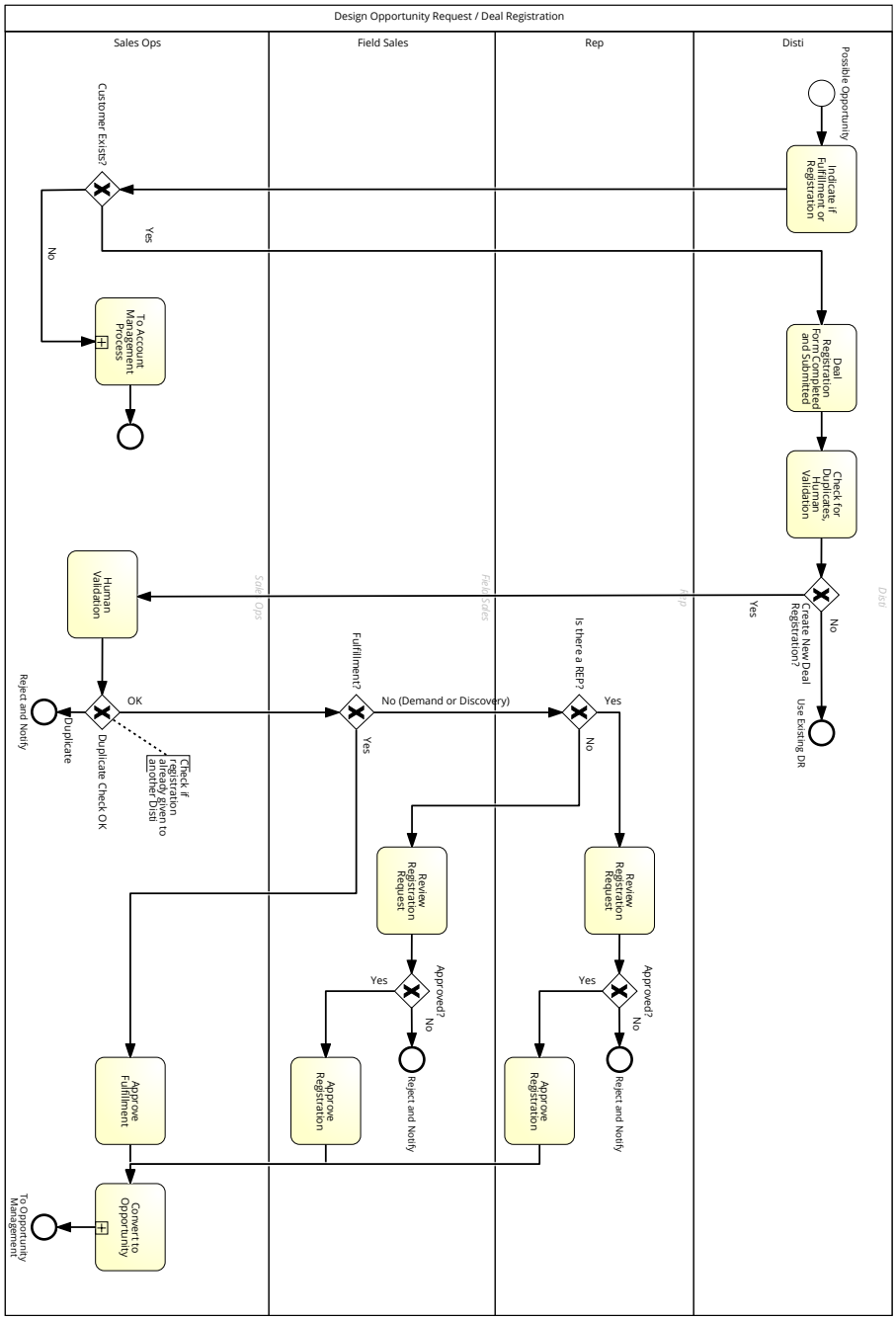

87.2 Description

Request for new deal registration from distributor, new opportunity from all

87.3 Elements

Process elements

Possible Opportunity

Start Event

Organization units: Design Opportunity Request / Deal Registration - Disti

Indicate if Fulfillment or Registration

Task

Organization units: Design Opportunity Request / Deal Registration - Disti

Customer Exists?

Data-based Exclusive (XOR) Gateway

Organization units: Design Opportunity Request / Deal Registration - Sales Ops

Deal Registration Form Completed and Submitted

Task

Organization units: Design Opportunity Request / Deal Registration - Disti

Check for Duplicates, Human Validation

Task

Organization units: Design Opportunity Request / Deal Registration - Disti

Create New Deal Registration?

Data-based Exclusive (XOR) Gateway

Organization units: Design Opportunity Request / Deal Registration - Disti

Use Existing DR

End Event

Organization units: Design Opportunity Request / Deal Registration - Disti

Human Validation

Task

Organization units: Design Opportunity Request / Deal Registration - Sales Ops

Duplicate Check OK

Data-based Exclusive (XOR) Gateway

Organization units: Design Opportunity Request / Deal Registration - Sales Ops

Fulfillment?

Data-based Exclusive (XOR) Gateway

Organization units: Design Opportunity Request / Deal Registration - Field Sales

Is there a REP?

Data-based Exclusive (XOR) Gateway

Organization units: Design Opportunity Request / Deal Registration - Rep

Review Registration Request

Task

Organization units: Design Opportunity Request / Deal Registration - Rep

Approved?

Data-based Exclusive (XOR) Gateway

Organization units: Design Opportunity Request / Deal Registration - Rep

Reject and Notify

End Event

Organization units: Design Opportunity Request / Deal Registration - Rep

Approve Registration

Task

Organization units: Design Opportunity Request / Deal Registration - Rep

Review Registration Request

Task

Organization units: Design Opportunity Request / Deal Registration - Field Sales

Approved?

Data-based Exclusive (XOR) Gateway

Organization units: Design Opportunity Request / Deal Registration - Field Sales

Reject and Notify

End Event

Organization units: Design Opportunity Request / Deal Registration - Field Sales

Approve Registration

Task

Organization units: Design Opportunity Request / Deal Registration - Field Sales

Approve Fulfillment

Task

Organization units: Design Opportunity Request / Deal Registration - Sales Ops

Convert to Opportunity

Collapsed Subprocess

Organization units: Design Opportunity Request / Deal Registration - Sales Ops

Subprocess reference: Opportunity Management (L3) (https://editor.signavio.com/p/model/55ca6cef5a60467487240aeb7d5ddbee)

To Opportunity Management

End Event

Organization units: Design Opportunity Request / Deal Registration - Sales Ops

Reject and Notify

End Event

Organization units: Design Opportunity Request / Deal Registration - Sales Ops

To Account Management Process

Collapsed Subprocess

Organization units: Design Opportunity Request / Deal Registration - Sales Ops

Subprocess reference: Account Management (L3) (https://editor.signavio.com/p/model/6ab501fd19734dc48c8cc33fb2ca082a)

End Event

End Event

Organization units: Design Opportunity Request / Deal Registration - Sales Ops

Organization units

Design Opportunity Request / Deal Registration

Pool

AKA Distributor. Outside company that sells and represents Lattice products

Dictionary entries: Disti

Disti

Lane

AKA Distributor. Outside company that sells and represents Lattice products

Organization unit: Design Opportunity Request / Deal Registration

Dictionary entries: Disti

Field Sales

Lane

Organization unit: Design Opportunity Request / Deal Registration

Rep

Lane

Organization unit: Design Opportunity Request / Deal Registration

Sales Ops

Lane

Organization unit: Design Opportunity Request / Deal Registration

87.4 Linked dictionary entries

Disti

AKA Distributor. Outside company that sells and represents Lattice products

88 Order - Manufacturing - Wafer Sale

Diagram Type	Business Process Diagram (BPMN 2.0)
Path	Shared documents / Sub-Processes (L2) / Level 3 sub-processes
Author	Amber Barber
Revision Number	2
Last modified	Apr 28, 2016
Diagram Link	https://editor.signavio.com/p/editor?id=1358fe80078a4fa9bfce4b8845ae966a

88.1 Diagram

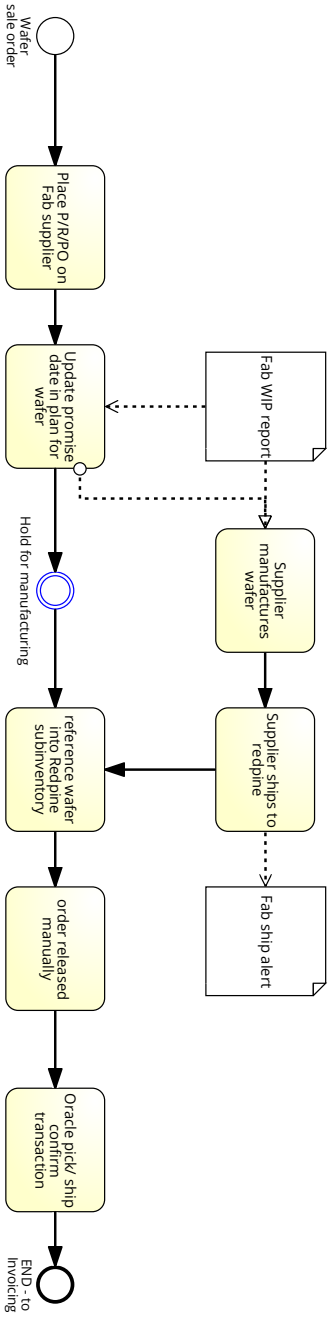

88.2 Description

Team Approved

88.3 Elements

Process elements

Wafer sale order

Start Event

Place P/R/PO on Fab supplier

Task

Update promise date in plan for wafer

Task

Data objects: Fab WIP report

Hold for manufacturing

Intermediate Event

Supplier manufactures wafer

Task

Data objects: Fab WIP report

Supplier ships to redpine

Task

Data objects: Fab ship alert

reference wafer into Redpine subinventory

Task

order released manually

Task

Oracle pick/ ship confirm transaction

Task

END - to Invoicing

End Event

Data / IT-Systems

Fab ship alert

Data Object

Fab WIP report

Data Object

89 Order Release

Diagram Type	Business Process Diagram (BPMN 2.0)
Path	Shared documents / Sub-Processes (L2) / Level 3 sub-processes
Author	Amber Barber

Revision Number	2
Last modified	Apr 19, 2016
Diagram Link	https://editor.signavio.com/p/editor?id=cdb9d96ea4bd4841ba900f37ab2afc27

89.1 Diagram

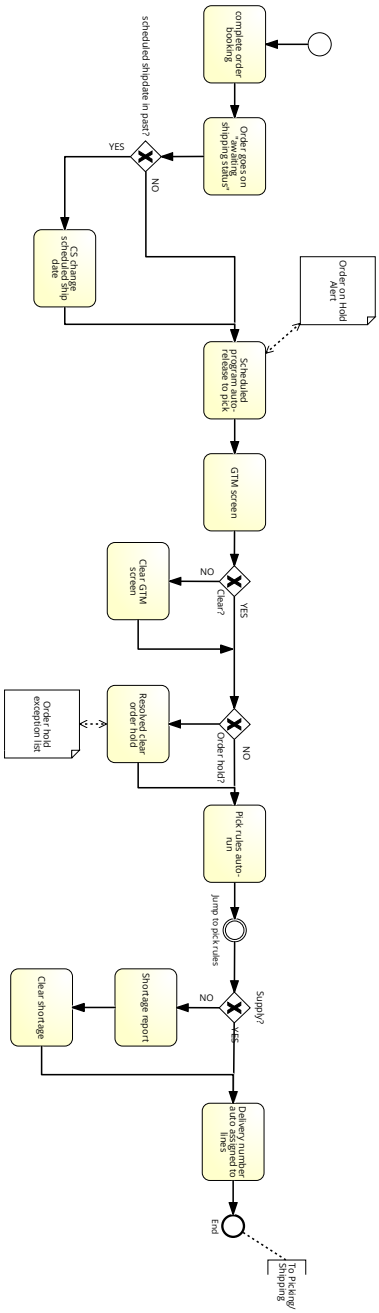

89.2 Description

Team Approved

89.3 Elements

Process elements

Start Event

Start Event

complete order booking

Task

Order goes on "awaiting shipping status"

Task

scheduled shipdate in past?

Data-based Exclusive (XOR) Gateway

CS change scheduled ship date

Task

Scheduled program auto-release to pick

Task

Data objects: Order on Hold Alert

GTM screen

Task

Clear?

Data-based Exclusive (XOR) Gateway

Order hold?

Data-based Exclusive (XOR) Gateway

Resolved clear order hold

Task

Data objects: Order hold exception list

Pick rules auto-run

Task

Jump to pick rules

Intermediate Event

Supply?

Data-based Exclusive (XOR) Gateway

Shortage report

Task

Clear shortage

Task

Delivery number auto assigned to lines

Task

End

End Event

Clear GTM screen

Task

Data / IT-Systems

Order hold exception list

Data Object

Order on Hold Alert

Data Object

90 PML Research and Develop Subprocess (L3)

Diagram Type	Business Process Diagram (BPMN 2.0)
Path	Shared documents / Sub-Processes (L2) / Level 3 sub-processes
Author	Amber Barber
Revision Number	4
Last modified	Jan 28, 2016
Diagram Link	https://editor.signavio.com/p/editor?id=7a11b2eb63294a57b45e42c0304dbf89

90.1 Diagram

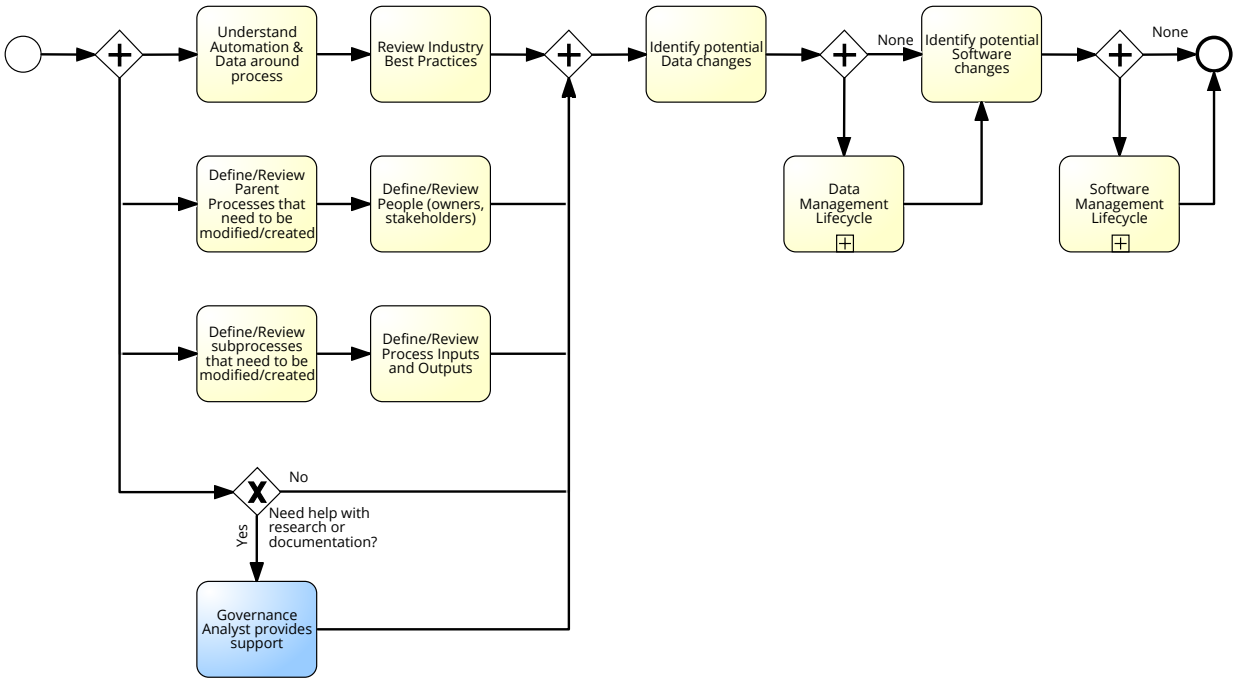

90.2 Elements

Process elements

Start Event

Start Event

Parallel Gateway

Parallel Gateway

Understand Automation & Data around process

Task

Review Industry Best Practices

Task

Define/Review Parent Processes that need to be modified/created

Task

Define/Review People (owners, stakeholders)

Task

Define/Review subprocesses that need to be modified/created

Task

Define/Review Process Inputs and Outputs

Task

Need help with research or documentation?

Data-based Exclusive (XOR) Gateway

Governance Analyst provides support

Task

Parallel Gateway

Parallel Gateway

Identify potential Data changes

Task

Parallel Gateway

Parallel Gateway

Data Management Lifecycle

Collapsed Subprocess

Subprocess reference: Data Management Lifecycle (https://editor.signavio.com/p/model/d44d2b395e024c14be7af7a4173d54bd)

Identify potential Software changes

Task

Parallel Gateway

Parallel Gateway

Software Management Lifecycle

Collapsed Subprocess

Subprocess reference: Software Management Lifecycle (https://editor.signavio.com/p/model/ea6fd97da4d241e7a73be9c0268514d1)

End Event

End Event

91 Price List Generation

Diagram Type	Business Process Diagram (BPMN 2.0)
Path	Shared documents / Sub-Processes (L2) / Level 3 sub-processes
Author	Amber Barber
Revision Number	2
Last modified	May 18, 2016
Diagram Link	https://editor.signavio.com/p/editor?id=f08c829529044d78b6c48f719591f8a5

91.1 Diagram

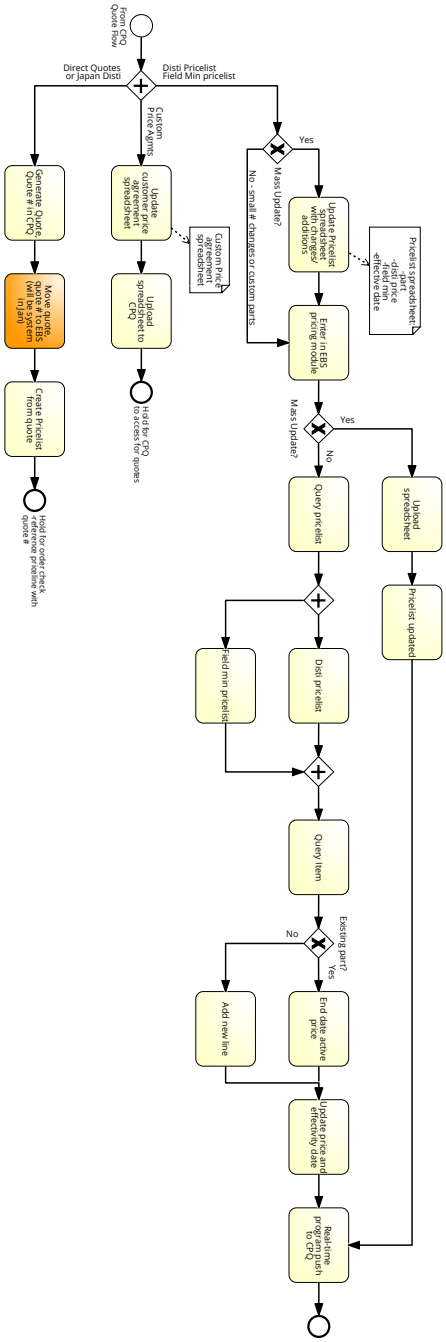

91.2 Description

Price lists and price agreement process across CPQ and EBS

91.3 Elements

Process elements

From CPQ Quote Flow

Start Event

Parallel Gateway

Parallel Gateway

Mass Update?

Data-based Exclusive (XOR) Gateway

Update Pricelist spreadsheet with changes/ additions

Task

Data objects: Pricelist spreadsheet: -part -disti price -field min -effective date

Enter in EBS pricing module

Task

Mass Update?

Data-based Exclusive (XOR) Gateway

Upload spreadsheet

Task

Pricelist updated

Task

Query pricelist

Task

Parallel Gateway

Parallel Gateway

Disti pricelist

Task

Field min pricelist

Task

Parallel Gateway

Parallel Gateway

Query Item

Task

Existing part?

Data-based Exclusive (XOR) Gateway

End date active price

Task

Add new line

Task

Update price and effectivity date

Task

Real-time program push to CPQ

Task

End Event

End Event

Update customer price agreement spreadsheet

Task

Data objects: Custom Price agreement spreadsheet

Upload spreadsheet to CPQ

Task

Hold for CPQ to access for quotes

End Event

Generate Quote, Quote # in CPQ

Task

Move quote, quote # to EBS (will be system in Jan)

Task

Create Pricelist from quote

Task

Hold for order check -reference priceline with quote #

End Event

Data / IT-Systems

Custom Price agreement spreadsheet

Data Object

Pricelist spreadsheet: -part -disti price -field min -effective date

Data Object

92 Quote Approval and DPA (L3)

Diagram Type	Business Process Diagram (BPMN 2.0)
Path	Shared documents / Sub-Processes (L2) / Level 3 sub-processes
Author	Amber Barber
Revision Number	15
Last modified	May 18, 2016
Diagram Link	https://editor.signavio.com/p/editor?id=2cbe4b9b04cf403994994d8a0f73d11c

92.1 Diagram

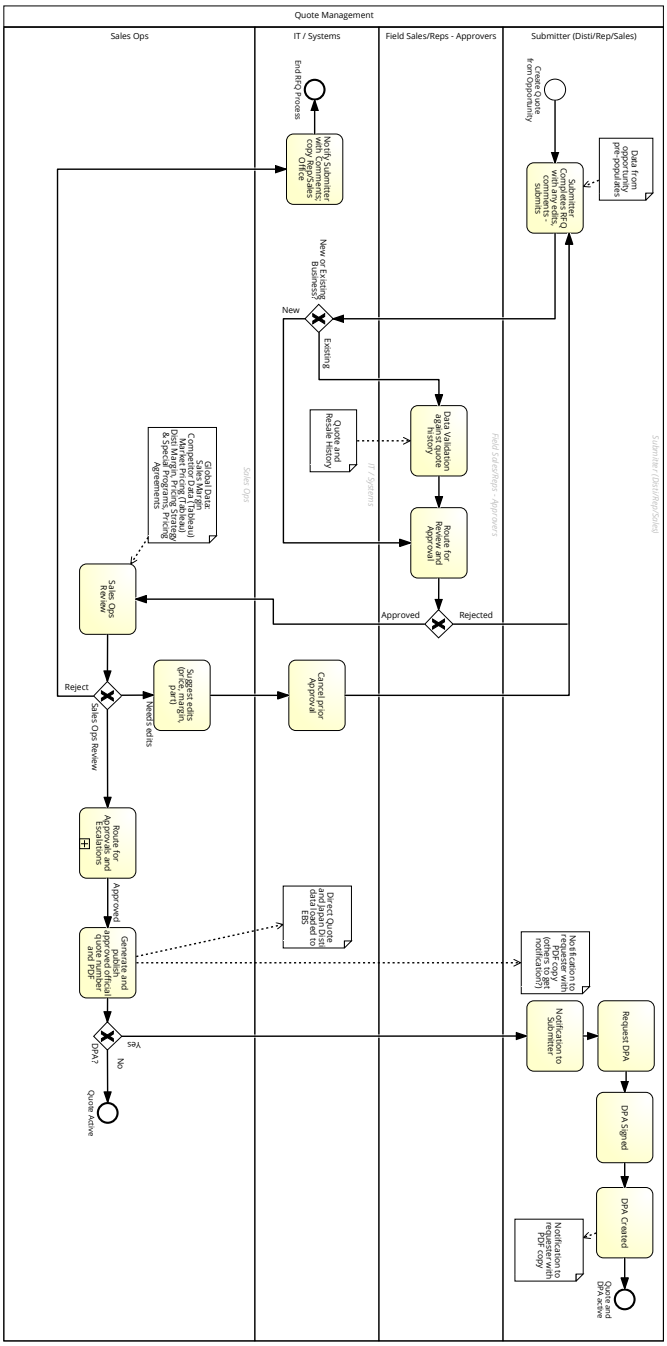

92.2 Description

Quote submission from opportunity, approvals, creation of DPA

92.3 Elements

Process elements

Create Quote from Opportunity

Start Event

Organization units: Quote Management - Submitter (Disti/Rep/Sales)

Submitter Completes RFQ with any edits, comments - submits

Task

Organization units: Quote Management - Submitter (Disti/Rep/Sales)

Data objects: Data from opportunity pre-populates

New or Existing Business?

Data-based Exclusive (XOR) Gateway

Organization units: Quote Management - IT / Systems

Data Validation against quote history

Task

Organization units: Quote Management - Field Sales/Reps - Approvers

Data objects: Quote and Resale History

Route for Review and Approval

Task

Organization units: Quote Management - Field Sales/Reps - Approvers

Data-based Exclusive (XOR) Gateway

Data-based Exclusive (XOR) Gateway

Organization units: Quote Management - Field Sales/Reps - Approvers

Sales Ops Review

Task

Organization units: Quote Management - Sales Ops

Data objects: Global Data: Sales Margin Competitor Data (Tableau) Market Pricing (Tableau) Disti Margin, Pricing Strategy & Special Programs, Pricing Agreements

Sales Ops Review

Data-based Exclusive (XOR) Gateway

Organization units: Quote Management - Sales Ops

Notify Submitter with Comments; copy Rep/Sales Office

Task

Organization units: Quote Management - IT / Systems

End RFQ Process

End Event

Organization units: Quote Management - IT / Systems

Suggest edits (price, margin, part)

Task

Organization units: Quote Management - Sales Ops

Cancel prior Approval

Task

Organization units: Quote Management - IT / Systems

Route for Approvals and Escalations

Collapsed Subprocess

Organization units: Quote Management - Sales Ops

Subprocess reference: Quote Approval (L4) (https://editor.signavio.com/p/model/a26f4fc211b841d98786fef998d44fd4)

Generate and publish approved official quote number and PDF

Task

Organization units: Quote Management - Sales Ops

Data objects:

Notification to requester with PDF copy (others to get notification?)

Direct Quote and Japan Disti data loaded to EBS

DPA?

Data-based Exclusive (XOR) Gateway

Organization units: Quote Management - Sales Ops

Notification to Submitter

Task

Organization units: Quote Management - Submitter (Disti/Rep/Sales)

Request DPA

Task

Organization units: Quote Management - Submitter (Disti/Rep/Sales)

DPA Signed

Task

Organization units: Quote Management - Submitter (Disti/Rep/Sales)

DPA Created

Task

Organization units: Quote Management - Submitter (Disti/Rep/Sales)

Data objects: Notification to requester with PDF copy

Quote and DPA active

End Event

Organization units: Quote Management - Submitter (Disti/Rep/Sales)

Quote Active

End Event

Organization units: Quote Management - Sales Ops

Organization units

Field Sales/Reps - Approvers

Lane

Organization unit: Quote Management

IT / Systems

Lane

Organization unit: Quote Management

Quote Management

Pool

AKA Distributor. Outside company that sells and represents Lattice products

Dictionary entries: Disti

Submitter (Disti/Rep/Sales)

Lane

Organization unit: Quote Management

Data / IT-Systems

Data from opportunity pre-populates

Data Object

Organization unit: Quote Management - Submitter (Disti/Rep/Sales)

Direct Quote and Japan Disti data loaded to EBS

Data Object

Organization unit: Quote Management - IT / Systems

Global Data: Sales Margin Competitor Data (Tableau) Market Pricing (Tableau) Disti Margin, Pricing Strategy & Special Programs, Pricing Agreements

Data Object

Organization unit: Quote Management - Sales Ops

Notification to requester with PDF copy

Data Object

Organization unit: Quote Management - Submitter (Disti/Rep/Sales)

Notification to requester with PDF copy (others to get notification?)

Data Object

Organization unit: Quote Management - Submitter (Disti/Rep/Sales)

Quote and Resale History

Data Object

Organization unit: Quote Management - IT / Systems

92.4 Linked dictionary entries

Disti

AKA Distributor. Outside company that sells and represents Lattice products

Sales Ops

Group comprising the customer service team, quote team, pricing team, and other sales managers

Additional Attributes

93 Sales Quota Process (L3)

Diagram Type	Business Process Diagram (BPMN 2.0)
Path	Shared documents / Sub-Processes (L2) / Level 3 sub-processes
Author	Amber Barber
Revision Number	3
Last modified	May 18, 2016
Diagram Link	https://editor.signavio.com/p/editor?id=e6455ad0115c40c6983b4bb80c9b2233

93.1 Diagram

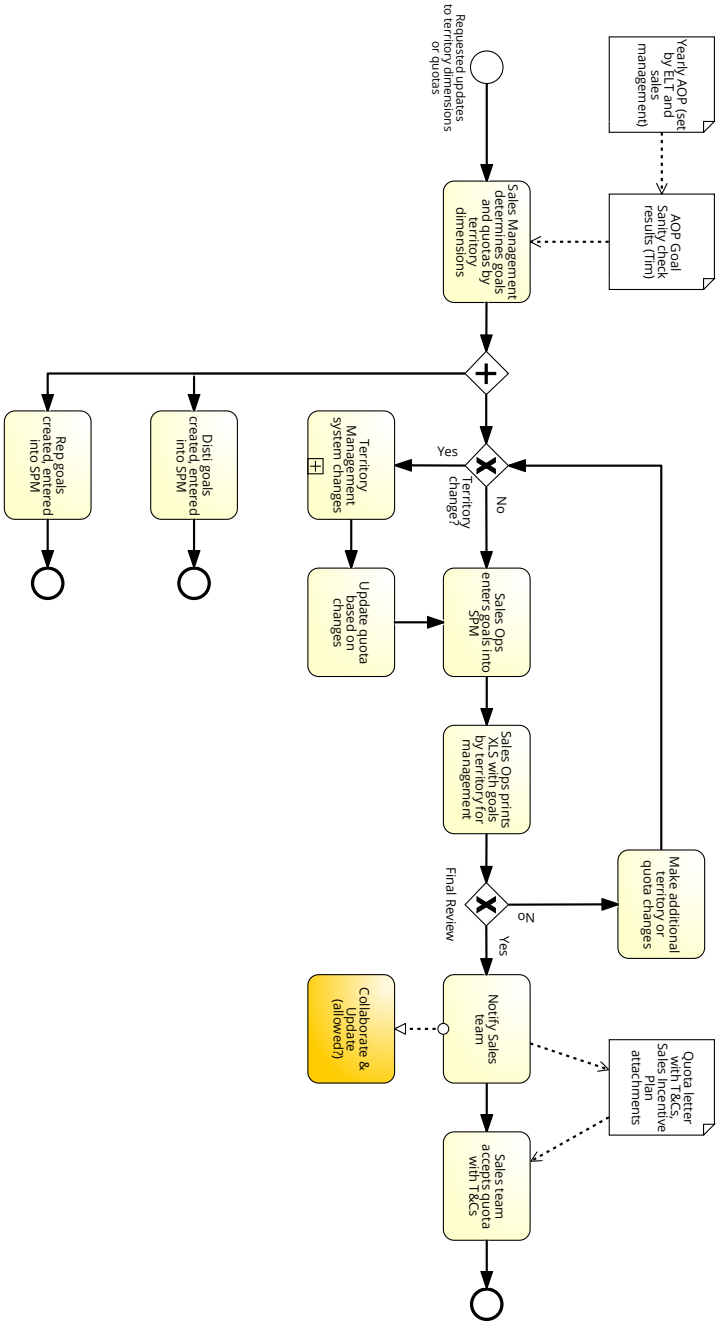

93.2 Description

Lacks system details

93.3 Elements

Process elements

Requested updates to territory dimensions or quotas

Start Event

Sales Management determines goals and quotas by territory dimensions

Task

Data objects: AOP Goal Sanity check results (Tim)

Parallel Gateway

Parallel Gateway

Territory change?

Data-based Exclusive (XOR) Gateway

Territory Management system changes

Collapsed Subprocess

Update quota based on changes

Task

Sales Ops enters goals into SPM

Task

Sales Ops prints XLS with goals by territory for management

Task

Final Review

Data-based Exclusive (XOR) Gateway

Make additional territory or quota changes

Task

Notify Sales team

Task

Data objects: Quota letter with T&Cs, Sales Incentive Plan attachments

Sales team accepts quota with T&Cs

Task

Data objects: Quota letter with T&Cs, Sales Incentive Plan attachments

End Event

End Event

Disti goals created, entered into SPM

Task

End Event

End Event

Rep goals created, entered into SPM

Task

End Event

End Event

Collaborate & Update (allowed?)

Task

Data / IT-Systems

AOP Goal Sanity check results (Tim)

Data Object

Quota letter with T&Cs, Sales Incentive Plan attachments

Data Object

Yearly AOP (set by ELT and sales management)

Data Object

94 Logistics Shipping and Receiving Process

Diagram Type	Business Process Diagram (BPMN 2.0)
Path	Shared documents / Sub-Processes (L2)
Author	Amber Barber
Revision Number	3
Last modified	May 26, 2016
Diagram Link	https://editor.signavio.com/p/editor?id=db50d82b38874b308ffc090f45b07fc0

94.1 Diagram

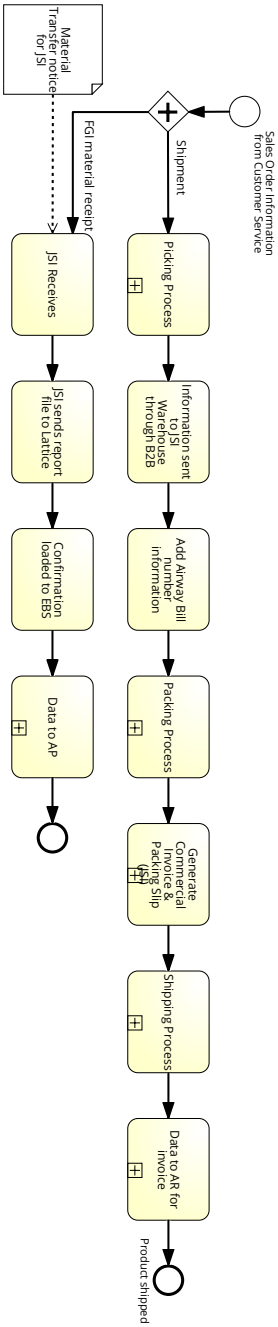

94.2 Description

Picking, Packing, Invoice generation and shipping process, including material receipt to JSI
Overall process for picking, packing and shipping of physical material. Also covers incoming FGI receipt of materials from subcons to JSI

94.3 Elements

Process elements

Sales Order Information from Customer Service

Start Event

Parallel Gateway

Parallel Gateway

Picking Process

Collapsed Subprocess

Subprocess reference: 4.20.30 Order Picking Process (https://editor.signavio.com/p/model/d1da4fb80faf45e3a58bc2dd964ac986)

Information sent to JSI Warehouse through B2B

Task

Add Airway Bill number information

Task

Packing Process

Collapsed Subprocess

Subprocess reference: 4.20.40 Order Packing Process (https://editor.signavio.com/p/model/36de1126108140c4952db2edf3e1d70f)

Generate Commercial Invoice & Packing Slip (JSI)

Collapsed Subprocess

Shipping Process

Collapsed Subprocess

Subprocess reference: 4.20.60 Order Shipping Process (https://editor.signavio.com/p/model/b6c5e95f86e647bbaf1ba605b090f868)

Data to AR for invoice

Collapsed Subprocess

Product shipped

End Event

JSI Receives

Task

Data objects: Material Transfer notice for JSI

JSI sends report file to Lattice

Task

Confirmation loaded to EBS

Task

Data to AP

Collapsed Subprocess

End Event

End Event

Data / IT-Systems

Material Transfer notice for JSI

Data Object

95 Material Review Board (MRB) Process

Diagram Type	Business Process Diagram (BPMN 2.0)
Path	Shared documents / Sub-Processes (L2)
Author	Amber Barber
Revision Number	3
Last modified	Mar 23, 2016
Diagram Link	https://editor.signavio.com/p/editor?id=78bf7c832ada45419c38d26715c98dac

95.1 Diagram

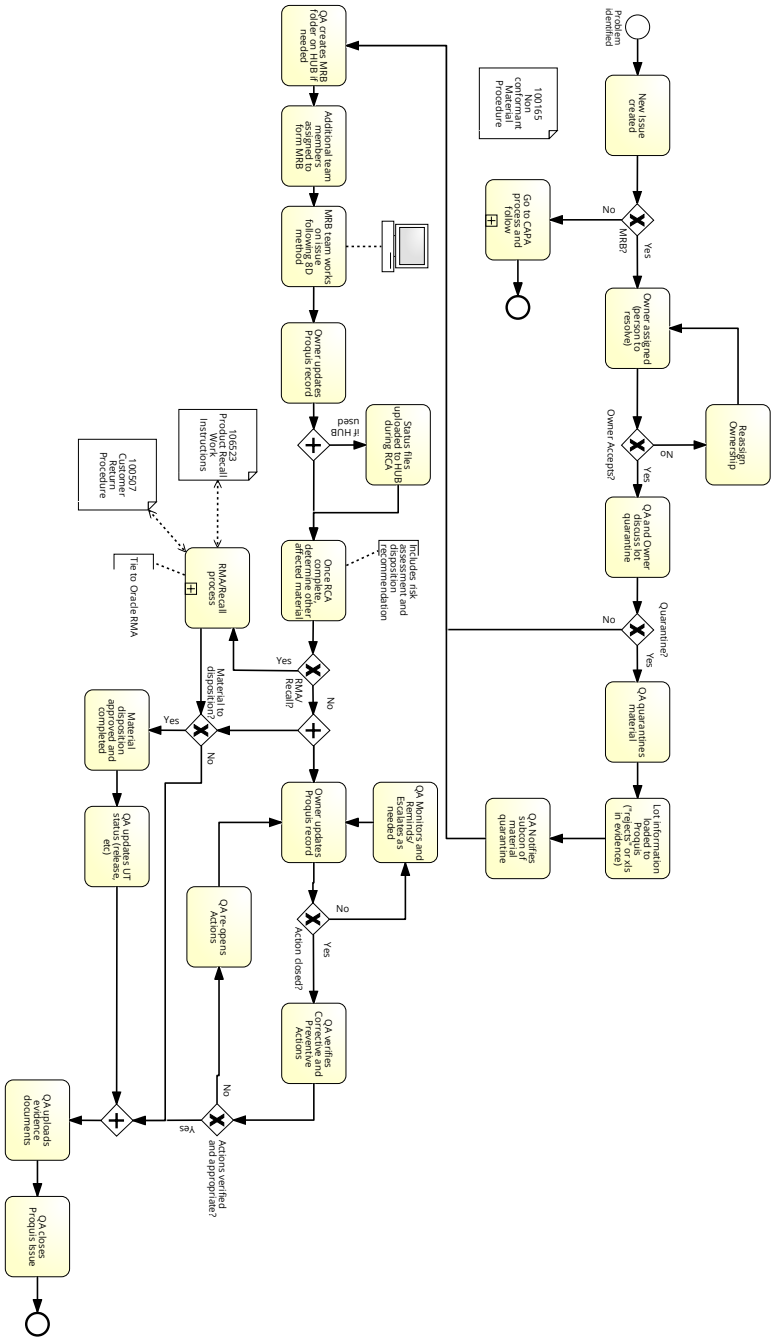

95.2 Description

QA management of nonconforming materials

95.3 Elements

Process elements

Problem identified

Start Event

New Issue created

Task

MRB?

Data-based Exclusive (XOR) Gateway

Owner assigned (person to resolve)

Task

Owner Accepts?

Data-based Exclusive (XOR) Gateway

Reassign Ownership

Task

QA and Owner discuss lot quarantine

Task

Quarantine?

Data-based Exclusive (XOR) Gateway

QA quarantines material

Task

Lot information loaded to Proquis ("rejects" or xls in evidence)

Task

QA Notifies subcon of material quarantine

Task

QA creates MRB folder on HUB if needed

Task

Additional team members assigned to form MRB

Task

MRB team works on issue following 8D method

Task

IT Systems: IT System

Owner updates Proquis record

Task

Parallel Gateway

Parallel Gateway

Status files uploaded to HUB during RCA

Task

Once RCA complete, determine other affected material

Task

RMA/ Recall?

Data-based Exclusive (XOR) Gateway

Parallel Gateway

Parallel Gateway

Owner updates Proquis record

Task

Action closed?

Data-based Exclusive (XOR) Gateway

QA Monitors and Reminds/ Escalates as needed

Task

QA verifies Corrective and Preventive Actions

Task

Actions verified and appropriate?

Data-based Exclusive (XOR) Gateway

QA re-opens Actions

Task

RMA/Recall process

Collapsed Subprocess

Data objects:

100507 Customer Return Procedure

106523 Product Recall Work Instructions

Material to disposition?

Data-based Exclusive (XOR) Gateway

Material disposition approved and completed

Task

QA updates UT status (release, etc)

Task

Parallel Gateway

Parallel Gateway

QA uploads evidence documents

Task

QA closes Proquis Issue

Task

End Event

End Event

Go to CAPA process and follow

Collapsed Subprocess

Subprocess reference: QA Corrective/ Preventive Action Process (https://editor.signavio.com/p/model/f1c5ea318387400f8dd83b4133bf1156)

End Event

End Event

Data / IT-Systems

100165 Non conformant Material Procedure

Data Object

100507 Customer Return Procedure

Data Object

106523 Product Recall Work Instructions

Data Object

IT System

IT System

96 Order Management Process

Diagram Type	Business Process Diagram (BPMN 2.0)
Path	Shared documents / Sub-Processes (L2)
Author	Amber Barber
Revision Number	7
Last modified	May 21, 2016
Diagram Link	https://editor.signavio.com/p/editor?id=34e6340d0d6c4118b11f4a66db8ae448

96.1 Diagram

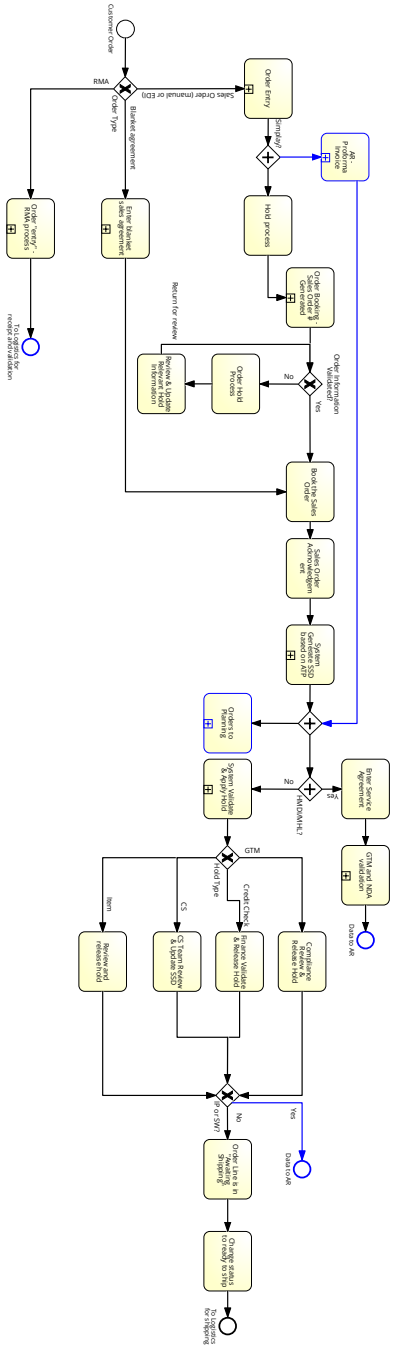

96.2 Description

Order Entry and Booking in EBS

96.3 Elements

Process elements

Customer Order

Start Event

Order Type

Data-based Exclusive (XOR) Gateway

Order Entry

Collapsed Subprocess

Subprocess reference: 4.5.10 Order Entry (https://editor.signavio.com/p/model/25934cba95244f34b7d372a2be8fd28b)

Simplay?

Parallel Gateway

AR - Proforma Invoice

Collapsed Subprocess

Hold process

Task

Order Booking - Sales Order # Generated

Collapsed Subprocess

Subprocess reference: 4.5.20 order booking and verification (https://editor.signavio.com/p/model/77d2ab88ff31435f84744f5c00999e26)

Order Information Validated?

Data-based Exclusive (XOR) Gateway

Order Hold Process

Task

Review & Update Relevant Hold Information

Task

Enter blanket sales agreement

Collapsed Subprocess

Book the Sales Order

Task

Sales Order Acknowledgement

Task

System Generate SSD based on ATP

Collapsed Subprocess

Subprocess reference: 4.5.20.10 order scheduling (https://editor.signavio.com/p/model/95edf84699a64b7cb477b18663f60830)

Parallel Gateway

Parallel Gateway

Orders to Planning

Collapsed Subprocess

HMDI/MHL?

Parallel Gateway

Enter Service Agreement

Task

GTM and NDA validation

Collapsed Subprocess

Data to AR

End Event

System Validate & Apply Hold

Collapsed Subprocess

Hold Type

Data-based Exclusive (XOR) Gateway

Compliance Review & Release Hold

Task

Finance Validate & Release Hold

Task

CS Team Review & Update SSD

Task

Review and release hold

Task

IP or SW?

Data-based Exclusive (XOR) Gateway

Order Line is in "Awaiting Shipping"

Task

Change status to ready to ship

Task

To Logistics for shipping

End Event

Data to AR

End Event

Order "entry" - RMA process

Collapsed Subprocess

Subprocess reference: 4.5.10.30 RMA Return Materials Disposition Process (https://editor.signavio.com/p/model/8adbe47323d747848a651cdd540245d6)

To Logistics for receipt and validation

End Event

97 PCN-PIT Process

Diagram Type	Business Process Diagram (BPMN 2.0)
Path	Shared documents / Sub-Processes (L2)
Author	Amber Barber
Revision Number	7
Last modified	May 20, 2016
Diagram Link	https://editor.signavio.com/p/editor?id=fe5fcad80e954839a502acd41dd7937d

97.1 Diagram

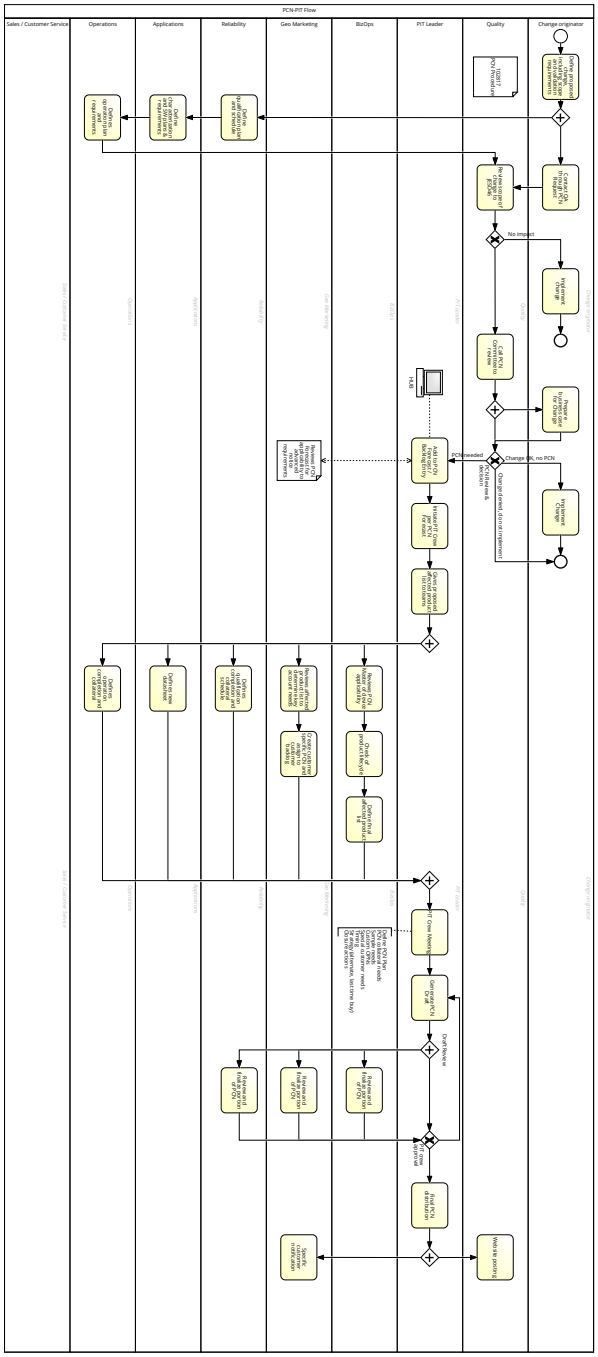

97.2 Description

Product Change Notification process, run by QA and the PIT crew

97.3 Elements

Process elements

Start Event

Start Event

Organization units: PCN-PIT Flow - Change originator

Define proposed change, including scope and validation requirements

Task

Organization units: PCN-PIT Flow - Change originator

Parallel Gateway

Parallel Gateway

Organization units: PCN-PIT Flow - Change originator

Contact QA through PCN Request

Task

Organization units: PCN-PIT Flow - Change originator

Define qualification plan and schedule

Task

Organization units: PCN-PIT Flow - Reliability

Define characterization and SW plans & requirements

Task

Organization units: PCN-PIT Flow - Applications

Defines operation plan and requirements

Task

Organization units: PCN-PIT Flow - Operations

Review scope of change to JESD46

Task

Organization units: PCN-PIT Flow - Quality

Data-based Exclusive (XOR) Gateway

Data-based Exclusive (XOR) Gateway

Organization units: PCN-PIT Flow - Quality

Implement change

Task

Organization units: PCN-PIT Flow - Change originator

End Event

End Event

Organization units: PCN-PIT Flow - Change originator

Call PCN Committee to review

Task

Organization units: PCN-PIT Flow - Quality

Parallel Gateway

Parallel Gateway

Organization units: PCN-PIT Flow - Quality

Prepare business case for Change

Task

Organization units: PCN-PIT Flow - Change originator

PCN Review & decision

Data-based Exclusive (XOR) Gateway

Organization units: PCN-PIT Flow - Quality

Add to PCN Forecast / Backlog Entry

Task

Organization units: PCN-PIT Flow - PIT Leader

Data objects: Reviews PCN Forecast for applicability to advanced notice requirements

IT Systems: HUB

Initiate PIT Crew per PCN Forecast

Task

Organization units: PCN-PIT Flow - PIT Leader

Gives proposed affected product list to teams

Task

Organization units: PCN-PIT Flow - PIT Leader

Parallel Gateway

Parallel Gateway

Organization units: PCN-PIT Flow - PIT Leader

Reviews PCN Master of device applicability

Task

Organization units: PCN-PIT Flow - BizOps

Check of product lifecycle

Task

Organization units: PCN-PIT Flow - BizOps

Define final affected product list

Task

Organization units: PCN-PIT Flow - BizOps

Reviews affected product list to determine key account needs

Task

Organization units: PCN-PIT Flow - Geo Marketing

Create customer specific PCN and assign to customer backlog

Task

Organization units: PCN-PIT Flow - Geo Marketing

Defines qualification completion and collateral schedule

Task

Organization units: PCN-PIT Flow - Reliability

Defines new datasheet

Task

Organization units: PCN-PIT Flow - Applications

Defines operation completion and collateral

Task

Organization units: PCN-PIT Flow - Operations

Parallel Gateway

Parallel Gateway

Organization units: PCN-PIT Flow - PIT Leader

PIT Crew Meeting

Task

Organization units: PCN-PIT Flow - PIT Leader

Generate PCN Draft

Task

Organization units: PCN-PIT Flow - PIT Leader

Draft Review

Parallel Gateway

Organization units: PCN-PIT Flow - PIT Leader

Review and finalize portion of PCN

Task

Organization units: PCN-PIT Flow - BizOps

Review and finalize portion of PCN

Task

Organization units: PCN-PIT Flow - Geo Marketing

Review and finalize portion of PCN

Task

Organization units: PCN-PIT Flow - Reliability

PIT crew approval

Data-based Exclusive (XOR) Gateway

Organization units: PCN-PIT Flow - PIT Leader

Final PCN distribution

Task

Organization units: PCN-PIT Flow - PIT Leader

Parallel Gateway

Parallel Gateway

Organization units: PCN-PIT Flow - PIT Leader

Website posting

Task

Organization units: PCN-PIT Flow - Quality

Specific customer notification

Task

Organization units: PCN-PIT Flow - Geo Marketing

Implement Change

Task

Organization units: PCN-PIT Flow - Change originator

End Event

End Event

Organization units: PCN-PIT Flow - Change originator

Organization units

Applications

Lane

Organization unit: PCN-PIT Flow

BizOps

Lane

Organization unit: PCN-PIT Flow

Change originator

Lane

Organization unit: PCN-PIT Flow

Geo Marketing

Lane

Organization unit: PCN-PIT Flow

Operations

Lane

Organization unit: PCN-PIT Flow

PCN-PIT Flow

Pool

PIT Leader

Lane

Organization unit: PCN-PIT Flow

Quality

Lane

Organization unit: PCN-PIT Flow

Reliability

Lane

Organization unit: PCN-PIT Flow

Sales / Customer Service

Lane

Organization unit: PCN-PIT Flow

Data / IT-Systems

102817 PCN Procedure

Data Object

Organization unit: PCN-PIT Flow - Quality

Reviews PCN Forecast for applicability to advanced notice requirements

Data Object

Organization unit: PCN-PIT Flow - Geo Marketing

97.4 Linked dictionary entries

HUB

The Lattice SharePoint-driven intranet. Comprised of department and team sites with libraries and lists under varying access control.

98 Planning Process

Diagram Type	Business Process Diagram (BPMN 2.0)
Path	Shared documents / Sub-Processes (L2)
Author	Amber Barber
Revision Number	4
Last modified	May 20, 2016
Diagram Link	https://editor.signavio.com/p/editor?id=a4b125a9a63e4f499d01dc7df89ecac3

98.1 Diagram

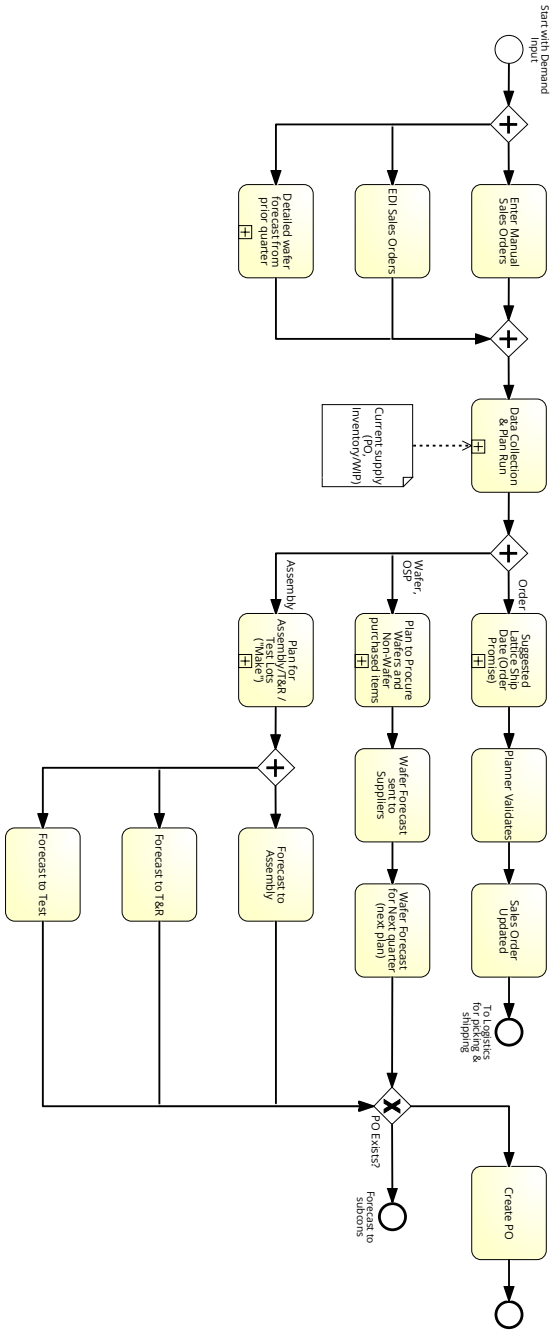

98.2 Description

EBS Planning and Order Promising

98.3 Elements

Process elements

Start with Demand Input

Start Event

Parallel Gateway

Parallel Gateway

Enter Manual Sales Orders

Task

EDI Sales Orders

Task

Detailed wafer forecast from prior quarter

Collapsed Subprocess

Subprocess reference: 2.11.20 Demand Forecast to Wafer Plan (https://editor.signavio.com/p/model/c205a9355e034033b8fc7521d69dde80)

Parallel Gateway

Parallel Gateway

Data Collection & Plan Run

Collapsed Subprocess

Data objects: Current supply (PO, Inventory/WIP)

Subprocess reference: 2.11.30 planning - data collections and ascp plan (https://editor.signavio.com/p/model/6de895b076a844eea363f04159ee744b)

Parallel Gateway

Parallel Gateway

Suggested Lattice Ship Date (Order Promise)

Collapsed Subprocess

Subprocess reference: 2.11.50 Planning Process - Shortages (https://editor.signavio.com/p/model/c3c826520bfc4671b29dee4f94df5d0e)

Planner Validates

Task

Sales Order Updated

Task

To Logistics for picking & shipping

End Event

Plan to Procure Wafers and Non-Wafer purchased items

Collapsed Subprocess

Subprocess reference: 2.11.60 Plan Suggest Buy - Wafers (https://editor.signavio.com/p/model/3ca434d4560f479099c61c1b95a72363)

Wafer Forecast sent to Suppliers

Task

Wafer Forecast for Next quarter (next plan)

Task

Plan for Assembly/T&R / Test Lots ("Make")

Collapsed Subprocess

Subprocess reference: 2.11.70 build plan for subcons (https://editor.signavio.com/p/model/936a114474e542f5b3878e496c213a31)

Parallel Gateway

Parallel Gateway

Forecast to Assembly

Task

Forecast to T&R

Task

Forecast to Test

Task

PO Exists?

Data-based Exclusive (XOR) Gateway

Forecast to subcons

End Event

Create PO

Task

End Event

End Event

Data / IT-Systems

Current supply (PO, Inventory/WIP)

Data Object

99 Procurement-Purchasing Process

Diagram Type	Business Process Diagram (BPMN 2.0)
Path	Shared documents / Sub-Processes (L2)
Author	Amber Barber
Revision Number	7
Last modified	May 24, 2016
Diagram Link	https://editor.signavio.com/p/editor?id=48807f849f9340fbbff87372cae12012

99.1 Diagram

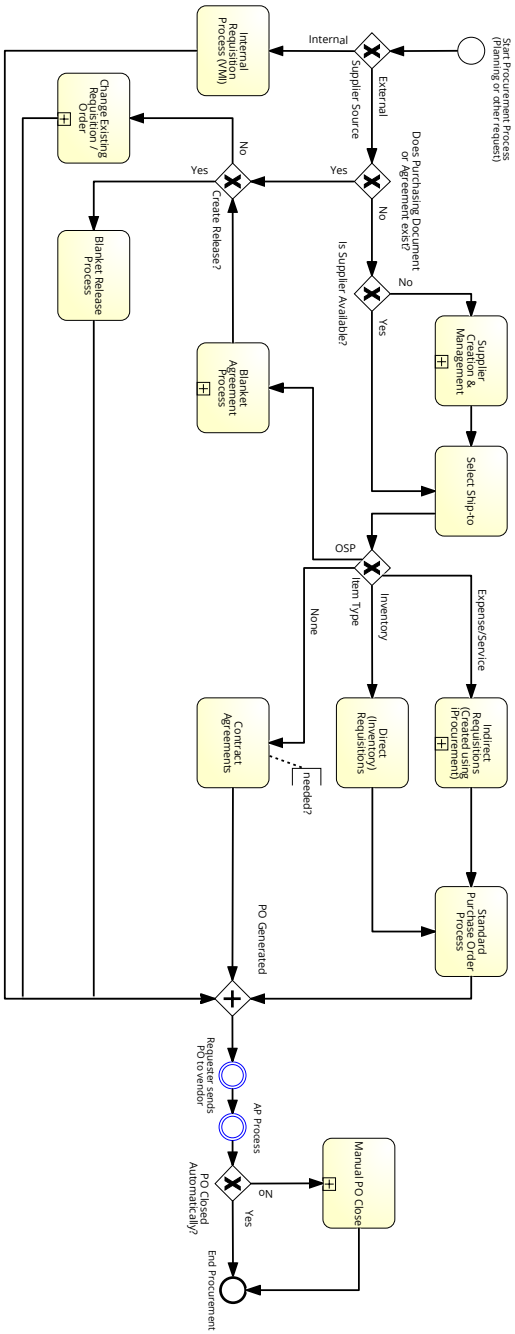

99.2 Description

EBS Internal and External Purchasing, including blanket agreements and contracts

99.3 Elements

Process elements

Start Procurement Process (Planning or other request)

Start Event

Supplier Source

Data-based Exclusive (XOR) Gateway

Does Purchasing Document or Agreement exist?

Data-based Exclusive (XOR) Gateway

Is Supplier Available?

Data-based Exclusive (XOR) Gateway

Supplier Creation & Management

Collapsed Subprocess

Subprocess reference: 3.3.30 Supplier Creation Process (https://editor.signavio.com/p/model/3fdd27cd908a414ab169753ea38ac225)

Select Ship-to

Task

Item Type

Data-based Exclusive (XOR) Gateway

Indirect Requisitions (Created using iProcurement)

Collapsed Subprocess

Subprocess reference: 3.3.60 Indirect Purchasing Requisitions (https://editor.signavio.com/p/model/c5a8a25f5d7f4d679474043733ed0694)

Direct (Inventory) Requisitions

Task

Standard Purchase Order Process

Task

Blanket Agreement Process

Collapsed Subprocess

Subprocess reference: 3.3.40 blanket purchase order updates (https://editor.signavio.com/p/model/35b03a2df15c4ef38edef7c4ff2ceb1a)

Contract Agreements

Task

Create Release?

Data-based Exclusive (XOR) Gateway

Blanket Release Process

Task

Change Existing Requisition / Order

Collapsed Subprocess

Subprocess reference: 3.3.20 Purchase Order Change Order Process (https://editor.signavio.com/p/model/a6854b63d3a340628664fe73b2a992da)

Internal Requisition Process (VMI)

Task

PO Generated

Parallel Gateway

Requester sends PO to vendor

Intermediate Event

AP Process

Intermediate Event

PO Closed Automatically?

Data-based Exclusive (XOR) Gateway

Manual PO Close

Collapsed Subprocess

End Procurement

End Event

100 QA Corrective/ Preventive Action Process

Diagram Type	Business Process Diagram (BPMN 2.0)
Path	Shared documents / Sub-Processes (L2)
Author	Amber Barber
Revision Number	7
Last modified	May 20, 2016
Diagram Link	https://editor.signavio.com/p/editor?id=f1c5ea318387400f8dd83b4133bf1156

100.1 Diagram

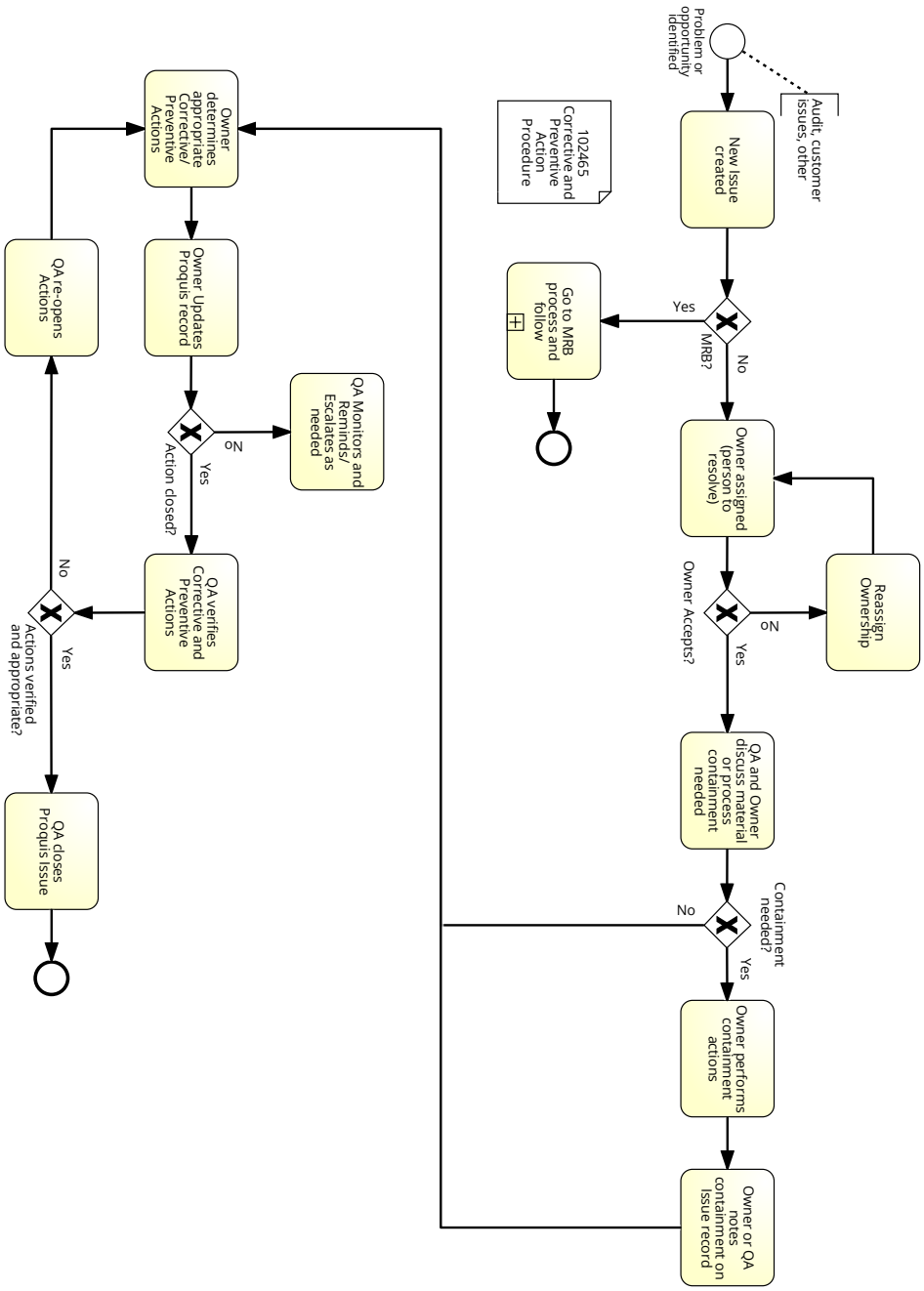

100.2 Description

High-level CAPA process including Proquis steps

100.3 Elements

Process elements

Problem or opportunity identified

Start Event

New Issue created

Task

MRB?

Data-based Exclusive (XOR) Gateway

Owner assigned (person to resolve)

Task

Owner Accepts?

Data-based Exclusive (XOR) Gateway

Reassign Ownership

Task

QA and Owner discuss material or process containment needed

Task

Containment needed?

Data-based Exclusive (XOR) Gateway

Owner performs containment actions

Task

Owner or QA notes containment on Issue record

Task

Owner determines appropriate Corrective/ Preventive Actions

Task

Owner Updates Proquis record

Task

Action closed?

Data-based Exclusive (XOR) Gateway

QA Monitors and Reminds/ Escalates as needed

Task

QA verifies Corrective and Preventive Actions

Task

Actions verified and appropriate?

Data-based Exclusive (XOR) Gateway

QA re-opens Actions

Task

QA closes Proquis Issue

Task

End Event

End Event

Go to MRB process and follow

Collapsed Subprocess

Subprocess reference: Material Review Board (MRB) Process (https://editor.signavio.com/p/model/78bf7c832ada45419c38d26715c98dac)

End Event

End Event

Data / IT-Systems

102465 Corrective and Preventive Action Procedure

Data Object

101 QA-CIS Customer Collateral

Diagram Type	Business Process Diagram (BPMN 2.0)
Path	Shared documents / Sub-Processes (L2)
Author	Amber Barber
Revision Number	2
Last modified	Mar 30, 2016
Diagram Link	https://editor.signavio.com/p/editor?id=608fb3e32cce4193ac0f3998e3180e68

101.1 Diagram

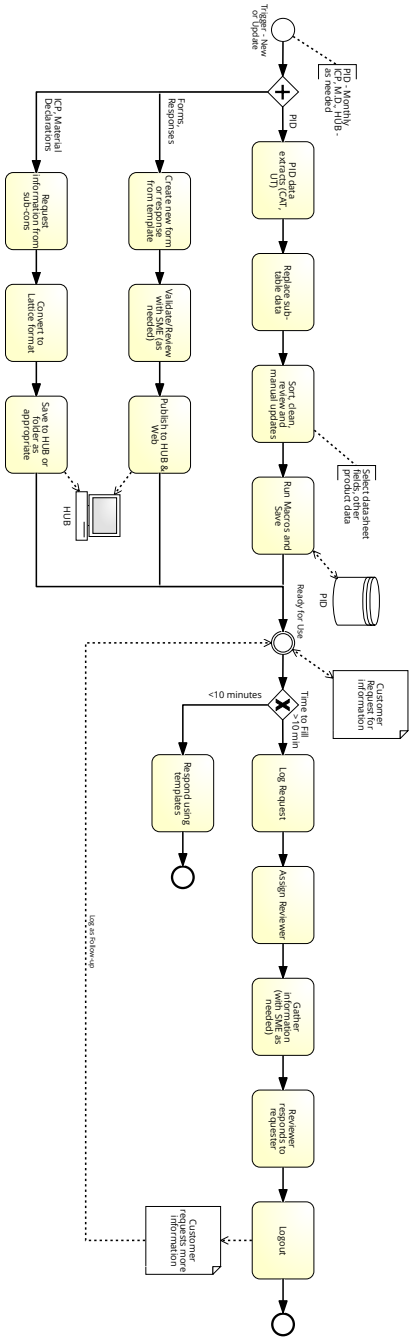

101.2 Elements

Process elements

Trigger - New or Update

Start Event

Parallel Gateway

Parallel Gateway

PID data extracts (CAT, UT)

Task

Replace sub-table data

Task

Sort, clean, review and manual updates

Task

Run Macros and Save

Task

Data objects: PID

Create new form or response from template

Task

Validate/Review with SME (as needed)

Task

Publish to HUB & Web

Task

IT Systems: HUB

Request information from sub-cons

Task

Convert to Lattice format

Task

Save to HUB or folder as appropriate

Task

IT Systems: HUB

Ready for Use

Intermediate Event

Data objects:

- Customer Request for information
- Customer requests more information

Time to Fill

Data-based Exclusive (XOR) Gateway

Log Request

Task

Assign Reviewer

Task

Gather information (with SME as needed)

Task

Reviewer responds to requester

Task

Logout

Task

Data objects: Customer requests more information

End Event

End Event

Respond using templates

Task

End Event

End Event

Data / IT-Systems

Customer Request for information

Data Object

Customer requests more information

Data Object

HUB

IT System

The Lattice SharePoint-driven intranet. Comprised of department and team sites with libraries and lists under varying access control.

Dictionary entries: HUB : The Lattice SharePoint-driven intranet. Comprised of department and team sites with libraries and lists under varying access control.

PID

Data Store

Product Information Database - a macro-driven excel file containing product attributes collected from Ultratrack and CAT and available for customer inquires

Dictionary entries: PID : Product Information Database - a macro-driven excel file containing product attributes collected from Ultratrack and CAT and available for customer inquires

101.3 Linked dictionary entries

HUB

The Lattice SharePoint-driven intranet. Comprised of department and team sites with libraries and lists under varying access control.

PID

Product Information Database - a macro-driven excel file containing product attributes collected from Ultratrack and CAT and available for customer inquires

102 Receiving in EBS

Diagram Type	Business Process Diagram (BPMN 2.0)
Path	Shared documents / Sub-Processes (L2)
Author	Amber Barber
Revision Number	1
Last modified	Feb 10, 2016
Diagram Link	https://editor.signavio.com/p/editor?id=f3277737f6c644c39c717f81470b5883

102.1 Diagram

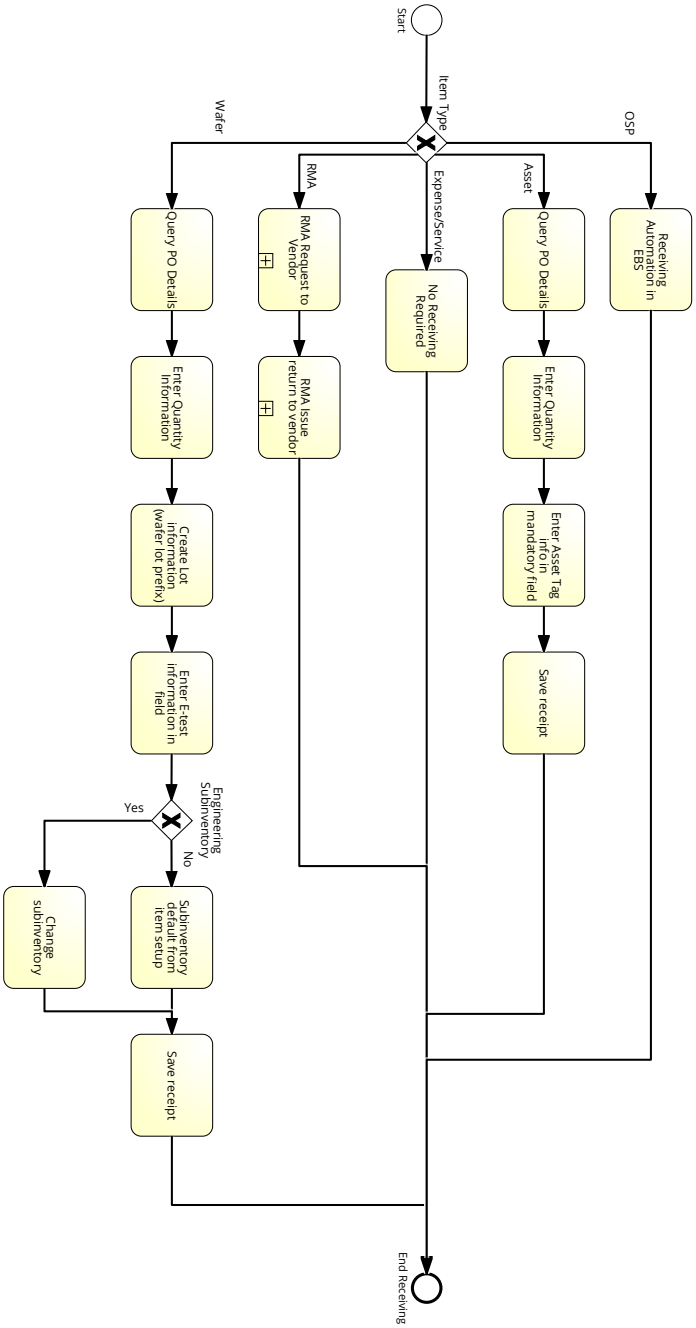

102.2 Description

Financial Receiving of OSP, wafers, assets, expenses, services, and RMA to vendors

102.3 Elements

Process elements

Start

Start Event

Item Type

Data-based Exclusive (XOR) Gateway

Receiving Automation in EBS

Task

Query PO Details

Task

Enter Quantity Information

Task

Enter Asset Tag info in mandatory field

Task

Save receipt

Task

No Receiving Required

Task

RMA Request to Vendor

Collapsed Subprocess

RMA Issue return to vendor

Collapsed Subprocess

Query PO Details

Task

Enter Quantity Information

Task

Create Lot information (wafer lot prefix)

Task

Enter E-test information in field

Task

Engineering Subinventory

Data-based Exclusive (XOR) Gateway

Subinventory default from item setup

Task

Change subinventory

Task

Save receipt

Task

End Receiving

End Event

103 Software Service Request

Diagram Type	Business Process Diagram (BPMN 2.0)
Path	Shared documents / Sub-Processes (L2)
Author	Amber Barber
Revision Number	6
Last modified	Feb 6, 2016
Diagram Link	https://editor.signavio.com/p/editor?id=2c44aef8450a4e44b49132150f5ae30c

103.1 Diagram

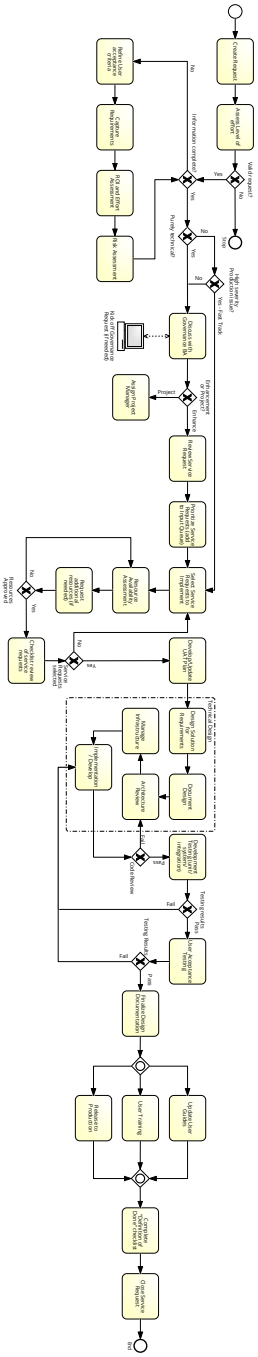

103.2 Description

IT service request process agnostic to system

103.3 Elements

Process elements

Start Event

Start Event

Create Request

Task

Assess Level of effort

Task

Valid request?

Data-based Exclusive (XOR) Gateway

Stop

End Event

Information complete?

Data-based Exclusive (XOR) Gateway

Purely technical?

Data-based Exclusive (XOR) Gateway

High severity Production issue?

Data-based Exclusive (XOR) Gateway

Discuss with Governance BA

Task

IT Systems: Kick off Governance Request (if needed)

Enhancement or Project?

Data-based Exclusive (XOR) Gateway

Review Service Request

Task

Prioritize Service Requests (add to Input Queue)

Task

Select Service Requests to Implement

Task

Resource Availability Assessment

Task

Request additional resources (if needed)

Task

Resources Approved

Data-based Exclusive (XOR) Gateway

Checklist review of service requests

Task

Service Requests selected

Data-based Exclusive (XOR) Gateway

Develop/Update UAT Plan

Task

Design Solution for Requirements

Task

Document Design

Task

Architecture Review

Task

Manage Infrastructure

Task

Implementation / Develop

Task

Code Review

Data-based Exclusive (XOR) Gateway

Development Testing (unit/ system/ integration)

Task

Testing results

Data-based Exclusive (XOR) Gateway

User Acceptance Testing

Task

Testing Results

Data-based Exclusive (XOR) Gateway

Finalize Design Documentation

Task

Inclusive Gateway

Inclusive Gateway

Update User Guides

Task

User Training

Task

Release to Production

Task

Inclusive Gateway

Inclusive Gateway

Complete "Definition of Done" checklist

Task

Close Service Request

Task

End

End Event

Assign Project Manager

Task

Refine User acceptance criteria

Task

Capture Requirements

Task

ROI and Effort Assessment

Task

Risk Assessment

Task

Data / IT-Systems

Kick off Governance Request (if needed)

IT System

104 Supply Chain Setups Process

Diagram Type	Business Process Diagram (BPMN 2.0)
Path	Shared documents / Sub-Processes (L2)
Author	Amber Barber
Revision Number	10
Last modified	May 2, 2016
Diagram Link	https://editor.signavio.com/p/editor?id=9a251b7e99d4416e8b963064a53e41b5

104.1 Diagram

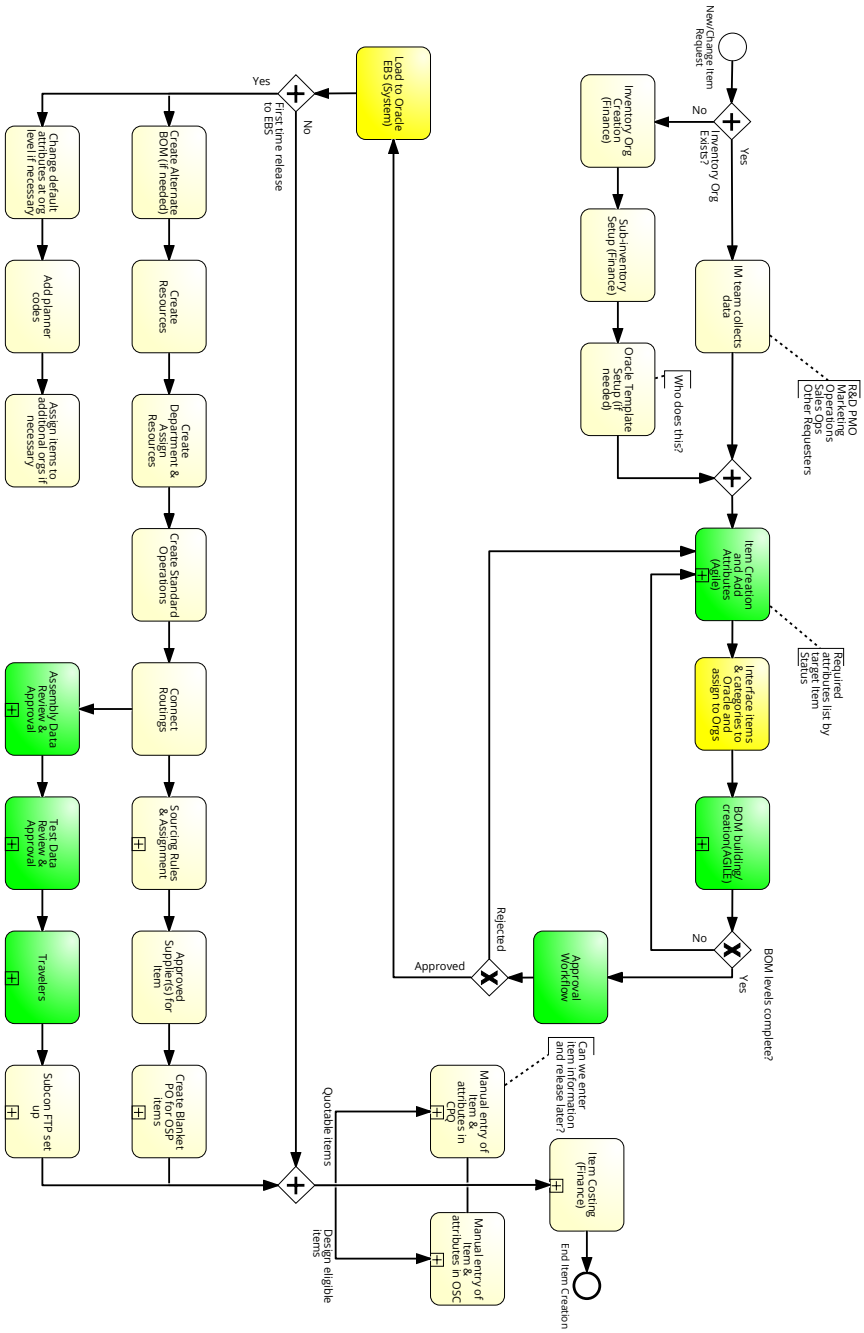

104.2 Description

1.24.20 Item Creation in Agile-push to EBS

104.3 Elements

Process elements

New/Change Item Request

Start Event

Inventory Org Exists?

Parallel Gateway

IM team collects data

Task

Inventory Org Creation (Finance)

Task

Sub-inventory Setup (Finance)

Task

Oracle Template Setup (if needed)

Task

Parallel Gateway

Parallel Gateway

Item Creation and Add Attributes (Agile)

Collapsed Subprocess

Interface items & categories to Oracle and assign to Orgs

Task

BOM building/ creation(AGILE)

Collapsed Subprocess

BOM levels complete?

Data-based Exclusive (XOR) Gateway

Approval Workflow

Task

Data-based Exclusive (XOR) Gateway

Data-based Exclusive (XOR) Gateway

Load to Oracle EBS (System)

Task

First time release to EBS

Parallel Gateway

Create Alternate BOM (if needed)

Task

Create Resources

Task

Create Department & Assign Resources

Task

Create Standard Operations

Task

Connect Routings

Task

Sourcing Rules & Assignment

Collapsed Subprocess

Approved Supplier(s) for Item

Task

Create Blanket PO for OSP items

Collapsed Subprocess

Subprocess reference: Procurement-Purchasing Process (https://editor.signavio.com/p/model/48807f849f9340fbbff87372cae12012)

Assembly Data Review & Approval

Collapsed Subprocess

Test Data Review & Approval

Collapsed Subprocess

Travelers

Collapsed Subprocess

Subcon FTP set up

Collapsed Subprocess

Parallel Gateway

Parallel Gateway

Manual entry of Item & attributes in OSC

Collapsed Subprocess

Manual entry of Item & attributes in CPQ

Collapsed Subprocess

Item Costing (Finance)

Collapsed Subprocess

End Item Creation

End Event

Change default attributes at org level if necessary

Task

Add planner codes

Task

Assign items to additional orgs if necessary

Task