Diverging Diamond Interchange Analysis – A Planning Tool

by

Avijit Maji[1], Sabyasachee Mishra[2*], and Manoj K. Jha[3]

Abstract

Many traffic simulation software tools, such as Vissim, SimTraffic, Corsim, Synchro, and Dynasmart have emerged over the last decade and are widely used for analyzing capacity, delay, and level of service at intersections, ramps, and along arterial/freeway segments. While these tools have shown great promise, they are expensive and the data collection and input set-up is time consuming and resource intensive. Traffic engineers predominantly use one of those tools to analyze diverging diamond interchange (DDI), also known as double crossover diamond interchange. Developing a simulation model and performing required analysis takes considerable time. Since it is not necessary to obtain detail traffic operational analysis of a DDI while interchange alternatives are being developed, a quick and easy evaluation procedure is warranted. In this paper, a critical lane volume (CLV) based DDI analysis methodology is developed which could be an appropriate tool to bridge the gap. In this methodology, two intersection or nodes of a DDI, where through traffic movements along the arterial cross each other, are considered crucial. Understanding of the crossover movements, ramp movements, and coordination of traffic movements between the two nodes and lane configuration are used in developing the methodology. Critical movements are analyzed, compared and logically added to obtain the CLV of the two nodes. The obtained CLV is used in deriving the level of service of the two intersections in a DDI. The paper describes the mathematical formulation and analysis procedure to evaluate a DDI. Two real-world DDIs are analyzed using the developed method and compared with simulation results for reliability and accuracy.

Keywords: Diverging diamond interchange, double crossover diamond interchange, critical lane volume, conflict points, intersection capacity, lane utilization factor and level of service.

[1] Transportation Design Engineer, Maryland State Highway Administration, 7491 Connelley Drive, Hanover, MD 21076, P:+1-410-372-7068, Email: avijit.maji@gmail.com

[2] * Research Assistant Professor, National Center for Smart Growth Research and Education
University of Maryland, College Park, MD 20741, P:+1-301-405-9424, Email: mishra@umd.edu (Corresponding Author)

[3] Professor and Director, Center for Advanced Transportation and Infrastructure Engineering Research, Department of Civil Engineering, Morgan State University, 1700 East Cold Spring Lane, Baltimore, MD 21251, P: +1-443- 885-1446, Email: manoj.jha@morgan.edu

1. Introduction

Diverging diamond interchange (DDI) design is an innovative interchange design, which is gaining momentum in the United States. So far, about ten such interchanges are constructed and many more locations are under consideration. These days state agencies consider DDI design as one of the viable interchange alternatives. It is easy and cost effective to convert a failing diamond interchange to a DDI. Also, the simplified two-phase signal system with short cycle length makes DDI one of the popular choices. The two intersections at either end of a DDI are crucial for traffic operations. At these intersections or crossover nodes, the opposing traffic movement along an arterial crosses each other. This crossover enables drivers to drive on the opposite side of the roadway between the two interchange node points. Being on the opposite side of the roadway allow the left turn movements, from the ramp to the arterial and from the arterial to the ramp, operate free, without being impeded by opposing through movement.

Often, traffic engineers consider traffic simulation as the preferred tool to analyze a DDI. Traffic simulation requires extensive effort, time and skill. During project planning, performing traffic simulation to determine whether or not DDI is a viable option could be cost prohibitive. On the other hand, analysis based on the Critical Lane Volume (CLV) methodology is a simple and easy to use evaluation procedure, which can determine the overall performance of the interchange in a short time. This method is cost effective and can be used during highway project planning. Lane configuration, identification of the conflicting movements, and understanding of coordinated movements between the intersections are very important in estimating the CLV. In this paper a CLV based methodology is developed to analyze a DDI. The proposed methodology considers the lane configuration with a suitable Lane Use Factor (LUF) along with the critical combination of the conflicting movements at the crossover nodes in estimating the CLV of the two intersections within the interchange. The conflicting movements at those intersections include the crossover movements, merging movements from off-ramp to arterial, and merging movements at the beginning of the on-ramp. In the process, it also considers the interaction between the crossover nodes and the coordination of the critical movements. Overall, the developed methodology provides a quick but effective evaluation of DDI, which can be used as an evaluation tool during highway planning.

2. Literature Review

The literature review presented in this paper is not intended to be exhaustive, rather to cover researchers' and practitioners' findings on DDI traffic operations and analysis, and later focused upon the lacking areas for further improvement. This section is organized into following parts: (1) potential reduction in conflicts, (2) multi-faceted benefits, (3) design consideration, (4) critical lane volume consideration, (5) experience in the United States, and (6) literature review summary and focus on proposed research.

2.1 Reduction of Potential Conflict

A Federal Highway Administration (FHWA) study on grade separated interchanges states that DDI is different from a conventional interchange as it combines left-turning traffic with through traffic (Bared and Don, 2010). The purpose of DDI design is to accommodate left-turning movements onto arterials and limited-access highways while eliminating the need for a left-turn bay and signal phase at the signalized ramp terminals. With adequate DDI configuration, the signal control phasing is designed such that vehicles are required to stop at only one of the signals along the arterial road, thereby eliminating the left-turn signal phase from the arterial

road and also the need for a ramp to store vehicles waiting to go left (Hughes et al., 2010). Most of the sources do not mention pedestrian safety explicitly. Those that do discuss the shorter crossings points required in the DDI, but also the fact that the number of crossings points increase with the DDI compared to other interchange concepts, though each of the crossings can be protected by a signal system without significant impacts to vehicular flow (Bared et al., 2007).

2.2 Multi-faceted Benefits

A DDI interchange can result into multi-faceted benefits. A DDI interchange has fewer conflict points compared to an equivalent diamond interchange, which can lead to fewer crashes (Chlewicki, 2003). The lower speed operation is because of the reverse curvature preceding the crossover intersections. These curves lead to reduced speed at the location of the crossing-path conflict points and are expected to lead to fewer crashes. In addition, these interchanges operate at lower speeds and are expected to result in reduced accident rate and severity (Chlewicki, 2003). A DDI has 14 crossing conflicts compared to 26 in a typical diamond interchange.

In terms of operational benefits as DDI's ability to combine left-turning traffic with through traffic, thereby eliminating the left-turn-only signal phase of a conventional interchange, this design results in a doubling of throughput of the left-turning arterial traffic and a reduction of total delay when compared with a conventional diamond interchange in high-volume scenarios. At high traffic volumes, the DDI shows about 50 percent less delay in seconds per vehicle than a conventional diamond (Hughes et al., 2010). Capacity benefits are best when directional traffic is unbalanced because the crossover allows only one movement at a time in comparison to conventional intersections. That means it will be advantageous when the volume of one opposing through movement is greater than the other, in which case DDI will be a desirable alternative (Bared et al., 2005). In terms of construction cost savings a recent project to convert an existing interchange into a DDI in Springfield, Missouri, saved $6.8 million compared to a single point urban interchange or widening of a conventional diamond design.

2.3 Design Consideration

A DDI interchange typically has two signalized intersections or nodes for left-turn crossovers. These intersections operate in two-phase signals, with each phase dedicated for the alternative opposing movements. Compared to conventional interchanges, the DDI interchange allows for relatively shorter cycle lengths at the signalized intersections, which reduce the lost time per cycle as a result (Esawey and Sayed, 2012). The DDI interchange design is suitable for interchanges with heavy ramp movements and relatively low through volumes on the arterial or directional unbalanced through volumes on the arterial. Signals on a DDI interchange may be fully actuated to minimize delay.

2.4 Critical Lane Volume Consideration

Critical movement analysis has been quite popular among state and county highway agencies in the last five decades for intersection planning and evaluation analysis. One of the earliest methodologies was proposed by Drew (1963). Since then there were a number of research papers published about the subsequent revisions to critical lane volume estimation (Drew, 1963). Most importantly there is a wide use of the Highway Capacity Manual (TRB, 2000) for critical lane volume estimation (TRB, 2000). Recognizing the role of critical lane volume in the intersection analysis, transportation researchers over the past three decades have conducted a variety of studies on this vital issue, ranging from observations at isolated intersections (Branston and Van

Zuylen, 1978; Bonneson, 1998; Bonneson and Messer, 1998; Prevedouros and Koga, 1996); on double left turns (Stokes et al., 1986); and progression signal control systems (Prevedouros and Jovanis, 1988). A general consensus is that the critical lane volume varies from location to location, and is a function of various factors, including intersection geometric features (Akcelik, 1981; Andrzej, 2000; Li and Prevedouros, 2002; Ruehr, 1988), signal control strategies (Ruehr, 1988; Stokes, 1988) and distribution of driving patterns and populations (Rouphail and Nevers, 2001). Following such concerns, the Highway Capacity Manual (HCM) has encouraged state and local municipalities to conduct field validation of their default saturation flow rates in intersection traffic analyses. Few studies such as San Mateo County's congestion management program (CMP, 2011) identified intersection level of service definitions and relationship with volume to capacity ratio (Table 1). Intersection capacities are also identified in the CMP study, which is shown in Table 2. A methodology for critical lane volume estimation for DDI's is yet to be contributed in the literature. If DDIs become popular, such a methodology is imperative for intersection analysis for truly reflecting the actual traffic condition due, understandably, to the variation of driving populations and their behavior discrepancies across different locations.

2.5 Experiences in the United States

Outside United States there are three locations where DDI is implemented (in France). In the United States, DDI has been constructed at over ten locations. The first ever DDI construction in United States is at the crossing of I-44 and U.S. Route 13 in Springfield, MO (Afshar et al., 2009). Other states which recently constructed DDIs include, Tennessee, Kentucky, Maryland, Georgia and Utah. A complete report on these DDIs in the U.S. can be found in the literature (Diverging Diamond, 2012). Because of unfamiliarity in the design, traffic operations analysis and uncertainty in driver's reaction to DDI a number of case studies are not found around the world (Parsons, 2007; Inman, 2007; Poorbaugh and Houston, 2006).

2.6 Analytical methods on DDI

Chlewicki (2003) analyzed delay at DDI and compared its performance to that of the conventional interchange under various demand levels. In a comparison with conventional diamond interchange this study found that the DDI design can reduce about 60 percent of the total intersection delay and stop delay, and the total number of stops in a DDI can be reduced to the 50 percent level under most volume conditions. Bared et al. (2005) investigated performance of DDIs at five volume levels and under two geometric conditions. Also, Bared and Don (2010) provided a performance comparison table for double crossover diamond interchange and conventional diamond interchange for different level of hypothetical volume. Their research results indicated that a DDI can outperform a conventional diamond interchange, particularly at high levels of volume. Chlewicki (2003) and Bared et al. (2005) used traffic simulation software such as Synchro/SimTraffic and VISSIM to perform the comparison study. These analysis processes require extensive time, expertise and resource and could be cost prohibitive during project planning when planners struggle to select viable alternatives for a failing interchange. So far, there are very limited literatures available on DDI analysis that can be used during project planning. Maji and Bhattacharya (2011) introduced the CLV based innovative intersection design and later Maji et al. (2012 and 2013) suggested a CLV based DDI analysis methodology. However, none of these suggested methods provided a detail analysis procedure for project planning studies. Regardless of the demand level, a DDI design can accommodate higher volumes for all movements, especially for left turn flows, than a conventional diamond

interchange. The literature shows that DDI studies are quite limited on exploring its benefits using microscopic traffic simulations and also on analytical studies.

2.7 Literature Review Summary and Focus of the Proposed Research

A number of benefits of DDIs exist as outlined in the literature review. While traffic volume per lane is a major consideration, not many studies appear to have conducted such analysis without deviating from simulation models. Traffic flow coordination between the two crossover nodes and the lane configuration information is used in estimating traffic volume per lane for each movement. The conflicting movements with maximum traffic volume per lane establish the critical movements for the interchange. A thorough understanding of the conflicting and non-conflicting movements is required to identify the critical movements and analyze a DDI. The proposed analysis procedure identifies the critical movements and adds the conflicting traffic volume per lane logically to obtain an overall CLV based performance measure for a DDI. Morning and afternoon peak period traffic volume information can be considered to assess and compare the performance of a DDI.

3. Methodology

The two intersections on either side, where traffic movements along the arterial cross each other, play an important role in evaluating the performance of a DDI. These intersections are shown as Node A and B in Figure 1. Traffic movements from the arterial and freeways use these two nodes to maneuver from arterial to freeway, from freeway to arterial, or continue along the arterial. In summary, the nodes provide safe right-of-way for the traffic movements navigating the interchange. These nodes are signalized to control the right-of-way. Possible traffic movements that use the two nodes are described in Table 3. For example, IR_A represents the inbound traffic movement from the freeway ramp to Node A. It includes left-turn (LFR_A) and right-turn (RFR_A) movements from the freeway ramp to arterial. While navigating the interchange system, some movement conflict with others and some don't. The traffic movements that do not conflict with another movement may operate concurrently. Understanding the conflicting as well as non-conflicting movements is the key in developing the DDI analysis methodology.

3.1 Conflict points and movements

Diverging, merging and crossing are the three types of conflict points in traffic engineering operations. The diverging conflict points are the points where one movement leaves the main traffic movement to go in a different direction. For an example, the right-turn and left-turn movements leaving the through movement create diverging conflict points. With adequate and appropriate design of turning bays this type of conflicts have very little or no impact to the traffic operations. Sometime weaving could be a concern near the diverging conflict point, but it can be safely assumed that drivers will choose a lane according to their desired destination and minimize last minute weaving. In contrary, the diverging movement reduces the main movement’s total traffic volume and thus can improve traffic operations. If the number of lanes along the main traffic movement remains unchanged before and after the diverging conflict point, the traffic operations along the main traffic movement after the diverging conflict point improves. In an ideal situation, such as during project planning, adequate storage and appropriate transitions is provided to all turning movements and thus the diverging conflict point will not

have negative impact to traffic operations. The traffic movements, which diverge from the main traffic movement at the diverging conflict points, are considered as the diverging movements. A few examples of diverging traffic movements for DDI are RTR_A - the right-turn movement diverging the left-turn crossover movement at Node A (LC_A) to go to the freeway ramp, LTR_B - the left-turn movement diverging the right-turn crossover movement at Node B (RC_B) to go to the freeway ramp, and LFR_B - the left-turn movement from the freeway ramp diverging the right-turn movement from the same freeway off-ramp at Node B (RFR_B) to access the arterial. Table 4 lists all the diverging movements for a DDI system.

The most important type of conflict points in DDI analysis are merging and crossing. The right-of-way at the merging and crossing point are managed appropriately and altered for safety. Merging movements occurs when one traffic movement merges with another. Generally the number of lanes before and after the merging conflict point remains same. Hence, the merging movement adds more traffic to the main movement and traffic volume along main movement increases after the merge point. Careful consideration should be given to the total traffic volume beyond the merging conflict point to assess the performance of the associated intersection. A few examples of merging traffic movement for DDI are RFR_A - the right-turn traffic movement that merges with the right-turn crossover traffic movement at Node A (RC_A), LTR_A - the left-turn traffic movement from the arterial that merges with the right-turn traffic movement to the ramp at Node A (RTR_A) to access the freeway, and LFR_B- the left-turn traffic movement from the ramp that merges with the left-turn crossover traffic movement at Node B (LC_B) to access the arterial. A list of all merging movements for a DDI is shown in Table 4.

The two intersections of a DDI are also the two crossing conflict points. At Node A, the left-turn crossover movement, LC_A, intersects right-turn crossover movement, RC_A, and at Node B, the left-turn crossover movement, LC_B, intersects right-turn crossover movement, RC_B. The movements that constitute the crossing conflict points are known as the crossing movements. Hence, all crossover movements at Nodes A and B (LC_A, RC_A, LC_B and RC_B) are also the crossing movement. These movements play a vital role in traffic operations of a DDI. The merging movements originated from the off-ramp can operate concurrently with the crossing movements at the node. For an example, when left-turn crossover, LC_A, has right-of-way and crosses the crossing conflict point at Node A, the right-turn from ramp, RFR_A, can operate concurrently. A detailed formulation to estimate the CLV of these merging movements are discussed in the subsequent paragraphs and also represented in Table 4 as overlapping movements.

3.2 Traffic volume and lane utilization factor

In traffic engineering, traffic volume per lane quantifies the quality (i.e., level of service) of a traffic movement. Different traffic movements may have different lane configuration or number of lanes. So, to compare two or more traffic movements, it is necessary to understand how lanes are utilized. If there is only one lane for a particular traffic movement, 100% of the total traffic volume uses that lane. When there are two lanes, ideally the total traffic volume should use both lanes evenly. In reality, the lane utilization is exactly not equal. The lane utilization varies from

location to location. Factors like origin and destination, driveways, lane drop beyond the conflict point, geometric design, type of movement (i.e., left-turn, right-turn or through) and human factor influence the lane utilization. Actual lane utilization could be determined from a detail per lane traffic volume count. However, the process is expensive and time consuming. Hence, standard lane utilization factors (LUF) are considered, which multiplied with the total traffic volume yields the per lane traffic volume for a particular movement. Based on experience and field observation, engineering judgment can be used to come up with a customized LUF. Table 5 shows a sample LUF that is considered in this study. The equivalent per lane traffic volume is used in comparing two different movements and estimating the total CLV of an intersection. If the total traffic volume is represented by V_i, lane utilization factor by LUF_i, then the per lane traffic volume (v_i) could be estimated as shown in Equation 1.

$$v_i = V_i \times LUF_i \tag{1}$$

where,

i = Corresponding traffic movements as shown in Table 3

3.3 Critical lane volume formulation

The traffic movements, which play a critical role in traffic operations of an intersection, are considered as the critical movements. A set of merging and crossing traffic movements, with the highest per lane traffic volume, are compared and added judiciously to obtain the intersection CLV. Hence, the understanding of the conflict points, merging movements, crossing movements, and overlapping movements are used in developing the DDI analysis procedure. As discussed before, the traffic operations of a DDI is hinged on the two intersections – Node A and B. Thus, proper identification and establishment of the critical movements at Nodes A and B is needed to evaluate and estimate the performance and level of service (LOS) of the interchange system.

There are three merging conflict points and one crossing conflict point at Node A. The movements associated to these conflict points are evaluated to determine a set of movement that is critical to the node. Considering the crossing conflict point at Node A, the crossover traffic movements, LC_A and RC_A, constitutes a total per lane traffic volume of $v_{LC_A} + v_{RC_A}$. The turn movements, RTR_A and LTR_A, merging in the on-ramp originates from the crossing movements, LC_A and RC_A, respectively. Hence, the total per lane traffic volume at the on-ramp merging conflict point is ($v_{RTR_A} + v_{LTR_A}$). If the on-ramp has separate receiving lanes for RTR_A and LTR_A, the two movements do not conflict and thus it is not considered in the CLV estimation. Hence, mathematically the CLV for crossing and the merging operations discussed here could be represented as follows:

$$\begin{aligned} CLV_{i_A} &= \sum_{i_A} v_{i_A} \\ &= \sum_{i_A} V_{i_A} \times LUF_{i_A} \end{aligned} \tag{2}$$

where,

i_A = Crossing movements at Node A, RC_A & LC_A

CLV_{i_A} = Critical lane volume for traffic movements i_A

$$CLV_{j_A} = \sum_{j_A} v_{j_A} = \sum_{j_A} V_{j_A} \times LUF_{j_A} \quad (3)$$

where,

j_A = Merging movements at Node A, LTR_A & RTR_A

CLV_{j_A} = Critical lane volume for traffic movements j_A

The merging movements that originate from the off-ramp can operate concurrently with the corresponding crossing movements (see Table 4 for details). This overlap is possible when the two movements from the freeway ramp, RFR_A and LFR_A, does not hinder each other. Hence, separate turn bays with adequate storage are assumed for these two movements. If this condition does not exist, the total per lane traffic volume from the ramp to the arterial ($v_{RFR_A} + v_{LFR_A}$) is considered as an independent movement and compared with Equation 2 and 3 to obtain the node CLV. In this paper, separate turn bays are assumed. Hence, the mathematical formulations to estimate CLV for these merging movements are as follows:

$$CLV_{k_A} = \sum_{k_A} v_{k_A} = \sum_{k_A} V_{k_A} \times LUF_{k_A} \quad (4)$$

where,

k_A = Merging movements at Node A, RFR_A & RC_A

CLV_{k_A} = Critical lane volume for traffic movements k_A

$$CLV_{l_A} = \sum_{l_A} v_{l_A} = \sum_{l_A} V_{l_A} \times LUF_{l_A} \quad (5)$$

where,

l_A = Merging movements at Node A, LFR_A & LC_A

CLV_{l_A} = Critical lane volume for traffic movements l_A

As discussed before, the CLV of this node depends on one crossing and three merging operations. The CLV estimation shown in Equation 2 represents the lone crossing operation and Equation 3, 4 and 5 represents the three merging operations. Therefore, the CLV obtained from Equation 2, 3, 4 and 5 are compared and the one that yields the highest per lane traffic volume, represents the node's CLV. Mathematically, it is represented as follows:

$$CLV_A = \max\left(CLV_{i_A}, CLV_{j_A}, CLV_{k_A}, CLV_{l_A}\right) \quad (6)$$

where,

CLV_A = Critical lane volume of Node A

Similarly, the CLV of Node B (CLV_B) is mathematically represented as:

$$CLV_B = \max\left(CLV_{i_B}, CLV_{j_B}, CLV_{k_B}, CLV_{l_B}\right) \quad (7)$$

The estimated CLV of Node A and B are divided by intersection capacity to obtain intersection v/c ratio. Since, DDI traffic operation is a two-phase operation, the intersection capacity considered here is 1850 vehicle/hr/lane [see Table 2 for details]. The intersection v/c ratio is compared with predefined intersection v/c ratio as shown in Table 1 to obtain intersection level of services (LOSs), LOS_A and LOS_B. The LOS_A and LOS_B are compared again and the node with worst LOS defines the LOS of the DDI interchange. Following steps summarizes the DDI analysis for project planning studies:

Step 1. Obtain traffic volume, lane configuration, LUF, intersection capacity and LOS definition.
Step 2. Evaluate lane configuration of the merging movements.
Step 3. Use Equation 2, 3, 4 and 5 appropriately to estimate CLV for different conflicting movements.
Step 4. Compare the CLV of the conflicting movements and use Equation 6 and 7 to estimate the CLV of nodes A & B, CLV_A and CLV_B.
Step 5. Divide CLV_A and CLV_B by intersection capacity to obtain the v/c ratio.
Step 6. Compare the v/c ratio for LOS of nodes A & B, LOS_A and LOS_B.
Step 7. The node with worst LOS is the interchange LOS.

4. Application and results

The developed formulation and methodology is applied to evaluate I-44 at Route 13 interchange at Springfield, Missouri. It is the first DDI construction in United States of America (USA). A detail VISSIM simulation based traffic operation analysis of this interchange could be found in a report titled "Diverging diamond interchange performance evaluation (I-44 and Route 13)" (Chilukuri et al. 2011). The analysis presented in the report was done based on peak hour (morning and afternoon) traffic volume for years 2010 and 2035. A satellite image of the interchange obtained from Google Maps is show in Figure 2 for reference. Route 13 is a north-south corridor with 2 through lanes and I-44 is the major interstate in the central USA. All ramps of this interchange are single lane ramp. The off-ramps from I-44 have separate turn bays for left-turn and right-turn movements. Arrows in Figure 2 show the number of lanes for each movement. Originally, it was a diamond interchange, which was reconstructed to DDI in the year 2009.

In this example the intersection on the south side of the interchange could be considered as Node A and the intersection on the north side as Node B. Based on the lane configuration, all I-44 on-ramp movements have to merge into one lane before merging with I-44. Also, the right-turn movements from the I-44 off-ramps to Route 13 does not have separate receiving lane. Hence, the right-turn movements from the off-ramps have to merge with Route 13 through traffic. The peak hour traffic volume details of year 2010 and 2035 are shown in Figures 3a and 3b, respectively. Traffic delay as presented in the report (Chilukuri et al. 2011) is shown in Table 6. Based on HCM 2010 (TRB 2010), these delay values are converted to intersection LOS and presented in Table 6.

All movements at Nodes A and B are typical and considered in CLV estimation as described in Equations 6 and 7, respectively. The movements considered in the CLV analysis along with peak hour traffic volume, number of lanes, lane utilization factor (LUF) and peak hour equivalent traffic volume per lane are detailed in Table 7. Since, the intersections in DDI operate in two phases, the capacity of each intersection considered is 1850 veh/hr/lane. The CLV of the two intersections is estimated by inputting the per lane traffic volume information from Table 7 to Equation 6 and 7. The intersection CLV is divided by the intersection capacity to obtain v/c ratio, which is compared with the v/c ratio in Table 1 for LOS_A and LOS_B. Intersection CLV, v/c ratio and LOS of Nodes A and B for year 2010 and 2035 are shown in Table 8.

The LOS result obtained using the CLV estimation methodology developed in this paper is comparable with the simulation results. There are three instances when the results differ. The simulation and CLV based LOS of Node A for year 2010 during morning peak period are B and A respectively. In this case, the v/c ratio from CLV analysis is 0.57 and minimum v/c ratio for LOS B is 0.60, a difference of 0.03. Traffic flow is highly synchronized in the simulation models. The movements at Node A might have higher delay due to synchronization, and thus the LOS B. In the second and third instances (Node B – 2010 PM peak period and Node A – 2035 AM peak period) the delay time obtained from simulation analysis is very close to the tipping point where the LOS could be one grade higher to match with CLV based LOS. Hence, the exercise indicates the reliability and accuracy of the methodology and formulation developed for DDI analysis.

The developed methodology and formulation is also tested on an interchange planning-project. In this project the engineers analyzed different suitable conventional and unconventional alternatives for a possible solution. DDI was one of them. The location of this interchange is in Frederick County, Maryland and the two highways constituting the interchange are I-270 and MD 85. At present it is a partial cloverleaf-type interchange and require improvements by year 2030 to accommodate multi-modal corridor along I-270 and growing demand along MD 85. The present traffic volume was projected to year 2030 for evaluation. The afternoon peak hour traffic was critical compared to morning peak hour traffic. Hence, the interchange was analyzed for afternoon peak period only. Detail lane configuration considered and projected traffic volume are shown in Figure 4.

In this example the intersection on the south side of the interchange could be considered as Node A and the intersection on the north side as Node B. The right-turn and left-turn movements from MD 85 to I-270 on-ramp at Node A (RTR_A and LTR_A) has separate receiving lanes and drivers can maintain their lanes till the on-ramp merges with freeway. Also, the right-turn movement from I-270 southbound off-ramp to MD 85 southbound (RFR_A) has separate receiving lanes that are continued beyond the intersection. Hence, these three movements are not considered in the CLV estimation of Node A. Even though, the left-turn movement from I-270 southbound off-ramp to MD 85 northbound at Node A (LFR_A) has separate receiving lanes, it eventually merges with MD 85 northbound before Node B. Hence, this movement is considered in the CLV estimation of Node A. The movements at Node B are typical and considered in CLV as described in Equation 7 for the node. Table 9 provide details of the movements considered in the analysis along with afternoon peak hour traffic volume, number of lanes, LUF and equivalent traffic volume per lane.

The CLV for Nodes A and B of I-270 and MD 85 interchange is estimated as follows:

$$\begin{aligned} CLV_A &= \max(1258+789,\ 1258+594) \\ &= 2047 \text{ veh/hr/lane} \\ CLV_B &= \max(568+835,\ 568+425,\ 835+410,\ 996+806) \\ &= 1802 \text{ veh/hr/lane} \end{aligned}$$

The obtained CLV of the two nodes are divided by intersection capacity of 1850 veh/hr/lane to estimate the v/c ratio (Node A - 1.11 and Node B - 0.97). The estimated v/c ratio is compared with the v/c ratio in Table 1 for node LOS. Based on the comparison, the LOS of Node A is F and Node B is E. A Synchro model is also developed to analyze the interchange. Synchro models provide measure of effectiveness based on HCM 2010 (TRB 2010) intersection analysis procedure. The LOS obtained from Synchro model are F and C for Node A and Node B, respectively. Both CLV and Synchro analysis identified Node A as a failing intersection but had different results for Node B. The critical movements for Node B are LTR_B and RTR_B. The maximum v/c ratio obtained from Synchro model is 0.92 for LTR_B and RTR_B merge point. Though the LOS is different for the two analyses procedure, the v/c ratio is comparable. Hence, the DDI analysis methodology developed and suggested in this paper can successfully identify the failing nodes.

5. Conclusion

The methodology and formulation developed and presented in this paper is less time consuming, easy to use and reliable planning tool to analyze a DDI. However, for detail operational analysis traffic engineering simulation software is recommended. The examples presented, compare the results obtained from the proposed methodology and traffic analysis software such as VISSIM and Synchro. The developed methodology is promising and reliable. It can come handy in preliminary evaluation of DDIs during project planning before considering detail analysis using traffic simulation software. Interchanges like I-270 at MD 85, which fails based on the proposed analysis methodology, does not require further analysis. On the other hand, interchanges like I-44 at Route 13 for which a better LOS is obtained using the proposed analysis methodology, should be further analyzed using simulation based software to fine-tune lane configuration, obtain signal timing, identify optimum distance between the nodes, manage queue efficiently and setting offset in signal timing for continuity in traffic flow. HCM 2010 has a quick analysis methodology for intersections, which is used in project planning to estimate intersection LOS. The proposed method could be compared with the HCM 2010 quick analysis methodology and adopted for preliminary analysis of a DDI. The proposed methodology also relies on the traffic engineers' knowledge and experience in traffic operations. Factors like lane utilization and intersection capacity should be studied and developed for each location. Accuracy of the result depends on these factors.

Acknowledgement

The authors would like to acknowledge the help and support of the Traffic Development and Support Division of the Maryland State Highway Administration in developing the DDI analysis procedure.

References

Afshar, A. M., J. G. Bared, S. Wolf, and P. K. Edara. 2009. "Traffic Operational Comparison of Single-Point and Diverging Diamond Interchanges." Presented at 88th Annual Meeting of the Transportation Research Board, Washington, D.C., 2009.

Akcelik, R. (1981). "Traffic signals: Capacity and timing analysis." Research Rep. No. 123, Australian Road Research Board, Australia.

Andrzej, P. T. (2000). "Uncertainly in saturation flow predictions." Transportation Research Circular, Proc., 4th Int. Symp. on Highway Capacity.

Bared, J. G., Edara, P. K., and Jagannathan, R. (2005). "Design and Operational Performance of Double Crossover Intersection and Diverging Diamond Interchange." In Transportation Research Record: Journal of the Transportation Research Board, No. 1912, Transportation Research Board of the National Academies, Washington, D.C., pp. 31–38.

Bared, J., and Don, S. 2010. "The Double Crossover Diamond Interchange. Springfield, MO." FHWA - HRT-11-001, Vol. 74. http://www.fhwa.dot.gov/publications/publicroads/10novdec/01.cfm, Accessed: June 25, 2012.

Bared, J., Granda, T, and Zineddin, A. 2007. "FHWA Tech Brief: Drivers' Evaluation of the Diverging Diamond Interchange." Washington DC : Turner-Fairbank Highway Research Center. Tech Brief. FHWA-HRT-07-048.

Bonneson, J. A. (1998). "Lane volume and saturation flow rate for multilane intersection approach." J. Transp. Eng., 124(3), 240–245.

Bonneson, J. A. and Messer, C. J. (1998), "Phase Capacity Characteristics for Signalized Interchange and Intersection Approaches", 77th Annual Meeting of the Transportation Research Board, January, Washington, D.C.

Branston, D., and Van Zuylen, H. (1978). "The estimation of saturation flow, effective green time, and passenger car equivalents at traffic signals by linear regression." Transp. Res., 12 (1), 47–53.

Chilukuri, V., Siromaskul, S.,Trueblood, M., and Ryan, T. (2011). "Diverging diamond interchange performance evaluation (I-44 and Route 13)", prepared by HDR Engineering for Missouri Department of Transportation, Report # OR11.012.

Chlewicki, G. (2003). "New Interchange and Intersection Designs: The Synchronized Split-Phasing Intersection and the Diverging Diamond Interchange," Prepared for 2nd Urban Street Symposium, Anaheim, CA.

CMP. (2011). Traffic Level of Service Circulation Methods. San Mateo County Congestion Management Program, Appendix-B, pp. B1-B9, URL http://www.ccag.ca.gov/pdf/Studies/Final%202011%20CMP_Appendix_Nov11_1.pdf, Accessed, July 24, 2012.

Diverging Diamond. (2012). "A Diamond Interchange with a Twist". URL: http://www.divergingdiamond.com/index.html, Accessed, July 10, 2012.

Drew, D. R. (1963). "Design and signalization of high-type facilities." Traffic Eng., 33(7), 17–25.

Esawey, M. E., and Sayed, T. 2012. "Analysis of unconventional arterial intersection designs (UAIDs): state-of-the-art methodologies and future research directions." Transpometrica (In Press), DOI:10.1080/18128602.2012.672344.

Hughes, W., Jagannathan, R., Sengupta, D, and Hummer, J. 2010. Alternative Intersection and Interchanges: Informational Report.

Inman, V.W. (2007). "Driver's Evaluation of the Diverging Diamond Interchange," Report No. FHWA-HRT-07-048. Federal Highway Administration. URL:http://www.tfhrc.gov/safety/pubs/07048/index.htm. Accessed June 26, 2012.

Li, H., and Prevedouros, P. D. (2002). "Detailed observations of saturation headways and start-up lost times." Transportation Research Record 1802, Transportation Research Board, Washington, D.C.

Maji, A., Bhattacharya, P. (2011). "Methodology for Innovative Intersection Design," 1st Conference of Transportation Research Group of India, Bangalore, India, Dec 2011.

Maji, A., Bhattacharya, P. and Jha, M.K. (2012a). "Critical Lane Volume Based Double Crossover Diamond Interchange Analysis Procedure," Innovations in Traffic Flow Theory and Characteristics, and Highway Capacity and Quality of Service Symposium, Fort Lauderdale, Florida, June 19-22, 2012.

Maji, A., Mishra, S. and Jha, M.K. (2013). "Critical Lane Volume (CLV)-based Capacity and Level of Service Analyses for Diverging Diamond Interchange," 92nd Annual TRB Meeting, Washington, D.C. (Accpeted).

Parsons, G. (2007). "The Parallel Flow Intersection: A New Two-Phase Signal Alternative." ITE Journal.

Poorbaugh, J. and Houston, B. (2006). "Diverging Diamond Interchange," Institute of Transportation Engineers, Washington, DC.

Prevedouros, P. D., and Jovanis, P. P. (1988). "Validation of saturation flows and progression factors for traffic-actuated signals." Transportation Research Record 1194, Transportation Research Board, Washington, D.C.

Prevedouros, P. D., and Koga, C. (1996). "Comparison of 1985 and 1994 HCM: Signalized intersection delay estimates." ITE J., 66(7), 26–30.

Rouphail, N. M., and Nevers, B. L. (2001). "Saturation flow estimation by traffic groups." Transportation Research Record 1776, Transportation Research Board, Washington, D.C.

Ruehr, E. (1988). "Advantages of the planning method of capacity analysis for signalized intersections." ITE J., January, 34–19.

Stokes, R. (1988). "Comparison of saturation flow rates at signalized intersections." ITE J., November, 15–20.

Stokes, R. W., Messer, C. J., and Stover, V. G. (1986). "Saturation flows of exclusive double left-turn lanes." Transportation Research Record 1091, Transportation Research Board, Washington, D.C.

TRB. (2000). Highway Capacity Manual (HCM). Prepared by Transportation Research Board, National Research Council, Washington, D.C., U.S.A.

TRB. (2010). Highway Capacity Manual (HCM). Prepared by Transportation Research Board, National Research Council, Washington, D.C., U.S.A.

List of Tables

Table No.	Title
1	Intersection Level of Service Definitions
2	Intersection Capacities
3	Description of movements
4	Diverging, merging and overlapping movements
5	Sample lane utilization factor (LUF)
6	Peak hour delay and LOS for the nodes of I-44 and Route 13 interchange
6	Detail CLV estimation for year 2010 of I-44 and Route 13 interchange
8	CLV based intersection LOS for I-44 and MD 85 interchange
9	Details of critical lane volume estimation for I-270 and MD 85 interchange

List of Figures

Figure No.	Title
1	Diagrammatic sketch of a DDI showing different movements
2	Satellite image of I-44 and Route 13 interchange in Springfield, Missouri
3(a)	Year 2010 peak hour traffic volume for I-44 and Route 13 interchange
3(b)	Year 2035 peak hour traffic volume for I-44 and Route 13 interchange
4	Lane configuration and PM peak hour traffic volume of I-270 and MD 85 interchange

Table 1. Intersection Level of Service Definitions (CMP, 2011)

Level of Service	Interpretation	V/C Ratio
A	Uncongested operations; all queues clear in a single signal cycle.	Less than 0.60
B	Very light congestion; an occasional approach phase is fully utilized.	0.60 to 0.69
C	Light congestion; occasional backups on critical approaches.	0.70 to 0.79
D	Significant congestion on critical approaches, but intersection functional. Cars required to wait through more than one cycle during short peaks. No long-standing queues formed.	0.80 to 0.89
E	Severe congestion with some long-standing queues on critical approaches. Blcokage of intersection may occur if traffic signal does not provide for protected turning movements. Traffic queue may block nearby intersection upstream of critical approaches.	0.90 to 0.99
F	Total breakdown, stop-and-go operation.	1.00 and greater

Table 2. Intersection Capacities (CMP, 2011)

Number of Signal Phases	Capacity (in vph)
2	1,850
3	1,760
4 or more	1,700

Table 3. Description of movements

Sl #	Symbol	Description
1	IR_A	Inbound movement from Ramp to node A
2	T_{FA}	Through movement From node A
3	T_{TA}	Through movement To node A
4	OR_A	Outbound movement to Ramp from node A
5	LFR_A	Left turn movement From Ramp to node A
6	RFR_A	Right turn movement From Ramp to node A
7	LC_A	Left turn Crossover movement at node A
8	RTR_A	Right turn movement To Ramp from node A
9	LTR_A	Left turn movement To Ramp from node A
10	RC_A	Right turn Crossover movement at node A
11	OR_B	Outbound movement to Ramp from node B
12	T_{TB}	Through movement To node B
13	T_{FB}	Through movement From node B
14	IR_B	Inbound movement from Ramp to node B
15	LTR_B	Left turn movement from Ramp to node B
16	RTR_B	Right turn movement To Ramp from node B
17	LC_B	Left turn Crossover movement at node B
18	RFR_B	Right turn movement From Ramp to node B
19	LFR_B	Left turn movement From Ramp to node B
20	RC_B	Right turn Crossover movement at node B
21	T_{AB}	Through movement from node A to node B
22	T_{BA}	Through movement from node B to node A

Table 4. Diverging, merging and overlapping movements

Node	Main movement	Secondary movement	Type of movement
A	LC_A	RTR_A	Diverging
	RC_A	LTR_A	Diverging
	RFR_A	LFR_A	Diverging
	LC_A	LFR_A	Merging
	RC_A	RFR_A	Merging
	RTR_A	LTR_A	Merging
	LC_A	RFR_A	Overlapping
	RC_A	LFR_A	Overlapping
B	LC_B	RTR_B	Diverging
	RC_B	LTR_B	Diverging
	RFR_B	LFR_B	Diverging
	LC_B	LFR_B	Merging
	RC_B	RFR_B	Merging
	RTR_B	LTR_B	Merging
	LC_B	RFR_B	Overlapping
	RC_B	LFR_B	Overlapping

Table 5. Sample lane utilization factor (LUF)

Type of movement	Number of lanes	LUF
Through and right turn	1	1.00
	2	0.55
	3	0.35
	4	0.30
Left turn	1	1.00
	2	0.60
	3	0.40

Table 6. Peak hour delay and LOS for the nodes of I-44 and Route 13 interchange

Node	Year 2010				Year 2035			
	AM		PM		AM		PM	
	Delay (sec/veh)	LOS	Delay (sec/veh)	LOS	Delay (sec/veh)	LOS	Delay (sec/veh)	LOS
A	17.1	B	22.6	C	26.1	C	34.7	C
B	17.6	B	19.6	B	37.5	D	53.8	D

Table 7. Detail CLV estimation for year 2010 of I-44 and Route 13 interchange

Movement	AM (PM) Volume (veh/hr)		# of lanes	LUF	AM (PM) Vol/lane (veh/hr/lane)	
	2010	2035			2010	2035
LC_A	525 (1190)	647 (1452)	2	0.60	315 (714)	388 (871)
RC_A	1345 (1135)	1641 (1385)	2	0.55	740 (624)	902 (762)
LFR_A	160 (165)	195 (201)	1	1.00	160 (165)	195 (201)
RFR_A	270 (180)	329 (220)	1	1.00	270 (180)	329 (220)
LTR_A	415 (250)	506 (305)	1	1.00	415 (250)	506 (305)
RTR_A	275 (400)	336 (488)	1	1.00	275 (400)	336 (488)
LC_B	1385 (1095)	1690 (1336)	2	0.60	831 (657)	1014 (802)
RC_B	590 (1235)	720 (1507)	2	0.55	325 (679)	396 (823)
LFR_B	375 (290)	458 (354)	1	1.00	375 (290)	458 (354)
RFR_B	395 (335)	409 (409)	1	1.00	395 (335)	409 (409)
LTR_B	95 (120)	116 (146)	1	1.00	95 (120)	116 (146)
RTR_B	170 (150)	207 (183)	1	1.00	170 (150)	207 (183)

Table 8. CLV based intersection LOS for I-44 and MD 85 interchange

Node	Yesr 2010						Year 2035					
	AM			PM			AM			PM		
	CLV	v/c	LOS	CLV	v/c	LOS	CLV	v/c	LOS	CLV	v/c	LOS
A	1055	0.57	A	1338	0.72	C	1290	0.70	C	1633	0.88	D
B	1206	0.65	B	1336	0.72	C	1472	0.80	D	1625	0.88	D

Note: CLV – Critical lane volume (veh/hr/lane)

Table 9. Details of critical lane volume estimation for I-270 and MD 85 interchange

Movement	Volume (veh/hr)	# of lanes	LUF	Vol/lane (veh/hr/lane)	Remarks
LC_A	3145	3	0.40	1258	Considered as left-turn movement
RC_A	1435	2	0.55	789	Considered as right-turn movement
LFR_A	990	2	0.60	594	Considered as left-turn movement
LC_B	1420	3	0.40	568	Considered as left-turn movement
RC_B	2385	3	0.35	835	Considered as right-turn movement
LFR_B	425	1	1.00	425	-
RFR_B	410	1	1.00	410	-
LTR_B	1660	2	0.60	996	Considered as left-turn movement
RTR_B	1465	2	0.55	806	Considered as right-turn movement

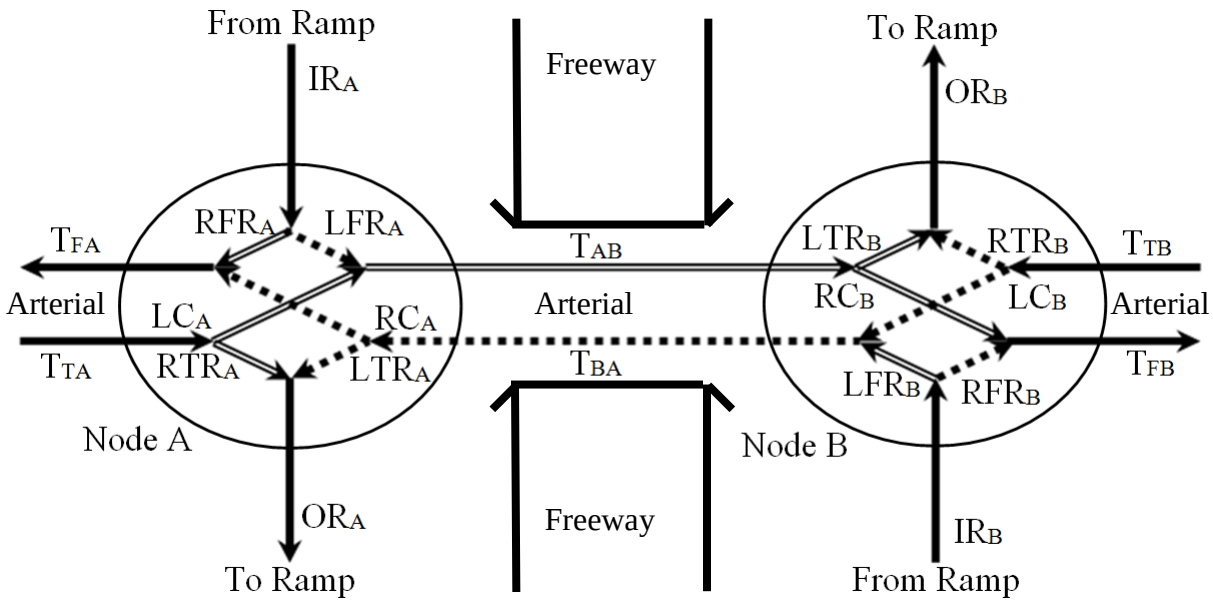

Figure 1. Diagrammatic sketch of a DDI showing different movements

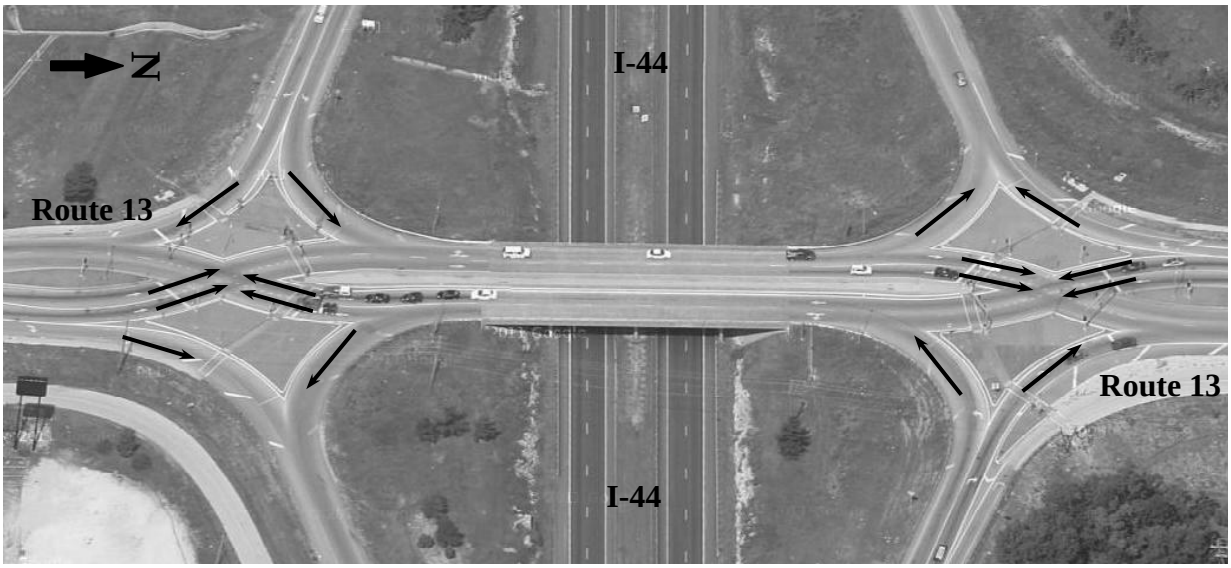

Figure 2. Satellite image of I-44 and Route 13 interchange in Springfield, Missouri

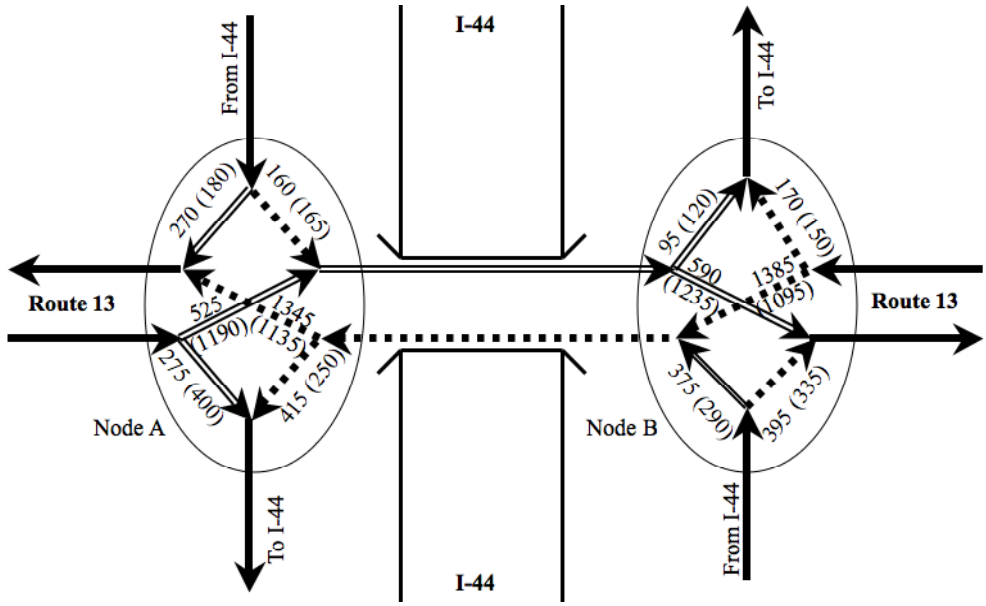

Figure 3a. Year 2010 peak hour traffic volume for I-44 and Route 13 interchange

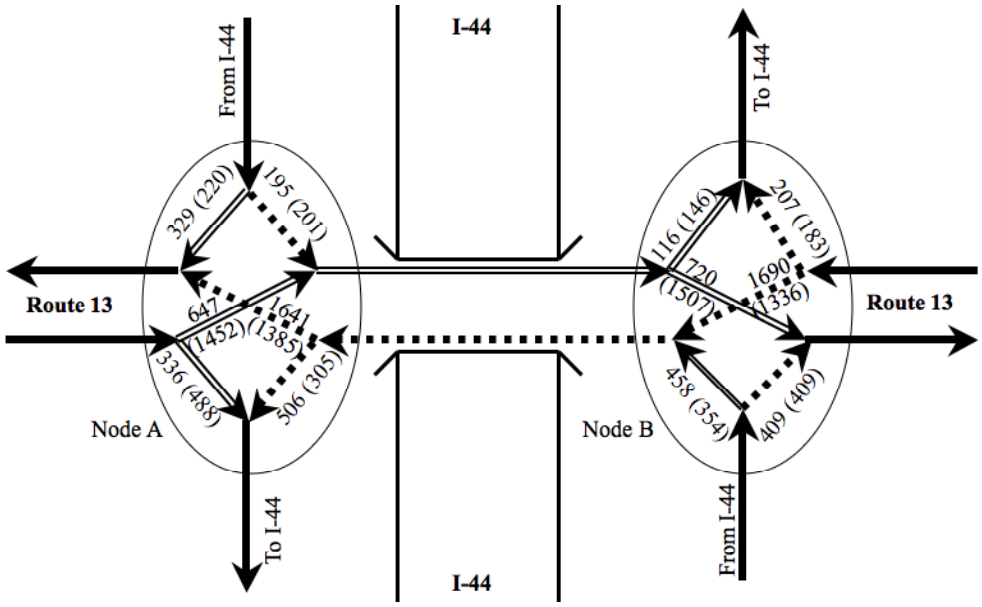

Figure 3b. Year 2035 peak hour traffic volume for I-44 and Route 13 interchange

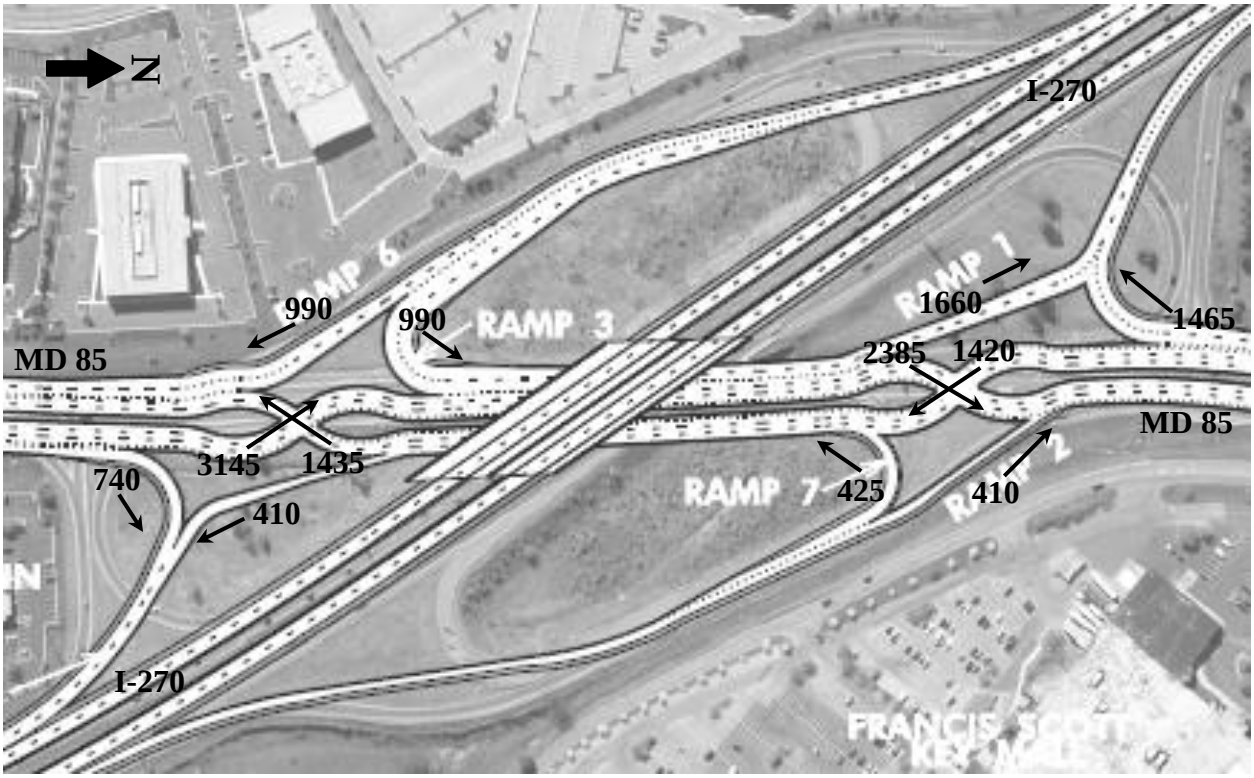

Figure 4. Lane configuration and PM peak hour traffic volume of I-270 and MD 85 interchange