FANUC Robot series

R-30*i*B/R-30*i*B Plus CONTROLLER

MAINTENANCE MANUAL

B-83195EN/10

© FANUC CORPORATION, 2012

• Original Instructions

Thank you very much for purchasing FANUC Robot.
Before using the Robot, be sure to read the "FANUC Robot SAFETY HANDBOOK (B-80687EN)" and understand the content.

- No part of this manual may be reproduced in any form.
- The appearance and specifications of this product are subject to change without notice.

The products in this manual are controlled based on Japan's “Foreign Exchange and Foreign Trade Law". The export from Japan may be subject to an export license by the government of Japan. Further, re-export to another country may be subject to the license of the government of the country from where the product is re-exported. Furthermore, the product may also be controlled by re-export regulations of the United States government. Should you wish to export or re-export these products, please contact FANUC for advice.

The products in this manual are manufactured under strict quality control. However, when using any of the products in a facility in which a serious accident or loss is predicted due to a failure of the product, install a safety device.

In this manual, we endeavor to include all pertinent matters. There are, however, a very large number of operations that must not or cannot be performed, and if the manual contained them all, it would be enormous in volume. It is, therefore, requested to assume that any operations that are not explicitly described as being possible are "not possible".

SAFETY PRECAUTIONS

This chapter must be read before using the robot.

For detailed functions of the robot operation, read the relevant operator's manual to understand fully its specification.

For the safety of the operator and the system, follow all safety precautions when operating a robot and its peripheral equipment installed in a work cell.
For safe use of FANUC robots, you must read and follow the instructions in “FANUC Robot SAFETY HANDBOOK (**B-80687EN)**”.

1 DEFINITION OF USER

The personnel can be classified as follows.

Operator:
- Turns the robot controller power on/off
- Starts the robot program from operator panel

Programmer or Teaching operator:
- Operates the robot
- Teaches the robot inside the safety fence

Trained maintenance worker:
- Operates the robot
- Teaches the robot inside the safety fence
- Performs maintenance (repair, adjustment, replacement)

- Operator is not allowed to work in the safety fence.
- Programmer/Teaching operator and maintenance technician is allowed to work in the safety fence. Works carried out in the safety fence include transportation, installation, teaching, adjustment, and maintenance.
- To work inside the safety fence, the person must be trained on proper robot operation.

Table 1 lists the work outside the safety fence. In this table, the symbol “O” means the work allowed to be carried out by the worker.

Table 1 List of work outside the fence

	Operator	Programmer or Teaching operator	Trained maintenance worker
Turn power ON/OFF to Robot controller	O	O	O
Select operating mode (AUTO, T1, T2)		O	O
Select remote/local mode		O	O
Select robot program with teach pendant		O	O
Select robot program with external device		O	O
Start robot program with operator’s panel	O	O	O
Start robot program with teach pendant		O	O
Reset alarm with operator’s panel		O	O
Reset alarm with teach pendant		O	O
Set data on teach pendant		O	
Teaching with teach pendant		O	
Emergency stop with operator’s panel	O	O	O
Emergency stop with teach pendant	O	O	O
Maintain for operator’s panel		O	
Maintain for teach pendant			O

In the robot operating, programming and maintenance, the operator, programmer/teaching operator and trained maintenance worker take care of their safety using at least the following safety protectors.

- Use clothes, uniform, overall adequate for the work
- Safety shoes
- Helmet

2 DEFINITION OF SAFETY NOTATIONS

To ensure the safety of users and prevent damage to the machine, this manual indicates each precaution on safety with "**WARNING**" or "**CAUTION**" according to its severity. Supplementary information is indicated by "**NOTE**". Read the contents of each "**WARNING**", "**CAUTION**" and "**NOTE**" before using the robot.

Symbol	Definitions
⚠**WARNING**	Used if hazard resulting in the death or serious injury of the user will be expected to occur if he or she fails to follow the approved procedure.
⚠**CAUTION**	Used if a hazard resulting in the minor or moderate injury of the user, or equipment damage may be expected to occur if he or she fails to follow the approved procedure.
NOTE	Used if a supplementary explanation not related to any of WARNING and CAUTION is to be indicated.

- Check this manual thoroughly, and keep it handy for the future reference.

3 WARNING & CAUTION LABEL

(1) Step-on prohibitive label

Fig.3 (a) Step-on prohibitive label

Description

Do not step on or climb the robot or controller as it may adversely affect the robot or controller and you may get hurt if you lose your footing.

(2) High-temperature warning label

Fig.3 (b) High-Temperature warning label

Description

Be cautious about a section where this label is affixed, as the section generates heat. If you must touch such a section when it is hot, use a protective provision such as heat-resistant gloves.

(3) High-voltage warning label

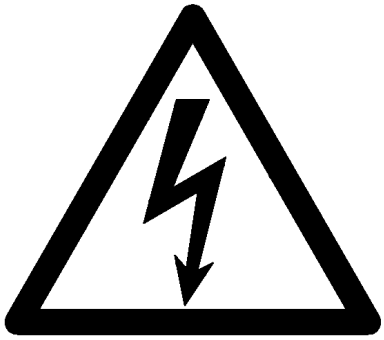

Fig.3 (c) High-voltage warning label

Description

A high voltage is applied to the places where this label is attached.

Before starting maintenance, turn the power to the controller off, and turn the circuit breaker off to avoid electric shock hazards. Take additional precautions with the servo amplifier and other equipment, because high-voltage remains in these units for a certain amounts of time

(4) Caution label

Fig.3 (d) Caution label

Description

See related contents of this manual.

4 WARNING & CAUTION REGARDING USE OF CONTROLLER

⚠ WARNING

1 The R-30*i*B/R-30*i*B Plus controller has a sealed structure, it is designed so that dust, oil mist, conductive foreign particulate, etc. around the controller do not enter the interior of the controller.
Whether or not the controller is in operation, if the door is not locked with the key, the original sealing capacity of the controller cannot be secured. In this case, failure may occur due to internal contamination, and there is the risk of electric shock, electric leakage, and fire due to insulation deterioration.
2 Be sure to lock the controller securely with the key to prohibit that the person except the trained maintenance worker opens the door of the controller.
3 To prevent electric shock, do not energize the controller while the door is open.
4 After connecting input power cable, in order to avoid turning on the main breaker, padlocking can be installed to the breaker handle.
5 Install one or more necessary quantity of EMERGENCY STOP button(s) within the operator's reach in appropriate location(s) based on the system layout.
6 Be sure to connect the ground wire according to Section 3.3.3.1 when connecting power supply to the controller.

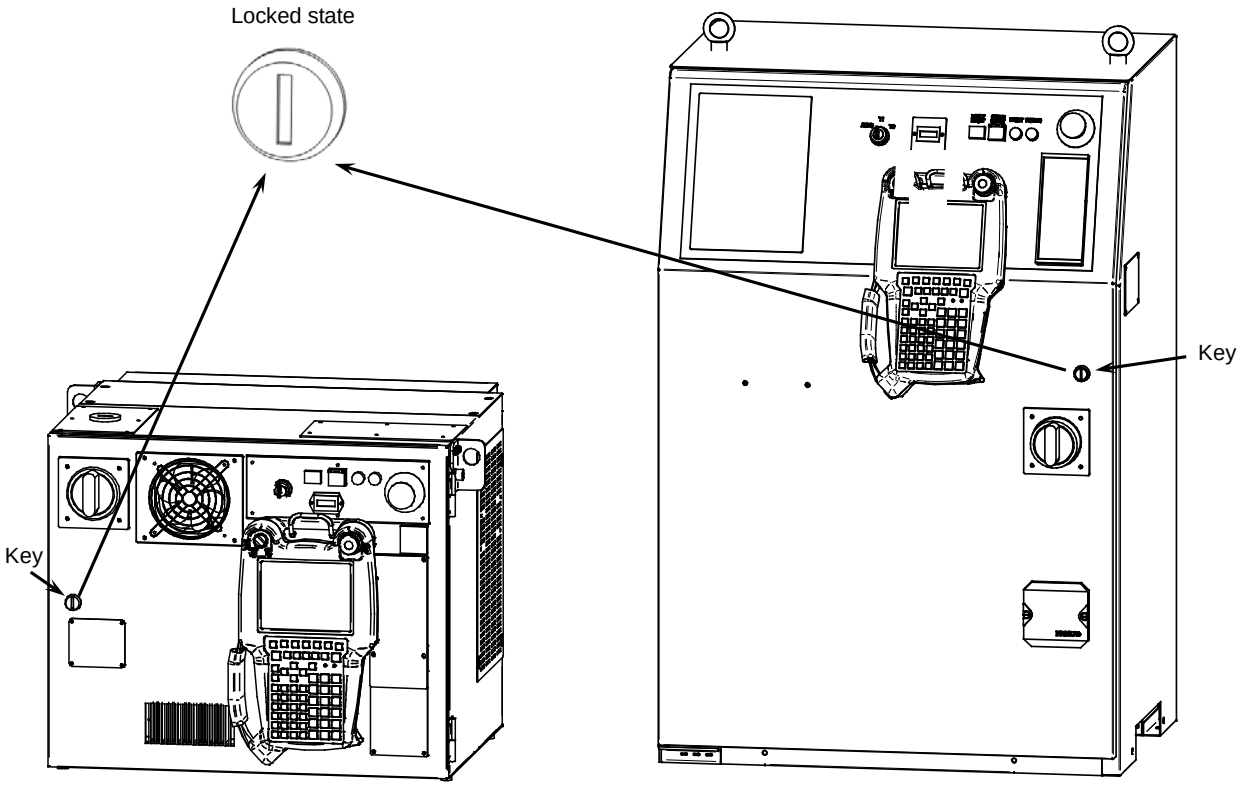

(A-cabinet) **(B-cabinet)**

PREFACE

This manual describes the following models (R-30*i*B/R-30*i*B Plus controller).

Model	Abbreviation	
FANUC Robot R-2000*i*B/100P	R-2000*i*B/100P	R-2000*i*B
FANUC Robot R-2000*i*B/100H	R-2000*i*B/100H	
FANUC Robot R-2000*i*B/125L	R-2000*i*B/125L	
FANUC Robot R-2000*i*B/150U	R-2000*i*B/150U	
FANUC Robot R-2000*i*B/165F	R-2000*i*B/165F	
FANUC Robot R-2000*i*B/165R	R-2000*i*B/165R	
FANUC Robot R-2000*i*B/170CF	R-2000*i*B/170CF	
FANUC Robot R-2000*i*B/175L	R-2000*i*B/175L	
FANUC Robot R-2000*i*B/185L	R-2000*i*B/185L	
FANUC Robot R-2000*i*B/200R	R-2000*i*B/200R	
FANUC Robot R-2000*i*B/200T	R-2000*i*B/200T	
FANUC Robot R-2000*i*B/210F	R-2000*i*B/210F	
FANUC Robot R-2000*i*B/210WE	R-2000*i*B/210WE	
FANUC Robot R-2000*i*B/210FS	R-2000*i*B/210FS	
FANUC Robot R-2000*i*B/220U	R-2000*i*B/220U	
FANUC Robot R-2000*i*B/220US	R-2000*i*B/220US	
FANUC Robot R-2000*i*B/250F	R-2000*i*B/250F	
FANUC Robot R-2000*i*C/100P	R-2000*i*C/100P	R-2000*i*C
FANUC Robot R-2000*i*C/125L	R-2000*i*C/125L	
FANUC Robot R-2000*i*C/165F	R-2000*i*C/165F	
FANUC Robot R-2000*i*C/165R	R-2000*i*C/165R	
FANUC Robot R-2000*i*C/190U	R-2000*i*C/190U	
FANUC Robot R-2000*i*C/210F	R-2000*i*C/210F	
FANUC Robot R-2000*i*C/210R	R-2000*i*C/210R	
FANUC Robot R-2000*i*C/210L	R-2000*i*C/210L	
FANUC Robot R-2000*i*C/210WE	R-2000*i*C/210WE	
FANUC Robot R-2000*i*C/220U	R-2000*i*C/220U	
FANUC Robot R-2000*i*C/270F	R-2000*i*C/270F	
FANUC Robot R-2000*i*C/270R	R-2000*i*C/270R	
FANUC Robot R-2000*i*D/100FH	R-2000*i*D/100FH	R-2000*i*D
FANUC Robot R-2000*i*D/165FH	R-2000*i*D/165FH	
FANUC Robot R-2000*i*D/210FH	R-2000*i*D/210FH	
FANUC Robot R-1000*i*A/80F	R-1000*i*A/80F	R-1000*i*A
FANUC Robot R-1000*i*A/80H	R-1000*i*A/80H	
FANUC Robot R-1000*i*A/100F	R-1000*i*A/100F	
FANUC Robot R-1000*i*A/120F-7B	R-1000*i*A/120F-7B	
FANUC Robot R-1000*i*A/130F	R-1000*i*A/130F	
FANUC Robot M-2*i*A/3A	M-2*i*A/3A	M-2*i*A
FANUC Robot M-2*i*A/3AL	M-2*i*A/3AL	
FANUC Robot M-2*i*A/3S	M-2*i*A/3S	
FANUC Robot M-2*i*A/3SL	M-2*i*A/3SL	
FANUC Robot M-2*i*A/6H	M-2*i*A/6H	
FANUC Robot M-2*i*A/6HL	M-2*i*A/6HL	
FANUC Robot M-3*i*A/6A	M-3*i*A/6A	M-3*i*A
FANUC Robot M-3*i*A/6S	M-3*i*A/6S	
FANUC Robot M-3*i*A/12H	M-3*i*A/12H	

Model	Abbreviation	
FANUC Robot M-10*i*A/6L	M-10*i*A/6L	M-10*i*A
FANUC Robot M-10*i*A/7L	M-10*i*A/7L	
FANUC Robot M-10*i*A/8L	M-10*i*A/8L	
FANUC Robot M-10*i*A/10S	M-10*i*A/10S	
FANUC Robot M-10*i*A/10M	M-10*i*A/10M	
FANUC Robot M-10*i*A/10MS	M-10*i*A/10MS	
FANUC Robot M-10*i*A/12	M-10*i*A/12	
FANUC Robot M-10*i*A/12S	M-10*i*A/12S	
FANUC Robot M-10*i*D/8L	M-10*i*D/8L	M-10*i*D
FANUC Robot M-10*i*D/10L	M-10*i*D/10L	
FANUC Robot M-10*i*D/12	M-10*i*D/12	
FANUC Robot M-20*i*A	M-20*i*A	M-20*i*A
FANUC Robot M-20*i*A/10L	M-20*i*A/10L	
FANUC Robot M-20*i*A/12L	M-20*i*A/12L	
FANUC Robot M-20*i*A/20T	M-20*i*A/20T	
FANUC Robot M-20*i*A/20M	M-20*i*A/20M	
FANUC Robot M-20*i*A/20MT	M-20*i*A/20MT	
FANUC Robot M-20*i*A/35M	M-20*i*A/35M	
FANUC Robot M-20*i*A/35MT	M-20*i*A/35MT	
FANUC Robot M-20*i*B/25	M-20*i*B/25	M-20*i*B
FANUC Robot M-20*i*B/25C	M-20*i*B/25C	
FANUC Robot M-20*i*B/35S	M-20*i*B/35S	
FANUC Robot M-20*i*D/25	M-20*i*D/25	M-20*i*D
FANUC Robot ARC Mate 100*i*C FANUC ROBOWELD 100*i*C	ARC Mate 100*i*C	ARC Mate 100*i*C
FANUC Robot ARC Mate 100*I*c/6L FANUC ROBOWELD 100*i*C/6L	ARC Mate 100*i*C/6L	
FANUC Robot ARC Mate 100*i*C /7L	ARC Mate 100*i*C/7L	
FANUC Robot ARC Mate 100*i*C /8L	ARC Mate 100*i*C/8L	
FANUC Robot ARC Mate 100*i*C/10S	ARC Mate 100*i*C/10S	
FANUC Robot ARC Mate 100*i*C/12	ARC Mate 100*i*C/12	
FANUC Robot ARC Mate 100*i*C/12S	ARC Mate 100*i*C/12S	
FANUC Robot ARC Mate 120*i*C FANUC ROBOWELD 120*i*C	ARC Mate 120*i*C	ARC Mate 120*i*C
FANUC Robot ARC Mate 120*i*C/10L FANUC ROBOWELD 120*i*C/10L	ARC Mate 120*i*C/10L	
FANUC Robot ARC Mate 120*i*C/12L	ARC Mate 120*i*C/12L	
FANUC Robot ARC Mate 120*i*C/20T	ARC Mate 120*i*C/20T	
FANUC Robot ARC Mate 100*i*D	ARC Mate 100*i*D	ARC Mate 100*i*D
FANUC Robot ARC Mate 100*i*D /8L	ARC Mate 100*i*D /8L	
FANUC Robot ARC Mate 100*i*D /10L	ARC Mate 100*i*D /10L	
FANUC Robot ARC Mate 120*i*D	ARC Mate 120*i*D	ARC Mate 120*i*D
FANUC Robot M-410*i*B/140H	M-410*i*B/140H	M-410*i*B
FANUC Robot M-410*i*B/160	M-410*i*B/160	
FANUC Robot M-410*i*B/300	M-410*i*B/300	
FANUC Robot M-410*i*B/450	M-410*i*B/450	
FANUC Robot M-410*i*B/700	M-410*i*B/700	
FANUC Robot M-410*i*C/110	M-410*i*C/110	M-410*i*C
FANUC Robot M-410*i*C/185	M-410*i*C/185	
FANUC Robot M-410*i*C/315	M-410*i*C/315	
FANUC Robot M-410*i*C/500	M-410*i*C/500	

Model	Abbreviation	
FANUC Robot M-420*i*A	M-420*i*A	
FANUC Robot M-421*i*A	M-421*i*A	
FANUC Robot M-430*i*A/2P	M-430*i*A/2P	M-430*i*A
FANUC Robot M-430*i*A/2PH	M-430*i*A/2PH	
FANUC Robot M-430*i*A/4FH	M-430*i*A/4FH	
FANUC Robot M-710*i*C/12L	M-710*i*C/12L	M-710*i*C
FANUC Robot M-710*i*C/20L	M-710*i*C/20L	
FANUC Robot M-710*i*C/20M	M-710*i*C/20M	
FANUC Robot M-710*i*C/45M	M-710*i*C/45M	
FANUC Robot M-710*i*C/50	M-710*i*C/50	
FANUC Robot M-710*i*C/50S	M-710*i*C/50S	
FANUC Robot M-710*i*C/50T	M-710*i*iC/50T	
FANUC Robot M-710*i*C/50E	M-710*i*C/50E	
FANUC Robot M-710*i*C/50H	M-710*i*C/50H	
FANUC Robot M-710*i*C/70	M-710*i*C/70	
FANUC Robot M-710*i*C/70T	M-710*i*C/70T	
FANUC Robot M-900*i*A/150P	M-900*i*A/150P	M-900*i*A
FANUC Robot M-900*i*A/200P	M-900*i*A/200P	
FANUC Robot M-900*i*A/260L	M-900*i*A/260L	
FANUC Robot M-900*i*A/350	M-900*i*A/350	
FANUC Robot M-900*i*A/400L	M-900*i*A/400L	
FANUC Robot M-900*i*A/600	M-900*i*A/600	
FANUC Robot M-900*i*B/280	M-900*i*B/280	M-900*i*B
FANUC Robot M-900*i*B/280L	M-900*i*B/280L	
FANUC Robot M-900*i*B/330L	M-900*i*B/330L	
FANUC Robot M-900*i*B/360	M-900*i*B/360	
FANUC Robot M-900*i*B/400L	M-900*i*B/400L	
FANUC Robot M-900*i*B/700	M-900*i*B/700	
FANUC Robot M-2000*i*A/900L	M-2000*i*A/900L	M-2000*i*A
FANUC Robot M-2000*i*A/1200	M-2000*i*A/1200	
FANUC Robot M-2000*i*A/1700L	M-2000*i*A/1700L	
FANUC Robot M-2000*i*A/2300	M-2000*i*A/2300	
FANUC Robot LR Mate 200*i*D	LR Mate 200*i*D	LR Mate 200*i*D
FANUC Robot LR Mate 200*i*D/4S	LR Mate 200*i*D/4S	
FANUC Robot LR Mate 200*i*D/4SC	LR Mate 200*i*D/4SC	
FANUC Robot LR Mate 200*i*D/4SH	LR Mate 200*i*D/4SH	
FANUC Robot LR Mate 200*i*D/7C	LR Mate 200*i*D/7C	
FANUC Robot LR Mate 200*i*D/7H	LR Mate 200*i*D/7H	
FANUC Robot LR Mate 200*i*D/7L	LR Mate 200*i*D/7L	
FANUC Robot LR Mate 200*i*D/7LC	LR Mate 200*i*D/7LC	
FANUC Robot LR Mate 200*i*D/7WP	LR Mate 200*i*D/7WP	
FANUC Robot F-100*i*A	F-100*i*A	
FANUC Robot F-200*i*B	F-200*i*B	
FANUC Robot CR-4*i*A	CR-4*i*A	
FANUC Robot CR-7*i*A	CR-7*i*A	CR-7*i*A
FANUC Robot CR-7*i*A/L	CR-7*i*A/L	
FANUC Robot CR-14*i*A	CR-14*i*A	CR-14*i*A
FANUC Robot CR-15*i*A	CR-15*i*A	
FANUC Robot CR-35*i*A	CR-35*i*A	

Correspondence of “Management Methods for Restricted Use of Hazardous Substances in Electrical and Electronic Products(China RoHS2)”

The names and contents of hazardous substances in the product

Part name		Hazardous substances					
		Lead (Pb)	Mercury (Hg)	Cadmium (Cd)	Hexavalent Chromium (Cr (VI))	Polybrominated biphenyls (PBB)	Polybrominated diphenyl ethers (PBDE)
Mechanical unit	Mechanical unit main body	✓	✓	✓	✓	✓	✓
	Motor	×	✓	✓	✓	✓	✓
	Cables	×	✓	✓	✓	✓	✓
Control unit	Teach pendant	×	✓	✓	✓	✓	✓
	Control unit main body	×	✓	✓	✓	✓	✓
	Cables	×	✓	✓	✓	✓	✓

This table is prepared in accordance with the provisions of SJ/T 11364.
✓: Indicates that said hazardous substance contained in all of the homogeneous materials for this part is below the limit requirement of GB/T 26572.
×: Indicates that said hazardous substance contained in at least one of the homogeneous materials used for this part is above the limit requirement of GB/T 26572.

Environmental Protection Use Period

In the following proper use environmental conditions, Environmental Protection Use Period is 20 years after manufacture.

Installation location : Indoor
Ambient temperature : 0℃ to 45℃
Ambient humidity : 75%RH or less
Vibration : 4.9m/s^2 (0.5G) or less
Atmosphere : It corrosive gas is not

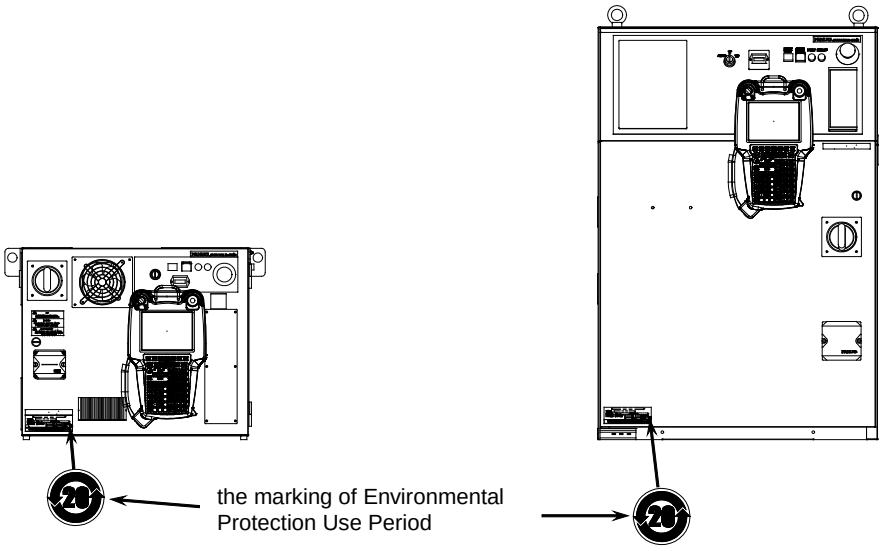

(A-cabinet) (B-cabinet)

TABLE OF CONTENTS

SAFETY PRECAUTIONS s-1

PREFACE p-1

I. MAINTENANCE

1 OVERVIEW 3

2 CONFIGURATION 4
2.1 EXTERNAL VIEW OF THE CONTROLLER 4
2.2 COMPONENT FUNCTIONS 11
2.3 CHECKS AND MAINTENANCE 13

3 TROUBLESHOOTING 15
3.1 POWER CANNOT BE TURNED ON 15
3.2 ALARM OCCURRENCE SCREEN 19
3.3 STOP SIGNALS 22
3.4 MASTERING 23
3.5 TROUBLESHOOTING USING THE ALARM CODE 25
3.6 FUSE-BASED TROUBLESHOOTING 83
3.7 TROUBLESHOOTING BASED ON LED INDICATIONS 90
3.7.1 Troubleshooting Using the LEDS on the Main Board 90
3.7.2 Troubleshooting by LEDs on Power Supply Unit 94
3.7.3 Troubleshooting by LED on the Emergency Stop Board 96
3.7.4 Troubleshooting by Alarm LEDs on the Process I/O Board 98
3.7.5 Troubleshooting by LEDs on the 6-Axis Servo Amplifier 100
3.7.6 Troubleshooting by LEDs on the αiPS 102
3.7.7 Troubleshooting by LEDs on the Sensor I/F Unit for Collaborative Robot 104
3.7.7.1 Status indication of the I/O Link *i* 104
3.7.7.2 Status indications of the distributed Link 105
3.7.8 Troubleshooting by LEDs on the αiSV 106
3.8 MANUAL OPERATION IMPOSSIBLE 110
3.9 LEDS ON UNITS SUPPORTING I/O Link *i* 111
3.9.1 Meanings of LEDs on Units Supporting I/O Link *i* 111

4 PRINTED CIRCUIT BOARDS 113
4.1 MAIN BOARD 113
4.2 EMERGENCY STOP BOARD
A-cabinet:A20B-2200-0650/B-cabinet:A20B-2102-0050 117
4.3 BACKPLANE 117
4.4 PROCESS I/O BOARD JA (A16B-2204-0010) 118
4.5 PROCESS I/O BOARD JB (A16B-2204-0011) 120
4.6 PROCESS I/O BOARD MA (A20B-2004-0380, A20B-2004-0381) 123
4.7 PROCESS I/O BOARD MB (A20B-2101-0730, A20B-2101-0731) 125

4.8 PROCESS I/O BOARD KA (A20B-2101-0560) 126
4.9 PROCESS I/O BOARD KB (A20B-2101-0561) 129

5 6-AXIS SERVO AMPLIFIERS 132
5.1 LEDS OF 6-AXIS SERVO AMPLIFIER 133
5.2 SETTING OF 6-AXIS SERVO AMPLIFIER 134
5.3 6-AXIS SERVO AMPLIFIER SPECIFICATIONS 135

6 POWER SUPPLY 138
6.1 BLOCK DIAGRAM OF THE POWER SUPPLY 138
6.2 TRANSFORMER 140
6.3 CHECKING THE POWER SUPPLY UNIT (A16B-2203-0910) 143

7 SENSOR I/F UNIT FOR COLLABORATIVE ROBOT 144

8 REPLACING UNITS 145
8.1 REPLACING THE PRINTED-CIRCUIT BOARDS 145
8.1.1 Replacing the Backplane Board (Unit) 146
8.1.2 Replacing the Power Unit and Printed-Circuit Boards on the Backplane 146
8.2 REPLACING CARDS AND MODULES ON THE MAIN BOARD 148
8.3 REPLACING THE E-STOP UNIT 153
8.4 REPLACING THE EMERGENCY STOP BOARD 154
8.5 REPLACING THE TRANSFORMER 154
8.6 REPLACING THE DISCHARGE RESISTOR UNIT 157
8.7 REPLACING 6-AXIS SERVO AMPLIFIERS 160
8.8 REPLACING I/O UNIT-MODEL A 164
8.8.1 Replacing the Base Unit of I/O Unit-MODEL A 164
8.8.2 Replacing a Module 164
8.9 REPLACING THE TEACH PENDANT 165
8.10 REPLACING THE CONTROL SECTION FAN MOTOR 166
8.11 REPLACING THE AC FAN MOTOR 167
8.11.1 Replacing the Heat Exchanger and Door Fan Unit (A-cabinet) 167
8.11.2 Replacing Rear Fan Unit (A-cabinet) 168
8.11.3 Replacing External Fan Unit and Door Fan (B-cabinet) 169
8.12 REPLACING THE BATTERY 170
8.12.1 Battery for Memory Backup (3 VDC) 170

II. CONNECTIONS

1 OVERVIEW 175

2 BLOCK DIAGRAM 176

3 ELECTRICAL CONNECTIONS 177
3.1 CONNECTIONS BETWEEN THE CONTROLLER AND THE MECHANICAL UNIT AND OTHER GENERAL CONTROLLER CONNECTIONS 177
3.2 CONNECTION TO FANUC I/O LINK AND FANUC I/O LINK *i* 179
3.2.1 Connection of I/O Link by Using JD1A Connector 179
3.2.1.1 Connection of the I/O Link cable by using JD1A connector 180
3.2.1.2 Cable connection diagram of the I/O Link cable when using JD1A connector 180

3.2.2 Connection of I/O Link and I/O Link *i* when Using JRL8 Connector 181
3.2.2.1 Connection of the I/O Link cable when using JRL8 connector..... 181
3.2.2.2 Cable connection diagram of the I/O Link cable by using JRL8 connector 182
3.3 EXTERNAL CABLE WIRING DIAGRAM 183
3.3.1 Robot Connection Cables.....183
3.3.2 Teach Pendant Cable 192
3.3.3 Connecting the Input Power 193
3.3.3.1 Connecting the input power cable 193
3.3.3.2 Leakage breaker..... 196
3.3.3.3 Check input voltage 196
3.3.3.4 ON/OFF timing by the breaker..... 196
3.3.4 Connecting the External Power Supply ON/OFF Switch 197
3.3.5 Connecting the External Emergency Stop.....199
3.3.6 Connecting the Non-Teaching Enabling (NTED) Signal (CRMA96)(For B-cabinet).....207
3.3.7 Connecting the Auxiliary Axis Brake (CRR65 A/B) 208
3.3.8 Connecting the Auxiliary Axis Over Travel (CRM68).....209

4 PERIPHERAL DEVICE, ARC WELDING, AND EE INTERFACES 210
4.1 PERIPHERAL DEVICE INTERFACE BLOCK DIAGRAM..... 213
4.1.1 When Process I/O Board JA/JB is Used (B-cabinet) 213
4.1.2 When Process I/O Board MA is Used (A-cabinet).....214
4.1.3 When Process I/O Board MB is Used (A-cabinet).....214
4.1.4 When Process I/O Board KA/KB is Used (A-cabinet).....215
4.1.5 When I/O Unit-MODEL A is Used.....216
4.1.5.1 In case of A-cabinet..... 216
4.1.5.2 In case of B-cabinet 217
4.1.6 When Two or More Process I/O Board and I/O Unit-MODEL A are Used 218
4.1.6.1 In case of B-cabinet 218
4.2 PROCESS I/O BOARD SIGNALS 218
4.3 INTERFACE FOR PERIPHERAL DEVICES..... 223
4.3.1 Peripheral Device and Controller Connection (Source Type DO) 223
4.3.2 Connection between the Process I/O Board MA and Peripheral Devices.....236
4.4 INTERFACE FOR WELDER..... 240
4.4.1 Connection between the Process I/O Board MB and Welding Machines 240
4.4.2 Connection between the Process I/O Board KA, KB and Welding Machines.....242
4.5 EE INTERFACE..... 245
4.5.1 Connection between the Mechanical Unit and End Effector 245
4.6 DIGITAL I/O SIGNAL SPECIFICATIONS 247
4.6.1 Peripheral Device Interface A 247
4.6.2 EE Interface.....249
4.6.3 I/O Signal Specifications for ARC-Welding Interface (A-cabinet/Process I/O Board MB) 250
4.7 SPECIFICATIONS OF THE CABLES USED FOR PERIPHERAL DEVICES AND WELDERS..... 253
4.7.1 Peripheral Device Interface A Cable (CRMA5*: Honda Tsushin, 50 pins).....253
4.7.2 Peripheral Device Interface B Cable (CRMA6*: Honda Tsushin, 20 pins).....253
4.7.3 Peripheral Device Interface B1 and B2 Cables (CRMA52; TE Connectivity 30 pin).....254
4.7.4 ARC Weld Connection Cables (CRW11; TE Connectivity 20 pin) 254
4.8 CABLE CONNECTION FOR THE PERIPHERAL DEVICES, END EFFECTORS, AND ARC WELDERS 255

4.8.1 Peripheral Device Connection Cable....255
4.8.2 Peripheral Device Cable Connector....257
4.8.3 End Effector Cable Connector (EE interface)....260
4.8.4 Recommended Cables....261
4.9 CONNECTION OF HDI....262
4.9.1 Connecting HDI....262
4.9.2 Input Signal Rules for the High-speed Skip (HDI)....263
4.10 CONNECTING THE COMMUNICATION UNIT....264
4.10.1 RS232C Interface....264
4.10.1.1 Interface....264
4.10.1.2 RS232C interface signals....265
4.10.1.3 Connection between RS232C interface and I/O device....265
4.10.2 Ethernet Interface....267
4.10.2.1 Connection to Ethernet....267
4.10.2.2 Leading out the Ethernet Cable....268
4.10.2.3 100BASE-TX Connector (CD38A, CD38B) / 1000BASE-T Connector (CD38C) Pin Assignments....269
4.10.2.4 Twisted-pair Cable Specification....269
4.10.2.5 Electrical Noise Countermeasures....272
4.10.2.6 Check Items at Installation....276
4.11 CONNECTING THE SENSOR CONNECTION CABLE....277

5 TRANSPORTATION AND INSTALLATION....278
5.1 TRANSPORTATION....278
5.2 PACKAGE....279
5.3 INSTALLATION....280
5.3.1 Installation Method....280
5.3.2 Assembly at Installation....287
5.4 INSTALLATION CONDITIONS....288
5.5 CAUTION ON EMC (ELECTROMAGNETIC COMPATIBILITY)....290
5.6 ADJUSTMENT AND CHECKS AT INSTALLATION....291
5.7 RESETTING OVERTRAVEL AND EMERGENCY STOP AT INSTALLATION....291
5.7.1 Peripheral Device Interface Processing....292
5.7.2 Resetting Overtravel....292
5.7.3 How to Disable/Enable HBK....292
5.7.4 How to Disable/Enable Pneumatic Pressure Alarm (PPABN)....293

APPENDIX

A SPECIFICATION LIST....297

B TOTAL CONNECTION DIAGRAM....348

C SPECIFICATIONS OF PERIPHERAL DEVICE INTERFACE....404
C.1 SIGNAL....404
C.2 SETTING COMMON VOLTAGE....406
C.3 I/O SIGNALS....406
C.3.1 Input Signals....406
C.3.2 Output Signals....409
C.4 SPECIFICATIONS OF DIGITAL INPUT/OUTPUT....412
C.4.1 Overview....412

C.4.2 Input/Output Hardware Usable in the R-30*i*B/R-30*i*B Plus Controller.....412
C.4.3 Software Specifications.....413

D OPTICAL FIBER CABLE.....414

E BRAKE RELEASE UNIT.....417
E.1 SAFETY PRECAUTIONS.....417
E.2 CONFIRMATIONS BEFORE OPERATION.....417
E.3 OPERATION.....419
E.3.1 In Case of Operating to the Robot.....419
E.3.2 Releasing the Brake of an Auxiliary Axis.....422
E.4 HOW TO CONNECT THE PLUG TO THE POWER CABLE (IN CASE OF NO POWER PLUG).....423
E.5 DIMENSION.....424
E.6 FUSE.....426
E.7 SPECIFICATIONS.....426

F HOW TO SECURE THE COMPACT FLASH MEMORY CARD TO THE MAIN BOARD.....427

G THE CONTROLLER FOR M-900*i*A/200P, M-2000*i*A.....429
G.1 CONFIGURATION.....429
G.2 TROUBLESHOOTING USING THE ALARM CODE.....431
G.2.1 Troubleshooting Using the Alarm Code.....431
G.2.2 Alarms Detected by Servo Amplifier.....432
G.2.3 Relationship of Axis.....433
G.3 INSTALLING THE CONNECTION CABLE BETWEEN CABINETS.....434
G.4 ROBOT CONNECTION CABLE.....435
G.5 CONNECTING THE INPUT POWER CABLE.....438
G.6 CONFIRMATIONS OF ON/OFF BY THE BREAKER FOR M-900*i*A/200P, M-2000*i*A.....439
G.7 CONNECTING THE EXTERNAL EMERGENCY STOP.....440
G.8 CONNECTING ADDITIONAL SAFETY I/O BOARD.....441
G.9 TOTAL CONNECTION DIAGRAM.....442

H INSTRUCTION FOR STACKING A-CABINETS.....475

I TEACH PENDANT DISCONNECT FUNCTION (OPTION).....476
I.1 CONFIGURATION.....476
I.2 PROCEDURE OF TEACH PENDANT DISCONNECT.....477
I.2.1 Teach Pendant Disconnect.....477
I.2.2 Teach Pendant Connect.....477

J INSTRUCTION FOR TERMINAL BLOCK.....479

K SEALING OF THE CABLE ENTRANCE OF THE CABINET.....481
K.1 CABLE ENTRANCE FOR A-CABINET.....481
K.2 HOLES OF CABLE SEAL BLOCK FOR CABLE.....482
K.3 SUITABLE CABLE DIAMETER.....483
K.4 ADJUST THE CABLE DIAMETER.....483

L REPLACING THE PROTECTION SHEET 484

M FLEX CABLE CONDITION 485

M.1 MINIMUM BEND RADIUS OF CABLE 485
M.2 FLEX CABLE 485
M.3 CABLE CARRIER 485
M.4 CABLE DURABILITY TEST 485
M.5 EXPERIMENTAL RESULT 485
M.6 WRING IN THE CABLE CARRIER 486

I. MAINTENANCE

1 OVERVIEW

This manual is applied to the R-30*i*B/R-30*i*B Plus controller (called R-30*i*B/R-30*i*B Plus).

R-30*i*B/R-30*i*B Plus has different controller depending on the required standards.

NRTL controller: To meet UL/CSA standard.
CE controller: To meet Machinery Directive, Low voltage Directive and EMC Directive to cover the requirement of CE standard.
CE/NRTL controller: To meet both CE standard and UL/CSA standard.

This manual covers these controllers of the R-30***i***B/R-30*i*B Plus.
The difference of NRTL, CE and CE/NRTL controller from the Basic controller is small as shown in Table 1 (ex. EMC parts, Breakers).
And the specific descriptions of the CE and NRTL controllers are noted in this manual.

Table 1. Applied standards

	Functional safety	EMC Standard	Robot Standard Electrical Standard	Requirement	Difference
Basic controller	ISO 13849-1 IEC 61508	-	-	-	-
NRTL controller		-	UL1740 CAN/CSA Z434 NFPA79	UL standard CSA standard •USA and Canada	•UL listed main breaker •E-stop unit with UL listed breaker •600V input circuit for Canada
CE controller		EN 55011 EN 61000-6-2 EN 61000-6-4	EN/ISO 10218-1 EN 60204-1	CE standard •Europe	•Noise filter •EMC Cabinet •Shielded cable
CE/NRTL controller			UL1740 CAN/CSA Z434 NFPA79 EN/ISO 10218-1 EN 60204-1	CE standard •Europe UL standard CSA standard •USA and Canada	•Noise filter •EMC Cabinet •Shielded cable •UL listed main breaker •E-stop unit with UL listed breaker •600V input circuit for Canada can not be supported.

This manual describes the maintenance and connection of R-30*i*B/R-30*i*B Plus.

・Maintenance Part: Troubleshooting, and the setting, adjustment, and replacement of units
・Connection Part: Connection of R-30*i*B/R-30*i*B Plus to the robot mechanical unit and peripheral devices, and installation of the controller

⚠ **WARNING**
Before you enter the robot working area, be sure to turn off the power to the controller or press the EMERGENCY STOP button on the operator's panel or teach pendant.
Otherwise, you could injure personnel or damage equipment.

2 CONFIGURATION

2.1 EXTERNAL VIEW OF THE CONTROLLER

The appearance and components might differ slightly depending on the controlled robot, application, and options used.
Fig.2.1 (a) shows an external view of two R-30*i*B/R-30*i*B Plus controller cabinet variations.
Fig.2.1 (b) to (g) show the construction of the R-30*i*B/R-30*i*B Plus controller.
Fig.2.1 (h) to (k) show the external view of the operator's panel and teach pendant.

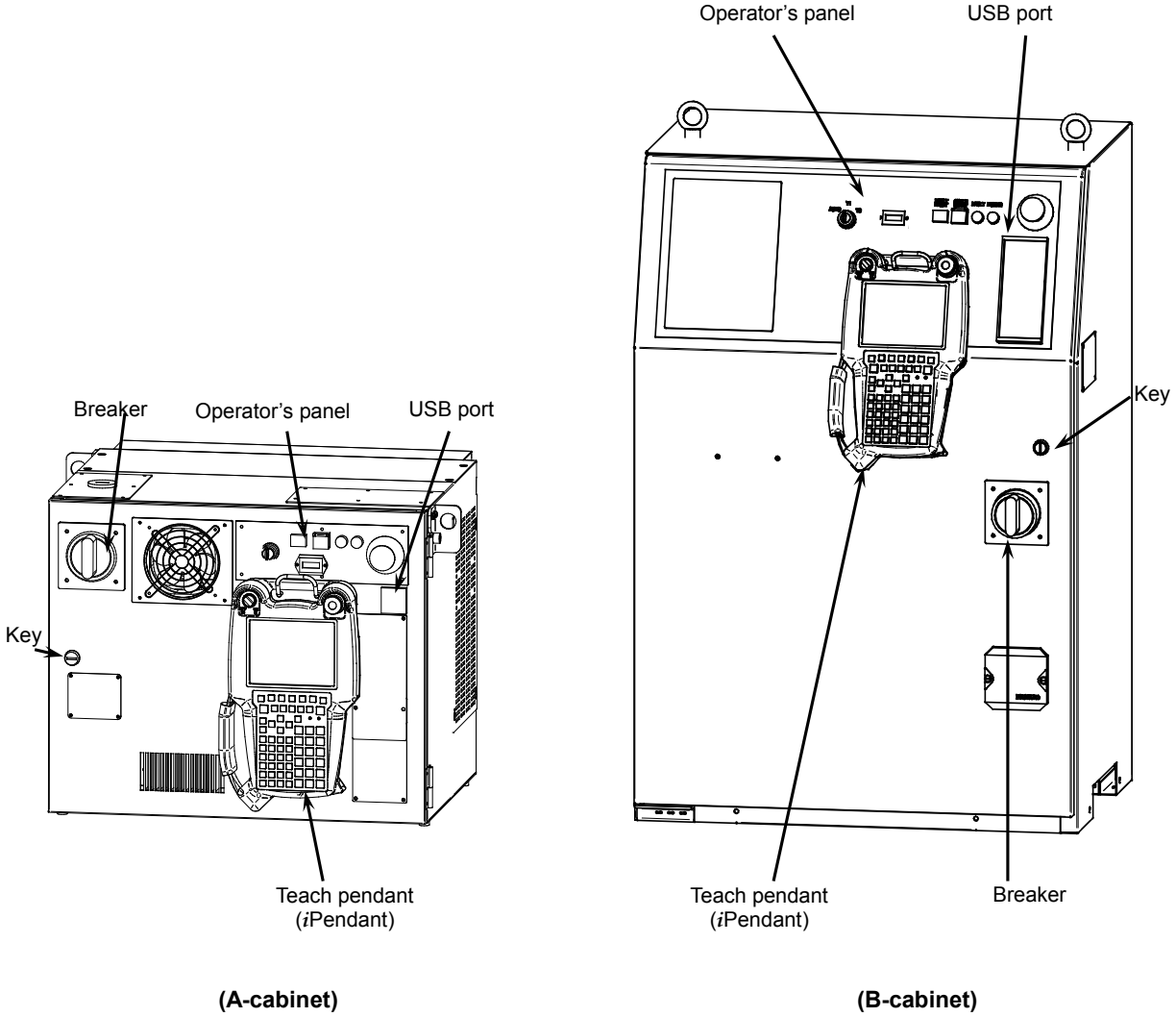

Fig.2.1 (a) External view of the R-30*i*B/R-30*i*B Plus controller

NOTE
Lock the door with the key before using the controller.
Refer to "WARNING&CAUTION REGARDING USE OF CONTROLLER" in "SAFETY PRECAUTIONS" and Section 2.3 in MAINTENANCE.

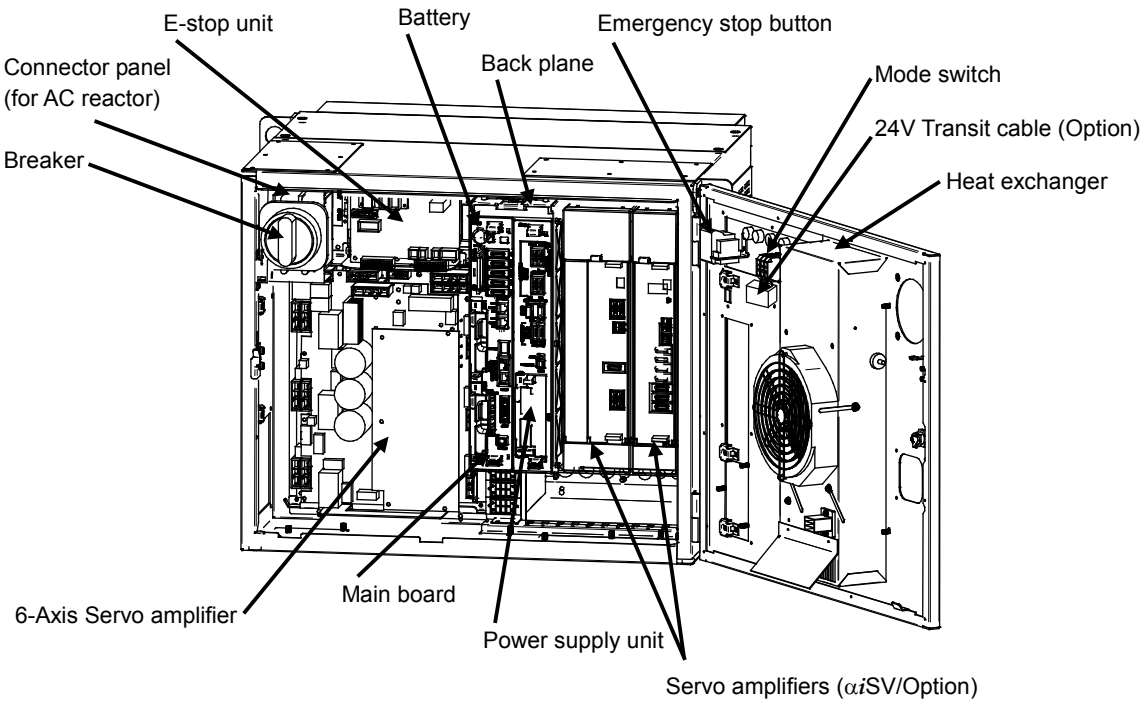

Fig.2.1 (b) R-30*i*B/R-30*i*B Plus A-cabinet interior (Front)

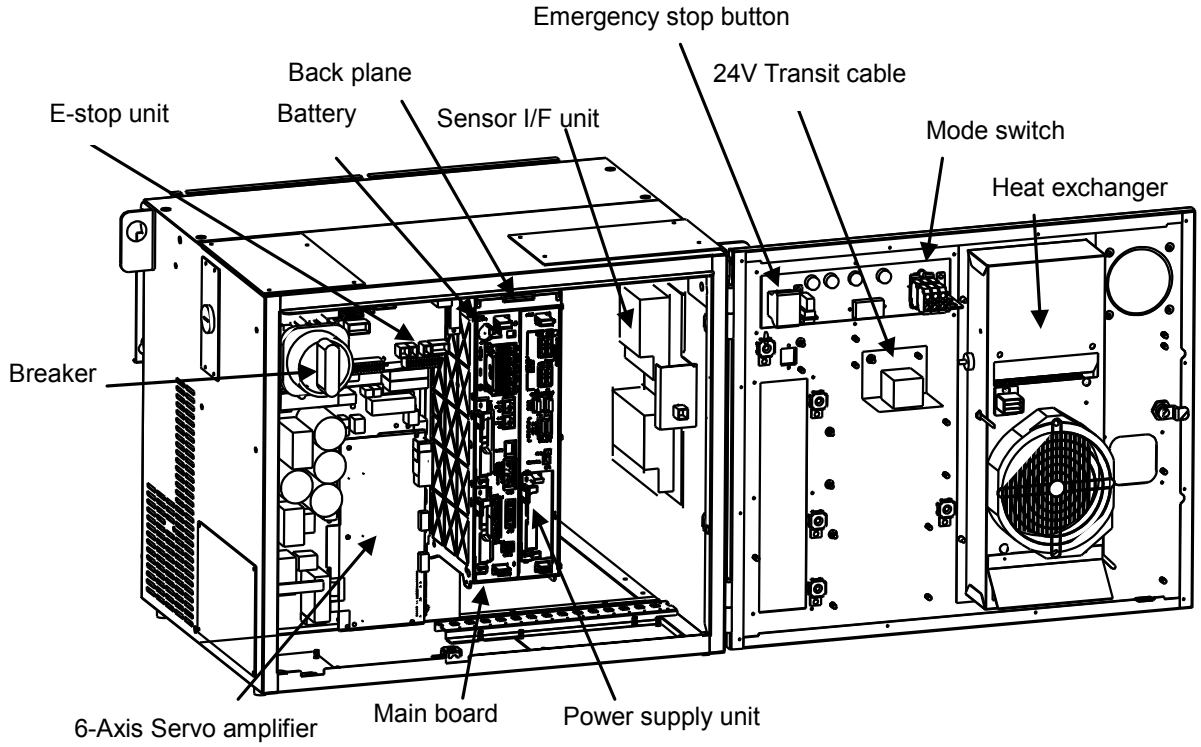

Fig.2.1 (c) R-30*i*B/R-30*i*B Plus A-cabinet interior (Front) (CR-4*i*A, CR-7*i*A, CR-14*i*A, CR-15*i*A, CR-35*i*A)

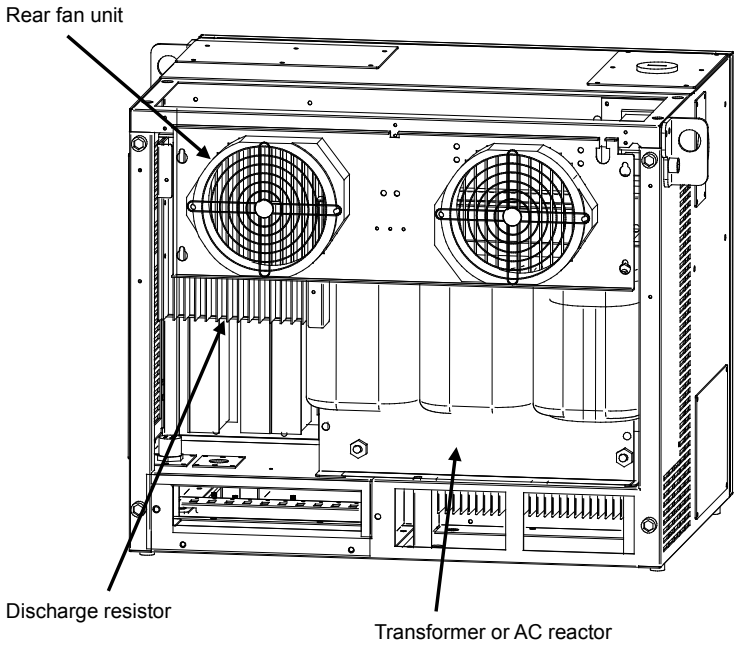

Fig.2.1 (d) R-30*i*B/R-30*i*B Plus A-cabinet interior (Rear)

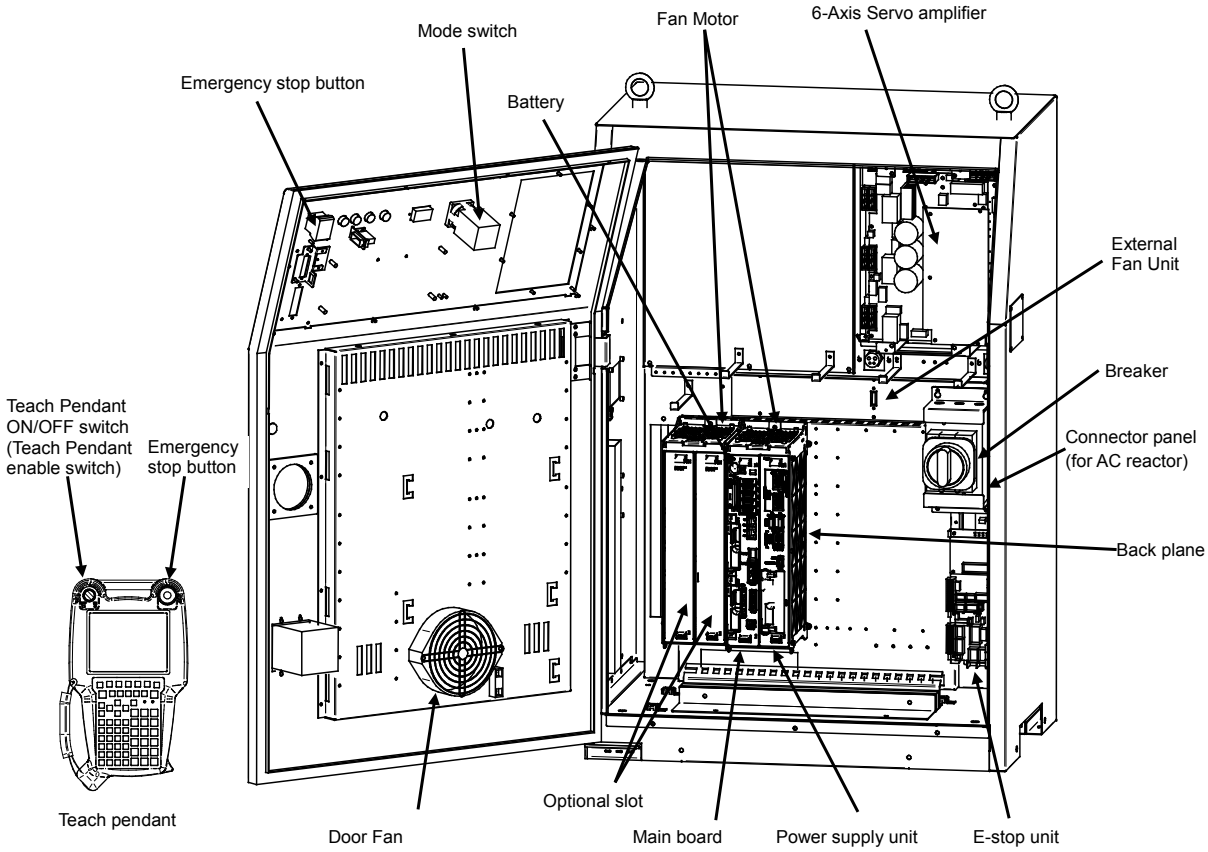

Fig.2.1 (e) R-30*i*B/R-30*i*B Plus B-cabinet interior (Front)

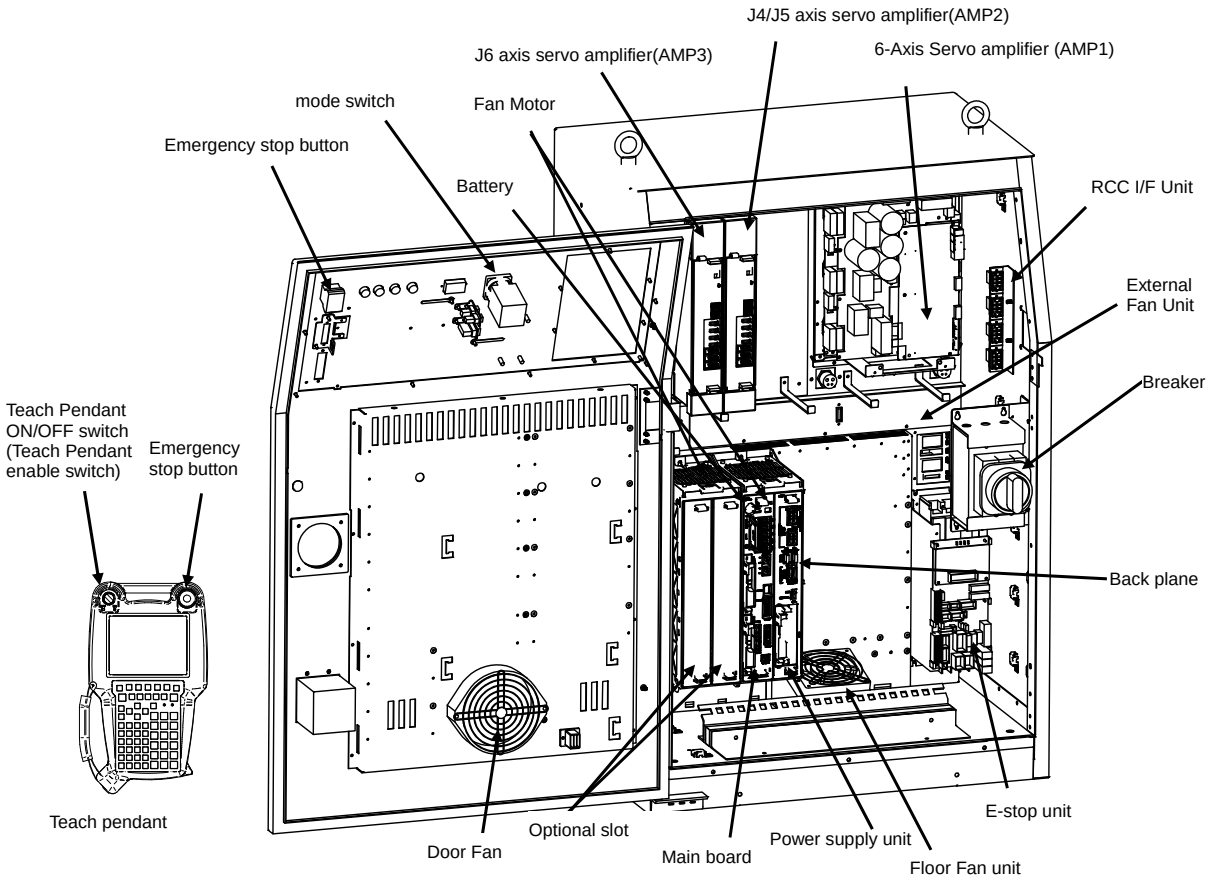

Fig.2.1 (f) R-30*i*B/R-30*i*B Plus B-cabinet interior (Front)
(M-900*i*A/400L, M-900*i*A/600, M-900*i*B/700, M-900*i*B/400L)

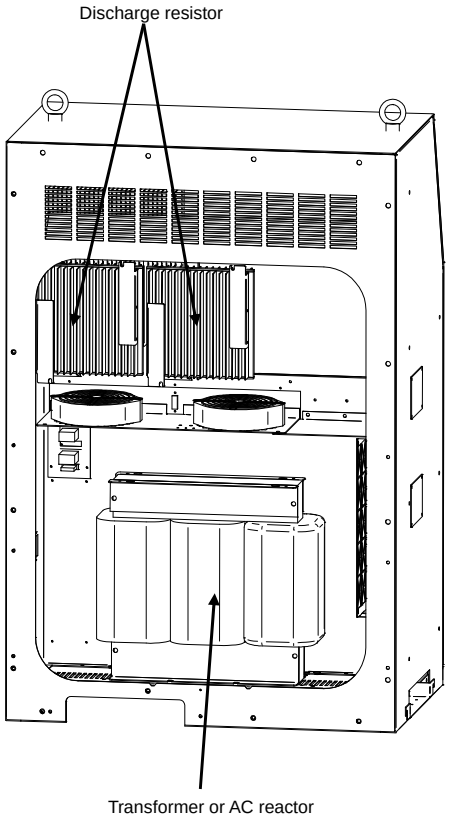

Fig.2.1 (g) R-30*i*B/R-30*i*B Plus B-cabinet interior (Rear)

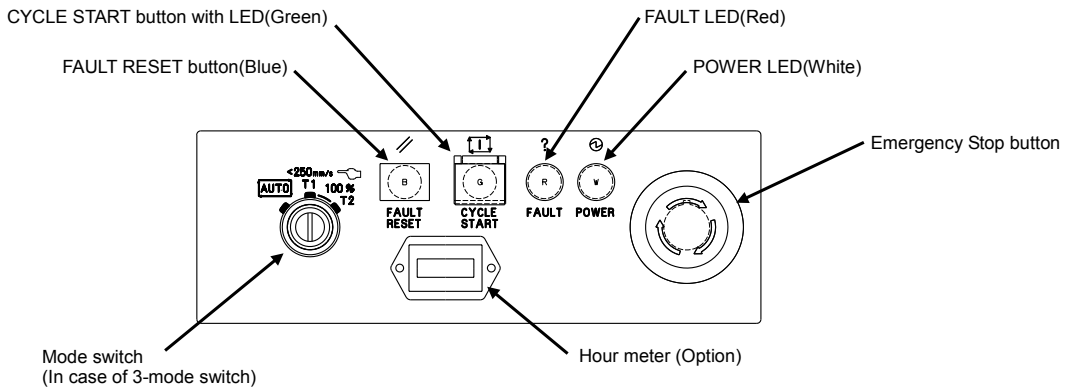

Fig.2.1 (h) R-30*i*B/R-30*i*B Plus A-cabinet operator's panel

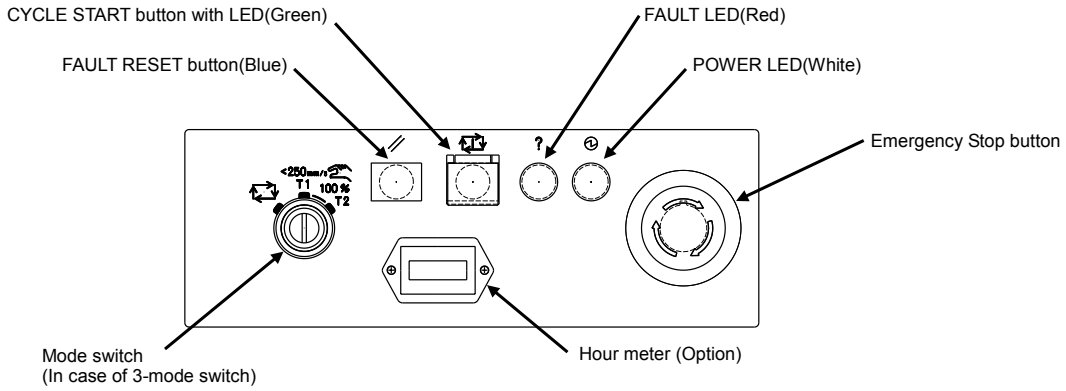

Fig.2.1 (i) R-30*i*B/R-30*i*B Plus A-cabinet symbol operator's panel

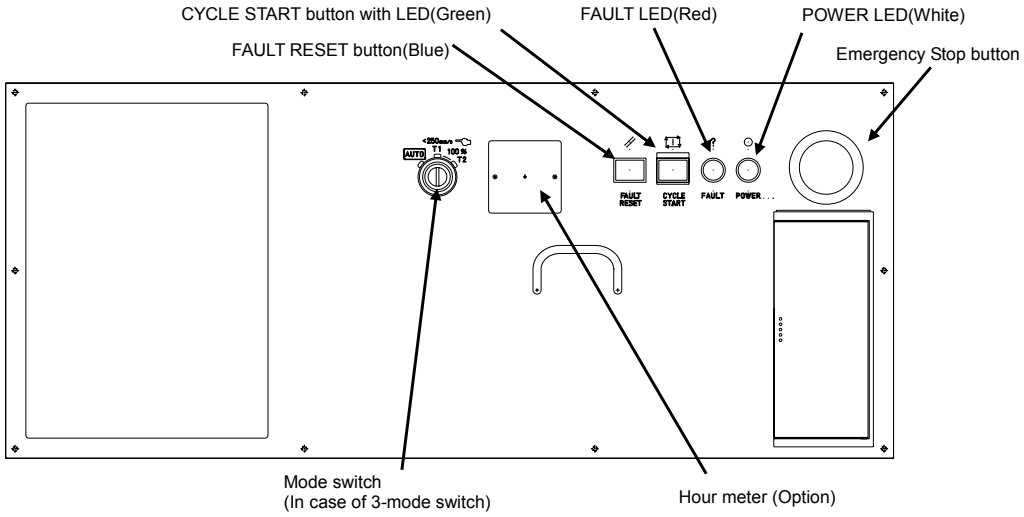

Fig.2.1 (j) R-30*i*B/R-30*i*B Plus B-cabinet operator's panel

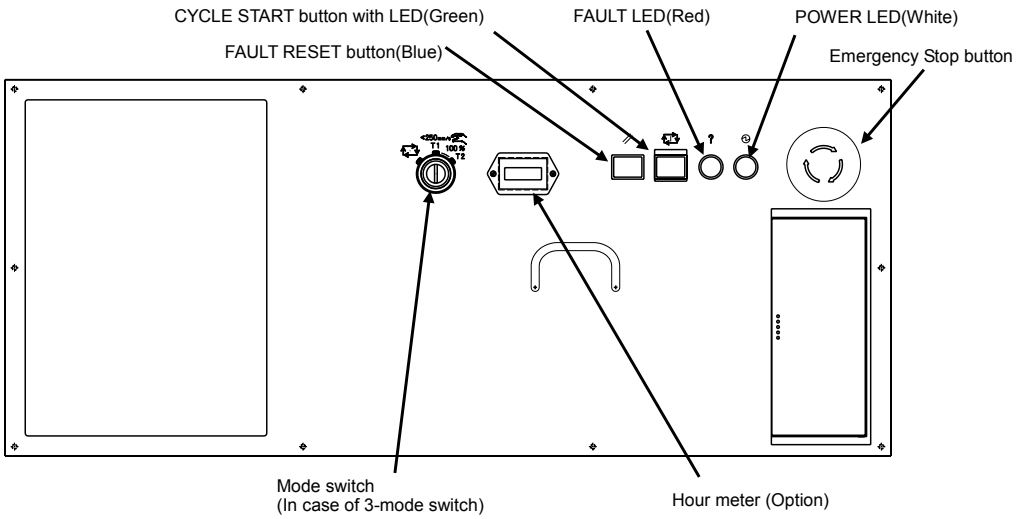

Fig.2.1 (k) R-30*i*B/R-30*i*B Plus B-cabinet operator's panel

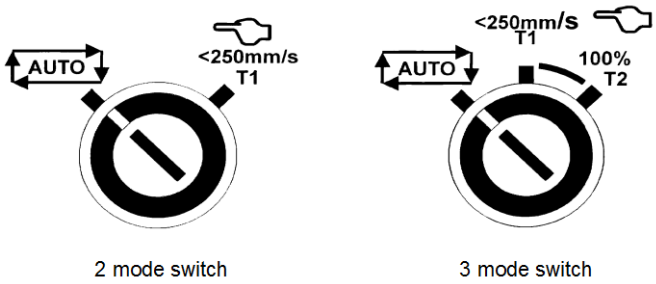

Fig.2.1 (l) Mode switch

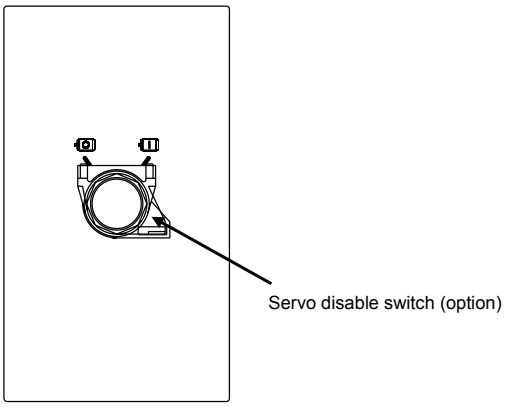

Fig.2.1 (m) R-30*i*B/R-30*i*B Plus symbol servo disable panel (option)

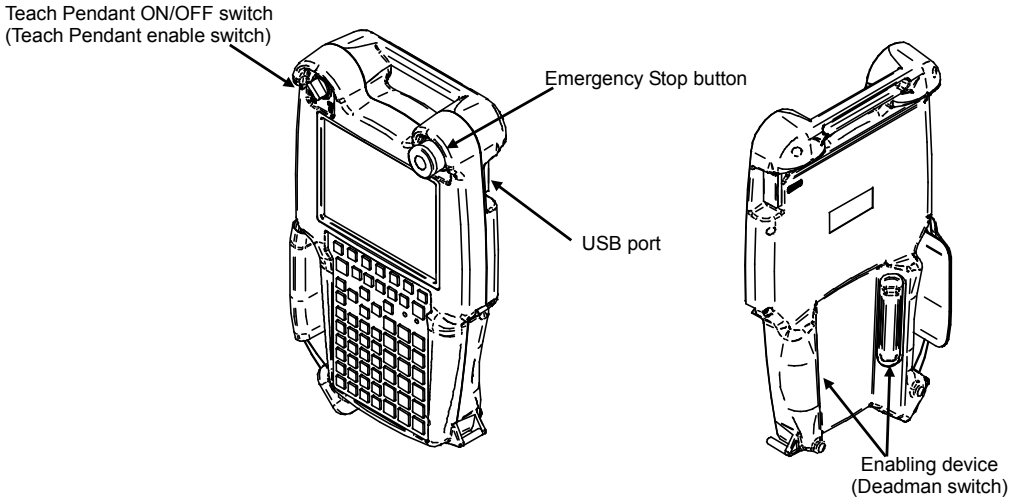

Fig.2.1 (n) Teach pendant (*i*Pendant)

Symbol	Description
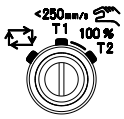	Enables the user to select operation mode suitable to the robot operation conditions or the status of its use. Automatic operation mode ( ) Teach mode ( )
	Release the alarm state.
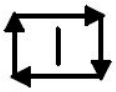	Starts the currently selected program. Lit while the program is being started.
	Indicates that the power of the controller is ON.
	Indicates the alarm state. Press the alarm release button to release the alarm state.
	Servo disable switch, disable the robot operation.
	Servo disable switch, enable the robot operation.

2.2 COMPONENT FUNCTIONS

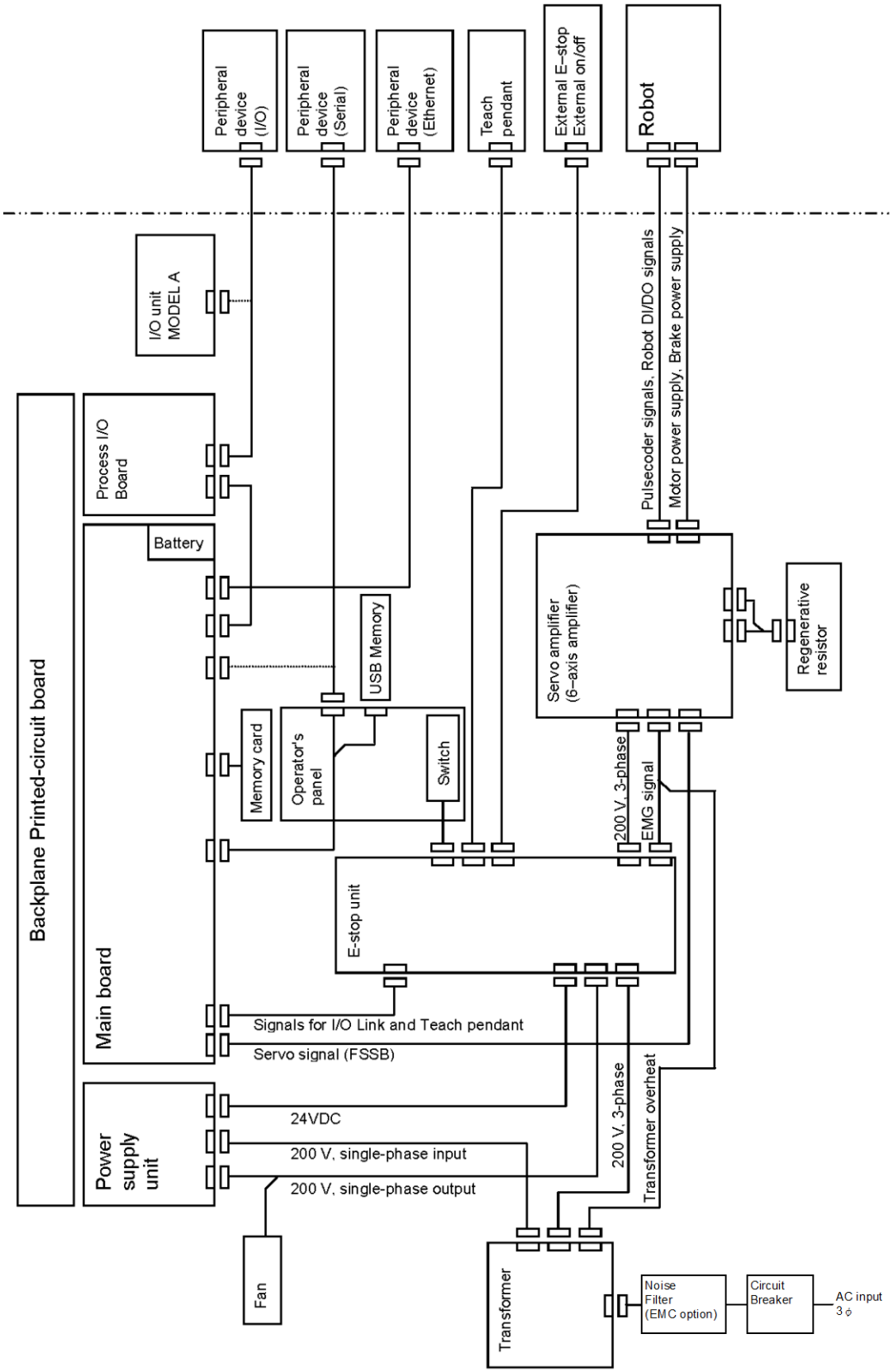

Fig.2.2 (a) Block diagram of the R-30*i*B/R-30*i*B Plus

- Main board
  The main board contains a microprocessor, its peripheral circuits, memory, and operator's panel control circuit. The main CPU controls servo mechanism positioning.
- I/O printed circuit board, FANUC I/O Unit MODEL-A
  Various types of printed circuit boards are provided for applications including a process I/O board. The FANUC I/O unit MODEL-A can also be installed. When it is used, various I/O types can be selected. These are connected with FANUC I/O Link.
- E-stop unit
  This unit controls the emergency stop system of the robot controller. It also has user interface terminals of safety relevant signals, external on/off signals etc.
- Power supply unit
  The power supply unit converts the AC power to various levels of DC power.
- Backplane printed circuit board
  The various control printed circuit boards are mounted on the backplane printed circuit board.
- Teach pendant
  All operations including robot programming are performed with this unit. The controller status and data are indicated on the liquid-crystal display (LCD) on the pendant.
- 6-Axis Servo amplifier
  The servo amplifier controls servomotor, Pulsecoder signal, brake control, overtravel and hand broken.
- Operator's panel
  Buttons and LEDs on the operator's panel are used to start the robot and to indicate the robot status. The panel has an USB interface for the serial interface to an external device.
- Transformer
  The supply voltage is converted to an AC voltage required for the controller by the transformer.
- Fan unit, heat exchanger
  These components cool the inside of the controller.
- Circuit breaker
  If the electric system in the controller malfunctions, or if abnormal input power causes high current in the system, the input power is connected to the circuit breaker to protect the equipment.
- Discharge resistor
  To discharge the counter electromotive force from the servomotor, connect a discharge resistor to the servo amplifier.

2.3 CHECKS AND MAINTENANCE

Daily maintenance and periodic maintenance/inspection ensure reliable robot performance for extended periods of time.

(1) Daily maintenance
Before operating the system each day, clean each part of the system and check the system parts for any damage or cracks. Also, check the following:
(a) Before operation
Check the cable connected to the teach pendant for excessive twisting. Check the controller and peripheral devices for abnormalities.
(b) After operation
At the end of operation, return the robot to the specified position, and then turn off the controller. Clean each part, and check for any damage or cracks. If the ventilation port of the controller is dusty, clean it.
(c) Make sure that the controller is closed securely with a key.

(2) Check after one month
Check that the fan is rotating normally. If the fan has dirt and dust built up, clean the fan according to step (3) described below for inspection to be performed every 6 months.

(3) Periodic inspection performed every six months
(a) Please refer to the Section 8.5, and then remove any dirt and dust from the inside of the transformer compartment. Wipe off dirt and dust from the fan and transformer.
(b) To confirm that the safety function can work correctly, please check the alarm detection by inputting emergency stop, or please check the system operation by cycling power (refer to the following CAUTION).
(c) ・Open the door and check the door gasket for damage or crushing.
・Check the controller for abnormal contamination.
If there is any dirt, investigate the cause and take necessary measures, then clean the dirt.
・Check that there is no gap around the door gasket in the door locked state.
・According to Appendix K, check that there is no gap in the cable entrance of the cabinet.

(4) Battery daily check
Replace the battery on the front panel of the main board every 4 years. Please refer to the Section 8.12.

(5) Maintenance tools
The following maintenance tools are recommended:
(a) Measuring instruments
AC/DC voltmeter (A digital voltmeter is sometimes required.)
Oscilloscope with a frequency range of 5 MHz or higher, two channels
(b) Tools
Cross-head screwdrivers: Large, medium, and small
Straight-head screwdrivers: Large, medium, and small
Nut driver set (Metric)
Pliers
Cutting pliers
Diagonal cutting pliers

(6) Automatic backup
When the automatic backup area (FRA:) of F-ROM in the controller is specified as a backup copy destination and automatic backup is performed frequently, F-ROM may be damaged. If the automatic backup is performed frequently, use the external storage device.

⚠ **CAUTION**

R-30*i*B/R-30*i*B Plus is evaluated as a system with the high demand mode of operation defined in IEC61508. To confirm that the safety function can work correctly, please check the alarm detection by inputting emergency stop twice or more in a year, or please check the system operation by cycling power twice or more in a year.

⚠ **WARNING**

1 The R-30*i*B/R-30*i*B Plus controller has a sealed structure, it is designed so that dust, oil mist, conductive foreign particulate, etc. around the controller do not enter the interior of the controller.
Whether or not the controller is in operation, if the door is not locked with the key, the original sealing capacity of the controller cannot be secured. In this case, failure may occur due to internal contamination, and there is the risk of electric shock, electric leakage, and fire due to insulation deterioration.
2 Be sure to lock the controller securely with the key to prohibit that the person except the trained maintenance worker opens the door of the controller.
3 To prevent electric shock, do not energize the controller while the door is open.
4 After connecting input power cable, in order to avoid turning on the main breaker, padlocking can be installed to the breaker handle.

3 TROUBLESHOOTING

This chapter describes the checking methods and corrective actions for alarms due to hardware related trouble by alarm code. Refer to the OPERATOR'S MANUAL (ALARM CODE LIST) (B-83284EN-1) for a list of alarms and release alarms.

3.1 POWER CANNOT BE TURNED ON

Check and Corrective action		Figure
(Check 1)	Check the circuit breaker.	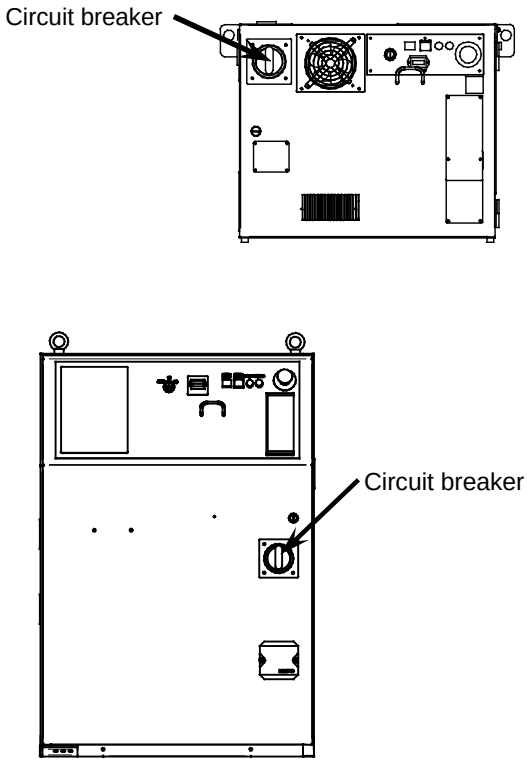
(Corrective action)	a) If circuit breaker is OFF, turn on the circuit breaker. b) If the circuit breaker has tripped (the circuit breaker trip state is identical to OFF state), find the cause by referencing the total connection diagram presented in the appendix.	

Check and Corrective action		Figure
(Check 2)	Check whether the LED (ALM: red) on the power supply unit is on.	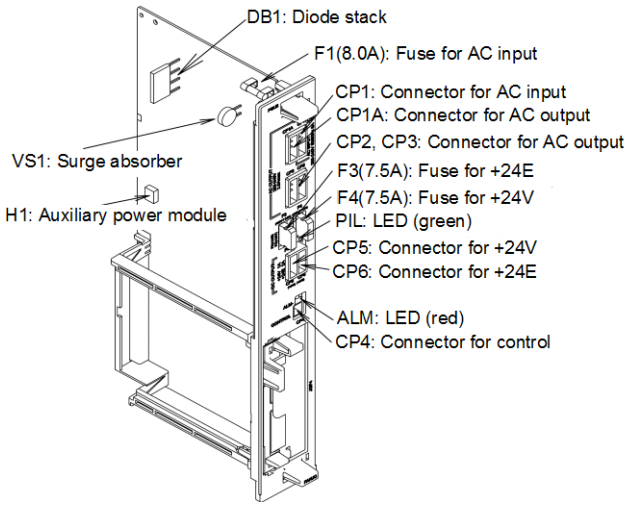
(Corrective action 1)	If the LED (ALM:red) on the power supply unit is off, see Check 3. If the LED (ALM:red) on the power supply unit is on, verify that the +24V external connection cable is not connected to 0V or ground. If the problem still exists even though it does not have ground fault, check the power supply unit using the following procedure: a) Check Fuse F4. If the fuse is blown, see Corrective action 4. b) Fuse F4 is not blown. The power supply unit, main board or process I/O printed circuit board may be faulty. c) Replace the power supply unit. d) If a system using the process I/O printed circuit board, replace the process I/O printed circuit board. e) See Corrective action 3.	
(Corrective action 2)	If the power supply unit is not faulty, replace the emergency stop board.	
(Corrective action 3)	Before executing this action, perform a complete controller backup to save all your programs and settings. If the emergency stop board is not faulty, replace the Main board.	
(Corrective action 4)	Causes of blown fuse F4 and corrective action. The device connected to connector CP5 of the power supply unit may be faulty. Find the cause by referencing the total connection diagram presented in the appendix. If no device is connected to CP5 or the connected device is normal, the +24 V power used in a printed circuit board connected to the backplane is faulty. See Corrective action 3.	

Check and Corrective action		Figure
(Check 3)	Check whether the LED (PIL: green) on the power supply unit is on.	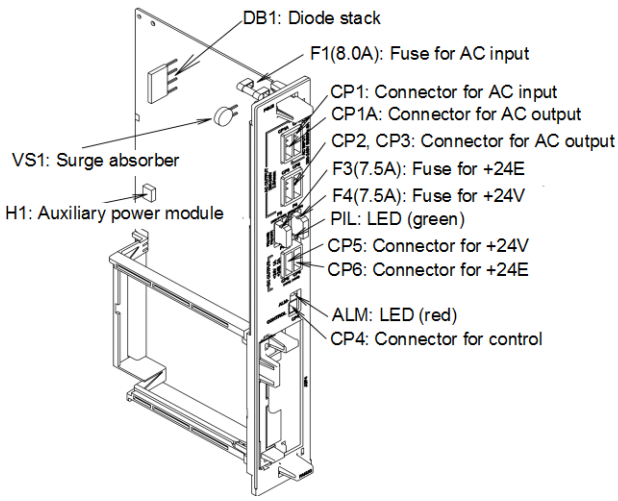
(Corrective action1)	If the LED (PIL: green) is on, See Corrective action 3. If the LED (PIL: green) is not on, 200 VAC is not supplied to the power supply unit. Check whether 200 VAC is supplied to power supply unit. Check the voltage between the 1 pin and 2 pin of the CP1 connector. If 200 VAC is not supplied, check the primary input voltage to the controller is within the rated voltage and phase of the primary input voltage is not lack. If there is no problem, the fuse in the transformer may have blown. Before you start to replace the transformer, turn off the circuit breaker. Replace the transformer. If 200 VAC is supplied, it is likely that fuse F1 in the power supply unit or the fuse F2 in the AC reactor has blown. Find the cause of the blown fuse. Before you start troubleshooting, turn off the circuit breaker. a) If fuse F1 or F2 has blown, see Corrective action 2. b) If fuse F1 or F2 has not blown, replace the power supply unit.	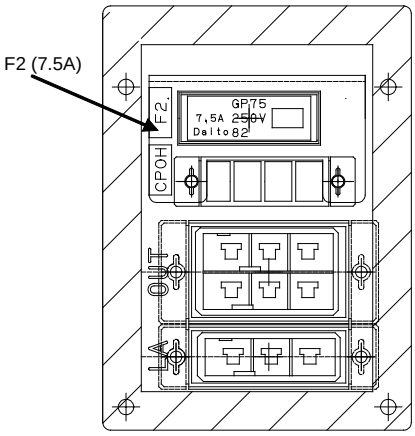 AC reactor with connector panel
(Corrective action 2)	Causes of blown fuse F1, F2 and corrective action a) Check the units (fans), printed-circuit board and cables connected to the CP2 and CP3 connectors of the power supply unit to see if there is any short circuit. b) Replace the power supply unit.	

Check and Corrective action		Figure
(Corrective action 3)	Check whether the connector (JRS19) on the main board or the connector (JRS19 or JRS20) on the emergency stop board is connected properly.	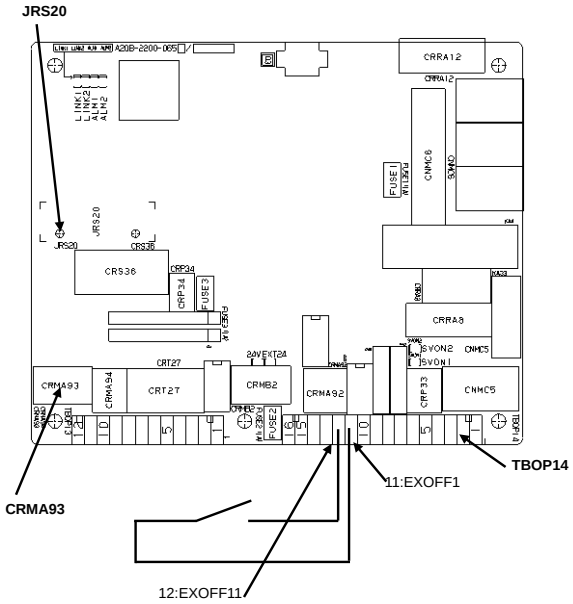 A-cabinet
(Corrective action4)	Check whether the EXOFF1 and EXOFF11 signals are connected to the terminal block on the emergency stop board. If the external ON/OFF switch is used, verify that the ON/OFF switch is functioning properly. a) If the external ON/OFF function is not used, verify that the connection between EXOFF1 and EXOFF11 is short-circuit. b) If the external ON and OFF lines are already used, check the mating contacts and the cable.	
(Corrective action 5)	Check whether the jumper connector of the CRMA93 is connected to the emergency stop board.	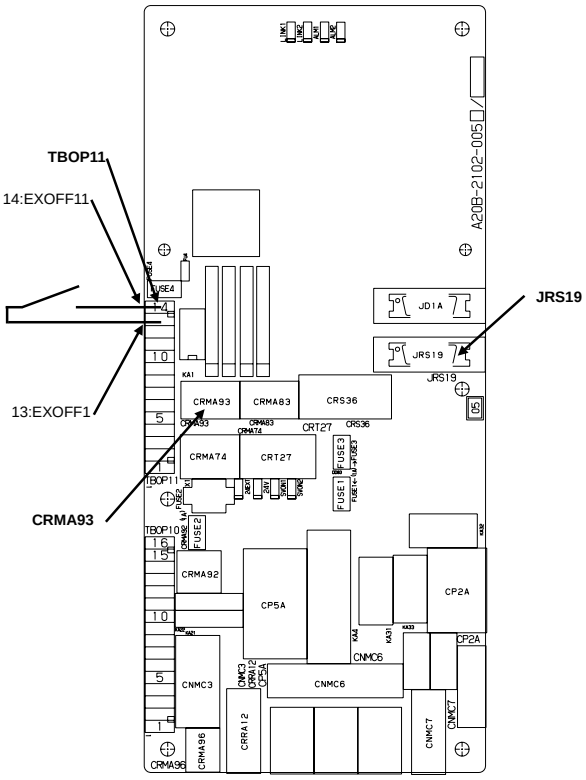 B-cabinet

3.2 ALARM OCCURRENCE SCREEN

The alarm occurrence screen displays only the alarm that occurs currently. If an alarm reset signal is input to reset the alarm conditions, the alarm occurrence screen displays the message "PAUSE or more serious alarm has not occurred."

The alarm screen displays only the alarms (if any) that occur after the most recently entered alarm reset signal. To erase all alarm displays from the alarm screen, press the CLEAR key (+ shift) on the alarm history screen.

The alarm screen is intended to display only alarms with severity is equal or higher than PAUSE. It will not display WARN, NONE, or a reset. It is possible to disable PAUSE and some of the more serious alarms from being displayed by setting the $ER_NOHIS system variable appropriately.

If two or more alarms have occurred at the same time, the display begins with the most recent alarm.

Up to 100 lines can be displayed.

If an alarm has a cause code, it is displayed below the line indicating the alarm.

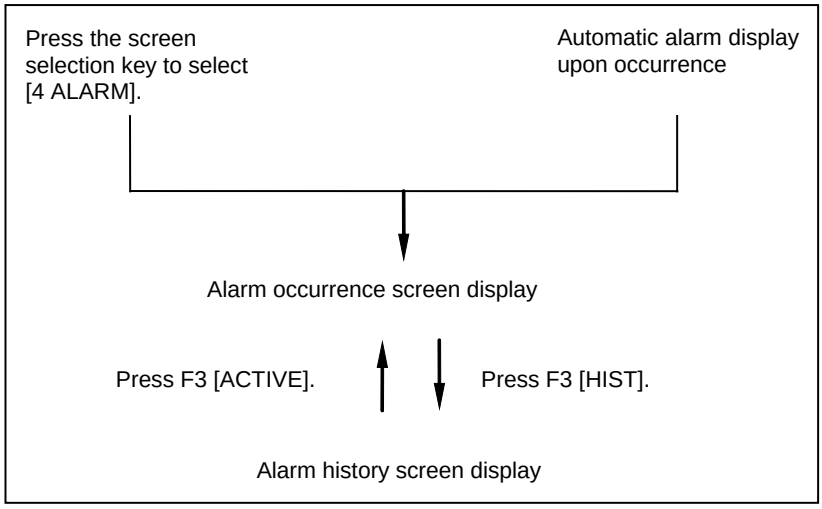

Fig.3.2 (a) Alarm screen and alarm history screen display procedure

Displaying the alarm history/alarm detail information

Step

(1) Press [MENU] key to display the screen menu.

(2) Select [ALARM].
You will see a screen similar to the following.
If an alarm has occurred, however, the alarm screen appears automatically.

```
INTP-224 (TEST1, 6)Jump label failed
MEMO-027 Specified line does not exis JOINT   30%
Alarm : Active
                                        1/2
  1 INTP-224 (TEST1, 6) Jump label faile
    MEMO-027 Specified line does not exi
[ TYPE ] [ VIEW ]  HIST  RES_1CH
```

Alarm detail code

(3) To display the alarm history screen, press F3, [HIST].
Press F3 [ACTIVE] again, the alarm screen appears.

```
Alarm : Hist
                                        1/25
  1 INTP-224 (TEST1, 6) Jump label faile
  2 R E S E T
  3 SRVO-007 External emergency stop
  4 SRVO-001 Operator panel E-stop
  5 R E S E T
  6 SRVO-001 Operator panel E-stop
  7 SRVO-012 Power failure recovery
  8 INTP-127 Power fail detected
  9 SRVO-047 LVAL alarm (Group:1 Axis:5)
 10 SRVO-047 LVAL alarm (Group:1 Axis:4)
 11 SRVO-002 Teach pendant E-stop
[ TYPE ] [ VIEW ] ACTIVE  CLEAR  DETAIL
```

NOTE
The latest alarm is assigned number 1. To view messages that are currently not on the screen, press the F5, DETAIL, and then press the right arrow key.

(4) To display the alarm detail screen, press F5, [DETAIL].

```
Alarm : Hist
    DETAIL Alarm
    INTP-224 (TEST1, 6) Jump label failed
    MEMO-027 Specified line does not exist
    STOP.L    21-NOV-11 12:16
    Alarm : Hist
      1 INTP-224 (TEST1, 6) Jump label faile
      2 R E S E T
      3 SRVO-007 External emergency stop
      4 SRVO-001 Operator panel E-stop
      5 R E S E T
      6 SRVO-001 Operator panel E-stop
      7 SRVO-012 Power failure recovery

    [ TYPE ] [ VIEW ] ACTIVE  CLEAR  DETAIL
```

(5) To return to the alarm history screen, press the [PREV] key.

(6) To delete all the alarm histories, press and hold down the [SHIFT] key, then press F4, [CLEAR].

NOTE

When system variable $ER_NOHIS = 1, NONE alarms or WARN alarms are not recorded. When $ER_NOHIS=2, resets are not recorded in the alarm history. When $ER_NOHIS=3, resets, WARN alarms, and NONE alarms are not recorded.

The following map indicates teach pendant operations used to check an alarm.

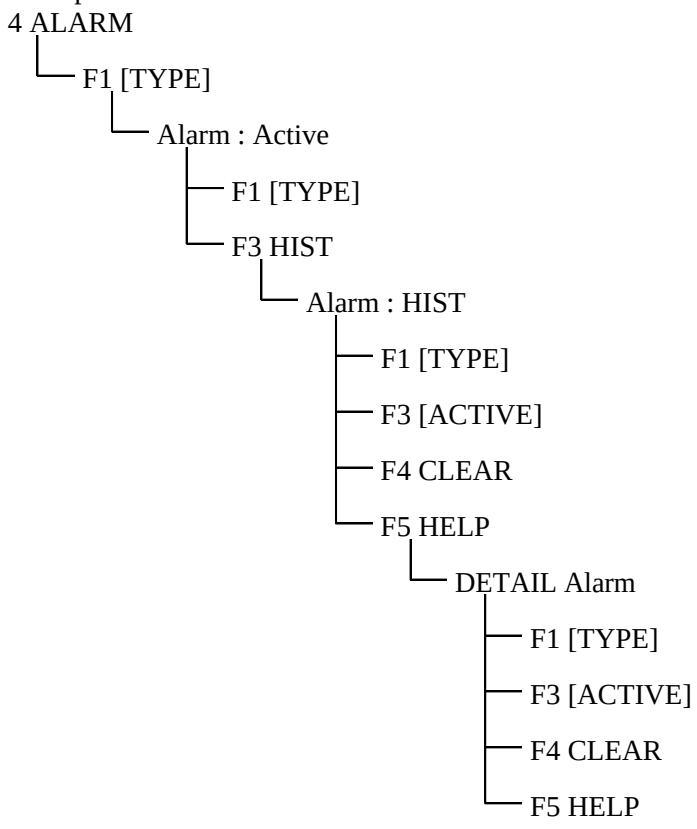

3.3 STOP SIGNALS

The stop signal screen indicates the state of signals related to safety. To be specific, the screen indicates whether each stop signal is currently on. This screen is for viewing only and therefore you cannot change the state of any stop signal on this screen.

Table 3.3 Stop signals

Stop signal	Description
Operator's panel emergency stop	This item indicates the state of the emergency stop button on the operator's panel. If the EMERGENCY STOP button is pressed, the state is indicated as "TRUE".
Teach pendant emergency stop	This item indicates the state of the emergency stop button on the teach pendant. If the EMERGENCY STOP button is pressed, the state is indicated as "TRUE".
External emergency stop	This item indicates the state of the external emergency stop signal. If the EMERGENCY STOP signal is asserted, the state is indicated as "TRUE".
Fence open	This item indicates the state of the safety fence. If the safety fence is open, the state is indicated as "TRUE".
Enabling device (Deadman switch)	This item indicates whether the enabling device (the deadman switch) on the teach pendant is grasped correctly. If the teach pendant is operable, and the enabling device (the deadman switch) is grasped correctly, the state is indicated as "TRUE". If the enabling device (the deadman switch) is released or is grasped tightly when the teach pendant is operable, an alarm occurs, causing the servo power to be switched off.
Teach pendant operable	This item indicates whether the teach pendant is operable. If the teach pendant is operable, the state is indicated as "TRUE".
Hand broken	This item indicates the state of the hand safety joint. If the hand interferes with a workpiece or anything like this, and the safety joint is opened, the state is indicated as "TRUE". In this case, an alarm occurs, causing the servo power to be switched off.
Robot overtravel	This item indicates whether the current position of the robot is out of the operation range. If any of robot axes goes out of the operation range beyond the overtravel switch, the state is indicated as "TRUE". In this case, an alarm occurs, causing the servo power to be switched off.
Abnormal air pressure	This item indicates the state of the air pressure. The abnormal air pressure signal is connected to the air pressure sensor. If the air pressure is not higher than the specified value, the state is indicated as "TRUE".

Steps to display stop signal screen

(1) Press [MENU] key to display the screen menu.
(2) Select [STATUS] on the next page.
(3) Press F1, [TYPE] to display the screen switching menu.
(4) Select Stop Signal. You will see a screen similar to the following.

```
STATUS Stop Signal
          SIGNAL NAME            STATUS   1/12

       1 SOP E-Stop:              FALSE
       2 TP E-STOP:               FALSE
       3 EXT E-STOP:              FALSE
       4 Fence Open:              FALSE
       5 TP Deadman:              TRUE
       6 TP Enable:               TRUE
       7 Hand Broken:             FALSE
       8 Overtravel:              FALSE
       9 Low Air Alarm:           FALSE
      10 Belt Broken:             FALSE
      11 SVOFF Input:             FALSE
      12 Non Teacher Enb. Dev.:   FALSE

    [ TYPE ]
```

3.4 MASTERING

Mastering is needed if:
(1) The SRVO-062 BZAL or SRVO-038 pulse mismatch alarm occurs, or
(2) The motor is replaced.
Item (1) requires quick mastering, while item (2) requires single axis or fixture position mastering.
The mastering procedure is described below. For details, refer to an applicable maintenance manual of mechanical unit or Mastering chapter in the Appendix B of the OPERATOR'S MANUAL (BASIC OPERATION) (B-83284EN).

Condition

System variable $MASTER_ENB must be set to 1 or 2.

```
SYSTEM Variables

     272 $MASTER_ENB      1
```

Step

As an example, the following describes the procedure for fixture position mastering.
(1) Press [MENU] key to display screen menu.
(2) Press "0" (NEXT) and select [6 SYSTEM].
(3) Press F1 [TYPE] to display screen change menu.
(4) Select [CALIBRATE] and you will see a screen similar to the following.
(5) Move the robot by jog feed to the mastering position. Release the brake control with the manual brake release if necessary.

```
SYSTEM Master/Cal
                                TORQUE = [ON ]
     1 FIXTURE POSITION MASTER
     2 ZERO POSITION MASTER
     3 QUICK MASTER
     4 QUICK MASTER FOR SINGLE AXIS
     5 SINGLE AXIS MASTER
     6 SET QUICK MASTER REF
     7 CALIBRATE

      Press 'ENTER' or number key to select.

   [ TYPE ]  LOAD  RES_PCA          DONE
```

NOTE
Mastering cannot be performed until position of the Pulse coder is established.

(6) Select [1 FIXTURE POSITION MASTER] and press the F4 key [yes]. Mastering data are set.

```
SYSTEM Master/Cal
                                TORQUE = [ON ]
      1 FIXTURE POSITION MASTER
      2 ZERO POSITION MASTER
      3 QUICK MASTER
      4 QUICK MASTER FOR SINGLE AXIS
      5 SINGLE AXIS MASTER
      6 SET QUICK MASTER REF
      7 CALIBRATE
      Robot Mastered! Mastering Data:
        <-3105333> <-13216881> <22995280>
        <-1354153> <0> <0>

  [ TYPE ]  LOAD  RES_PCA          DONE
```

(7) Select [7 CALIBRATE] and press the F4 key [yes]. Calibration is performed.
Alternatively, to perform positioning, turn the power off, and then turn it on again. Calibration is performed whenever the power is turned on.

```
SYSTEM Master/Cal
                                TORQUE = [ON ]
      1 FIXTURE POSITION MASTER
      2 ZERO POSITION MASTER
      3 QUICK MASTER
      4 QUICK MASTER FOR SINGLE AXIS
      5 SINGLE AXIS MASTER
      6 SET QUICK MASTER REF
      7 CALIBRATE
      Robot Calibrated! Cur Jnt Ang(deg):
         <   0.0000> <  24.6528> < -94.2241>
         <   0.0000> < -85.7759> <   0.0000>

  [ TYPE ]  LOAD  RES_PCA          DONE
```

(8) Press F5 [DONE] after mastering.
(9) Restore the brake condition to its original state.

3.5 TROUBLESHOOTING USING THE ALARM CODE

SRVO-001 Operator panel E-stop

(Explanation) The emergency stop button on the operator's panel is pressed.

(Action 1) Release the emergency stop button pressed on the operator's panel.

(Action 2) Check whether the wires connecting between the emergency stop button and the emergency stop board (CRT27) are not disconnected. If a disconnection is found, replace the entire wires.

(Action 3) Check whether the wires connecting the teach pendant to the emergency stop board (CRS36) are not disconnected. If a disconnection is found, replace the entire wires.

(Action 4) With the emergency stop in the released position, check for continuity across the terminals of the switch. If there is a short-circuit on the contact points, the emergency stop button is broken. Replace the emergency stop button or the operator's panel.

(Action 5) Replace the teach pendant.

(Action 6) Replace the emergency stop board.

Before executing the (Action 7), perform a complete controller backup to save all your programs and settings.

(Action 7) Replace the main board.

NOTE

If SRVO-001 is issued together with SRVO-213, a fuse may have blown. Take the same actions as for SRVO-213.

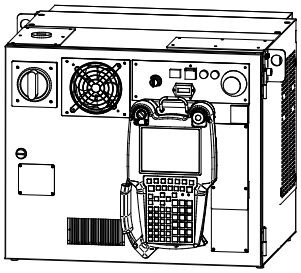

(A-cabinet)

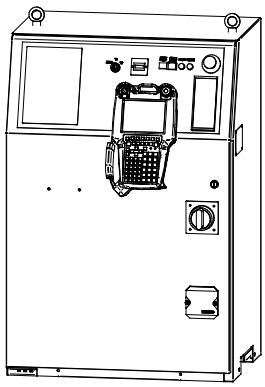

(B-cabinet)

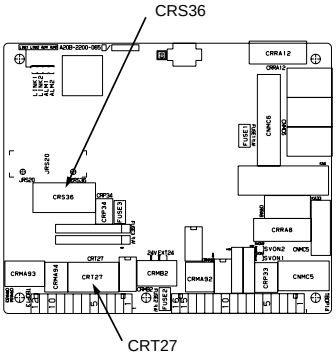

(Emergency stop board/A-cabinet)

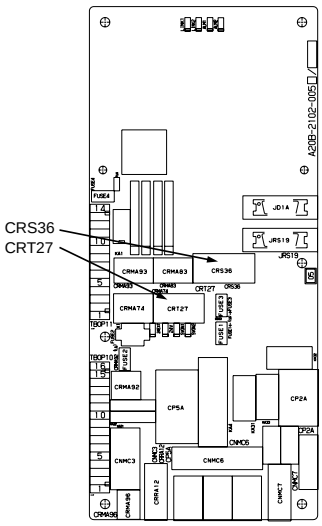

(Emergency stop board/B-cabinet)

Fig.3.5 (a) SRVO-001 Operator panel E-stop

SRVO-002 Teach pendant E-stop

(Explanation) The emergency stop button on the teach pendant is kept pressed.
(Action 1) Release the emergency stop button on the teach pendant.
(Action 2) Replace the teach pendant.

SRVO-003 Enabling device (Deadman switch) released

(Explanation) The teach pendant is enabled, but the enabling device (the deadman switch) is not pressed. Alternatively, the enabling device (the deadman switch) is grasped strongly.
(Action 1) Check the intermediate position of the enabling device (the deadman switch) on the teach pendant.
(Action 2) Check that the mode switch on the operator's panel and the teach pendant ON/OFF switch (the teach pendant enable switch) on the teach pendant are at the correct positions.
(Action 3) Replace the teach pendant.
(Action 4) Check the mode switch connection and operation. If trouble is found, replace the mode switch.
(Action 5) Replace the emergency stop board.

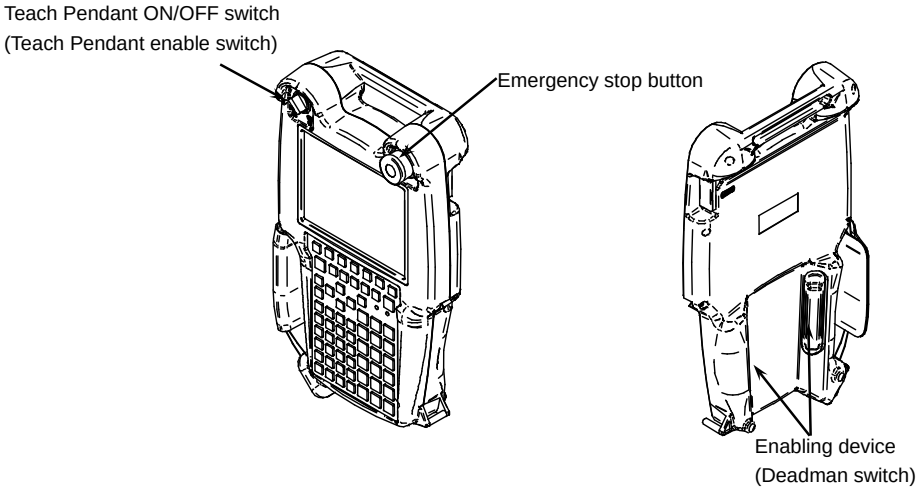

(Teach pendant)

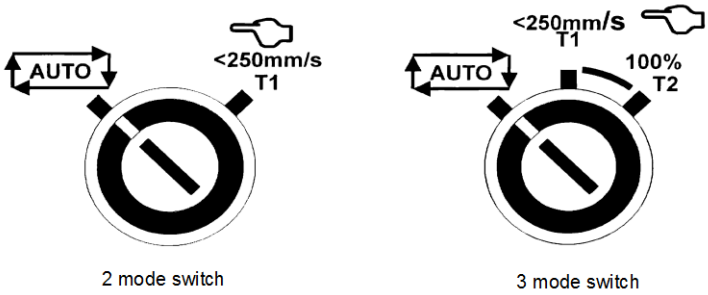

(Mode switch)

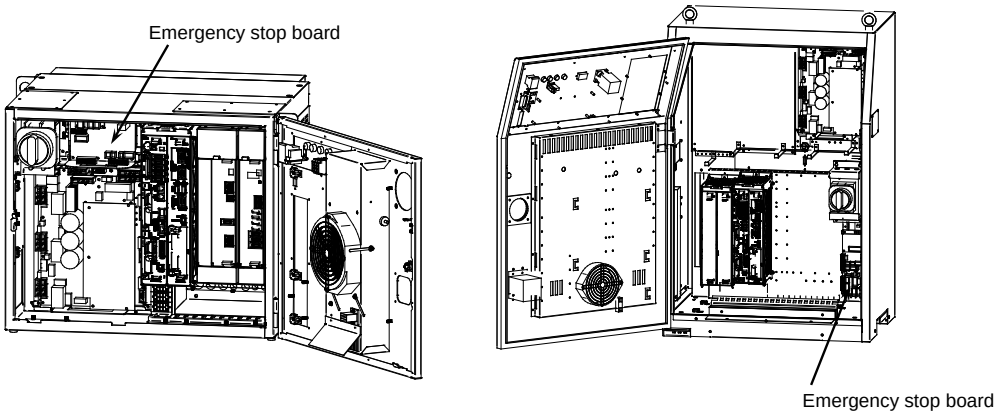

(A-cabinet) **(B-cabinet)**

Fig.3.5 (b) SRVO-002 Teach pendant E-stop / SRVO-003 Enabling device (Deadman switch) released

SRVO-004 Fence open

(Explanation) In the automatic operation mode, the safety fence contact connected to EAS1-EAS11 or EAS2-EAS21 of the terminal block TBOP13(A-cabinet) or TBOP11(B-cabinet) on the emergency stop board is open.

(Action 1) When a safety fence is connected, close the safety fence.

(Action 2) Check the cables and switches connected to EAS1-EAS11 and EAS2-EAS21 of the terminal block TBOP13(A-cabinet) or TBOP11(B-cabinet) on the emergency stop board.

(Action 3) If the safety fence signal is not used, make a connection between EAS1-EAS11 and between EAS2-EAS21 of the terminal block TBOP13(A-cabinet) or TBOP11(B-cabinet) on the emergency stop board.

(Action 4) Check the mode switch. If trouble is found, replace the mode switch.

(Action 5) Replace the emergency stop board.

NOTE

If SRVO-004 is issued together with SRVO-213, a fuse may have blown. Take the same actions as for SRVO-213.

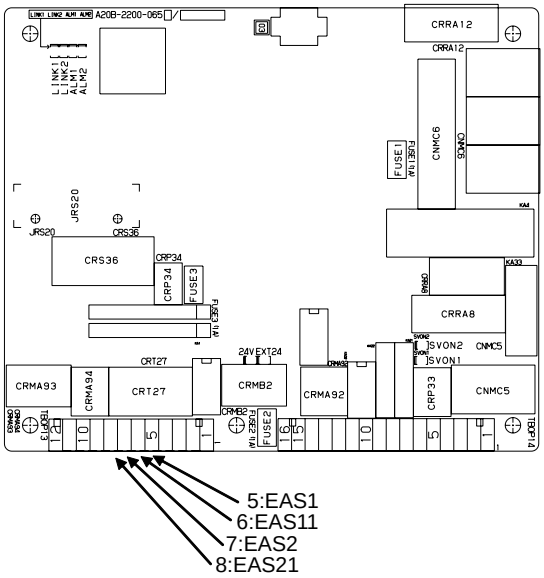

(Emergency stop board/A-cabinet)

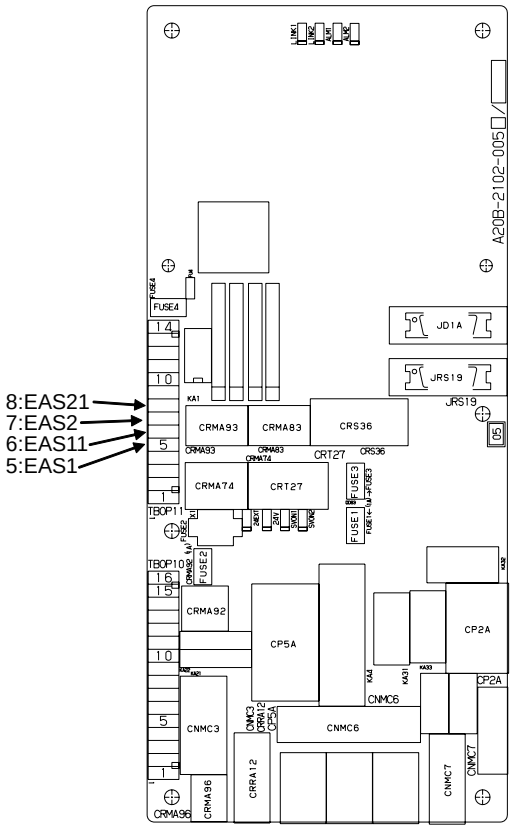

(Emergency stop board/B-cabinet)

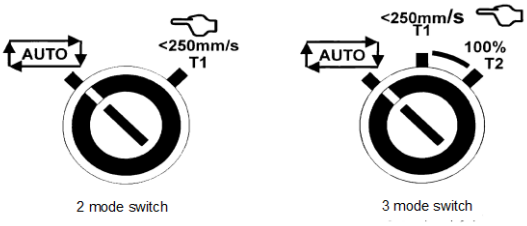

(Mode switch)

Fig.3.5 (c) SRV0-004 Fence open

> ⚠ **WARNING**
> In a system using the safety fence signal, it is very dangerous to disable the signal using a short-circuit when a connection is made between EAS1 and EAS11 and between EAS2 and EAS21. Do not make such an attempt. If a temporary connection with a short-circuit is needed for operation, separate safety measures must be taken.

SRVO-005 Robot overtravel

(Explanation) The robot has moved beyond a hardware limit switch on the axes.

(Action 1)
1) Select [System OT release], and on the overtravel release screen, release each robot axis from the overtravel state.
2) Hold down the shift key, and press the alarm release button to reset the alarm condition.
3) While holding down the shift key, and jog the overtravel axes to the movable range.

(Action 2) Replace the limit switch.

(Action 3) Check the FS2 fuse on the 6-axis servo amplifier. If the SRVO-214 fuse blown alarm is also generated, the fuse (FS2) has blown. Eliminate the cause of fuse melting, and replace the fuse.

(Action 4) Check the EE connector.

(Action 5) Replace the 6-axis servo amplifier.

(Action 6) Verify the following for connector RP1 at the base of the robot:
1) There are no bent or dislocated pins in the male or female connectors.
2) The connector is securely connected.

Then verify that connectors CRF8 and CRM68 on the 6-axis servo amplifier are securely connected. Also, verify that the robot connection cable (RP1) is in good condition, and there are no cuts or kinks visible. Check the internal cable of the robot for a short circuit or connection to ground.

> **NOTE**
> It is factory-placed in the overtravel state for packing purposes.
> If the Overtravel signal is not in use, it may have been disabled by short-circuiting in the mechanical unit.

SRVO-006 Hand broken

(Explanation) The safety joint (if in use) might have been broken. Alternatively, the HBK signal on the robot connection cable might be a ground fault or a cable disconnection.

(Action 1) Hold down the shift key, and press the alarm release button to reset the alarm condition. While holding down the shift key, jog the tool to the work area.
1) Replace the hand broken device.
2) Check the hand broken cable.

(Action 2) Replace the 6-axis servo amplifier.

(Action 3) Verify the following for connector RP1 at the base of the robot:
1) There are no bent or dislocated pins in the male or female connector.
2) The connector is securely connected.

Then verify that connectors CRF8 and CRM68 on the 6-axis servo amplifier are securely connected. Also, verify that the robot connection cable (RP1) is in good condition, and there are no cuts or kinks visible. Check the internal cable of the robot for a short circuit or connection to ground.

> **NOTE**
> If the Hand broken signal is not in use, it can be disabled by software setting.
> Refer to Subsection 5.5.3 in CONNECTIONS to disable the Hand broken signal.

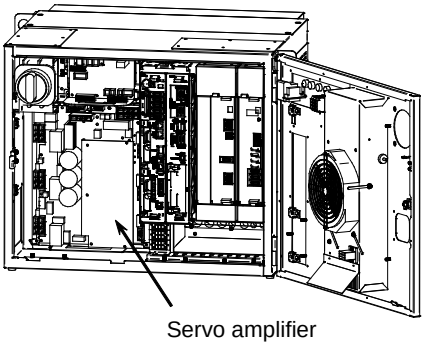

(A-cabinet)

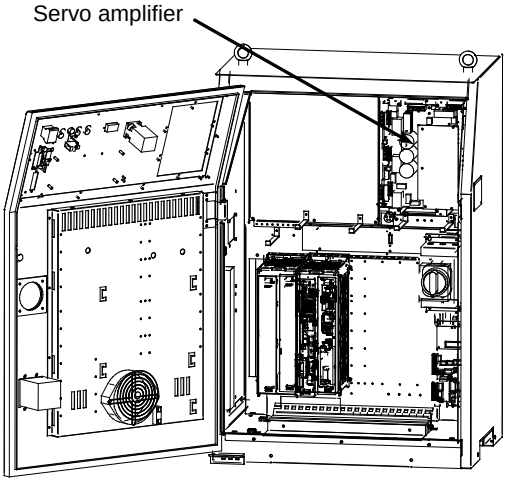

(B-cabinet)

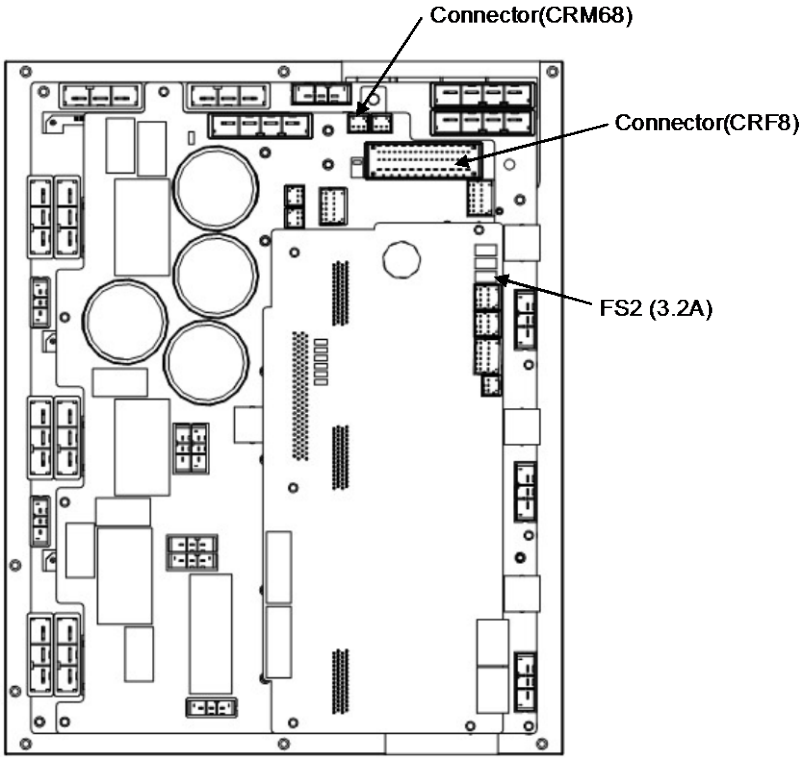

(Servo amplifier)

Fig.3.5 (d) SRVO-005 Robot overtravel
SRVO-006 Hand broken

SRVO-007 External emergency stops

(Explanation) The contact of external emergency stop connected between EES1-EES11, EES2-EES21 of the terminal block TBOP13(A-cabinet) or TBOP11(B-cabinet) on the emergency stop board is open.

(Action 1) If an external emergency stop switch is connected, release the switch.

(Action 2) Check the switch and cable connected between EES1-EES11, EES2-EES21 of the terminal block TBOP13(A-cabinet) or TBOP11(B-cabinet) on the emergency stop board.

(Action 3) When this signal is not used, make a short-circuit between EES1-EES11, EES2-EES21 of the terminal block TBOP13(A-cabinet) or TBOP11(B-cabinet) on the emergency stop board .

(Action 4) Replace the emergency stop board.

NOTE

If SRVO-007 is issued together with SRVO-213, a fuse may have blown. Take the same actions as for SRVO-213.

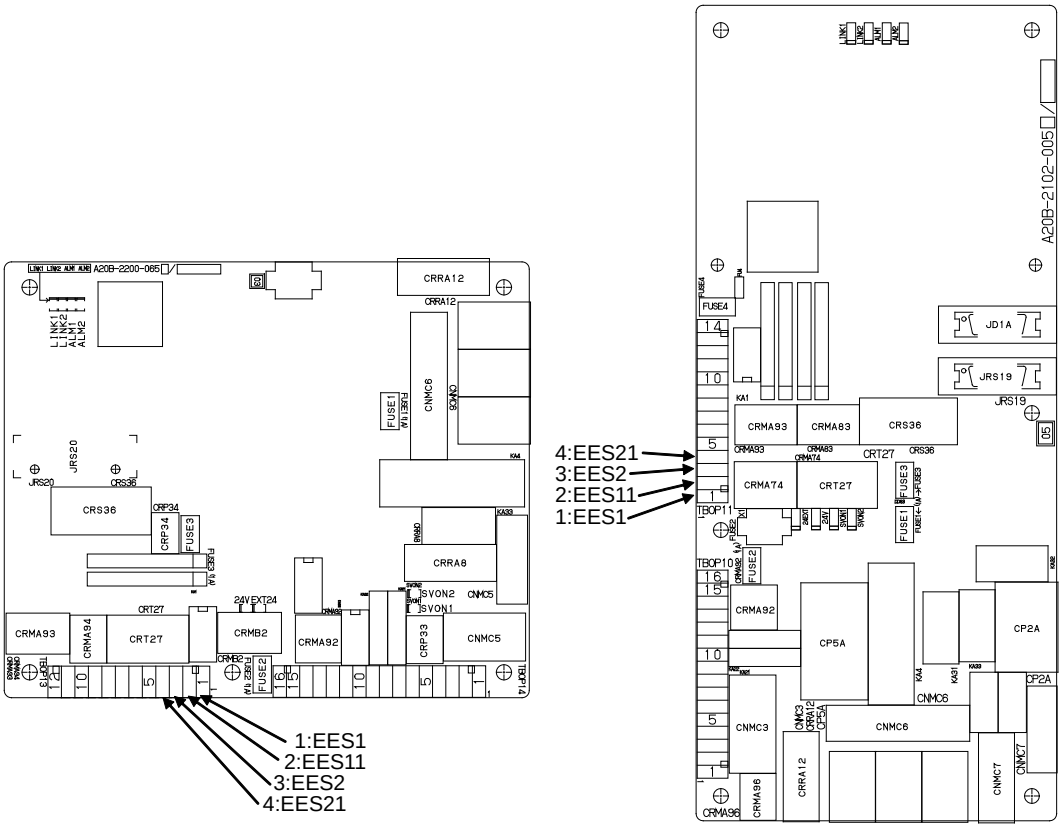

(Emergency stop board/A-cabinet) **(Emergency stop board/B-cabinet)**

Fig.3.5 (e) SRVO-007 External-emergency stops

⚠ WARNING

In a system using the external emergency stop signal using a short-circuit, it is very dangerous to disable the signal when a connection is made between EES1 and EES11 and between EES2 and EES21. Never make such an attempt. If a temporary connection with a short-circuit is needed for operation, separate safety measures must be taken.

SRVO-009 Pneumatic pressure alarm

(Explanation) Abnormal air pressure was detected. The input signal is located on the EE interface of the robot. Refer to the manual of your robot model.

(Action 1) If an abnormal air pressure is detected, check the cause.

(Action 2) Check the EE connector.

(Action 3) Check the robot connection cable (RP1) and the mechanical unit cable of the robot for a ground fault or a cable disconnection. If a fault or a disconnection is detected, replace the cable.

(Action 4) Replace the 6-axis servo amplifier.

(Action 5) Replace the internal cables of the robot.

NOTE

Pneumatic pressure alarm input signal is on the EE interface of robot. Please refer to the manual of your robot.

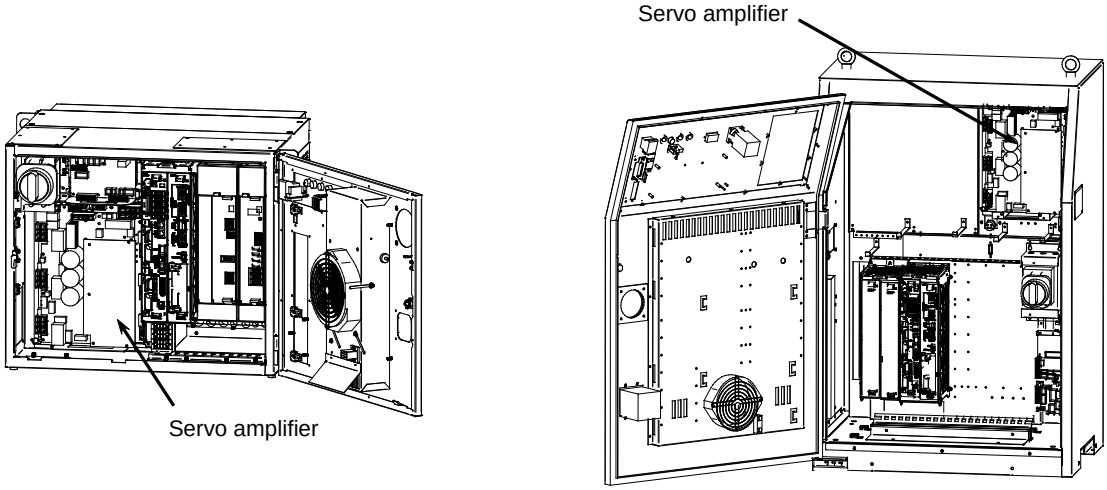

(A-cabinet) **(B-cabinet)**

Fig.3.5 (f) SRVO-009 Pneumatic pressure alarm

SRVO-014 Fan motor abnormal (n), CPU STOP

(Explanation) When a fan motor stops on the backplane, the TP shows the following message. One minute from the occurrence of the alarm, the robot stops and cannot be operated from the TP. The robot can be recovered by replacing the faulty fan motor. The number in the bracket indicates which fan is abnormal.
(1): Fan above the slot1
(2): Fan above slot2
(3): Both fans

(Action 1) Check the fan motor and its cables of backplane. Replace them if necessary.

(Action 2) Replace the backplane.
Before executing the (Action 3), perform a complete controller backup to save all your programs and settings.

(Action 3) Replace the main board.

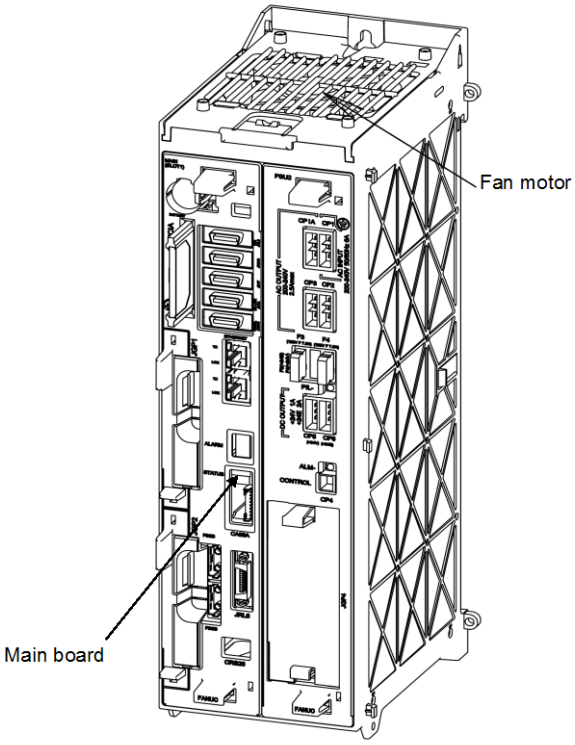

Fig.3.5 (g) SRVO-014 Fan motor abnormal (n), CPU STOP

SRVO-015 System overheat

(Explanation) The temperature in the controller exceeds the specified value. In one minutes from occurring of alarm, robot stops and cannot be operated from TP.

(Action 1) If the ambient temperature is higher than specified (45°C), cool down the ambient temperature by air conditioner and so on.

(Action 2) If the fan motor is not running, check the fan, the fan unit, and the cable connected with the fan motor. Replace them if necessary.

Before executing the (Action 3), perform a complete controller backup to save all your programs and settings.

(Action 3) Replace the main board. (The thermostat on the main board may be faulty.)

NOTE
The controller will stop operation after 1 minute of this alarm.

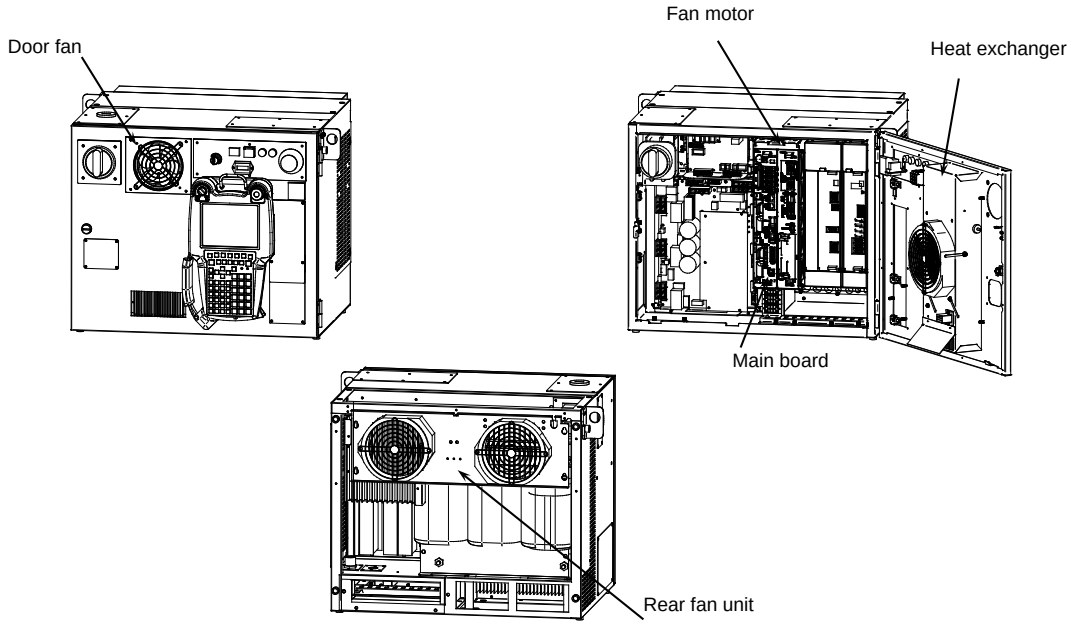

(A-cabinet)

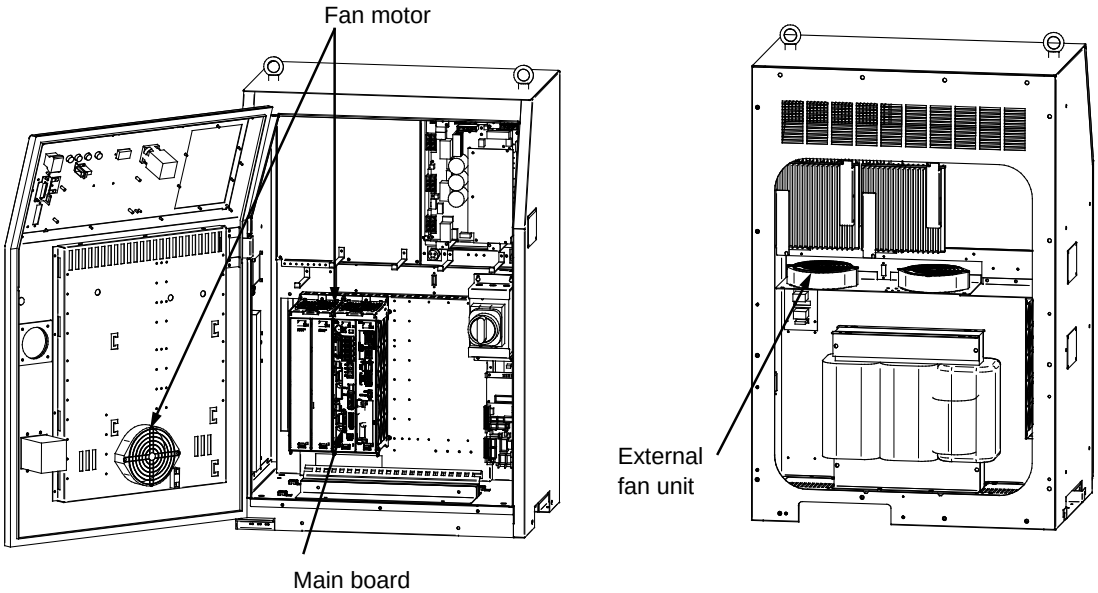

(B-cabinet)

Fig.3.5 (h) SRVO-015 System overheat

SRVO-018 Brake abnormal (Group: i Axis: j)

(Explanation) An excessive brake current is detected. The LED (SVALM) on the 6-axis servo amplifier is lit.

(Action 1) Check the robot connection cables (RM1, RMP), the internal cable of the robot and motor brakes connected to CRR88 connector on the 6-axis servo amplifier. If a short-circuit or grounding fault is found, replace the failed part.

(Action 2) Check the cables and motor brakes connected to CRR65A and CRR65B connector on the 6-axis servo amplifier. If a short-circuit or grounding fault is found, replace the failed part.

(Action 3) Replace the 6-axis servo amplifier.

> ⚠ **CAUTION**
> This error can be caused by the optional brake release unit if the on/off switch is left in on position while the operator attempts to jog the robot. For recovery, turn the brake release unit off and cycle the controller power.

SRVO-021 SRDY off (Group: i Axis: j)

(Explanation) The HRDY is on and the SRDY is off, although there is no other cause of an alarm. (HRDY is a signal with which the host detects the servo system whether to turn on or off the servo amplifier magnetic contactor. SRDY is a signal with which the servo system informs the host whether the magnetic contactor is turned on.)
If the servo amplifier magnetic contactor cannot be turned on when directed so, it is most likely that a servo amplifier alarm has occurred. If a servo amplifier alarm has been detected, the host will not issue this alarm (SRDY off). Therefore, this alarm indicates that the magnetic contactor cannot be turned on for an unknown reason.

(Action 1) Make sure that the emergency stop board connectors CRRA8(A-cabinet) or CP2A(B-cabinet), CRMA92, CNMC5(A-cabinet) or CNMC7(B-cabinet), and CRMA91(6-axis amplifier) are securely attached to the servo amplifier.
In case of using aux. axis amplifier, make sure that the connector CXA2A (6-axis amplifier) or CXA2B (aux. axis amplifier) is securely attached to the servo amplifier.

(Action 2) It is possible that a momentary power loss occurs due to an intermittent connection. Check related cables.

(Action 3) Replace the E-stop unit.

(Action 4) Replace the servo amplifier.

In case of Auxiliary Axis Option

<Case 1> If this alarm occurs on the 6ch-amplifier and the auxiliary axis servo amplifiers at the same time,

(Action 1) It is likely that the supply voltage stops instantaneously. Check the power supply.

(Action 2) Replace the E-stop unit.

(Action 3) Replace the 6ch-amplifier.

<Case 2> If this alarm occurs with other alarms,

(Action 1) In case other alarms occur at the same time in the alarm history, check the troubleshooting of other alarms.

(Action 2) In case with “SRVO-214 Fuse Blown (Amp)”, see the maintenance manual of R-30iB controller.

(Action 3) In case with “SRVO-222 Lack of Amp (Amp:i)”, see the troubleshooting of SRVO-222.

<Case 3> If this alarm occurs on only the auxiliary axis servo amplifiers,

(Action 1) Replace the auxiliary axis servo amplifier that is indicated by the alarm massage.

(Action 2) Replace the 6ch-amplifier.

<NOTE> A SRDY off may occur when the software setting is incorrect.

<1> If the parameter of the auxiliary axis is wrong, SRDY off occurs.

<2> If the machine lock is set to the 6ch-amplifier, SRDY off occurs on the auxiliary axis

that is subordinate to the 6ch-amplifier.

<3> If the machine lock is set to one axis of the 2-axis and 3-axis servo amplifier, SRDY off occurs on the other auxiliary axis.

SRVO-022 SRDY on (Group: i Axis: j)

(Explanation) When the HRDY is about to be turned on, the SRDY is already on. (HRDY is a signal with which the host directs the servo system whether to turn on or off the servo amplifier magnetic contactor. SRDY is a signal with which the servo system informs the host whether the magnetic contactor is turned on.)

(Action 1) Replace the servo amplifier with the alarm message.

In case of Auxiliary Axis Option

(Action 1) Replace the servo card or the auxiliary axis board indicated by the alarm message.

(Action 2) Replace the servo amplifier that is indicated by the alarm massage.

SRVO-023 Stop error excess (G:i A:j)

(Explanation) The position error is abnormally large when the servo stops.
Check whether the brake is released through the clack sound of the brake or vibration.

In case the brake is not released.

(Action 1) If the brake is not released, check the continuity of the brake line in the robot connection cable and the mechanical unit cable.

(Action 2) If a cable disconnection is not found, replace the 6-axis servo amplifier or the servo motor.

In case the brake is released.

(Action 1) Check whether an obstacle inhibits robot or the corresponding auxiliary axis motion.

(Action 2) Make sure that connectors CNJ1A-CNJ6 are securely attached to the 6-axis servo amplifier.

(Action 3) Check the continuity of the robot connection cable and the internal robot power cable.

(Action 4) Check to see if the payload is greater than the rating. If greater, reduce it to the rated level. (If the load is too great, the torque required for acceleration / deceleration becomes higher than the capacity of the motor. As a result, when the overloaded motion is performed, the motor becomes unable to follow the command signal, and an alarm may be issued.)

(Action 5) Check that the input voltage to the controller is within the rated voltage and no phase is missing. And check that the setting of the transformer is correct. Check each phase of the voltage feeding the CRR38A or CRR38B connector of the three-phase power (200 VAC) input to the 6-axis servo amplifier. If it is 210 VAC or lower, check the line voltage. (If the voltage input to the servo amplifier becomes low, the torque output also becomes low. As a result, the motor may become unable to follow the command, hence possibly causing this alarm.)

(Action 6) Replace the servo amplifier.

(Action 7) Replace the motor of the alarm axis.

In case of Auxiliary Axis Option

(Action 1) Check whether the robot or the auxiliary axis has collided with anything.

(Action 2) Check whether the motor brake has been released.

<1> Check the continuity of the brake circuit (cable, coil) at the CRR65*.

<2> Make sure that the brake cable has no ground fault.

<3> In case the brake unit is mounted, check to see if the fuse (FU2) of the brake unit is blown.(If this fuse is blown, it may be caused by some defect of the brake cable.)

(Action 3) Make sure that CZ2 connector at the servo amplifier and the power connector at the motor are connected tightly and check the continuity of the servo power circuit at CZ2.

(Action 4) Check to see if the load is greater than the rating. If greater, reduce it to within the rating. (If the load is too great, the torque required for acceleration / deceleration becomes higher than the capacity of the motor. As a result, the motor becomes unable to follow the command, and an alarm is issued.

(Action 5) Check to see if the input voltage of the controller is within its rated voltage and the voltage setting of the transformer is right. (If the voltage input to the servo amplifier becomes low, the torque output also becomes low. As a result the motor may become unable to follow the command, hence possibly an alarm.)

(Action 6) Replace the servo amplifier indicated by the alarm message.

(Action 7) Replace the brake unit.

(Action 8) Replace the motor.

NOTE
Incorrect setting of the brake number causes this alarm.

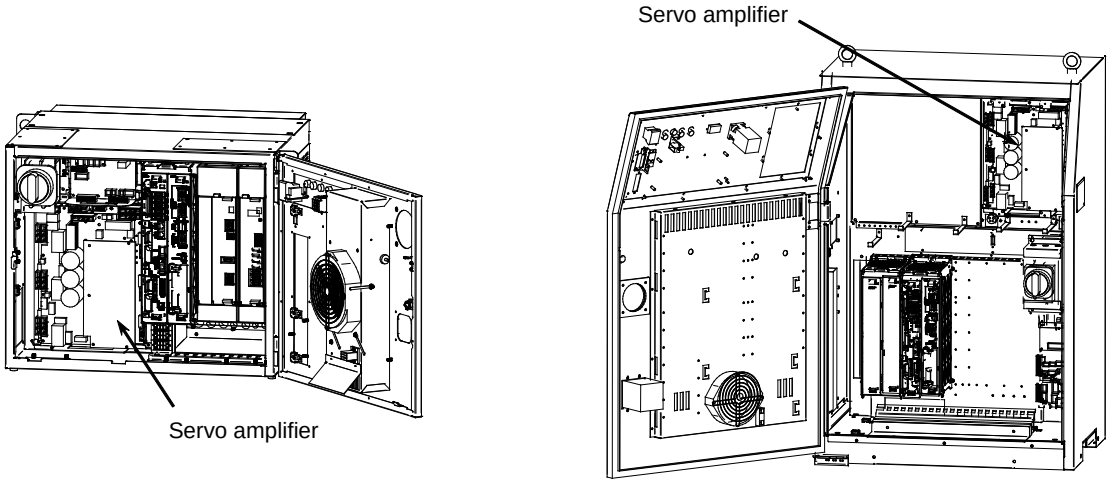

(A-cabinet) **(B-cabinet)**

Fig.3.5 (i) SRVO-018 Brake abnormal
SRVO-021 SRDY off
SRVO-022 SRDY on
SRVO-023 Stop error excess

SRVO-024 Move error excess (G:i A:j)

(Explanation) When the robot is running, its position error is greater than a specified value ($PARAM _ GROUP. $MOVER _ OFFST). It is likely that the robot cannot follow the speed specified by program.

(Action 1) Take the same actions as SRVO-023.

SRVO-027 Robot not mastered (Group: i)

(Explanation) An attempt was made to calibrate the robot, but the necessary mastering has not been completed.

(Action) Check whether the mastering is valid. If the mastering is invalid, master the robot.

> ⚠ **WARNING**
> If the position data are incorrect, the robot or additional axis can operate abnormally, set the position data correctly. Otherwise, you could injure personnel or damage equipment.

SRVO-030 Brake on hold (Group: i)

(Explanation) If the temporary halt alarm function is enabled ($SCR.$BRKHOLD ENB=1), SRVO-030 is issued when a temporary halt occurs. When this function is not used, disable the setting.

(Action) Disable [Servo-off in temporary halt] on the general item setting screen [6 General Setting Items].

SRVO-033 Robot not calibrated (Group: i)

(Explanation) An attempt was made to set up a reference point for quick mastering, but the robot had not been calibrated.

(Action) Calibrate the robot.

1. Supply power.
2. Set up a quick mastering reference point using [Positioning] on the SYSTEM Master/Cal menu.

SRVO-034 Ref pos not set (Group: i)

(Explanation) An attempt was made to perform quick mastering, but the reference point has not been set up.

(Action) Set up a quick mastering reference point on the SYSTEM Master/Cal menu.

SRVO-036 Inpos time over (G:i A:j)

(Explanation) The robot did not get to the effective area ($PARAM _ GROUP.$ STOPTOL) even after the position check monitoring time ($PARAM _ GROUP. $INPOS _ TIME) elapsed.

(Action) Take the same actions as for SRVO-023 (large position error at a stop).

SRVO-037 IMSTP input (Group: i)

(Explanation) The *IMSTP signal for a peripheral device interface was input.

(Action) Turn on the *IMSTP signal.

SRVO-038 Pulse mismatch (Group: i Axis: j)

(Explanation) The pulse count obtained when power is turned off does not match the pulse count obtained when power is applied. This alarm is asserted after replacing the motor, or after replacing the battery used to backup Pulsecoder data, or after loading back up data to the Main Board.

Check the alarm history.

(Action 1) If the brake number is set to non-brake motors, this alarm may occur. Check the software setting of the brake number.

(Action 2) In case the robot has been moved by using the brake release unit while the power is off or when restoring the backup data to the main board, this alarm may occur. Remaster the robot.

(Action 3) If the robot moved because the brake failed, this alarm may occur. Confirm the setup or brake type setting and correct setting.

(Action 4) Replace the motor and master the robot.

In case of Auxiliary Axis Option

(Action 1) In case with "SRVO-222 Lack of Amp (Amp:i)", see the troubleshooting of SRVO-222.

(Action 2) If the brake number is set to the non-brake motors, this alarm may occur. Check the software setting of the brake number.

(Action 3) In case the robot or the auxiliary axis motors have been moved using the brake release unit while the power is off or when restoring the back-up data to the main board, this alarm may occur. Remaster the robot and the auxiliary axis motors.

(Action 4) If the robot or the auxiliary axis motors have been moved because the brake failed, this alarm may occur. Remove the factors and remaster the robot and the auxiliary axis motors.

(Action 5) Replace the motor and remaster the group axis that is indicated by the alarm message.

SRVO-043 DCAL alarm (Group: i Axis: j)

(Explanation) The regenerative discharge energy was too high to be dissipated as heat. (To run the robot, the servo amplifier supplies energy to the robot. When going down the vertical axis, the robot operates from the potential energy. If a reduction in the potential energy is higher than the energy needed for acceleration, the servo amplifier receives energy from the motor. A similar phenomenon occurs even when no gravity is applied, for example, at deceleration on a horizontal axis. The energy that the servo amplifier receives from the motor is called the regenerative energy. The servo amplifier dissipates this energy as heat. If the regenerative energy is higher than the energy dissipated as heat, the difference is stored in the servo amplifier, causing an alarm.)

(Action 1) This alarm may occur if the axis is subjected to frequent acceleration/deceleration or if the axis is vertical and generates a large amount of regenerative energy.
If this alarm has occurred, relax the service conditions.

(Action 2) Check fuse FS3 in the 6-axis servo amplifier. If it has blown, remove the cause, and replace the fuse. One of the probable causes of a blown fuse is a ground fault in the servo amplifier for the auxiliary axis.

(Action 3) The ambient temperature is excessively high. Or the discharge resistor can't be cooled effectively. Check the external fan unit, and replace it if it stops. Clean up the fun unit, the discharge resistor and the louver if they are dirty.

(Action 4) Make sure that the 6-axis servo amplifier CRR63A and CRR63B connectors are connected tightly. Then detach the cables from CRR63A and CRR63B connectors on the servo amplifier, and check for continuity between pins 1 and 2 of the cable-end connector. If there is no continuity between the pins, replace the discharge resistor.

(Action 5) Make sure that the 6-axis servo amplifier CRRA11A and CRRA11B are connected tightly, then detach the cables from CRRA11A and CRRA11B on the servo amplifier and check the resistance between pins 1 and 3 of each cable end connector. If the resistance is not 6.5Ω, replace the discharge resistor. CRRA11B may not be used depending on the robot model.

(Action 6) Replace the 6-axis servo amplifier.

(Action 7) This alarm may occur because of an incorrect transformer tap setting based on the actual input voltage. Measure the input voltage between each phase at the main breaker and make sure that each voltage satisfies the input voltage rating. If each voltage does not satisfy the input voltage rating, check the power supply facility.

SRVO-044 DCHVAL%s alarm (G:i A:j)

(Explanation) The DC voltage (DC link voltage) of the main circuit power supply is abnormally high.

(Action 1) Check that the input voltage to the controller is within the rated voltage. And check that the setting of the transformer is correct.

(Action 2) Check the three-phase input voltage at the 6-axis servo amplifier. If it is 240 VAC or higher, check the line voltage. (If the three-phase input voltage is higher than 240 VAC, high acceleration/deceleration can cause in this alarm.)

(Action 3) Check that the load weight is within the rating. If it is higher than the rating, reduce it to the rated level. (If the machine load is higher than the rating, the accumulation of regenerative energy might result in the HVAL alarm even when the three-phase input voltage is within the rating.)

(Action 4) Make sure that the 6-axis servo amplifier CRRA11A and CRRA11B are connected tightly, then detach the cables from CRRA11A and CRRA11B on the servo amplifier and check the resistance between pins 1 and 3 of each cable end connector. If the resistance is not 6.5Ω, replace the discharge resistor. CRRA11B may not be used depending on the robot model.

(Action 5) Replace the 6-axis servo amplifier.

(Action 6) Replace the Power Supply(α*i*PS).

SRVO-045 HCAL alarm (Group: i Axis: j)

(Explanation) Abnormally high current was detected in the main circuit of the servo amplifier.

(Action 1) Turn off the power, and disconnect the power cable from the 6-axis servo amplifier indicated by the alarm message. (And disconnect the brake cable (CRR88 on the 6-axis servo amplifier) to avoid the axis falling unexpectedly.) Supply power and see if the alarm occurs again. If the alarm occurs again, replace the servo amplifier.

(Action 2) Turn off the power and disconnect the power cable from the servo amplifier indicated by the alarm message, and check the insulation by measuring between U, V, or W and the GND line. If there is a short-circuit, replace the power cable.

(Action 3) Turn off the power and disconnect the power cable from the servo amplifier by the alarm message, and measure the resistance between their U and V, V and W and W and U with an ohmmeter that has a very low resistance range. If the resistances at the three places are different from each other, either the motor or the power cable is defective. Check each item in detail and replace it if necessary.

SRVO-046 OVC alarm (Group: i Axis: j)

(Explanation) This alarm is issued to prevent the motor from sustaining thermal damage that might occur when the root mean square current, calculated within the servo system, is out of the allowable range.

(Action 1) Check the operating condition for the robot and relax the service condition if possible. If the load or operating condition has exceeded the rating, reduce the load or relax the operating condition to meet the rating.

(Action 2) Check whether the voltage input to the controller is within the rated voltage and also check whether the voltage set for the transformer of the controller is correct.

(Action 3) Check whether the brake of the corresponding axis is released.

(Action 4) Check whether there is a factor that has increased the mechanical load on the corresponding axis.

(Action 5) Replace the servo amplifier.

(Action 6) Replace the motor of the corresponding axis.

(Action 7) Replace the E-stop unit

(Action 8) Replace the motor power line (robot connection cable) of the corresponding axis.

(Action 9) Replace the motor power line and brake line (internal cable of the robot) of the corresponding axis.

In case of Auxiliary Axis Option

(Action 1) Check the operating conditions for the motor and relax the service conditions if it is possible.

(Action 2) Take the same actions as for SRVO-023.

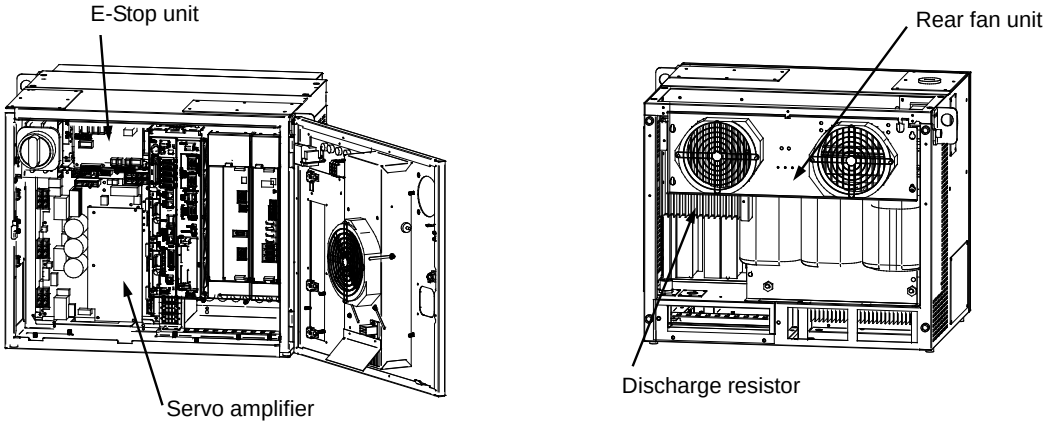

(A-cabinet)

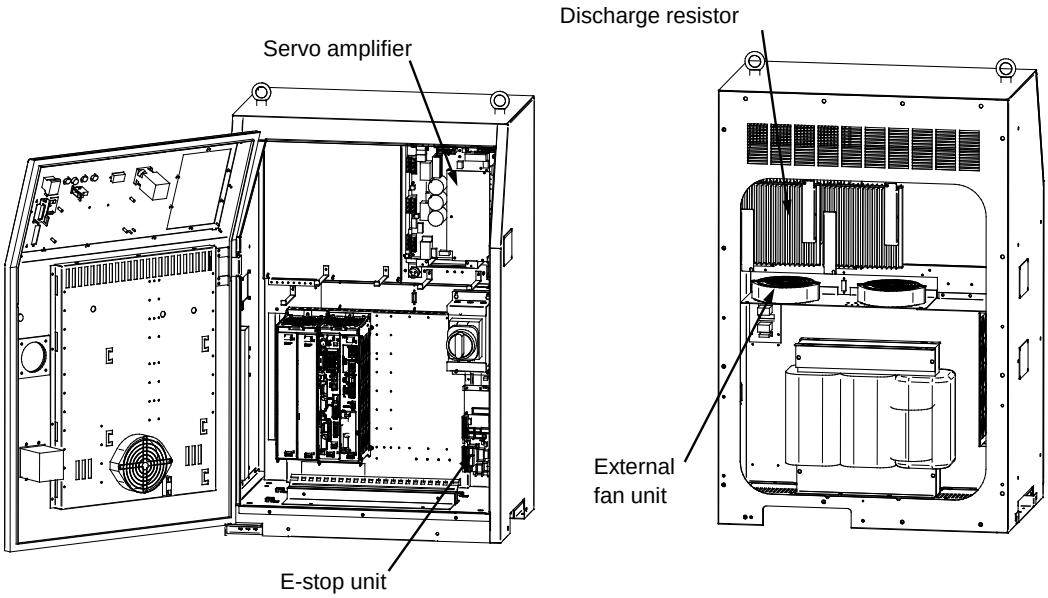

(B-cabinet)

Fig.3.5 (j) SRVO-043 DCAL alarm / SRVO-044 DCHVAL alarm
SRVO-045 HCAL alarm / SRVO-046 OVC alarm

Reference

Relationships among the OVC, OHAL, and HC alarms

- Overview

This section points out the differences among the OVC, OHAL, and HC alarms and describes the purpose of each alarm.

- Alarm detection section

Abbreviation	Designation	Detection section
OVC	Overcurrent alarm	Servo software
OHAL	Overheat alarm	Thermal relay in the motor Thermal relay in the servo amplifier Thermal relay in the separate regenerative resister
HC	High current alarm	Servo amplifier

- Purpose of each alarm

1) HC alarm (high current alarm)
   If high current flows in a power transistor momentarily due to abnormality or noise in the control circuit, the power transistor and rectifier diodes might be damaged, or the magnet of the motor might be degaussed. The HC alarm is intended to prevent such failures.
2) OVC and OHAL alarms (overcurrent and overheat alarms)
   The OVC and OHAL alarms are intended to prevent overheat that may lead to the burnout of the motor winding, the breakdown of the servo amplifier transistor, and the burnout of the separate discharge resistor.
   The OHAL alarm occurs when each built-in thermal relay detects a temperature higher than the rated value. However, this method does not perfectly prevent these failures. For example, if the motor frequently starts and stops, the thermal time constant of the motor, which has a large mass, becomes higher than the time constant of the thermal relay, because these two components are different in material, structure, and dimension. Therefore, if the motor continues to start and stop in a short time as shown in Fig. 3.5 (k), the temperature rise in the motor is steeper than that in the thermal relay, thus causing the motor to burn even though the thermal relay is not in operation mode.

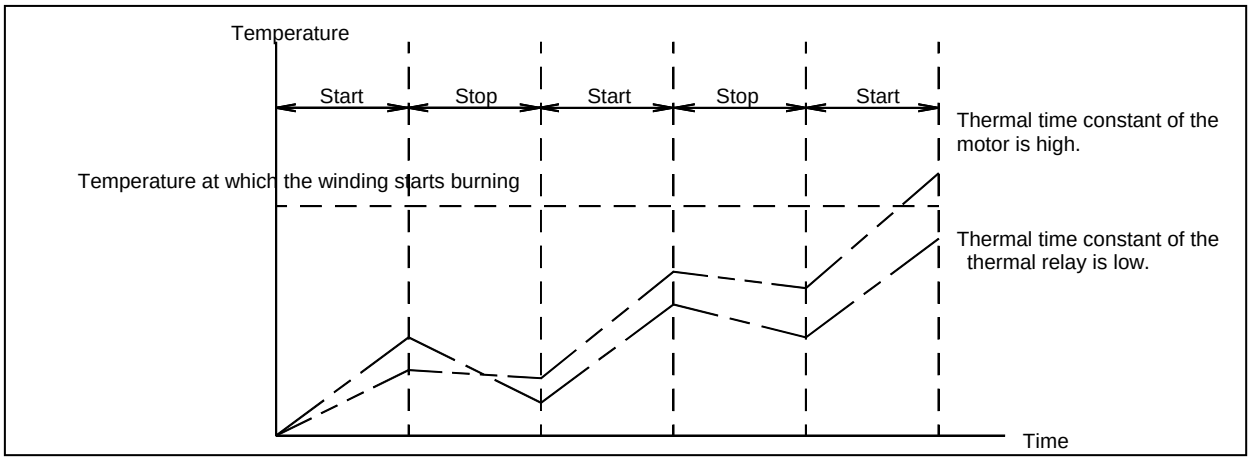

Fig.3.5 (k) Relationship management between the temperatures of the motor and thermal relay on start/stop cycles

To prevent the above defects, software is used to monitor the current in the motor constantly in order to estimate the temperature of the motor. The OVC alarm is issued based on this estimated temperature. This method estimates the motor temperature with substantial accuracy, so it can prevent the failures described above.

To sum up, a double protection method is used; the OVC alarm is used for protection from a short-time overcurrent, and the OHAL alarm is used for protection from long-term overload. The relationship between the OVC and OHAL alarms is shown in Fig.3.5 (l).

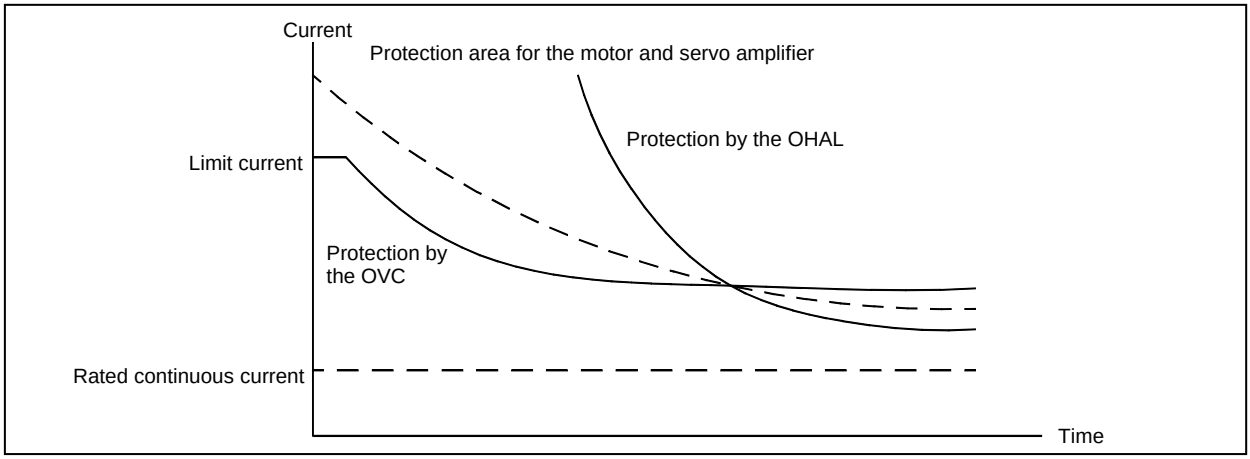

Fig.3.5 (l) Relationship between the OVC and OHAL alarms

> **NOTE**
> The relationship shown in Fig.3.5 (l) is taken into consideration for the OVC alarm. The motor might not be hot even if the OVC alarm has occurred. In this case, do not change the parameters to relax protection.

SRVO-047 LVAL alarm (Group: i Axis: j)

(Explanation) The control power supply voltage (+5 V, etc.) supplied from the power supply circuit in the servo amplifier is abnormally low.

(Action 1) Replace the servo amplifier.

(Action 2) Replace the power supply unit.

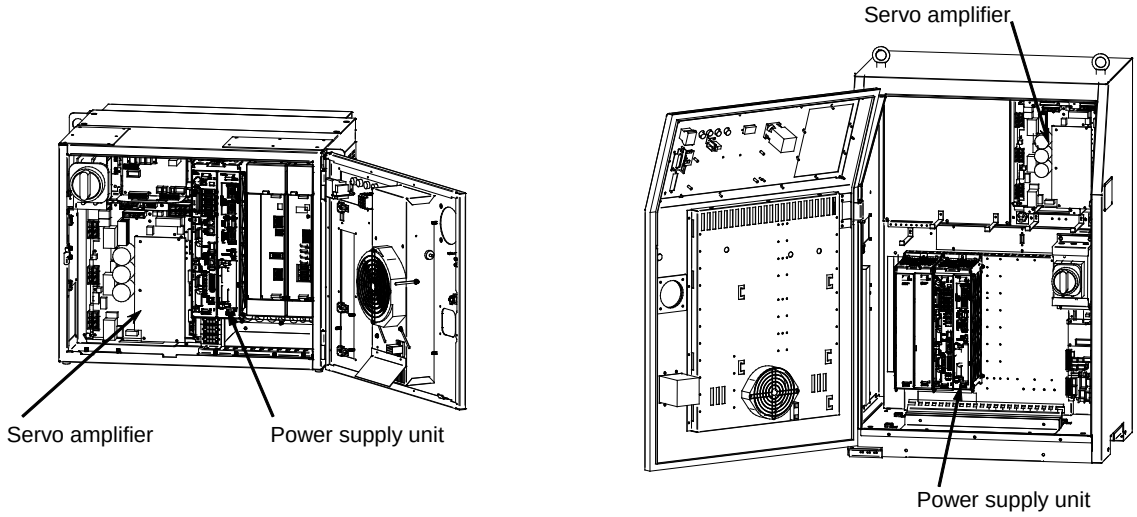

(A-cabinet) **(B-cabinet)**

Fig.3.5 (m) SRVO-047 LVAL alarm

SRVO-049 OHAL1 alarm (G: i A: j)

(Explanation) The thermostat in the transformer activated.

(Action 1) Check whether the fan is stopped and whether the vent is clogged. If necessary, clean or replace them.
(Action 2) If SRVO-049 is issued when the robot operating condition is severe, check the robot operating condition then relax the condition when possible.
(Action 3) Check that a connection is made between the transformer connector CPOH and the servo amplifier CRMA91.
(Action 4) Check whether no phase occurs.
(Action 5) Replace the E-stop unit.
(Action 6) Replace the servo amplifier.
(Action 7) Replace the transformer.

SRVO-050 Collision Detect alarm (Grp:i Ax:j)

(Explanation) The disturbance torque estimated by the servo software is abnormally high. (A collision has been detected.)

(Action 1) Check whether the robot has collided and whether there is a factor that has increased the mechanical load on the corresponding axis.
(Action 2) Check whether the load settings are valid.
(Action 3) Check whether the brake of the corresponding axis is released.
(Action 4) If the load weight exceeds the rated range, decrease it to the rated level.
(Action 5) Check whether the voltage input to the controller is within the rated voltage and also check whether the voltage set for the transformer of the controller is correct.
(Action 6) Replace the servo amplifier.
(Action 7) Replace the motor of the corresponding axis.
(Action 8) Replace the E-stop unit.
(Action 9) Replace the motor power line (robot connection cable) of the corresponding axis.
(Action 10) Replace the motor power line and brake line (internal cable of the robot) of the corresponding axis.

In case of Auxiliary Axis Option
(Action 1) Check the software setting for this option.
(Action 2) Take the same actions as for SRVO-023.

SRVO-051 CUER alarm (Group: i Axis: j)

(Explanation) The offset of the current feedback value is abnormally high.
(Action) Replace the servo amplifier.

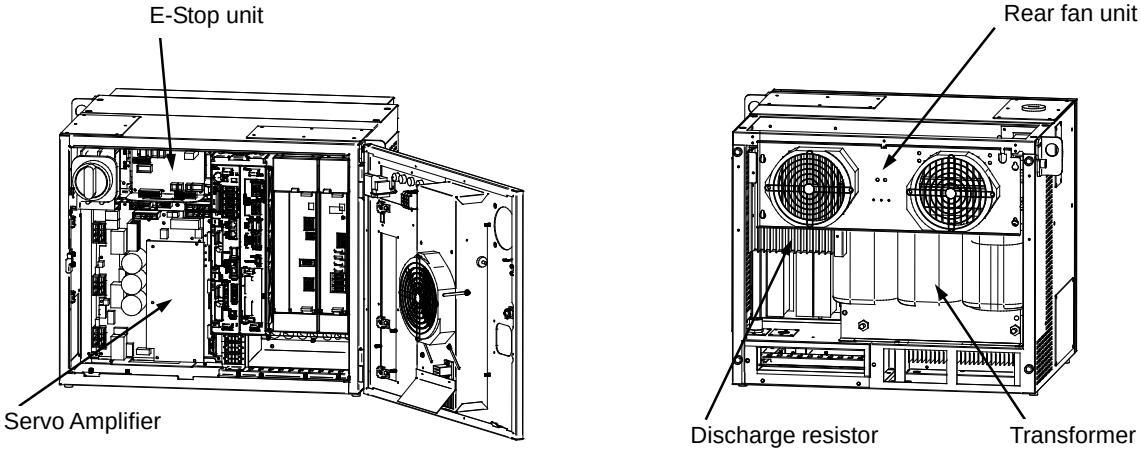

(A- cabinet)

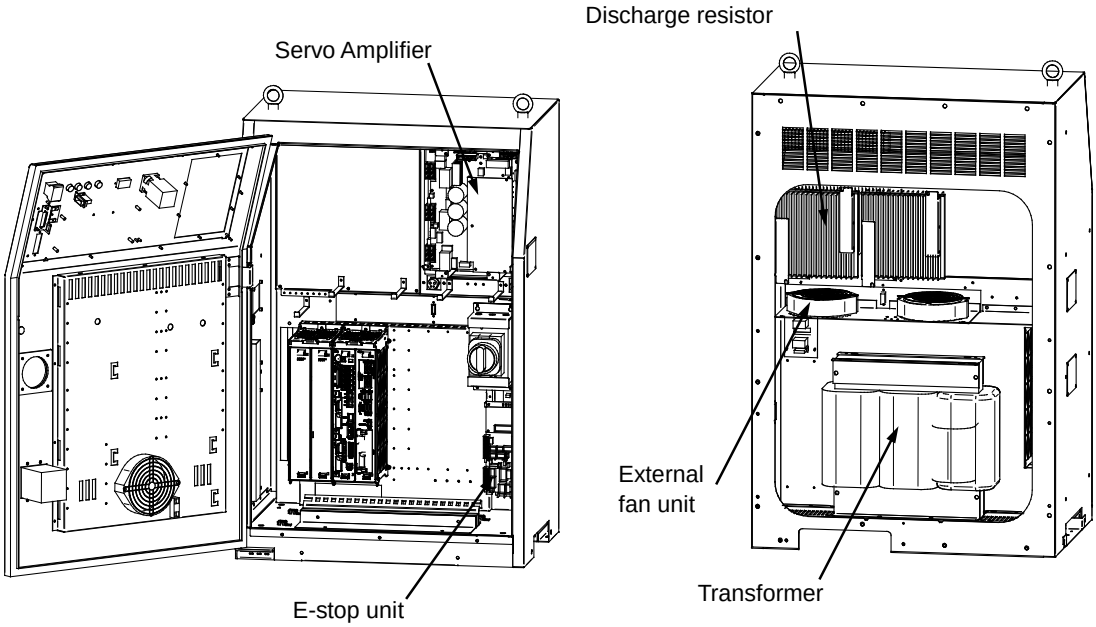

(B-cabinet)

Fig.3.5 (n) SRVO-049 OHAL1 alarm
SRVO-050 Collision Detect alarm
SRVO-051 CUER alarm

SRVO-055 FSSB com error 1 (G: i A: j)

(Explanation) A communication error has occurred between the main board and servo amplifier.
(Action 1) Check the optical fiber cable between the servo card on the main board and servo amplifier. Replace it if it is faulty.
(Action 2) Replace the servo card on the main board.
(Action 3) Replace the servo amplifier.

In case of Auxiliary Axis Option
(Action 1) Replace the communication cable (Optical fiber) on the COP10B side of the servo amplifier indicated by the alarm message.
(Action 2) Replace the servo amplifier that is indicated by the alarm message.
(Action 3) Replace the servo amplifier between main board and the indicated servo amplifier.
(Action 4) Replace the servo card or the auxiliary axis board.

SRVO-056 FSSB com error 2 (G: i A: j)

(Explanation) A communication error has occurred between the main board and servo amplifier.
(Action 1) Check the optical fiber cable between the servo card on the main board and servo amplifier. Replace it if it is faulty.
(Action 2) Replace the servo card on the main board.
(Action 3) Replace the servo amplifier.

In case of Auxiliary Axis Option
(Action) Take the same actions as for SRVO-055.

SRVO-057 FSSB disconnect (G:i A: j)

(Explanation) Communication was interrupted between the main board and servo amplifier.
A servo card corresponding to the set number of axes is not mounted. Check whether the set number of axes is valid. If the number is invalid, set the correct number.
(Action 1) Check whether fuse (F4) in the power supply unit has blown. If the fuse has blown, check and correct the cause then replace the fuse.
(Action 2) Check whether fuse (FS1) in the 6-axis servo amplifier has blown. If the fuse has blown, replace the 6-axis servo amplifier including the fuse.
(Action 3) Check the optical fiber cable between the servo card on the main board and servo amplifier. Replace it if it is faulty.
(Action 4) Replace the servo card on the main board.
(Action 5) Replace the servo amplifier.
(Action 6) Check that the robot connection cable (RP1) is in good condition, and there are no cuts or kinks visible. Check the internal cable of the robot (Pulsecoder cable) for a short circuit or connection to ground.
Before continuing to the next step, perform a complete controller backup to save all your programs and settings.
(Action 7) Replace the main board.

SRVO-058 FSSB init error (yy)

(Explanation) Communication was interrupted between the main board and servo amplifier.
(Action 1) Check whether fuse (F4) in the power supply unit has blown. If the fuse has blown, check and correct the cause, then replace the fuse.
(Action 2) Turn off the power and disconnect the CRF8 connector on the 6-axis servo amplifier. Turn on the power supply and then check whether this alarm occurs again. (Ignore the alarm SRVO-068 because of disconnecting the CRF8 connector.)
If this alarm does not occur, the robot connection cable (RP1) or the internal cable of the robot (Pulsecoder cable) may be short-circuited to ground. Check the cables and replace it if necessary.
(Action 3) Check whether fuse (FS1) on the 6-axis servo amplifier has blown. If the fuse has

blown, replace the servo amplifier including the fuse.

(Action 4) Check whether the LED (P5V and P3.3V) on the 6-axis servo amplifier is lit. If they are not lit, the DC power is not supplied to the servo amplifier.
Make sure the connector CP5 on the power supply unit and the connector CXA2B on the 6-axis servo amplifier are connected tightly. If they are connected tightly, replace the 6-axis servo amplifier.

(Action 5) Check the optical fiber cable between the servo card on the main board and servo amplifier. Replace it if it is faulty.

(Action 6) Replace the servo card on the main board.

(Action 7) Replace the 6-axis servo amplifier.

(Action 8) If the other units (the servo amplifier for the auxiliary axis and the line tracking board) are connected in the FSSB optical communication, disconnect these units and connect only 6-axis servo amplifier for the robot. Then turn on the power. If this alarm does not occur, search the failed unit and replace it.

Before executing the (Action9), perform a complete controller back up to save all your programs and settings.

(Action 9) Replace the main board.

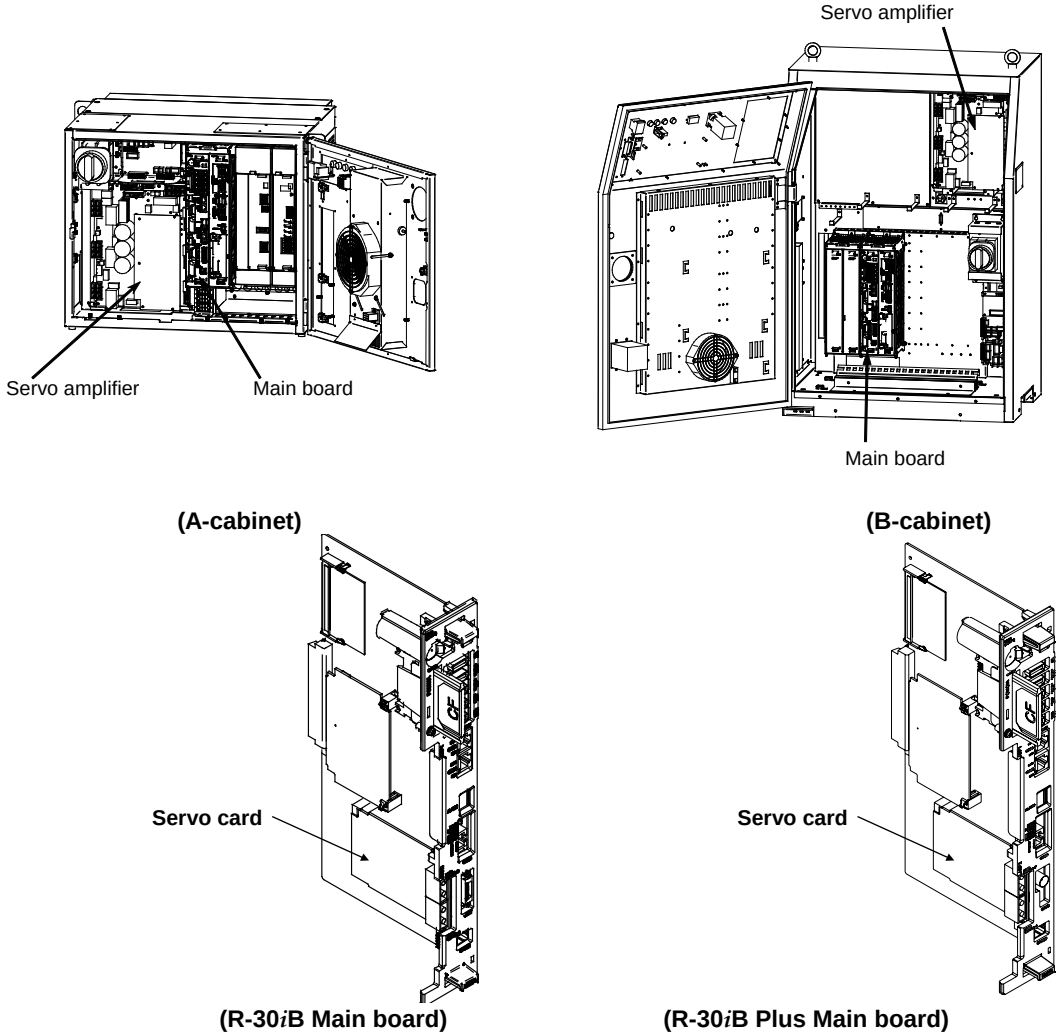

Fig.3.5 (o) SRVO-055 FSSB com error 1
SRVO-056 FSSB com error 2
SRVO-057 FSSB disconnect
SRVO-058 FSSB init error

SRVO-059 Servo amp init error

(Explanation) Servo amplifier initialization is failed.

(Action 1) Check the optical fiber cable between the servo card on the main board and servo amplifier. Replace it if it is faulty.

(Action 2) Turn off the power and disconnect the CRF8 connector on the 6-axis servo amplifier. Turn on the power supply and then check whether this alarm occurs again. (Ignore the alarm SRVO-068 because of disconnecting the CRF8 connector.)
If this alarm does not occur, the robot connection cable (RP1) or the internal cable of the robot (Pulsecoder cable) may be short-circuited to the ground. Check the cables and replace it if necessary.

(Action 3) Check whether the LED (P5V and P3.3V) on the 6-axis servo amplifier is lit. If they are not lit, the DC power is not supplied to the servo amplifier.
Make sure the connector CP5 on the power supply unit and the connector CXA2B on the 6-axis servo amplifier are connected tightly. If they are connected tightly, replace the 6-axis servo amplifier.

(Action 4) Replace the servo amplifier.

(Action 5) Replace the line tracking board (if installed).

(Action 6) Replace the motor.

SRVO-062 BZAL alarm (Group: i Axis: j)

(Explanation) This alarm occurs if battery voltage for Pulsecoder backup has declined, and backup cannot be performed.
A probable cause is a broken battery cable or no batteries in the robot.

(Action 1) Replace the battery in the battery box of the robot base.

(Action 2) Replace the motor of axis with which an alarm has been issued.

(Action 3) Check whether the mechanical unit cable for feeding power from the battery to the Pulsecoder is disconnected or grounded. If an abnormality is found, replace the cable.

> ⚠ **CAUTION**
> After correcting the cause of this alarm, set the system variable ($MCR.$SPC_RESET) to TRUE, then turn on the power again. Mastering is needed.

> **NOTE**
> This alarm might accompany the DTERR, CRCERR, or STBERR alarm. In this case, however, there may be no actual condition for this alarm.

SRVO-065 BLAL alarm (Group: i Axis: j)

(Explanation) The battery voltage for the Pulsecoder is lower than the rating.

(Action) Replace the battery.
(If this alarm occurs, turn on the power and replace the battery as soon as possible. A delay in battery replacement may result in the BZAL alarm being detected. In this case, the position data will be lost. Once the position data are lost, mastering will become necessary.)

SRVO-067 OHAL2 alarm (Grp:i Ax:j)

(Explanation) The temperature inside the Pulsecoder or motor is abnormally high, and the built-in thermostat has operated.

(Action 1) Check the robot operating conditions. If a condition such as the duty cycle and load weight has exceeded the rating, relax the robot load condition to meet the allowable range.

(Action 2) When power is supplied to the motor after it has become sufficiently cool, if the alarm still occurs, replace the motor.

SRVO-068 DTERR alarm (Grp:i Ax:j)

(Explanation) The serial Pulsecoder does not return serial data in response to a request signal.
(Action 1) Make sure that the robot connection cable (RP1) connector (CRF8) of 6-axis servo amplifier and the Pulsecoder connector of servo motor are connected tightly.
(Action 2) Check that the shielding of the robot connection cable (RP1) is grounded securely in the cabinet.
(Action 3) Replace the motor of axis with which an alarm has been issued.
(Action 4) Replace the servo amplifier of axis with which an alarm has been issued.
(Action 5) Replace the robot connection cable (RP1, RM1).
(Action 6) Replace the internal cable of the robot (for the Pulsecoder, motor cable).

SRVO-069 CRCERR alarm (Grp:i Ax:j)

(Explanation) The serial data have disturbed during communication.
(Action) See actions on SRVO-068

SRVO-070 STBERR alarm (Grp:i Ax:j)

(Explanation) The start and stop bits of the serial data are abnormal.
(Action) See actions on SRVO-068

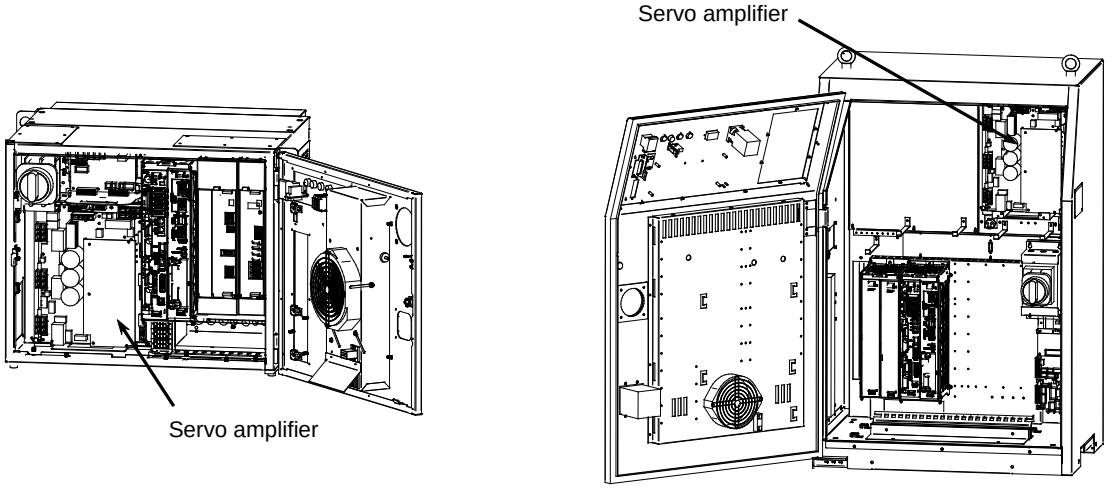

(A-cabinet) **(B-cabinet)**

Fig.3.5 (p) SRVO-059 Servo amp init error
SRVO-070 STBERR alarm

SRVO-071 SPHAL alarm (Grp:i Ax:j)

(Explanation) The feedback speed is abnormally high.
(Action) Action as same as the SRVO-068.

SRVO-072 PMAL alarm (Group: i Axis: j)

(Explanation) It is likely that the Pulsecoder is abnormal.
(Action) Replace the motor and remaster the robot.

SRVO-073 CMAL alarm (Group: i Axis: j)

(Explanation) It is likely that the Pulsecoder is abnormal or the Pulsecoder has malfunctioned due to noise.

(Action 1) Check whether the connection of the controller earth is good. Check the earth cable connection between controller and the robot connection cables are connected securely to the grounding plate.
(Action 2) Reinforce the earth of the motor flange. (In case of Auxiliary axis)
(Action 3) Reset the Pulse count.
(Action 4) Replace the motor.
(Action 5) Replace the robot connection cable (RM1, RP1).
(Action 6) Replace the internal cable of the robot (for the Pulsecoder, motor cable).

In case of Auxiliary Axis Option
(Action 1) Reinforce the earth of the flange of the motor that is indicated by the alarm message.
(Action 2) Replace the Pulsecoder that is indicated by the alarm message.

SRVO-074 LDAL alarm (Group: i Axis: j)

(Explanation) The LED in the Pulsecoder is broken.
(Action) Replace the motor, and remaster the robot.

SRVO-075 Pulse not established (G: i A: j)

(Explanation) The absolute position of the Pulsecoder cannot be established.
(Action) Reset the alarm, and jog the axis on which the alarm has occurred until the same alarm will not occur again.

SRVO-076 Tip Stick Detection (G: i A: j)

(Explanation) An excessive disturbance was assumed in servo software at the start of operation. (An abnormal load was detected. The cause may be welding.)
(Action 1) Check whether the robot has collided. Or check whether the machinery load of the corresponding axis is increased.
(Action 2) Check whether the load settings are valid.
(Action 3) Check whether the brake of the corresponding axis is released.
(Action 4) Check whether the load weight is within the rated range. If the weight exceeds the upper limit, decrease it to the limit.
(Action 5) Check whether the voltage input to the controller is within the rated voltage and also check whether the voltage set for the transformer of the controller is correct.
(Action 6) Replace the servo amplifier.
(Action 7) Replace the corresponding axis servo motor.
(Action 8) Replace the E-stop unit.
(Action 9) Replace the power cable of the robot connection cable in which the corresponding axis is connected.
(Action 10) Replace the internal cable of the robot (power/brake) in which the corresponding axis is connected.

In case of Auxiliary Axis Option
(Action 1) Take the same actions as for SRVO-023.

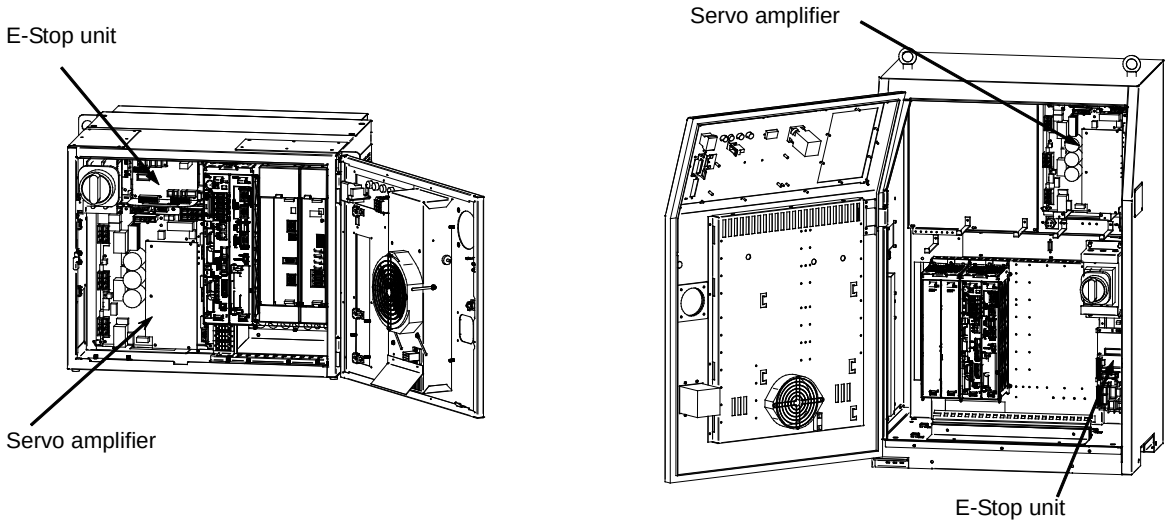

(A-cabinet) **(B-cabinet)**

Fig.3.5 (q) SRVO-076 Tip Stick Detection

SRVO-081 EROFL alarm (Track enc: i)

(Explanation) The pulse counter for line tracking has overflowed.
(Action 1) Check whether the condition of the line tracking exceeds the limitation.
(Action 2) Replace the motor.
(Action 3) Replace the line tracking board.

SRVO-082 DAL alarm (Track encoder: i)

(Explanation) The line tracking Pulsecoder has not been connected.
(Action 1) Check the connection cable at each end (the line tracking board and the motor side)
(Action 2) Check whether the shielding of the connection cable is connected securely to the grounding plate.
(Action 3) Replace the line tracking cable.
(Action 4) Replace the motor.
(Action 5) Replace the line tracking board.

SRVO-084 BZAL alarm (Track enc: i)

(Explanation) This alarm occurs if the backup battery for the absolute position of the Pulsecoder has not been connected. See the description about the BZAL alarm (SRVO-062).

SRVO-087 BLAL alarm (Track enc: i)

(Explanation) This alarm occurs if the voltage of the backup battery for the absolute position of the Pulsecoder has declined. See the description about the BLAL alarm (SRVO-065).

SRVO-089 OHAL2 alarm (Track enc: i)

(Explanation) The temperature inside the Pulsecoder is abnormally high, and the motor has overheated. When power is supplied to the Pulsecoder after it has become sufficiently cool, if the alarm still occurs. See the description about the OHAL2 alarm (SRVO-067).

SRVO-090 DTERR alarm (Track enc: i)

(Explanation) Communication between the Pulsecoder and line tracking board is abnormal. See the SRVO-068 DTERR alarm.
(Action 1) Check the connection of line tracking cable at each end (the line tracking board and the Pulsecoder)
(Action 2) Check whether the shielding of the line tracking cable is connected securely to the grounding plate.
(Action 3) Replace the motor.
(Action 4) Replace the line tracking cable.
(Action 5) Replace the line tracking board.

SRVO-091 CRCERR alarm (Track enc: i)

(Explanation) Communication between the Pulsecoder and line tracking board is abnormal.
(Action) Action as same as the SRVO-090.

SRVO-092 STBERR alarm (Track enc: i)

(Explanation) Communication between the Pulsecoder and line tracking board is abnormal.
(Action) Action as same as the SRVO-090.

SRVO-093 SPHAL alarm (Track enc: i)

(Explanation) This alarm occurs if the current position data from the Pulsecoder are higher than the previous position data.
(Action) Action as same as the SRVO-090.

SRVO-094 PMAL alarm (Track enc: i)

(Explanation) It is likely that the Pulsecoder is abnormal.
(Action) Replace the motor.

SRVO-095 CMAL alarm (Track enc: i)

(Explanation) It is likely that the Pulsecoder is abnormal or the Pulsecoder has malfunctioned due to noise. See the description about the CMAL alarm (SRVO-073).
(Action 1) Reinforce the earth of the flange of the Pulsecoder.
(Action 2) Reset the Pulse count.
(Action 3) Replace the motor.

SRVO-096 LDAL alarm (Track enc: i)

(Explanation) The LED in the Pulsecoder is broken. See the description about the LDAL alarm (SRVO-074).

SRVO-097 Pulse not established (Enc: i)

(Explanation) The absolute position of the Pulsecoder cannot be established. See the description about Pulse not established alarm (SRVO-075).
(Action 1) Reset the alarm, and jog the axis on which the alarm has occurred until the same alarm does not occur again. (Jog one motor revolution)

SRVO-105 Door open or E-Stop

(Explanation) The cabinet door is open.

- When the door switch is not mounted skip Action 1 and 2 and start from Action 3

(Action 1) When the door is open, close it.

(Action 2) Check the door switch and door switch connection cable. If the switch or cable is faulty, replace it.

(Action 3) Check that the CRMA92, CRMA94(A-cabinet), CRMA74(B-cabinet) connectors on the E-STOP unit and CRMA91 on the servo amplifier are connected securely.

(Action 4) Replace the emergency stop board.

(Action 5) Replace the 6-axis servo amplifier.

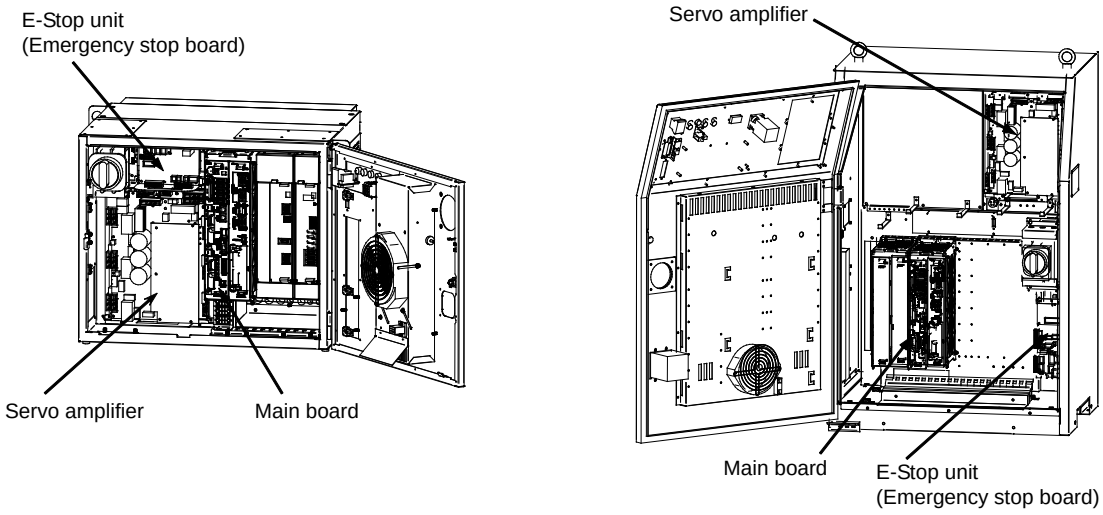

(A-cabinet) **(B-cabinet)**

Fig.3.5 (r) SRVO-105 Door open or E-stop

SRVO-123 Fan motor rev slow down (i)

(Explanation) The rotation speed of fan motor slows down.

(Action 1) Check the fan motor and its cables. Replace them if necessary.

(Action 2) Replace the backplane unit.

Before executing the (Action 3), perform a complete controller backup to save all your programs and settings.

(Action 3) Replace the main board.

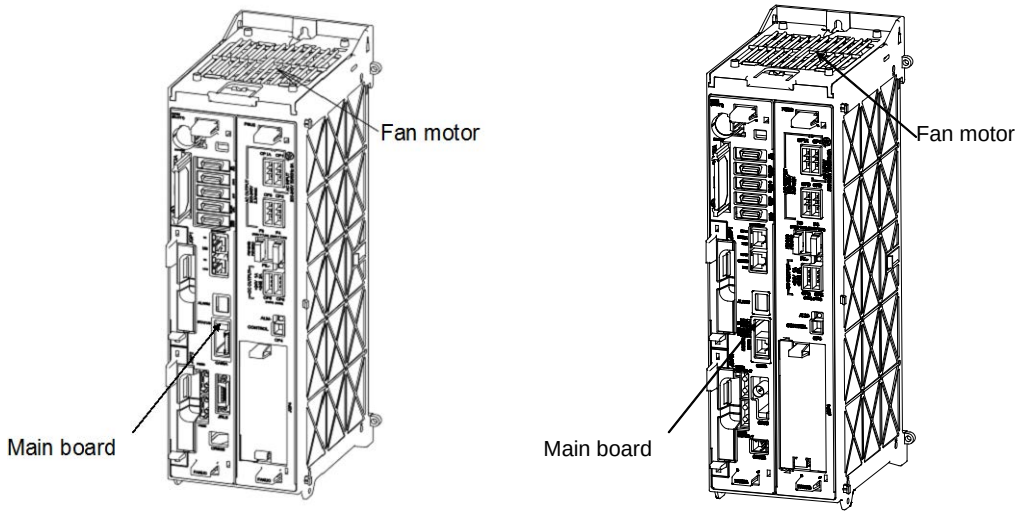

(R-30*i*B) **(R-30*i*B Plus)**

Fig.3.5 (s) SRVO-123 Fan motor rev slow down (i)

SRVO-130 OHAL1(PS) alarm (G: i A: j)

(Explanation) Heat sink temperature of the main circuit of the Power Supply(α*i*PS) is abnormally high.
(Action 1) Check the rotation of the cooling fan of the Power Supply(α*i*PS).
(Action 2) Decrease the duty cycle of operation. (Decrease override)
(Action 3) Replace the Power Supply(α*i*PS).

SRVO-131 LVAL%s alarm (G: i A: j)

(Explanation) Control supply voltage in the Power Supply(α*i*PS) has declined abnormally.
(Action 1) Replace the Power Supply(α*i*PS).
(Action 2) Replace the servo amplifier.
(Action 3) Replace the Power Supply Unit.

SRVO-133 FSAL(PS) alarm (G: i A: j)

(Explanation) The cooling fan for the Control circuit of the Power Supply(α*i*PS) stopped.
(Action 1) Check the status of the cooling fan. And replace it if it was abnormal.
(Action 2) Replace the Power Supply(α*i*PS).

[Regenarative resistor]

SRVO-134 DCLVAL alarm (G: i A: j)

[Power supply regeneration]

SRVO-134 DCLVAL(PS) alarm (G: i A: j)

(Explanation) This alarm occurs during the robot operation. The DC voltage (DC link voltage) of the main circuit power supply for the 6-axis servo amplifier is abnormally low.
(Action 1) It is possible that an instant disconnection of power source causes this alarm. Check whether an instant disconnection occurred.
(Action 2) Check the input voltage to the controller is within the rated voltage. And check the setting of the transformer is correct.
(Action 3) Modify the program in order that robot and the auxiliary axis do not accelerate simultaneously in the system with the auxiliary axis.
(Action 4) Replace the E-stop unit.
(Action 5) Replace the servo amplifier(6-Axis amplifier).
(Action 6) Replace the Power Supply(α*i*PS).

SRVO-135 FSAL alarm (G: i A: j)

(Explanation) Faulty internal fan motor of the auxiliary axis servo amplifier.
(Action 1) Check whether there is any foreign material in the fan.
(Action 2) Be sure to push the faceplate (control printed-circuit board) as far as it will go.
(Action 3) Check that the fan connector is attached correctly.
(Action 4) Replace the fan.
(Action 5) Replace the auxiliary servo amplifier that is indicated by the alarm message.

SRVO-136 DCLVAL alarm (G: i A: j)

(Explanation) The DC voltage (DC link voltage) of the main circuit power supply for the servo amplifier(α*i*SV) has declined abnormally.
(Action 1) Check that the wiring of the servo amplifier (α*i*SV) and the wiring is correct.
(Action 2) Replace the servo amplifier (α*i*SV) that is indicated by the alarm message.

In case of Auxiliary Axis Option
<Case 1> This alarm occurred during robot operation.
(Action 1) Check to see if the input voltage of the controller is within its rated voltage and the voltage setting of the transformer is right.

(Action 2) It is likely that the supply voltage stops instantaneously. Check the power supply.
(Action 3) Replace the E-STOP unit.
(Action 4) Replace the servo amplifier.
<Case 2> This alarm occurs while the power up sequence or right after inputting reset signal:
(Action 1) Check whether the circuit breaker in the emergency stop unit is off. If it is off, check the servo amplifier and the wiring between the servo amplifier and the emergency stop unit. If anything is abnormal, replace it.
(Action 2) Check to see if the input voltage of the controller is within its rated voltage and the voltage setting of the transformer is right.
(Action 3) Replace the E-stop unit.
(Action 4) Replace the servo amplifier that is indicated by the alarm message.
<Case 3> This alarm occurs right after pushing emergency stop button.
(Action 1) This alarm will occur in case the servo amplifier primary power is removed before an emergency stop. Check whether the auxiliary axis unit is installed correctly.

SRVO-156 IPMAL alarm (G: i A: j)

(Explanation) Abnormally high current flowed through the main circuit of the servo amplifier.
(Action 1) Turn off the power, and disconnect the power cable of the corresponding axis from the servo amplifier indicated by the alarm message. (And disconnect the brake cable (CRR88 on the servo amplifier) to avoid the axis falling unexpectedly.) Turn on the power, and if the alarm occurs again, replace the servo amplifier.
(Action 2) Turn off the power and disconnect the power cable of the corresponding axis from the servo amplifier indicated by the alarm message, and check that there is no conduction between U, V, W and GND. If there is conduction, it indicates the power cable is faulted, replace the power cable of the corresponding axis.
(Action 3) Turn off the power and disconnect the power cable from the servo amplifier by the alarm message, and measure the resistance between their U and V, V and W and W and U with an ohmmeter that has a very low resistance range. If one of the resistances at the three places is much smaller than other two, there is likely to be a short-circuit between phases, the motor, the power cable is defective. Check each item in detail and replace it if necessary.

SRVO-157 CHGAL alarm (G: i A: j)

(Explanation) The capacitor on the servo amplifier was not charged properly within the specified time when the servo power is on.
(Action 1) Check the three-phase input voltage to the controller is within the rated voltage and phase is not lack. And check the setting of the transformer is correct.
(Action 2) Check that the circuit breaker of the E-Stop unit is on and has not tripped.
(Action 3) Make sure that the servo amplifier CRRA12 and emergency stop board CRRA12 connector are connected tightly. If α*i*PS is used, make sure that the α*i*PS CRRA12 connector is connected tightly.
(Action 4) Replace the E-stop unit.
(Action 5) Replace the 6-Axis servo amplifier.
(Action 6) Replace the α*i*PS.

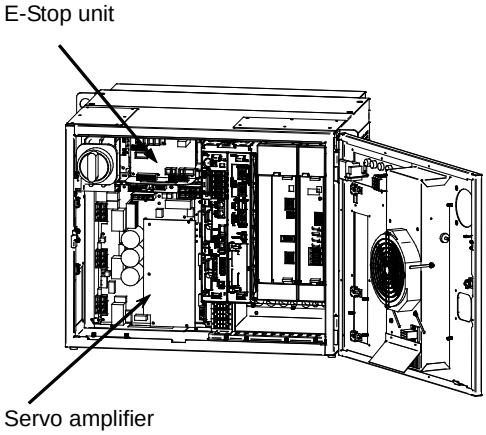

(A-cabinet)

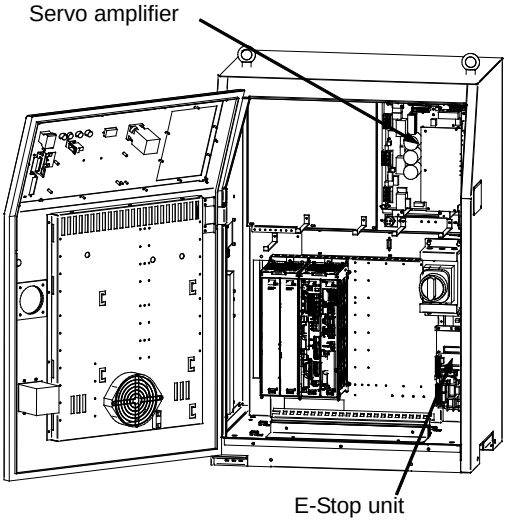

(B-cabinet)

Fig.3.5 (t) SRVO-136 DCLVAL alarm
SRVO-156 IPMAL alarm
SRVO-157 CHGAL alarm

SRVO-204 External (SVEMG abnormal) E-stop

(Explanation) The switch connected across EES1 – EES11 or EES2 – EES21 on the TBOP13(A-cabinet) or TBOP11(B-cabinet) on the emergency stop board was pressed, but the EMERGENCY STOP line was not disconnected.

(Action 1) Check the switch and cable connected to 1(EES1) – 2(EES11) and 3(EES2) – 4(EES21) on the TBOP13(A-cabinet) or TBOP11(B-cabinet) on the emergency stop board. If the cable is abnormal, replace it.

(Action 2) Replace the emergency stop board.

(Action 3) Replace the 6-Axis servo amplifier.

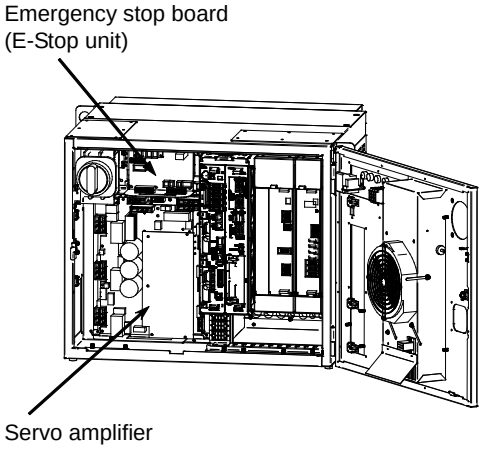

(A-cabinet)

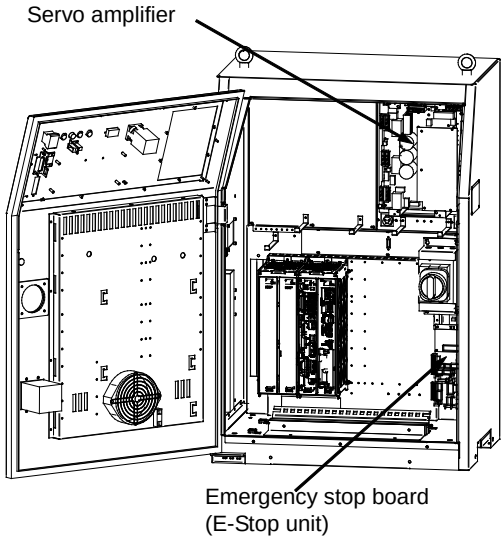

(B-cabinet)

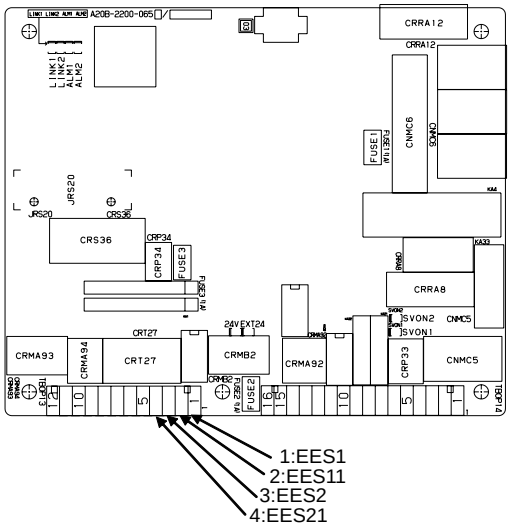

(A-cabinet/Emergency stop board)

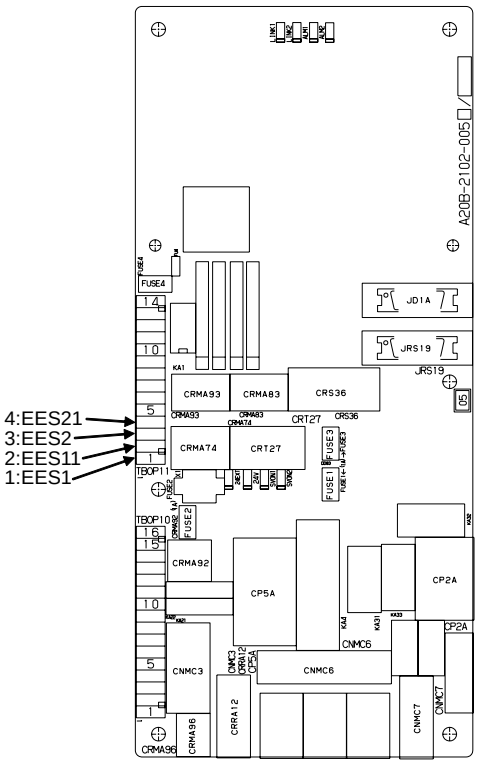

(B-cabinet/Emergency stop board)

Fig.3.5 (u) SRVO-204 External (SVEMG abnormal) E-stop

SRVO-205 Fence open (SVEMG abnormal)

(Explanation) The switch connected across EAS1 – EAS11 or EAS2 – EAS21 of the terminal block the TBOP13(A-cabinet) or TBOP11(B-cabinet) on the emergency stop board was opened, but the EMERGENCY STOP line was not disconnected.

(Action 1) Check the switch and cable connected to 5(EAS1) –6(EAS11), 7(EAS2) – 8(EAS21) of the terminal block TBOP13(A-cabinet) or TBOP11(B-cabinet) on the emergency stop board. If the cable is abnormal, replace it.

(Action 2) Replace the emergency stop board.

(Action 3) Replace the 6-Axis servo amplifier.

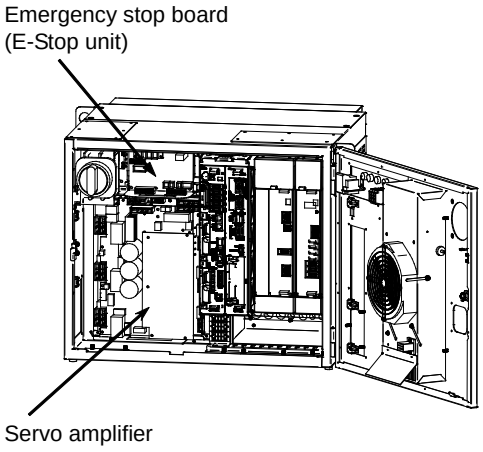

(A-cabinet)

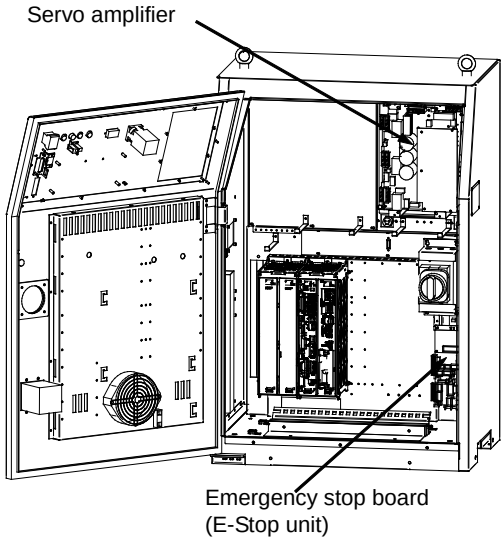

(B-cabinet)

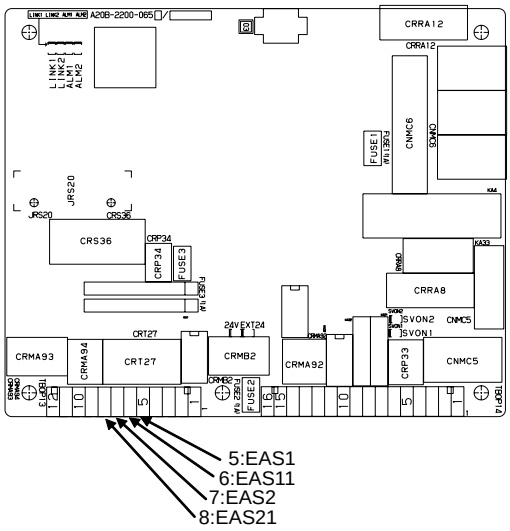

(Emergency stop board/A-cabinet)

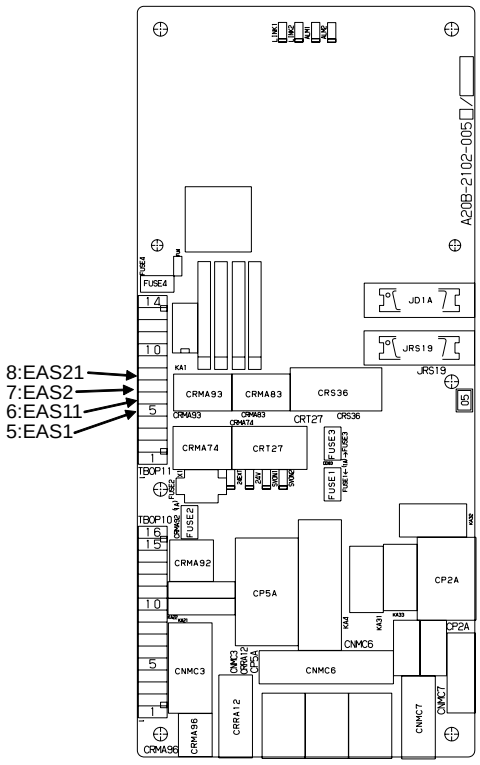

(Emergency stop board/B-cabinet)

Fig.3.5 (v) SRVO-205 Fence open (SVEMG abnormal)

SRVO-206 Enabling device (Deadman switch) (SVEMG abnormal)

(Explanation) When the teach pendant was enabled, the enabling device (the deadman switch) was released or pressed strongly, but the emergency stop line was not disconnected.

(Action 1) Replace the teach pendant.

(Action 2) Check the teach pendant cable. If it is inferior, replace the cable.

(Action 3) Replace the emergency stop board.

(Action 4) When the NTED signal is used, check whether the cabling of the signal connected to the emergency stop board is correct.

(Action 5) Replace the 6-Axis servo amplifier.

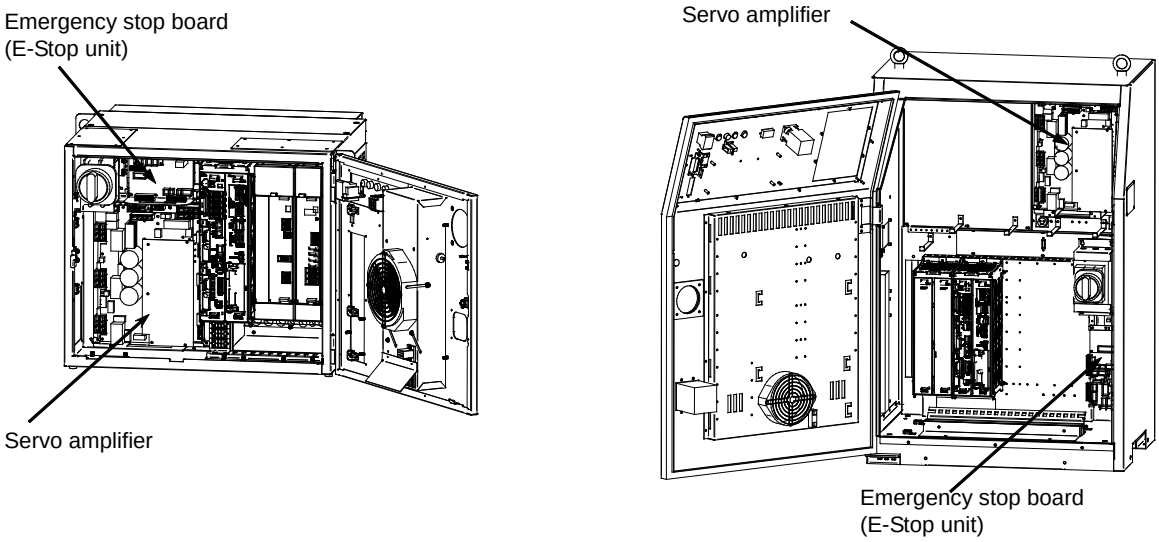

(A-cabinet) **(B-cabinet)**

Fig.3.5 (w) SRVO-206 Enabling device (Deadman switch) (SVEMG abnormal)

SRVO-213 E-STOP Board FUSE2 blown

(Explanation) A fuse (FUSE2) on the emergency stop board has blown, or no voltage is supplied to EXT24V.
In systems where multiple safety I/O devices are connected, the number of the safety I/O device that the alarm occurs is displayed in the end of the message such as (1). The safety I/O device number corresponds to the sequence of the safety I/O devices connected by the I/O link *i* is displayed in DCS Safety I/O device menu.

(Action 1) Check whether the fuse (FUSE2) on the emergency stop board has blown. If the fuse has blown, 24EXT may be short-circuited to 0EXT. Take Action 2. If fuse (FUSE2) has not blown, take Action 3 and followings.

(Action 2) Disconnect the connection destinations of 24EXT that can cause grounding then check that the fuse (FUSE2) does not blow. Disconnect the following on the emergency stop board then turn on the power:
- CRS36
- CRT27
- TBOP13(A-cabinet) or TBOP11(B-cabinet) :EES1, EES11, EAS1, EAS11, EGS1, EGS11

If the fuse (FUSE2) does not blow in this state, 24EXT and 0EXT may be short-circuited at any of the connection destinations above. Isolate the faulty location then take action.
If the fuse (FUSE2) blows even when the connection destinations above are detached, replace the emergency stop board.

(Action 3) Check whether 24 V is applied to between EXT24V and EXT0V of TBOP14(A-cabinet), TBOP10(B-cabinet). If not, check the external power supply circuit.

If no external power supply is used, check whether the terminals above are connected to the INT24V and INT0V terminals, respectively.

(Action 4) Replace emergency stop board .

(Action 5) Replace the teach pendant cable.

(Action 6) Replace the teach pendant.

(Action 7) Replace the operator's panel cable (CRT27).

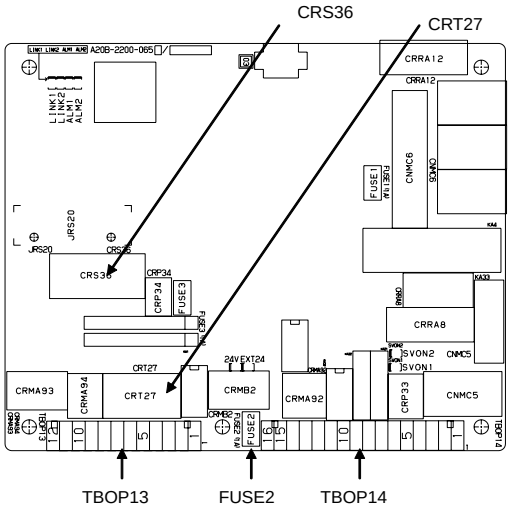

(Emergency stop board/A-cabinet)

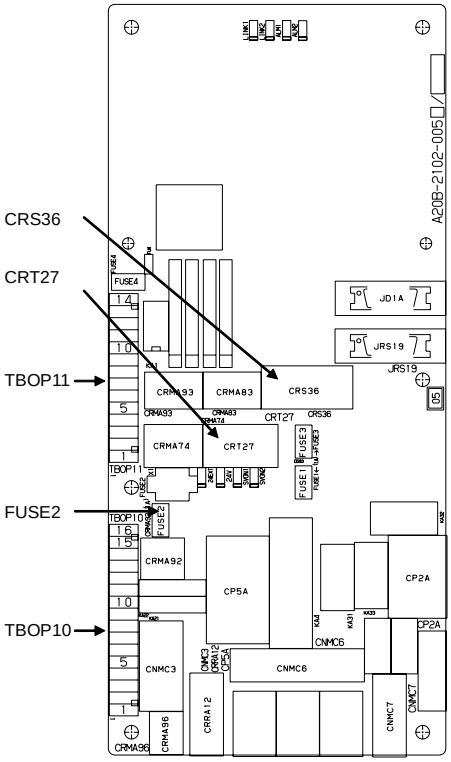

(Emergency stop board/B-cabinet)

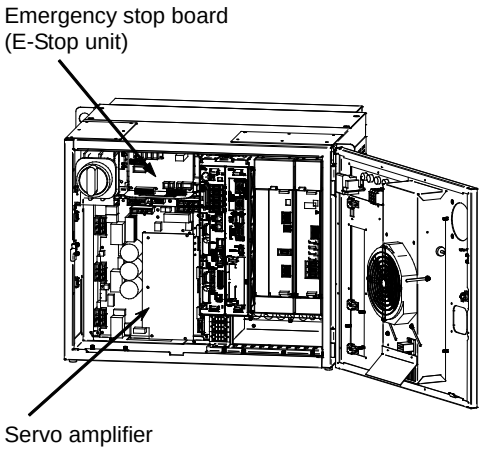

(A-cabinet)

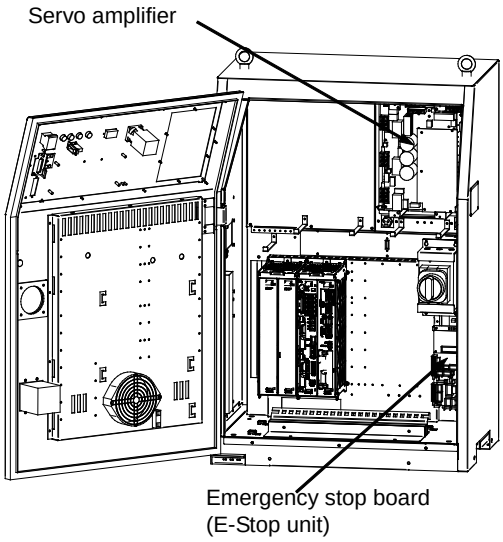

(B-cabinet)

Fig.3.5 (x) SRVO-213 E-STOP Board FUSE2 blown

SRVO-214 6ch amplifier fuse blown (R: i)

(Explanation) A fuse (FS2 or FS3) in the 6-Axis servo amplifier has blown.
(Action 1) A fuse is blown, eliminate the cause, and then replace the fuse. (See Section 3.6)
(Action 2) Replace the 6-Axis servo amplifier.

SRVO-215 Fuse blown (Aux.Axis)

(Explanation) The fuse (FU2) on the brake unit is blown.
(Action) Replace this fuse after replacing the brake cable because it may be defective. (If this fuse is blown, it may be caused by some defect of the brake cable.)

SRVO-216 OVC (total) (Robot: i)

(Explanation) The current (total current for six axes) flowing through the motor is too large.
(Action 1) Slow the motion of the robot where possible. Check the robot operation conditions. If the robot is used with a condition exceeding the duty or load weight robot rating, reduce the load condition value to the specification range.
(Action 2) Check the input voltage to the controller is within the rated voltage and no phase is lack. And check the setting of the transformer is correct.
(Action 3) Replace the 6-Axis servo amplifier.

SRVO-217 E-STOP Board not found

(Explanation) The emergency stop board is not found when the controller power is turned on.
(Action 1) Check whether fuse (FUSE1) on the emergency stop board has blown. If the fuse has blown, check and correct the cause then replace the fuse.
(Action 2) Check whether fuse (F3) on the power supply unit has blown. If the fuse has blown, check and correct the cause then replace the fuse.
(Action 3) Check the cable between emergency stop board and main board. Replace them if necessary.
(Action 4) Replace the E-STOP unit.
Before executing the (Action 5), perform a complete controller backup to save all your programs and settings.
(Action 5) Replace the main board.

SRVO-219 Safety I/O board fuse1 blown %s
Safety I/O board fuse2 blown %s

(Explanation) A fuse on the additional Safety I/O board has blown.
The number of the safety I/O device that the alarm occurs is displayed in the end of the message such as (1). The safety I/O device number is displayed in DCS Safety I/O device menu.
(Action 1) Check whether the fuse (FU1 or FU2) on the additional Safety I/O board has blown.
If the fuse has blown, check whether there is ground-fault occurring at the connection destination of CRMA90. Remove the cause of the ground-fault and replace the fuse.
(Action 2) Replace the additional Safety I/O board.

SRVO-221 Lack of DSP (G: i A: j)

(Explanation) A controlled axis card corresponding to the set number of axes is not mounted.
(Action 1) Check whether the set number of axes is valid. If the number is invalid, set the correct number.
(Action 2) Replace the servo card with a card corresponding to the set number of axes.

SRVO-222 Lack of Amp (Amp: i)

(Explanation] The servo amplifiers were not found at the power up sequence.
(Action 1) Turn off the controller, disconnect the pulse coder cable JF1,JF2 from the servo amplifier and turn on the controller again. If this alarm dose not occurs, the pulse

coder cable may have +5V ground fault.(The LED of the servo amplifier may display blinking “-“ when the pulse coder cable has +5V ground fault.)

(Action 2) Replace the servo amplifier for auxiliary axis.

(Action 3) Replace the 6 axis amplifier.

(Action 4) Replace the optical fiber cable.

(Action 5) Replace the servo card or the auxiliary axis servo card.

SRVO-223 DSP dry run (a,b)

(Explanation) A servo DSP initialization failure occurred due to hardware failure or wrong software setting. Then, the software entered DSP dry run mode. The first number indicates the cause of the failure. The second number is extra information.

(Action) Perform an action according to the first number that is displayed in the alarm message.

1: This is a warning due to starting with $scr.$startup_cnd=12.

2,3,4,7: Replace a servo card.

5: Invalid ATR setting. Check whether software axis config (FSSB line number, hardware start axis number, amplifier number, and amplifier type) is correct.

6: SRVO-180 occurs simultaneously. Controllable axis does not exist in any group. Execute aux axis setting to add axis at controlled start.

8,10: SRVO-058 (FSSB init error) occurs simultaneously. Follow the remedy of SRVO-058.

9: No amplifier can be identified. Perform the following actions.

- •Check the hardware connection whether servo amplifier is connected properly.
- •Check the optical fiber cable whether the optical fiber is connected properly.
- •In case of using aux. axis amplifier, make sure that the connectors CXA2A (6-axis amplifier) or CXA2B (aux. axis amplifier) are securely attached to the servo amplifier.
- •Check whether the servo amplifier power is supplied.
- •Check whether the fuse on the servo amplifier has blown.
- •Replace the optical fiber cable connecting to servo amplifier.
- •Replace the servo amplifier

11: Specified axis number is on the non-existing servo card. Check whether software axis config (FSSB line number) is correct or auxiliary axis board may be necessary.

12: SRVO-059 (Servo amp init error) occurs simultaneously. Follow the remedy of SRVO-059.

13,14,15: Document the events that led to the error, and contact your FANUC technical representative.

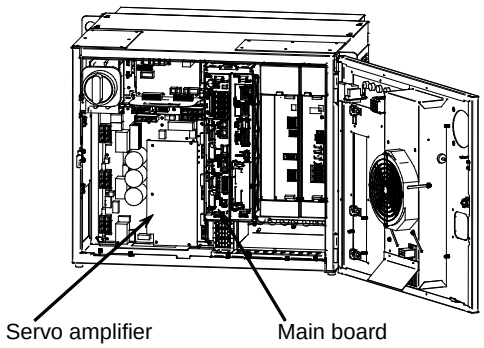

(A-cabinet)

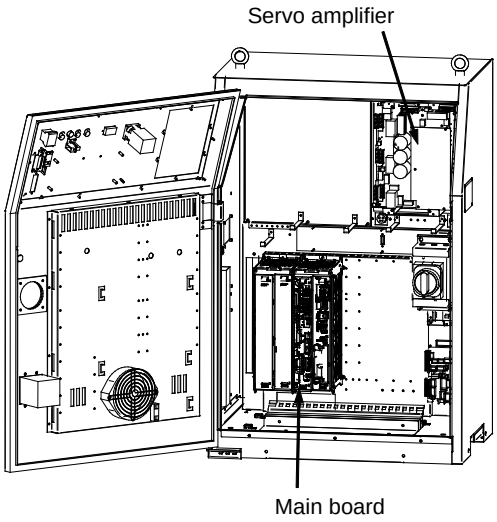

(B-cabinet)

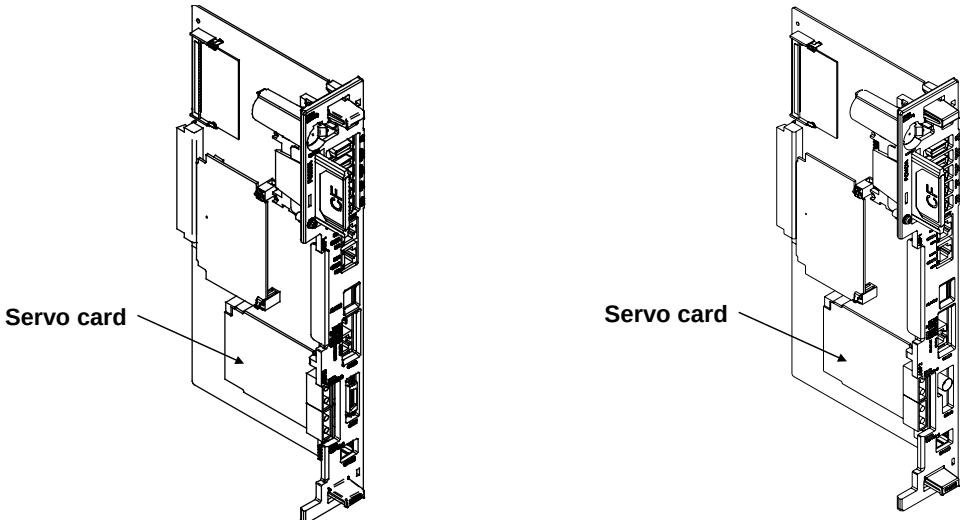

(R-30*i*B Main board) **(R-30*i*B Plus Main board)**

Fig.3.5 (y) **SRVO-214 6ch amplifier fuse blown (Panel PCB)**
SRVO-216 OVC (total)
SRVO-221 Lack of DSP
SRVO-223 DSP dry run (%d,%d)

SRVO-230 Chain 1 abnormal a, b
SRVO-231 Chain 2 abnormal a, b

(Explanation) A mismatch occurred between duplicate safety signals.
SRVO-230 is issued if such a mismatch that a contact connected on the chain 1 side (between EES1 and EES11, between EAS1 and EAS11, between EGS1 and EGS11, and so forth) is closed, and a contact on the chain 2 side (between EES2 and EES21, between EAS2 and EAS21, between EGS2 and EGS21, and so forth) is open occurs.
SRVO-231 is issued if such a mismatch that a contact on the chain 1 side is open, and a contact on the chain 2 side is closed occurs.
If a chain error is detected, correct the cause of the alarm then reset the alarm according to the method described later.

(Action) Check the alarms issued at the same time in order to identify which signal the mismatch occurred.
SRVO-266 through SRVO-275 and SRVO-370 through SRVO-385 are issued at the same time. Take the action(s) described for each item.

> ⚠ **WARNING**
> If this alarm is issued, do not reset the chain error alarm until the failure is identified and repaired. If robot use is continued with one of the duplicate circuits being faulty, safety may not be guaranteed when the other circuit fails.

> ⚠ **CAUTION**
> 1 The state of this alarm is preserved by software. After correcting the cause of the alarm, reset the chain error alarm according to the chain error reset procedure described later.
> 2 Until a chain error is reset, ordinary reset operation must not be performed. If an ordinary reset operation is performed before chain error resetting, the message "SRVO-237 Chain error cannot be reset" is displayed on the teach pendant.

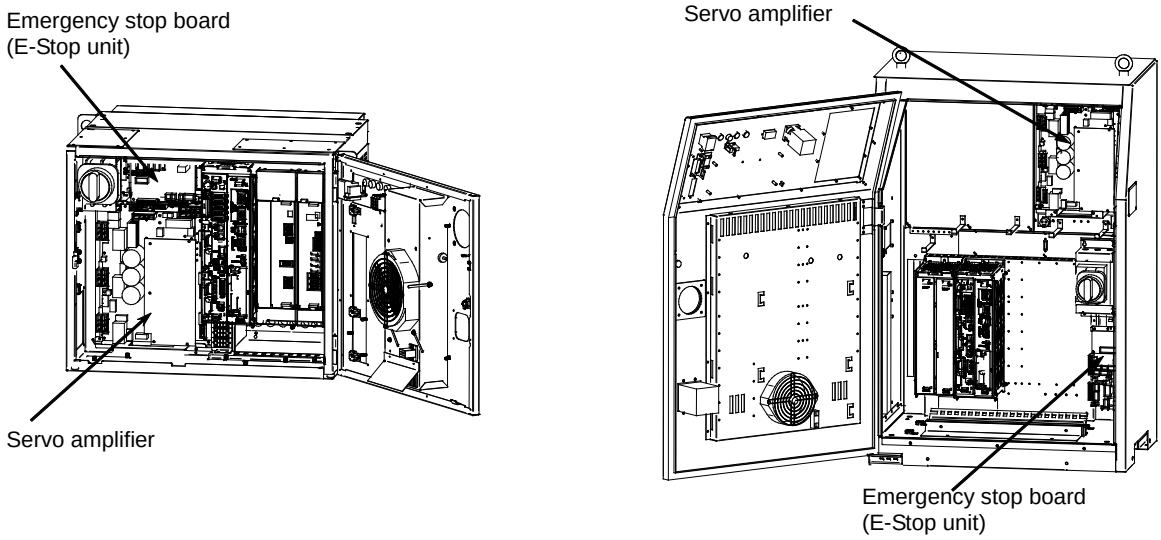

(A-cabinet) **(B-cabinet)**

Fig.3.5 (z) SRVO-230 Chain 1 (+24V) abnormal a, b
SRVO-231 Chain 2 (0V) abnormal a, b

Alarm history display method

1. Press the screen selection key on the teach pendant.
2. Select [4 ALARM] on the teach pendant.
3. Press F3 [HIST] on the teach pendant.

Chain error reset procedure

> ⚠ **CAUTION**
> Do not perform this operation until the cause of the alarm is corrected.

<Method 1>

1. Press the emergency stop button.
2. Press [MENU].
3. Select 0 [NEXT] then select 6 [SYSTEM].
4. Select F1 [TYPE].
5. Select 6 [Config].
6. Move the cursor to 28 [Reset CHAIN FAILURE detection].
7. Press F4 [TRUE] to reset the fault.
8. Press the [RESET] button on the teach pendant or operator panel.

<Method 2>

1. Press [MENU].
2. Select 4 [ALARM].
3. Select F1 [TYPE].
4. Select [Alarm Log].
   If Alarm Hist screen is displayed, press F3 [ACTIVE].
5. Select F4 [RES_1CH].
6. Select F4 [YES] to reset the fault.
7. Press the [RESET] button on the teach pendant or operator panel.

SRVO-232 NTED input

(Explanation) In the teach mode, the NTED signal connected to the connector (CRMA96) on the emergency stop board was placed in the open state.
(Action 1) Check the operation of the device connected to NTED.
(Action 2) Replace the teach pendant.
(Action 3) Replace the teach pendant cable.
(Action 4) Replace the emergency stop board
(Action 5) Check the mode switch and its cable. Replace them if a defect is found.

SRVO-233 TP OFF in T1, T2

(Explanation) Teach pendant is disabled when the mode switch is T1 or T2.
Or controller door is opened.
(Action 1) Enable the teach pendant if in teaching operation. In other case, the mode switch should be changed to AUTO mode.
(Action 2) Close the controller door, if open.
(Action 3) Replace the teach pendant.
(Action 4) Replace the teach pendant cable.
(Action 5) Replace the mode switch.
(Action 6) Replace the emergency stop board.
(Action 7) Replace the 6-Axis servo amplifier.

SRVO-235 Short term Chain abnormal

(Explanation) Short term single chain failure condition is detected.

- Possible cause of this alarm are;
  - Half release of enabling device (deadman switch)
  - Half press of emergency stop switch.

(Action 1) Cause the same error to occur again, and then perform resetting.
(Action 2) Replace the emergency stop board.
(Action 3) Replace the 6-Axis servo amplifier.

SRVO-251 DB relay abnormal (G: i A: j)

(Explanation) An abnormality was detected in the internal relay (DB relay) of the servo amplifier.
(Action 1) Replace the servo amplifier.
(Action 2) Replace the E-stop unit.

SRVO-252 Current detect abnl (G: i A: j)

(Explanation) An abnormality was detected in the current detection circuit inside the servo amplifier.
(Action) Replace the servo amplifier.

SRVO-253 Amp internal over heat (G: i A: j)

(Explanation) An overheat was detected inside the servo amplifier.
(Action) Replace the servo amplifier.

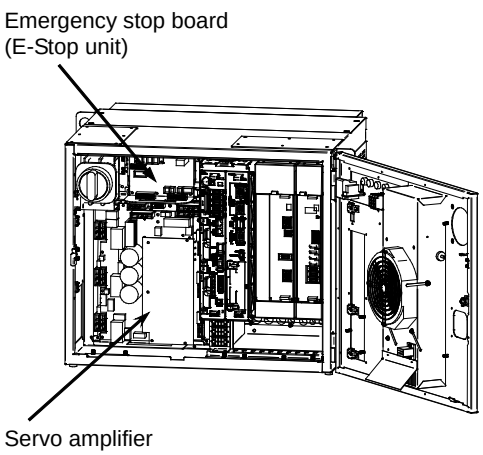

(A-cabinet)

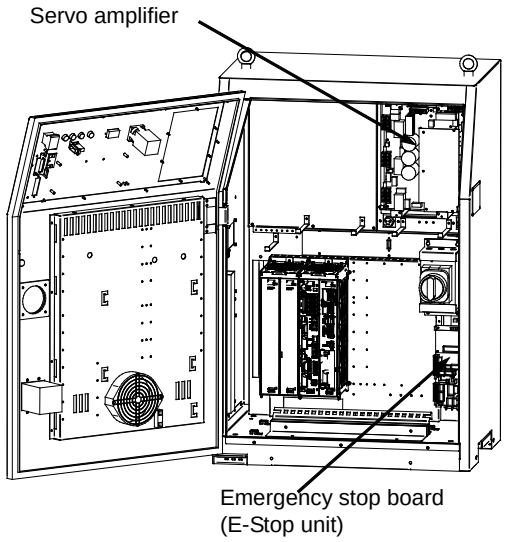

(B-cabinet)

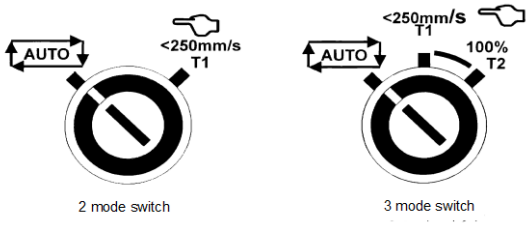

(Mode switch)

Fig.3.5 (aa) SRVO-232 NTED input
SRVO-233 TP OFF in T1, T2
SRVO-235 Short term Chain abnormal
SRVO-251 DB relay abnormal
SRVO-252 Current detect abnl
SRVO-253 Amp internal over heat

SRVO-266 FENCE1 status abnormal
SRVO-267 FENCE2 status abnormal

(Explanation) A chain alarm was detected with the EAS (FENCE) signal.
(Action 1) Check whether the circuitry connected to the dual input signal (EAS) is faulty.
(Action 2) Check whether the timing of the dual input signal (EAS) satisfies the timing specification
(See Subsection 3.3.5, Fig 3.3.5(c) in CONNECTIONS).
(Action 3) Replace the emergency stop board.

> ⚠ **WARNING**
> If this alarm is issued, do not reset the chain error alarm until the failure is identified and repaired. If robot use is continued with one of the duplicate circuits being faulty, safety may not be guaranteed when the other circuit fails.

> **NOTE**
> For the procedure of recovery from this alarm, see the descriptions of SRVO-230 and SRVO-231.

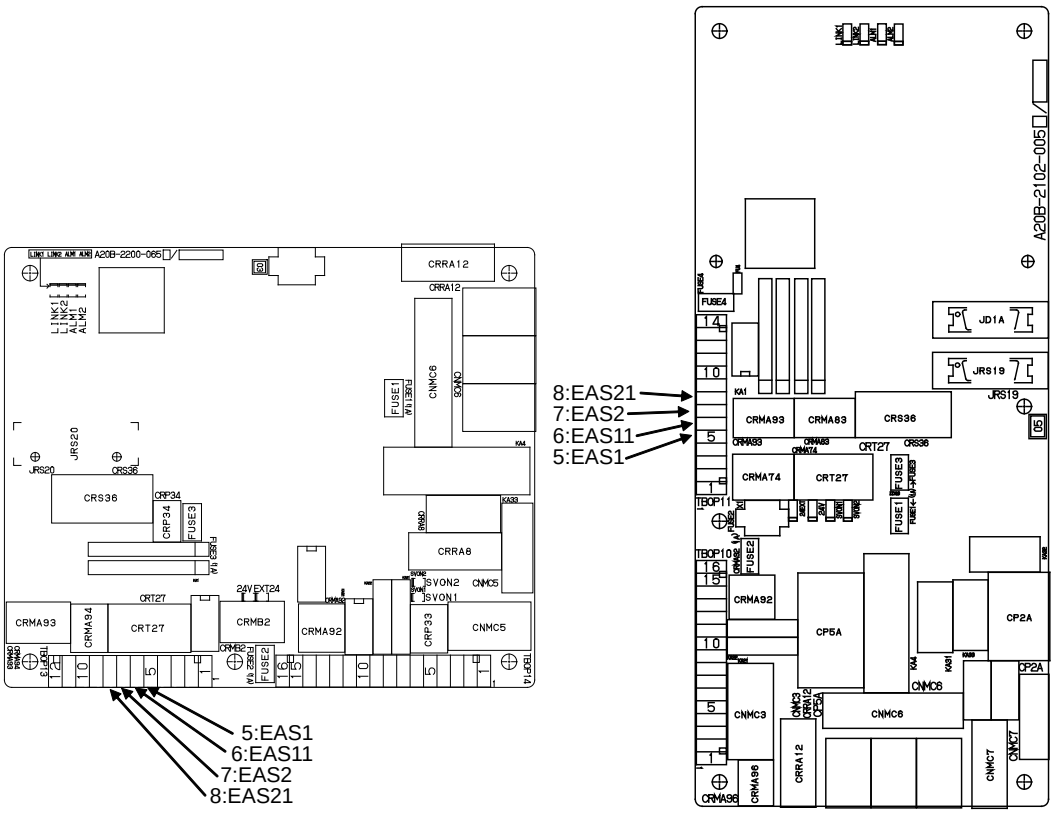

(Emergency stop board/A-cabinet) **(Emergency stop board/B-cabinet)**

Fig.3.5 (ab) SRVO-266 FENCE1 status abnormal
SRVO-267 FENCE2 status abnormal

SRVO-268 SVOFF1 status abnormal
SRVO-269 SVOFF2 status abnormal

(Explanation) A chain alarm was detected with the EGS (SVOFF) signal.
(Action 1) Check whether the circuitry connected to the dual input signal (EGS) is faulty.
(Action 2) Check whether the timing of the dual input signal (EGS) satisfies the timing specification
(See Subsection 3.3.5, Fig 3.3.5(c) in CONNECTIONS).
(Action 3) Replace the emergency stop board.

> ⚠ **WARNING**
> If this alarm is issued, do not reset the chain error alarm until the failure is identified and repaired. If robot use is continued with one of the duplicate circuits being faulty, safety may not be guaranteed when the other circuit fails.

> **NOTE**
> For the procedure of recovery from this alarm, see the descriptions of SRVO-230 and SRVO-231.

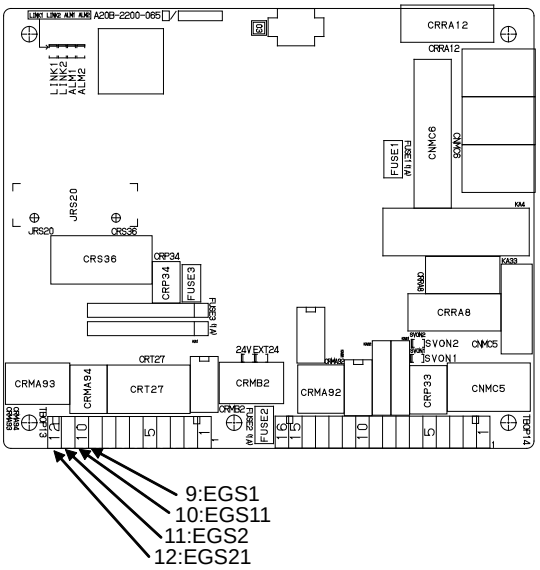

(Emergency stop board/A-cabinet)

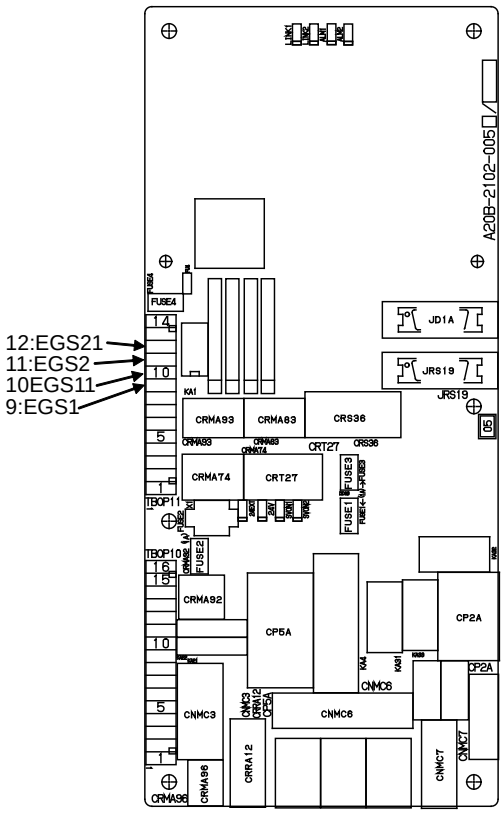

(Emergency stop board/B-cabinet)

Fig.3.5 (ac) SRVO-268 SVOFF1 status abnormal
SRVO-269 SVOFF2 status abnormal

SRVO-270 EXEMG1 status abnormal
SRVO-271 EXEMG2 status abnormal

(Explanation) A chain alarm was detected with the EES (EXEMG) signal.
(Action 1) Check whether the circuitry connected to the dual input signal (EES) is faulty.
(Action 2) Check whether the timing of the dual input signal (EES) satisfies the timing specification
(See Subsection 3.3.5, Fig 3.3.5(c) in CONNECTIONS).
(Action 3) Replace the teach pendant cable.
(Action 4) Replace the teach pendant.
(Action 5) Replace the emergency stop board.
(Action 6) Replace the emergency stop switch on the operator's panel.
Before executing the (Action 7), perform a complete controller backup to save all your programs and settings.
(Action 7) Replace the main board.

> ⚠ **WARNING**
> If this alarm is issued, do not reset the chain error alarm until the failure is identified and repaired. If robot use is continued with one of the duplicate circuits being faulty, safety may not be guaranteed when the other circuit fails.

> **NOTE**
> For the procedure of recovery from this alarm, see the descriptions of SRVO-230 and SRVO-231.

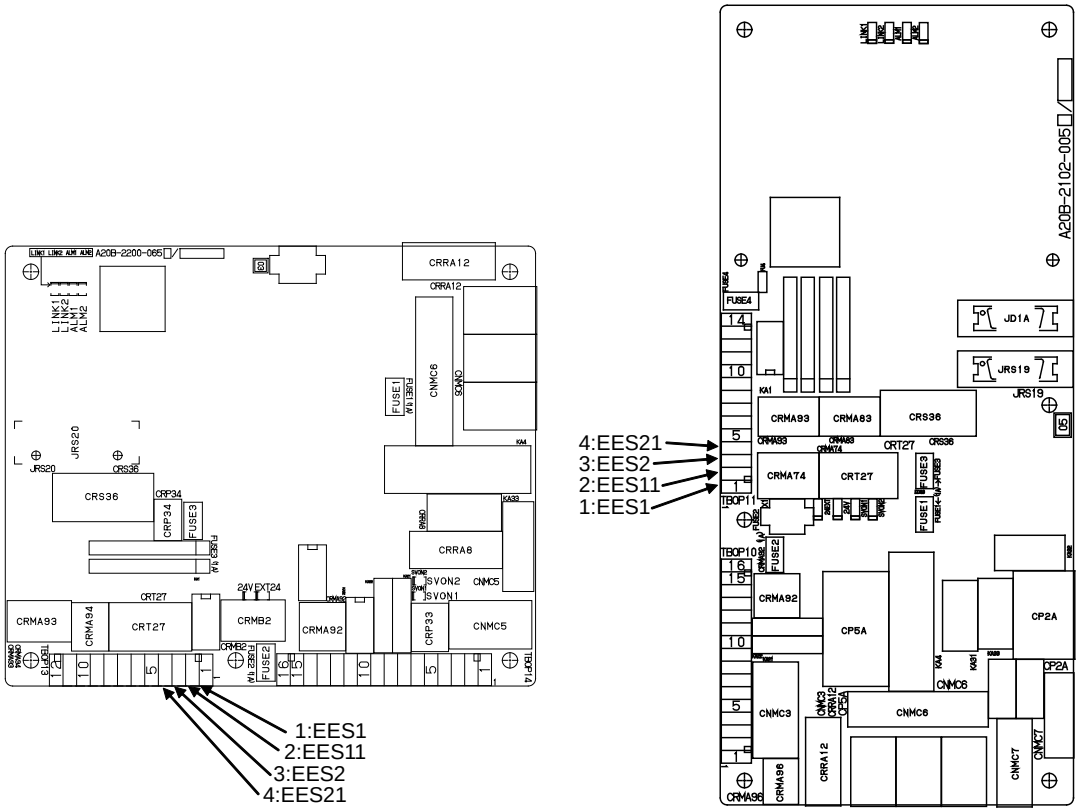

(Emergency stop board/A-cabinet) **(Emergency stop board/B-cabinet)**

Fig.3.5 (ad) SRVO-270 EXEMG1 status abnormal
SRVO-271 EXEMG2 status abnormal

SRVO-274 NTED1 status abnormal
SRVO-275 NTED2 status abnormal

(Explanation) A chain alarm was detected with the NTED signal.

(Action 1) This alarm may be issued when the enabling device (the deadman switch) is not pressed to a proper position or is operated very slowly. In such a case, release the enabling device (the deadman switch) once completely then press the enabling device (the deadman switch) again.

- When the NTED signal is not used, skip Action 2 and 3 and go to Action 4

(Action 2) Check whether the circuitry connected to the dual input signal (NTED) is faulty.

(Action 3) Check whether the timing of the dual input signal (NTED) satisfies the timing specification
(See Subsection 3.2.5, Fig 3.2.5(c) in CONNECTIONS).

(Action 4) Replace the emergency stop board.

(Action 5) Replace the teach pendant cable.

(Action 6) Replace the teach pendant.

(Action 7) Replace the mode switch on the operator's panel.

> ⚠ **WARNING**
> If this alarm is issued, do not reset the chain error alarm until the failure is identified and repaired. If robot use is continued with one of the duplicate circuits being faulty, safety may not be guaranteed when the other circuit fails.

> **NOTE**
> For the procedure of recovery from this alarm, see the descriptions of SRVO-230 and SRVO-231.

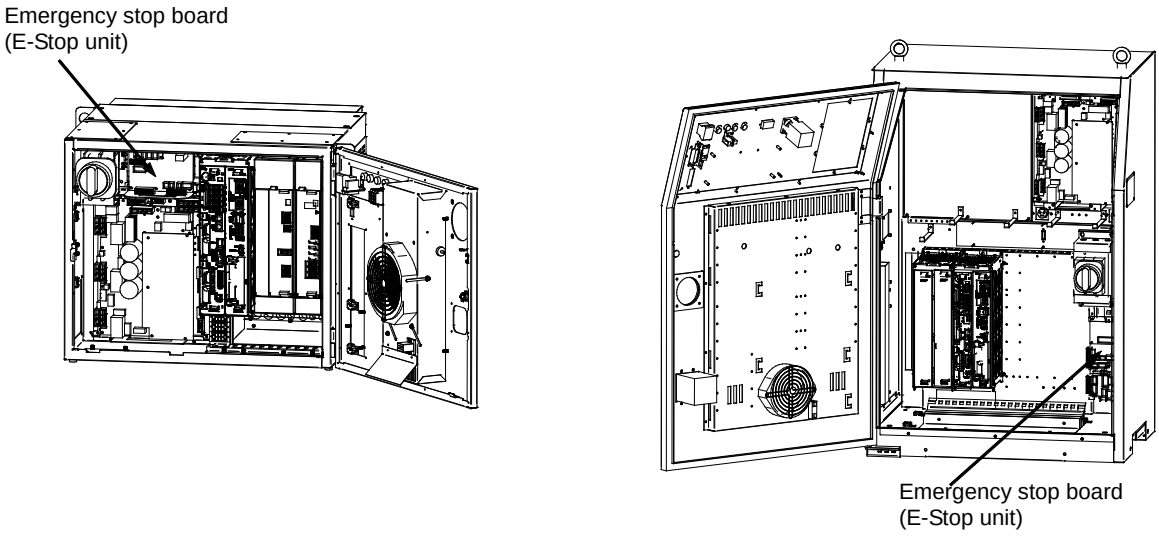

(A-cabinet) **(B-cabinet)**

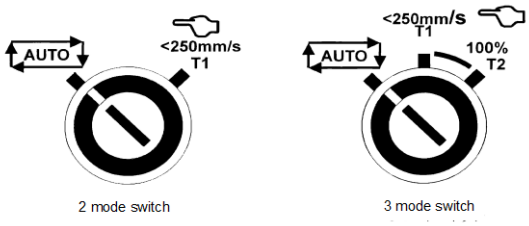

(Mode switch)

Fig.3.5 (ae) SRVO-274 NTED1 status abnormal
SRVO-275 NTED2 status abnormal

SRVO-277 Panel E-stop (SVEMG abnormal)

(Explanation) The emergency stop line was not disconnected although the emergency stop button on the operator's panel was pressed.
(Action 1) Replace the emergency stop board.
(Action 2) Replace the 6-Axis servo amplifier.

SRVO-278 TP E-stop (SVEMG abnormal)

(Explanation) The emergency stop line was not disconnected although the emergency stop button on the teach pendant was pressed.
(Action 1) Replace the teach pendant.
(Action 2) Replace the teach pendant cable.
(Action 3) Replace the emergency stop board.
(Action 4) Replace the 6-Axis servo amplifier.

NOTE
This alarm may be issued if the emergency stop button is pressed very slowly.

SRVO-280 SVOFF input

(Explanation) The external contact connected to EGS1-EGS11 or EGS2-EGS21 of the terminal block TBOP13(A-cabinet) or TBOP11(B-cabinet) on the emergency stop board is open.
(Action 1) If external circuitry is connected to EGS1-EGS11 or EGS2-EGS21 of the terminal block TBOP13(A-cabinet) or TBOP11(B-cabinet) on the emergency stop board, check the external circuitry.
(Action 2) If this signal is not used, make a connection between EGS1 and EGS11 and between EGS2 and EGS21 of the terminal block TBOP13(A-cabinet) or TBOP11(B-cabinet) on the emergency stop board.
(Action 3) Replace the emergency stop board.

⚠ **WARNING**
In a system using the SVOFF signal, it is very dangerous to disable the signal when a connection is made between EGS1 and EGS11 and between EGS2 and EGS21 of TBOP13(A-cabinet) or TBOP11(B-cabinet). Never make such an attempt. If a temporary short-circuit is needed for operation, separate safety measures must be taken.

SRVO-281 SVOFF input (SVEMG abnormal)

(Explanation) The emergency stop line was not disconnected although the contact connected between EGS1 and EGS11 or between EGS2 and EGS21 of the terminal block TBOP13(A-cabinet) or TBOP11(B-cabinet) on the emergency stop board was open. The emergency stop circuit is faulty.
(Action 1) Check the switch and cable connected to EGS1-EGS11and EGS2-EGS21 of the terminal block TBOP13(A-cabinet) or TBOP11(B-cabinet) on the emergency stop board. If the cable is abnormal, replace it.
(Action 2) Replace the emergency stop board.
(Action 3) Replace the 6-Axis servo amplifier.

SRVO-290 DC link HC alarm (G:i A:j)

(Explanation) The DC link current of the servo amplifier is abnormal
(Action) Take the same actions as for SRVO-045.

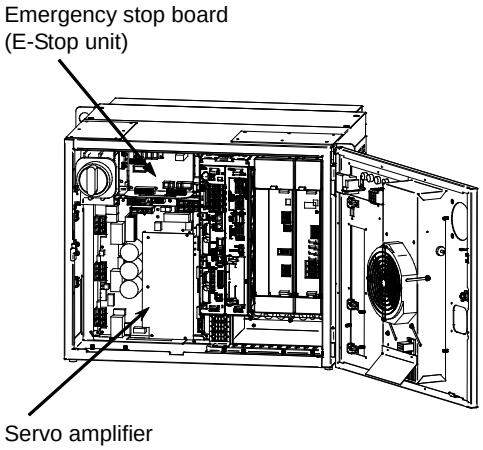

(A-cabinet)

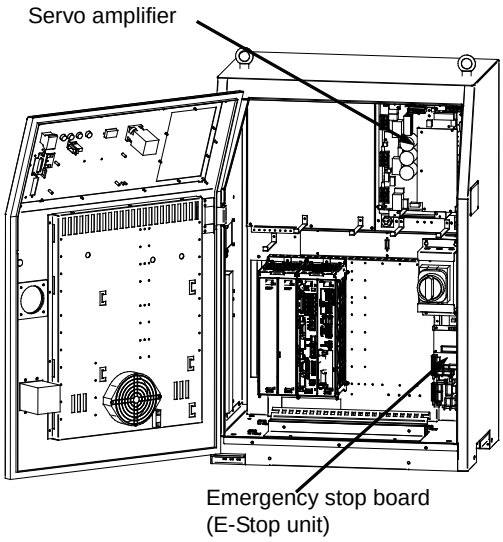

(B-cabinet)

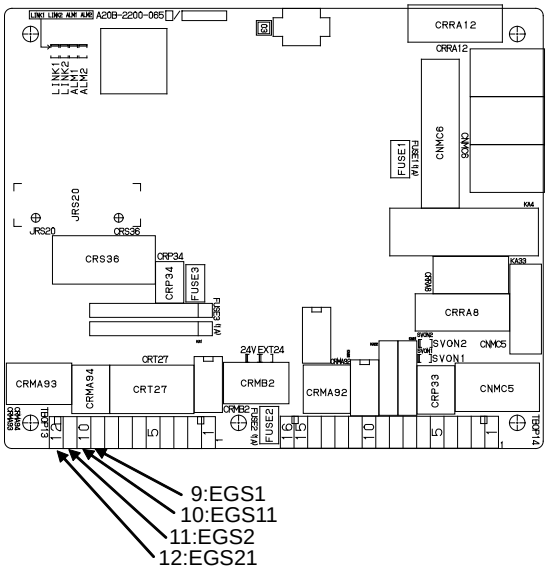

(Emergency stop board/A-cabinet)

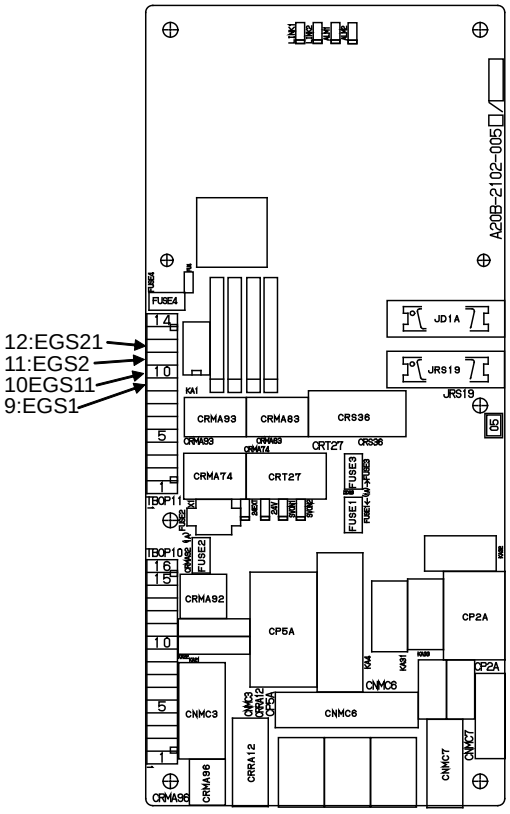

(Emergency stop board/B-cabinet)

Fig.3.5 (af) SRVO-277 Panel E-stop (SVEMG abnormal)
SRVO-278 TP E-stop (SVEMG abnormal)
SRVO-280 SVOFF input
SRVO-281 SVOFF input (SVEMG abnormal)

SRVO-291 IPM over heat (G:i A:j)

(Explanation) IPM on the servo amplifier is overheated.

(Action 1) Check whether the fan for cabinet ventilation is stopped and also check whether the vent hole is clogged. If necessary, clean or replace them.

(Action 2) If SRVO-291 is issued when the robot operating condition is severe, check the robot operating condition then relax the condition when possible.

(Action 3) If SRVO-291 is issued frequently, replace the servo amplifier.

In case of Auxiliary Axis Option

(Action 1) Check the operating conditions for the motor and relax the service conditions if it is possible.

(Action 2) Check whether the amplifier fan has stopped.

(Action 3) If this alarm is frequency issued, replace the servo amplifier.

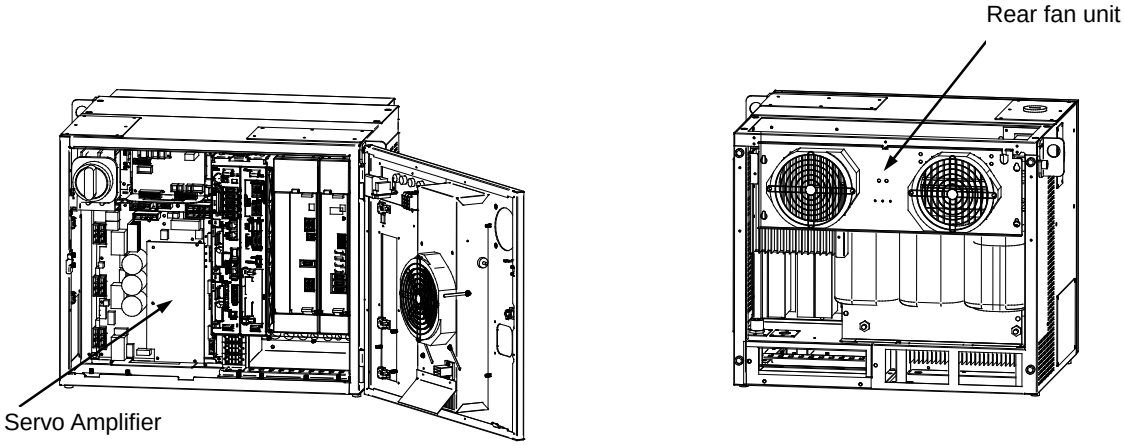

(A-cabinet)

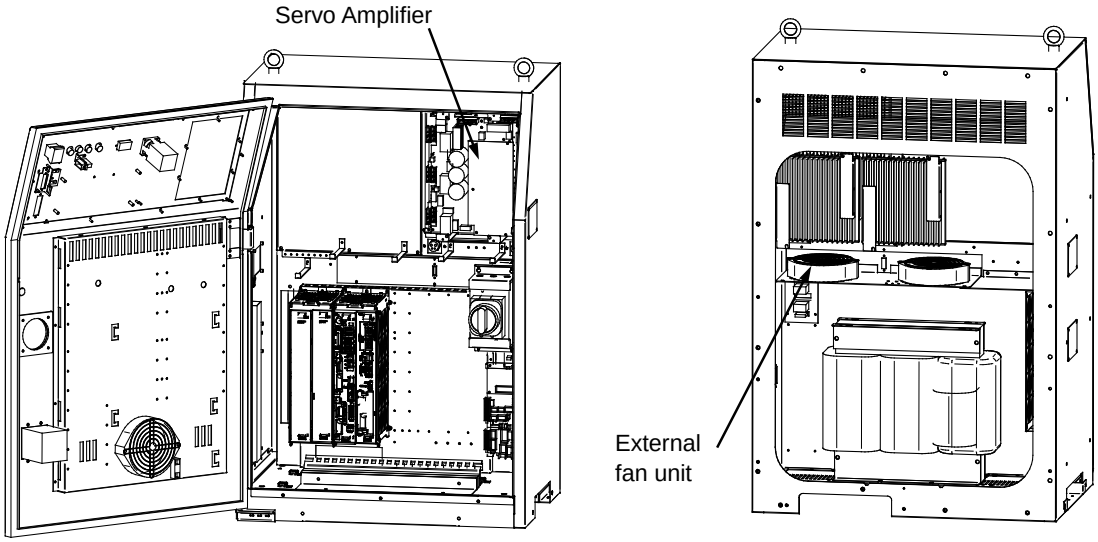

(B-cabinet)

Fig.3.5 (ag) SRVO-291 IPM over heat

SRVO-292 EXT.FAN alarm (G: i A: j)

(Explanation) The external fan of the auxiliary axis servo amplifier is faulty.
(Action 1) Check whether there is any foreign material in the fan.
(Action 2) Be sure to push the faceplate (control printed-circuit board) as far as it will go.
(Action 3) Check that the fan connector is attached correctly.
(Action 4) Replace the fan.
(Action 5) Replace the auxiliary servo amplifier that is indicated by the alarm message.

SRVO- 293 HCAL(PS) alarm (G: i A: j)

(Explanation) The Power Supply(α*i*PS) or the servo amplifier is faulty.
(Action 1) Replace the servo amplifier(6-axis amplifier,α*i*SV).
(Action 2) Replace the Power Supply(α*i*PS).

SRVO- 295 AMP com error (G: i A: j)

(Explanation) A communication error occurred in the 6-axis amplifier or between the Power Supply(α*i*PS) and the servo amplifier.
(Action 1) Replace the 6-axis amplifier.
(Action 2) Replace the cable for communication with the Power Supply(α*i*PS) and servo amplifier.
(Action 3) Replace the Power Supply(α*i*PS).
(Action 4) Replace the servo amplifier(α*i*SV).

SRVO- 297 Improper input power (G: i A: j)

(Explanation) The 6-axis servo amplifier or the power supply(α*i*PS) has detected the input voltage phase lack.
(Action 1) Check the input voltage of the controller whether phase is not lack.
(Action 2) Make sure that the 6-axis servo amplifier CRRA12 and emergency stop board CRRA12 connector are connected tightly. If the power supply(α*i*PS) is installed, make sure that the power supply(α*i*PS) CRRA12 connector is connected tightly.
(Action 3) Measure the secondary voltage between each phase at the main breaker, if phase loss is detected, replace the main breaker.
(Action 4) Measure the secondary voltage between each phase at the transformer, if phase loss is detected, replace the transformer.
(Action 5) Replace the E-stop unit.
(Action 6) Replace the 6-axis servo amplifier.
(Action 7) Replace the power supply(α*i*PS).

SRVO-300 Hand broken/HBK disabled
SRVO-302 Set Hand broken to ENABLE

(Explanation) Although HBK was disabled, the HBK signal was input.
(Action 1) Press RESET on the teach pendant to release the alarm.
(Action 2) Check whether the hand broken signal is connected to the robot. When the hand broken signal circuit is connected, enable hand broken.
(See Subsection 5.5.3 in CONNECTIONS)

SRVO-335 DCS OFFCHK alarm a, b

(Explanation) A failure was detected in the safety signal input circuit.
(Action 1) Replace the emergency stop board.
(Action 2) In case of B-cabinet, replace the optional safety I/O board.

SRVO-348 DCS MCC OFF alarm a, b

(Explanation) A command was issued to turn off the magnetic contactor, but the magnetic contactor was not turned off.

(Action 1) This action is applicable to the B-Cabinet only.
If a signal is connected to the E-stop unit CRMA74, check whether there is a problem in the connection destination.

(Action 2) This action is applicable to the B-Cabinet only.
Check the FUSE4 on emergency stop board. If the fuse is blown, see Article 3.6.(3) .

(Action 3) This action is applicable to the A-cabinet and B-cabinet.
Replace the E-stop unit (including the magnetic contactor).

(Action 4) This action is applicable to the A-cabinet and B-cabinet.
Replace the 6-Axis servo amplifier.

SRVO-349 DCS MCC ON alarm a, b

(Explanation) A command was issued to turn on the magnetic contactor, but the magnetic contactor was not turned on.

(Action 1) Replace the E-stop unit (including the magnetic contactor).

(Action 2) Replace the 6-Axis servo amplifier.

SRVO-370 SVON1 status abnormal
SRVO-371 SVON2 status abnormal

(Explanation) A chain alarm was detected with the emergency stop board internal signal (SVON).

(Action) Replace the emergency stop board.

> ⚠ **WARNING**
> If this alarm is issued, do not reset the chain error alarm until the failure is identified and repaired. If robot use is continued with one of the duplicate circuits being faulty, safety may not be guaranteed when the other circuit fails.

> **NOTE**
> For the procedure of recovery from this alarm, see the descriptions of SRVO-230 and SRVO-231.

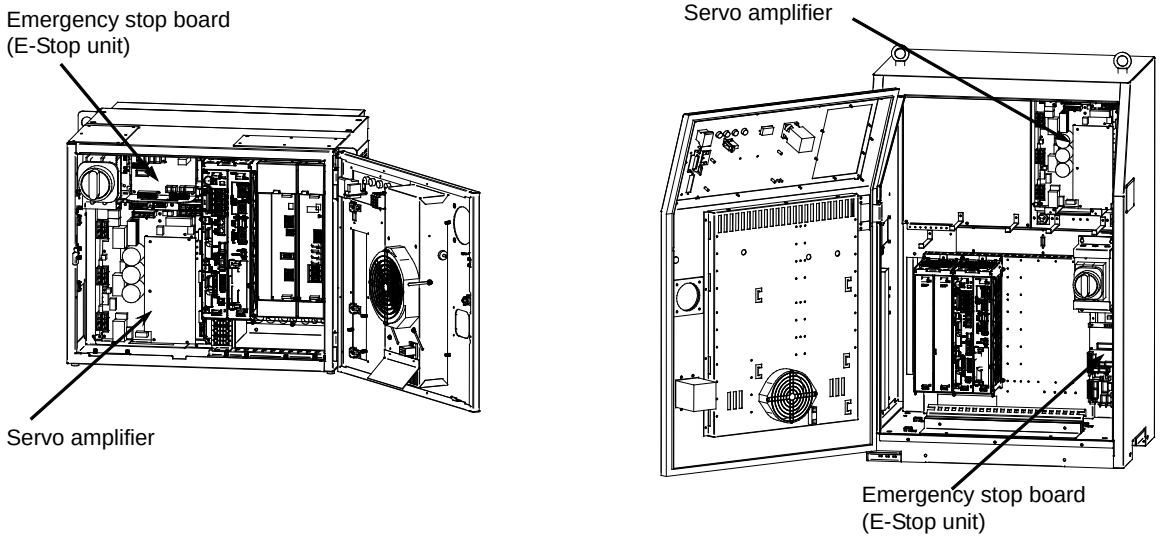

(A-cabinet) **(B-cabinet)**

Fig.3.5 (ah) SRVO-335 DCS OFFCHK alarm a, b
SRVO-348 DCS MCC OFF alarm a, b
SRVO-349 DCS MCC ON alarm a, b
SRVO-370 SVON1 status abnormal
SRVO-371 SVON2 status abnormal

SRVO-372 OPEMG1 status abnormal
SRVO-373 OPEMG2 status abnormal

(Explanation) A chain alarm was detected with the emergency stop button on the operator's panel.
(Action 1) Replace the emergency stop board.
(Action 2) Replace the teach pendant cable.
(Action 3) Replace the teach pendant.
(Action 4) Replace the emergency stop button on the operator's panel.

> ⚠ **WARNING**
> If this alarm is issued, do not reset the chain error alarm until the failure is identified and repaired. If robot use is continued with one of the duplicate circuits being faulty, safety may not be guaranteed when the other circuit fails.

> **NOTE**
> For the procedure of recovery from this alarm, see the descriptions of SRVO-230 and SRVO-231.

SRVO-374 MODE11 status abnormal
SRVO-375 MODE12 status abnormal
SRVO-376 MODE21 status abnormal
SRVO-377 MODE22 status abnormal

(Explanation) A chain alarm was detected with the mode switch signal.
(Action 1) Check the mode switch and its cable. Replace them if a defect is found.
(Action 2) Replace the emergency stop board.

> ⚠ **WARNING**
> If this alarm is issued, do not reset the chain error alarm until the failure is identified and repaired. If robot use is continued with one of the duplicate circuits being faulty, safety may not be guaranteed when the other circuit fails.

> **NOTE**
> For the procedure of recovery from this alarm, see the descriptions of SRVO-230 and SRVO-231.

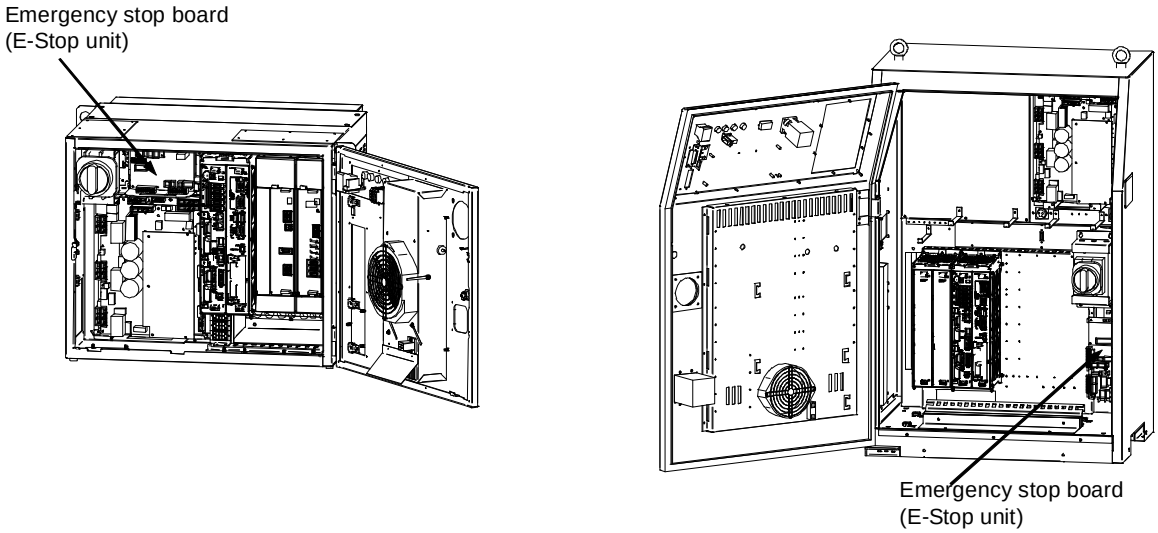

(A-cabinet) **(B-cabinet)**

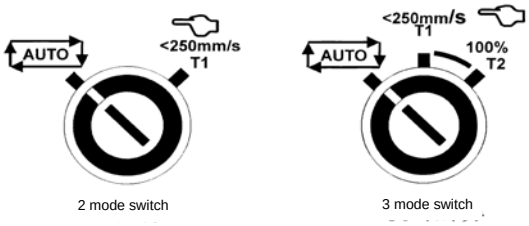

(Mode switch)

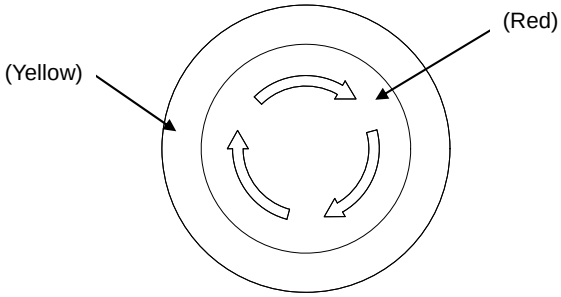

(Emergency stop button)

Fig.3.5 (ai) SRVO-372 OPEMG1 status abnormal
SRVO-373 OPEMG2 status abnormal
SRVO-374 MODE11 status abnormal
SRVO-375 MODE12 status abnormal
SRVO-376 MODE21 status abnormal
SRVO-377 MODE22 status abnormal

SRVO-378 SFDIxx status abnormal

(Explanation) A chain alarm was detected with the SFDI signal. xx shows signal name.
(Action 1) Check whether the circuitry connected to the dual input signal (SFDI) is faulty.
(Action 2) Check whether the timing of the dual input signal (SFDI) satisfies the timing specification. (See Subsection 3.3.5, Fig 3.3.5(c) in CONNECTIONS).
(Action 3) In case of B-cabinet, replace the optional safety I/O board.
(Action 4) Replace the emergency stop board.

> ⚠ **WARNING**
> If this alarm is issued, do not reset the chain error alarm until the failure is identified and repaired. If robot use is continued with one of the duplicate circuits being faulty, safety may not be guaranteed when the other circuit fails.

> **NOTE**
> For the procedure of recovery from this alarm, see the descriptions of SRVO-230 and SRVO-231.

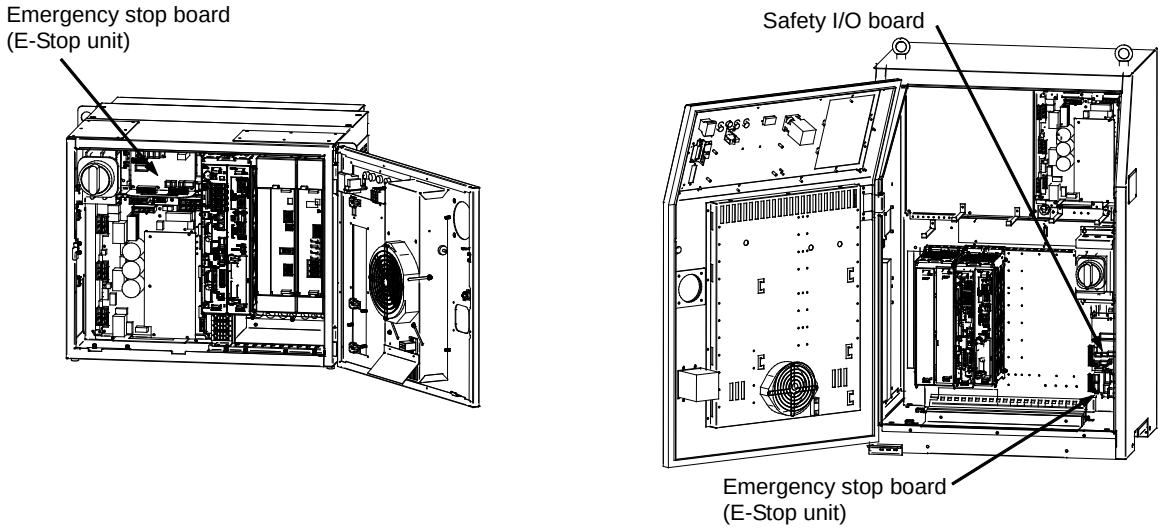

(A-cabinet) **(B-cabinet)**

Fig.3.5 (aj) SRVO-378 SFDIxx status abnormal

SRVO-450 Drvoff circuit fail (G: i A: j)

(Explanation) The two drive off inputs are not in the same status.

(Action 1) Check whether the two drive off inputs are correct.
(Action 2) Make sure that the connector CRMB16 (6-axis amplifier) is securely attached to the servo amplifier.
(Action 3) Replace the servo amplifier(6-axis servo amplifier,α*i*SV).

SRVO-451 Internal S-BUS fail (G: i A: j)

(Explanation) An error is found in the serial bus communication in the servo amplifier.

(Action 1) Replace the servo amplifier(6-axis servo amplifier,α*i*SV).

SRVO-452 ROM data failure (G: i A: j)

(Explanation) An error is found in the ROM data in the servo amplifier.
(Action 1) Replace the servo amplifier(6-axis servo amplifier,α*i*SV).

SRVO-453 Low volt driver (G: i A: j)

(Explanation) Driver supply voltage in the servo amplifier has declined.
(Action 1) Replace the servo amplifier(6-axis servo amplifier,α*i*SV).

SRVO-454 CPU BUS failure (G: i A: j)

(Explanation) An error was found in CPU bus data in the amplifier.
(Action 1) Replace the servo amplifier(6-axis servo amplifier,α*i*SV).

SRVO-455 CPU watch dog (G: i A: j)

(Explanation) An error occurred in CPU operation in the amplifier.
(Action 1) Replace the servo amplifier(6-axis servo amplifier,α*i*SV).

SRVO-456 Ground fault (G: i A: j)

(Explanation) An error is found in the motor current detection data in the servo amplifier.
(Action 1) Replace the servo amplifier(6-axis servo amplifier,α*i*SV).

SRVO-457 Ground fault(PS) (G: i A: j)

(Explanation) Ground fault of motor power line was detected by Power Supply(α*i*PS).
(Action 1) Check whether the motor or the motor power cable is connecting to ground.
(Action 2) Replace the Power Supply(α*i*PS).
(Action 3) Replace the servo amplifier(6-axis servo amplifier, α*i*SV).

SRVO-458 Soft thermal(PS) (G: i A: j)

(Explanation) The root-mean-square current value which is calculated internally by the Power Supply (α*i*PS) exceeds the maximum permissible value.
This alarm is issued to protect the Power Supply (α*i*PS) from damage of thermal destruction due to the output current.
Probable causes:
1. Overload
2. External force to the robot
3. Disconnection of the brake cable
4. Insufficient torque by low voltage of input power supply
5. Brake failure (including mis-setting of brake number for auxiliary axis)
6. Aux. axis brake unit failure for aux. axis
7. Power Supply(α*i*PS) failure
8. Servo amplifier failure

(Action 1) Check whether the duty and applied load exceed the rating. If so, reduce the duty or applied load.
(Action 2) Check whether the robot is pushed or pulled by external force. If so, remove the external force to the robot or modify the taught point.
(Action 3) Check whether the brake cable/connector are connected correctly.
(Action 4) Measure the supplied voltage. Then, check whether the input voltage of the controller is within the rating.
(Action 5) Check whether the motor brake of the corresponding axis is released properly when Reset or the robot moves. First of all, check whether the setting of brake number is correct when this alarm occurs on auxiliary axis.
(Action 6) When this alarm occurs on the auxiliary axis which brake is controlled by the aux. brake unit, check the fuse on the aux. brake unit.
(Action 7) Replace the Power Supply(α*i*PS).
(Action 8) Replace the servo amplifier (6-axis servo amplifier, α*i*SV).

SRVO-459 Excess regeneration2%s (G: i A: j)

(Explanation) An error is found in the discharge circuit in the 6-axis servo amplifier.

(Action 1) Replace the 6-axis servo amplifier.

SRVO-460 Illegal parameter%s (G: i A: j)

(Explanation) An error is found in the setting of the parameters in the Power Supply(α*i*PS) or 6-axis servo amplifier.

(Action 1) Replace the Power Supply(α*i*PS).

(Action 2) Replace the 6-axis servo amplifier.

SRVO-461 Hardware error%s (G: i A: j)

(Explanation) An error is found in the internal circuit in the Power Supply(α*i*PS) or 6-axis amplifier.

(Action 1) Replace the Power Supply(α*i*PS).

(Action 2) Replace the 6-axis servo amplifier.

SRVO-476 CLLB alarm %x,%x

(Explanation) Internal error of the collaborative robot function.

(Action 1) Restart the controller. If the error is not cleared, execute Diagnostic log function [FNCT menu / Diagnostic log] before you do other operation such as power off or jogging, and get the image backup. And contact your FANUC technical representative. If you cannot execute Diagnostic log function, document the events that led to the error and get the image backup. And contact your FANUC representative.

SRVO-477 Calibration data error

(Explanation) The sensor calibration data of the collaborative robot are wrong.

(Action 1) Copy "CLLB.CM" file from the CD-R which is appendix of the collaborative robot to a memory card or USB memory. Perform the same file with a teach pendant, set the sensor calibration parameter. After this change, perform “APPLY TO DCS PARAMETER”. Refer to “1.3 Apply to DCS parameter” in ”Dual Check Safety Function Operator’s manual” (B-83184EN) for detail.
As this file is unique to each collaborative robot, do not use other robot’s file. Check that the serial number which is printed on CD-R is same as the number which is written on collaborative robot sensor.

SRVO-478 Temperature difference too large

(Explanation) The force sensor temperature difference is too large.

(Action 1) Please make sure that the environment temperature does not change greatly, and then restart the controller.
If the alarm is not cleared, document the events that led to the error and contact your FANUC technical representative.

SRVO-479 Temperature changes too fast

(Explanation) The force sensor temperature changes too fast.

(Action 1) Please make sure that the environment temperature does not change greatly, and then restart the controller.
If the alarm is not cleared, document the events that led to the error and contact your FANUC technical representative.

SRVO-480 FORCE alarm %x, %x

(Explanation) Force sensor is abnormal.
(Action 1) Restart the controller.
(Action 2) Replace the force sensor cable.
If the alarm is not cleared, document the events that led to the error and contact your FANUC technical representative.

SRVO-486 Hand Guidance E-stop

(Explanation) The EMERGENCY STOP button on the Hand Guidance device was pressed.
(Action 1) Release EMERGENCY STOP on the Hand Guidance device, then press the [RESET] key.
(Action 2) Check setting and connection to Safety I/O board.

SRVO-487 Hand Guidance Deadman switch

(Explanation) The enabling switch (deadman switch) on the Hand Guidance device was released.
(Action 1) Grip the enabling switch (deadman switch), then press the [RESET] key.
(Action 2) Enable Contact stop, when Collaborative robot is used..
(Action 3) Set Hand Guidance disable I/O to ON if you do not use Hand Guidance function.

SRVO-490 FORCE alarm 2 %x, %x

(Explanation) Force sensor error.
(Action 1) Restart the controller.
(Action 2) Replace the force sensor cable.
If the alarm is not cleared, document the events that led to the error and contact your FANUC technical representative.

3.6 FUSE-BASED TROUBLESHOOTING

This section describes the alarms and symptoms generated and actions required when the fuses installed on the printed circuit boards and units have blown.

(1) When the fuses of the power supply unit have blown
F1: Fuse for AC input (A60L-0001-0450#8R0)
F2: Fuse for AC input (A60L-0001-0245#GP75)
F3: Fuse for +24 E (A60L-0001-0046#7.5)
F4: Fuse for +24 V (A60L-0001-0046#7.5)

Name	Symptom observed when fuse has blown	Action
F1	The LED (PIL: Green) of the power supply unit does not light, and the power cannot be turned on.	1 Check the units (fans), printed-circuit board and cables connected to the CP2 and CP3 connectors of the power supply unit to see if there is any short circuit. 2 Replace the power supply unit.
F2	Only for AC reactor. The LED (PIL: Green) of the power supply unit does not light, and the power cannot be turned on.	1 Check the units (fans), printed-circuit board and cables connected to the CP2 and CP3 connectors of the power supply unit to see if there is any short circuit. 2 Replace the power supply unit.
F3	The teach pendant displays “SRVO-217 E-STOP Board not found” or “PRIO-091 E-Stop PCB comm. Error ”	1 Check the printed circuit boards, units, servo amplifier and cables using +24 E according to the power supply system diagram. Replace a faulty printed circuit board, unit, servo amplifier or cable if any. 2 Replace the power supply unit.
F4	The power, when turned on, is immediately turned off. At this time, the LED (ALM: Red) on the power supply unit lights.	1 Check the printed circuit boards, units, servo amplifier and cables using +24 V according to the power supply system diagram. Replace a faulty printed circuit board, unit, servo amplifier or cable if any. The LED of ALM is turned off by pressing the OFF button once. 2 Replace the power supply unit.

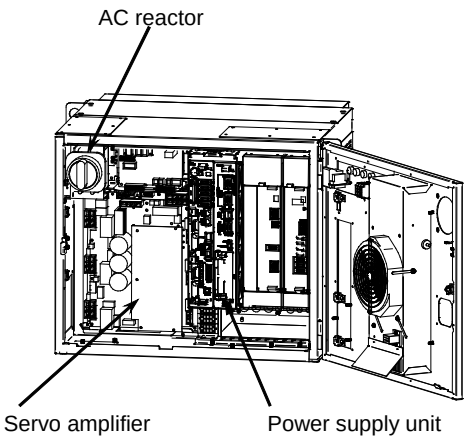

(A-cabinet)

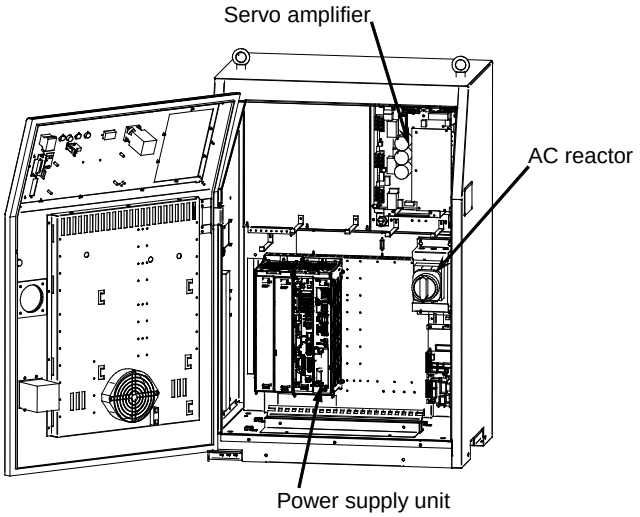

(B-cabinet)

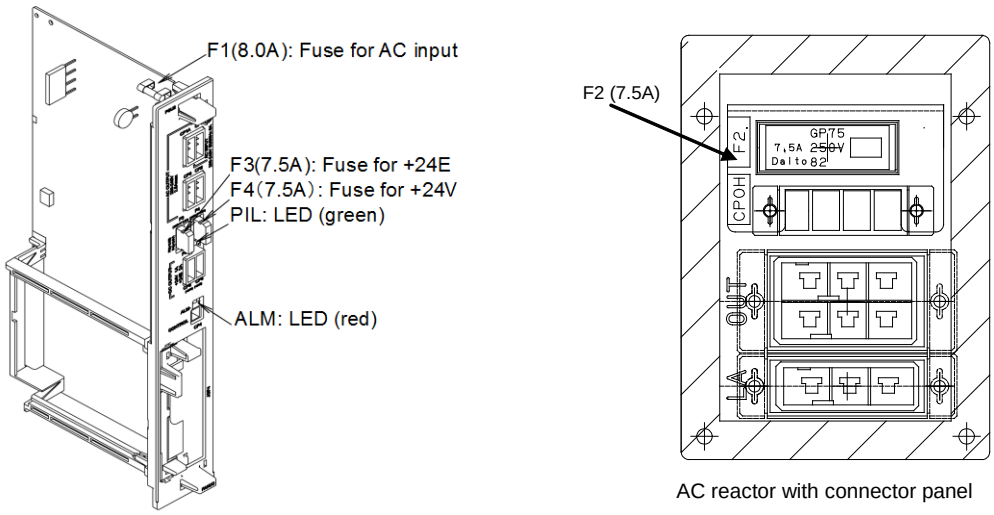

Fig.3.6(a) Fuse on the Power supply unit or AC reactor

(2) Main board fuse (R-30*i*B Plus)
FU1:For protecting the +24E output for vision
(This fuse is installed on the R-30*i*B Plus main board.)

Name	Symptom observed when fuse has blown	Action
FU1	+24E used for vision is not output.	1 Check +24E used by the vision for a ground fault. 2 Check the cables connecting to the vision camera and the related parts for an abnormaly. 3 Replace the main board.

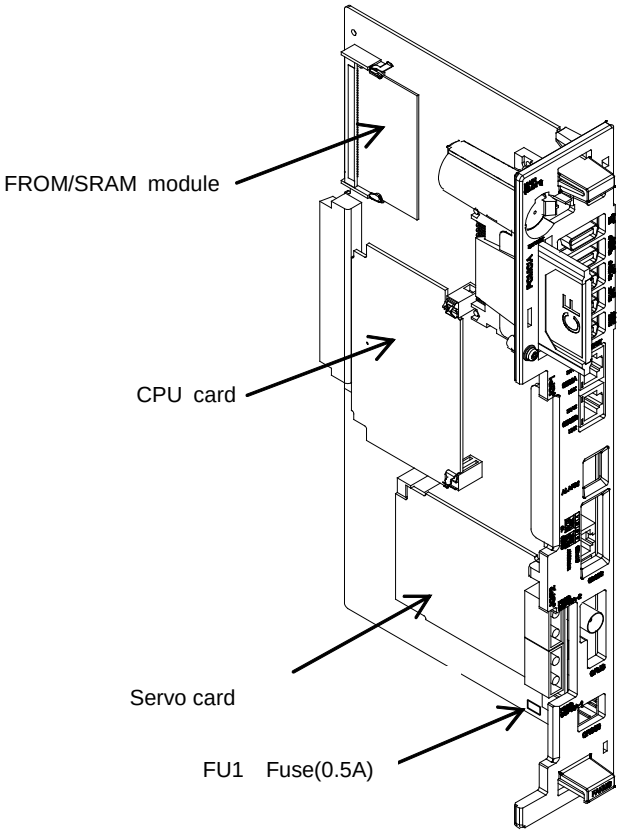

Fig.3.6(b) R-30*i*B Plus Main board fuse

(3) 6-axis servo amplifier fuse

FS1: For generation of the power to the amplifier control circuit (A60L-0001-0290#LM32C)
FS2: For protection of the 24V output to the end effector, XROT, and XHBK (A60L-0001-0290#LM32C)
FS3: For protection of the 24V output to the regenerative resister (A60L-0001-0290#LM32C)

Name	Symptom observed when fuse has blown	Action
FS1	All LEDs on the servo amplifier go out. The FSSB disconnection (SRVO-057) or initialization (SRVO-058) alarm is displayed on the teach pendant.	Replace the 6-axis servo amplifier.
FS2	The 6ch amplifier fuse blown (SRVO-214), Hand broken (SRVO-006), and Robot overtravel (SRVO-005) are displayed on the teach pendant.	1 Check +24VF used by the end effector for a ground fault. 2 Check the robot connection cable and the robot's internal cable. 3 Replace the 6-axis servo amplifier. 4 In case of M-3*i*A, check the fan motor inside the robot (option).
FS3	The 6ch amplifier fuse blown (SRVO-214), DCAL alarm (SRVO-043) are displayed on the teach pendant.	1 Check the regenerative resister, and replace it if required. 2 Replace the 6-axis servo amplifier.

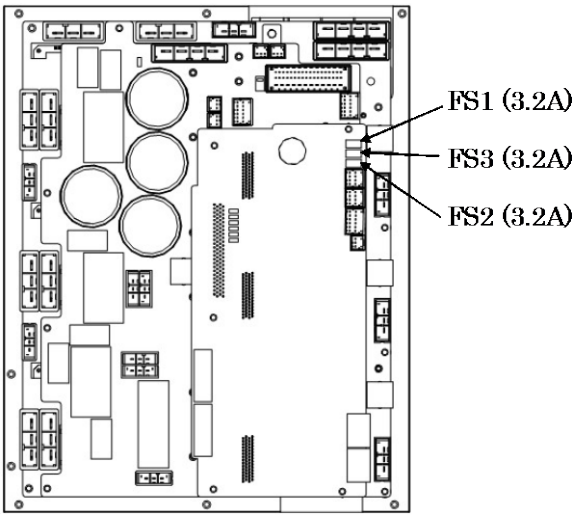

Fig.3.6(c) Fuse on the servo amplifier

(4) Emergency stop board fuses

FUSE1: For internal power supply circuit protection (A60L-0001-0290#LM10C)
FUSE2: For +24EXT line (emergency stop line) protection (A60L-0001-0290#LM10C)
FUSE3: For teach pendant power supply circuit protection (A60L-0001-0290#LM10C)
FUSE4: For SFDI protection (B-cabinet only) (A60L-0001-0290#LM10C)

Name	Symptom observed when fuse has blown	Action
FUSE1	The teach pendant displays "SRVO-217 E-STOP Board not found" or "PRIO-091 E-Stop PCB comm. Error ".	1 Check the cable between emergency stop board and main board. Replace them if necessary. 2 Replace the E-STOP unit. Before executing the (Action 3), perform a complete controller backup to save all your programs and settings. 3 Replace the main board.

Name	Symptom observed when fuse has blown	Action
FUSE2	The teach pendant displays “SRVO-213 E-STOP Board FUSE2 blown”	1 If an alarm is issued when the fuse has not blown, check the voltages of EXT24V and EXT0V (TBOP14 for A-cabinet or TBOP10 for B-cabinet). If EXT24V or INT0V is not used, check the jumper pin between EXT24V and INT24V or between EXT0V and INT0V. 2 If the FENCE, SVOFF, and EXEMG are used, these signals may be connected to 0V or ground. Check these cables. 3 Replace the operator’s panel cable(CRT27). 4 Replace the emergency stop board. 5 Replace the teach pendant cable. 6 Replace the teach pendant.
FUSE3	The display on the teach pendant disappears.	1 Check the teach pendant cable for a fault, and replace it if required. 2 Check the teach pendant for a fault, and replace it if required. 3 Replace the emergency stop board.
FUSE4	(B-cabinet only) The teach pendant displays “SRVO-348 DCS MCC OFF Alarm”	1 Check the SFDI cable connections, and replace it if required. 2 Check the operator’s panel cable (CRT27), and replace it if required. 3 Replace the E-STOP unit.

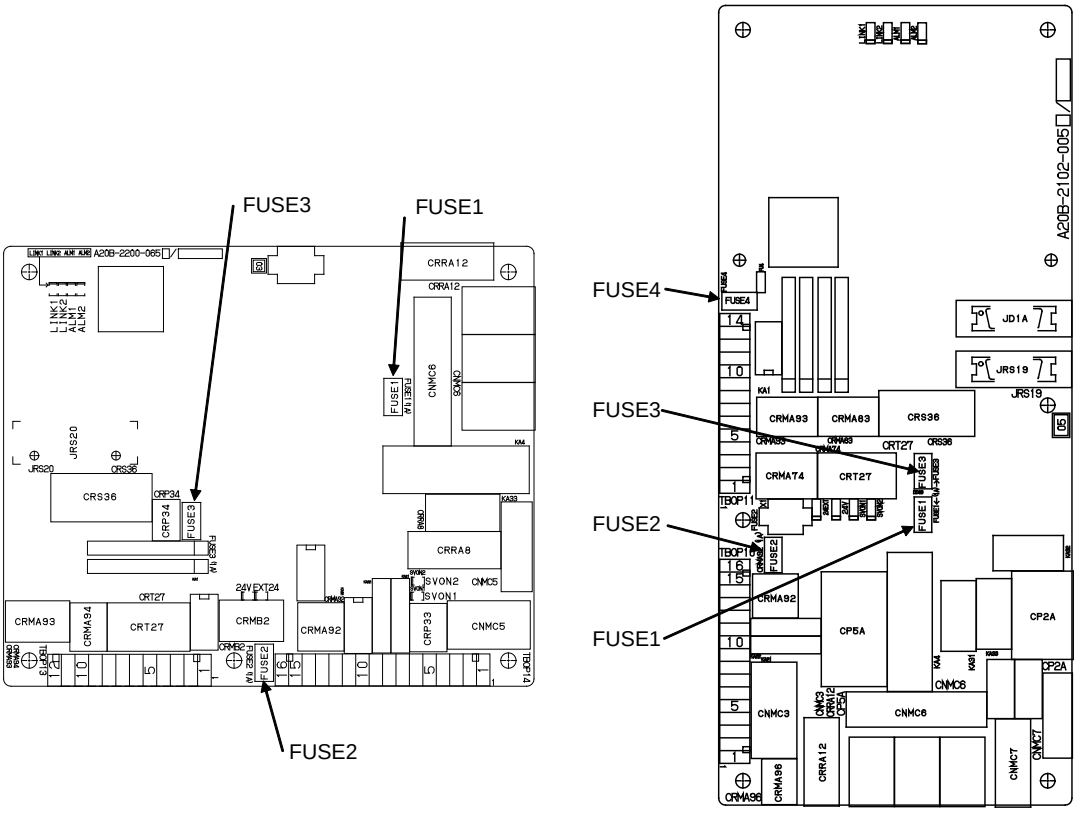

(A-cabinet) **(B-cabinet)**

Fig.3.6 (d) Fuse on the Emergency stop board

(5) Fuse on the process I/O board JA,JB
FUSE1: Fuse for +24E (A60L-0001-0046#2.0)

Name	Symptom observed when fuse has blown	Action
FUSE1	The LED (ALM-2 or FALM) on the process I/O board lights, and an alarm such as IMSTP input is output on the teach pendant. (The display data depends on state of peripheral devices connection.)	1 Check if the cables and peripheral equipment connected to the process I/O board are normal. 2 Replace the process I/O board.

Fuse location is common to JA and JB. The following is figure of process I/O board JA.

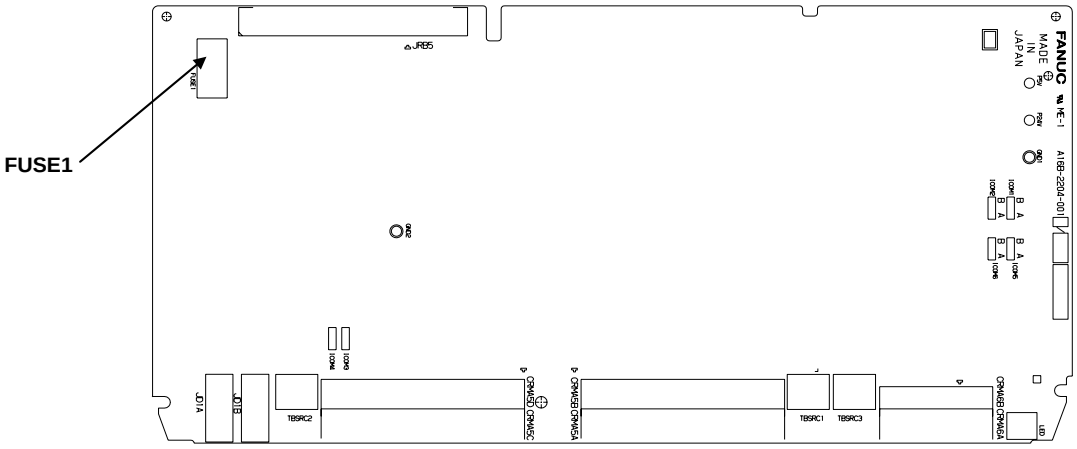

Fig.3.6 (e) Fuse on the process I/O board JA,JB

(6) Fuse on the process I/O board MA,MB
FUSE1: Fuse for +24E (A60L-0001-0046#1.0)

Name	Symptom observed when fuse has blown	Action
FUSE1	The LED (ALM1 or FALM) the process I/O board lights.	1. Check if the cables and peripheral devices connected to the process I/O board are normal. 2. Replace the process I/O board.

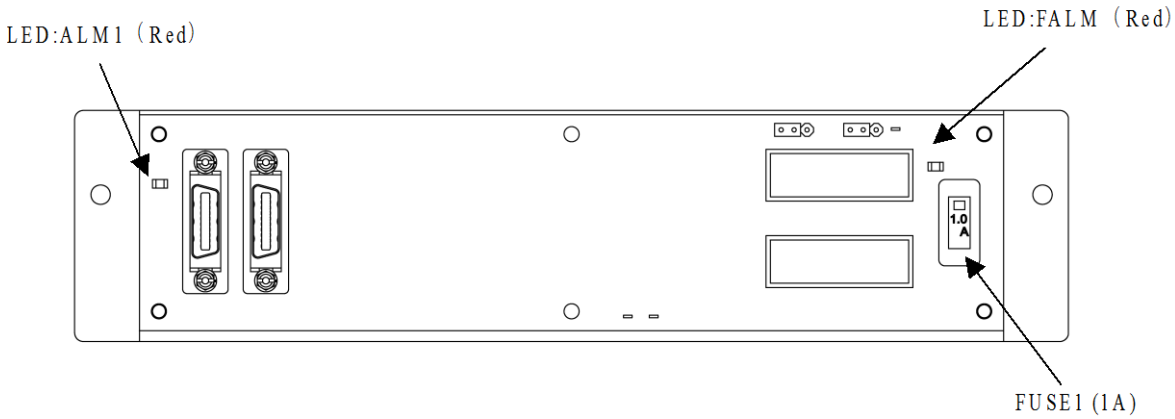

Fig.3.6 (f) Fuse on the process I/O board MA

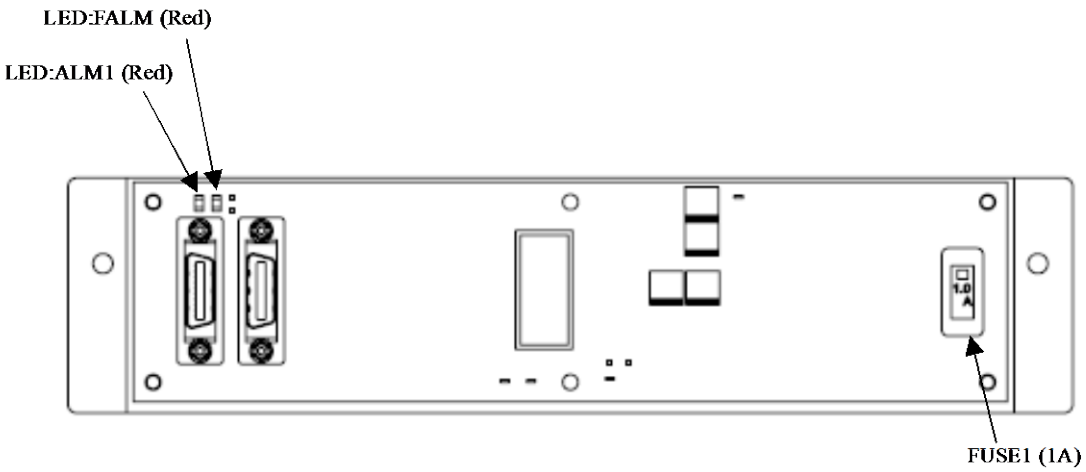

Fig.3.6 (g) Fuse on the process I/O board MB

(7) Safety I/O board fuses

FU1: For protecting +24V to the safety signal input (SFDI) (A60L-0001-0290#LM10C)

FU2: For protecting +24V to the safety signal output (SFDO) (A60L-0001-0290#LM32C)

Name	Symptom observed when fuse has blown	Action
FU1	An alarm “SRVO-219 Safety I/O board fuse1 blown” is displayed on the teach pendant.	1. Check whether there is ground-fault occurring at the connection cable of CRMA90, and replace it if necessary. 2. Replace the additional Safety I/O board.
FU2	An alarm “SRVO-219 Safety I/O board fuse2 blown” is displayed on the teach pendant.	1. Check whether there is ground-fault occurring at the connection cable of CRMA90, and replace it if necessary. 2. Replace the additional Safety I/O board.

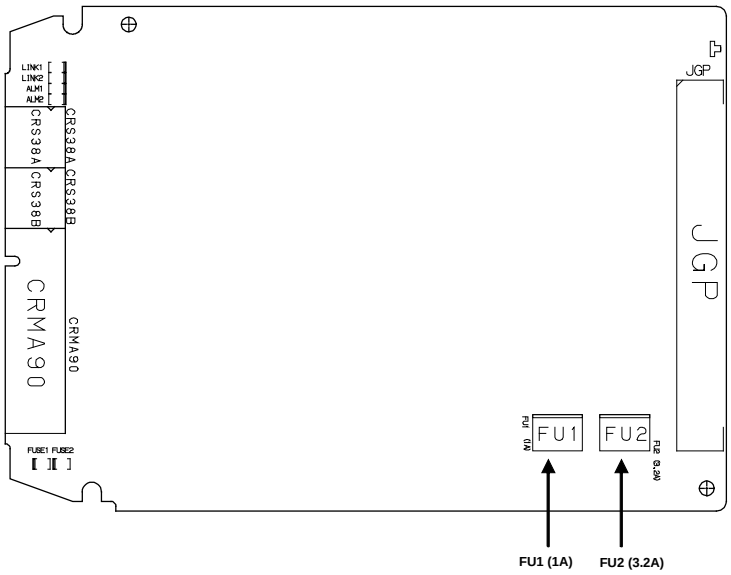

Fig.3.6 (h) Fuse on the safety I/O board

(8) Fuse on the sensor I/F unit for Collaborative Robot
FUSE: For internal power supply circuit (A60L-0001-0290#LM20)

Name	Symptom observed when fuse has blown	Action
FUSE	The LED of the sensor I/F unit lights.	1. Check if the cables and peripheral devices connected to the sensor I/F unit are normal. 2. Replace the sensor I/F unit.

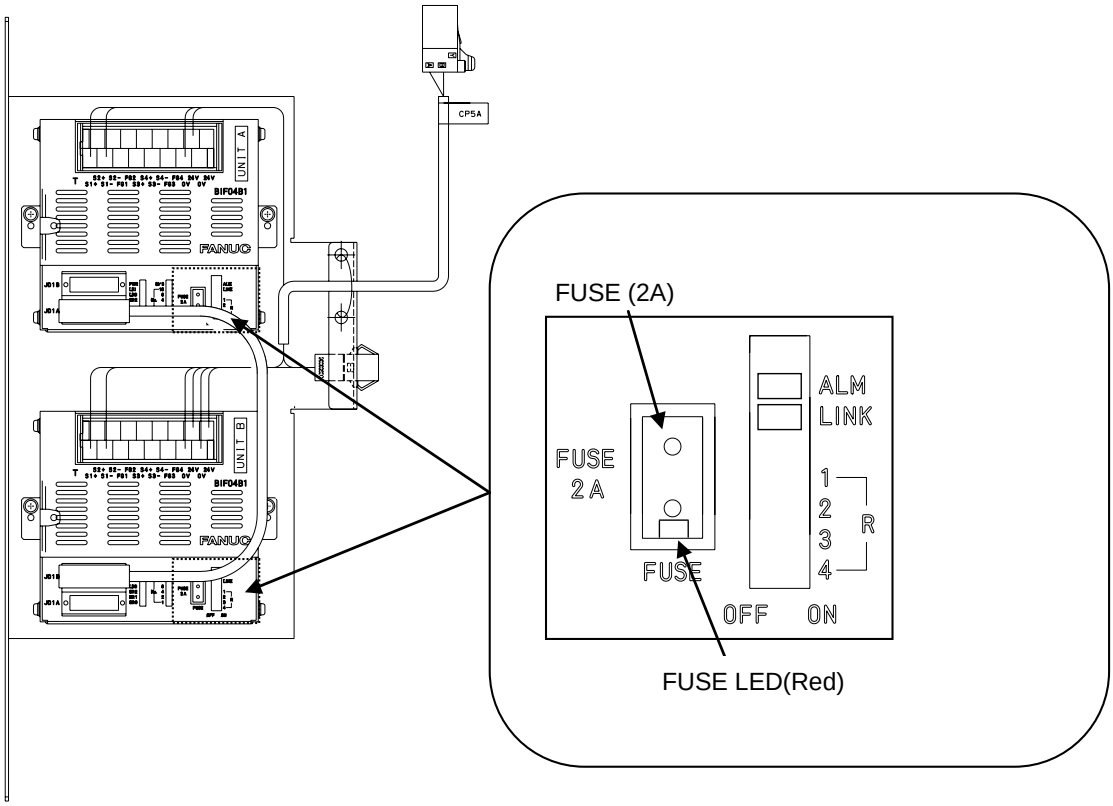

Fig.3.6 (i) Fuse on Sensor I/F unit for Collaborative Robot

3.7 TROUBLESHOOTING BASED ON LED INDICATIONS

The printed circuit boards and servo amplifier are provided with alarm LEDs and status LEDs. The LED status and corresponding troubleshooting procedures are described below.

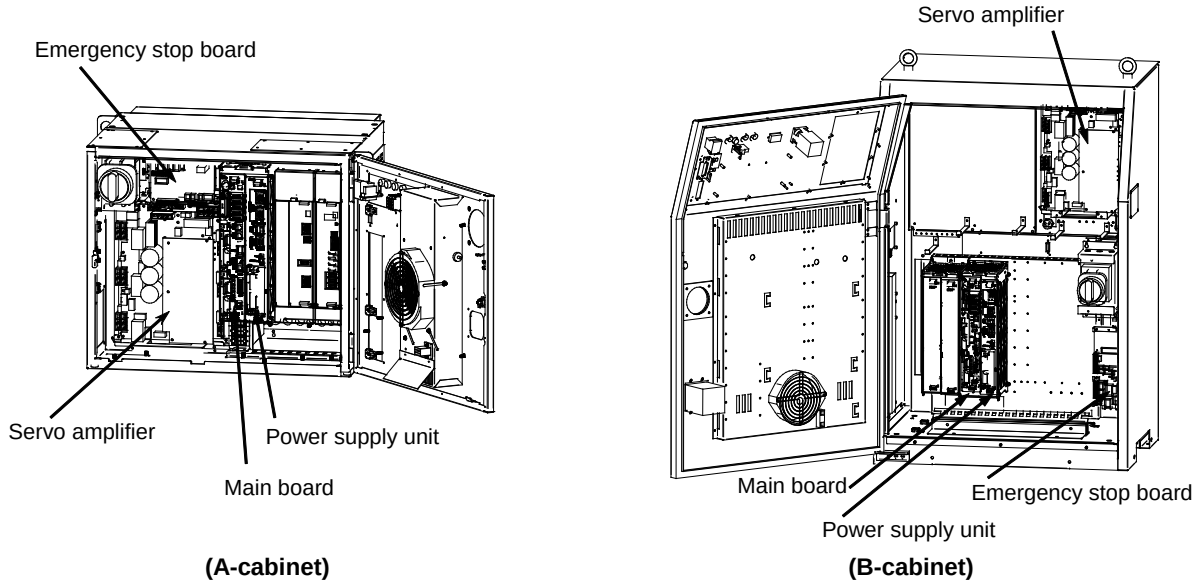

Fig.3.7(a) Troubleshooting based on LED indications

3.7.1 Troubleshooting Using the LEDS on the Main Board

(1) Troubleshooting using the status display LED

To troubleshoot an alarm that arises before the teach pendant is ready to display, check the status LEDs (green) on the main board at power-on. After power-on, the LEDs light as described in steps 1 to end, in the order described. If an alarm is detected, the step in which the alarm occurred can be determined from which LEDs are lit.

Step	LED	Action to be taken
1: After power-on, all LEDs are lit temporarily.	■ D1 ■ D2 ■ D3 ■ D4	[Action1] Replace the CPU card. * [Action2] Replace the main board.
2: Software operation start-up.	□ D1 □ D2 □ D3 □ D4	[Action1] Replace the CPU card. * [Action2] Replace the main board.
3: The initialization of dram on the CPU card is completed.	□ D1 □ D2 □ D3 ■ D4	[Action1] Replace the CPU card. * [Action2] Replace the main board.
4: The initialization of DPRAM on the communication IC is completed.	□ D1 □ D2 ■ D3 □ D4	[Action1] Replace the CPU card. * [Action2] Replace the main board. * [Action3] Replace the FROM/SRAM module.

Step	LED	Action to be taken
5: The initialization of the communication IC is completed.	D1 □ D2 □ D3 ■ D4 ■	[Action1] Replace the CPU card. * [Action2] Replace the main board. * [Action3] Replace the FROM/SRAM module.
6: The loading of the basic software is completed.	D1 □ D2 ■ D3 □ D4 □	* [Action1] Replace the main board. * [Action2] Replace the FROM/SRAM module.
7: Basic software start-up.	D1 □ D2 ■ D3 □ D4 ■	* [Action1] Replace the main board. * [Action2] Replace the FROM/SRAM module. * [Action3] Replace the power supply unit.
8: Start-up of communication with the teach pendant.	D1 □ D2 ■ D3 ■ D4 □	* [Action1] Replace the main board. [Action2] Replace the FROM/SRAM module.
9: The loading of optional software is completed.	D1 □ D2 ■ D3 ■ D4 ■	* [Action1] Replace the main board. [Action2] Replace the process I/O board.
10: DI/DO initialization	D1 ■ D2 □ D3 □ D4 □	[Action1] Replace the FROM/SRAM module. [Action2] Replace the main board.
11: The preparation of the SRAM module is completed.	D1 ■ D2 □ D3 □ D4 ■	[Action1] Replace the servo card. * [Action2] Replace the main board. [Action3] Replace the servo amplifier.
12: Servo card initialization	D1 ■ D2 □ D3 ■ D4 □	[Action1] Replace the servo card. * [Action2] Replace the main board. [Action3] Replace the servo amplifier.
13: Calibration is completed.	D1 ■ D2 □ D3 ■ D4 ■	[Action1] Replace the servo card. * [Action2] Replace the main board. [Action3] Replace the servo amplifier.
14: Start-up of power application for the servo system	D1 ■ D2 ■ D3 □ D4 □	* [Action1] Replace the main board.

Step	LED	Action to be taken
15: Program execution	D1 ■ D2 ■ D3 □ D4 ■	* [Action1] Replace the main board. [Action2] Replace the process I/O board.
16: DI/DO output start-up.	D1 ■ D2 ■ D3 ■ D4 □	* [Action1] Replace the main board.
17: Initialization is terminated.	D1 ■ D2 ■ D3 ■ D4 ■	Initialization has ended normally.
18: Normal status	D1 ☆ D2 ☆ D3 ■ D4 ■	Status LEDs 1 and 2 blink when the system is operating normally.

* If the main board or FROM/SRAM module is replaced, the contents of memory (parameters, specified data, etc.) will be lost. Before you replace the unit, therefore, be sure to make a backup copy of the data.
If an alarm is issued, it might be impossible to make a backup copy of data. So, back up the contents of memory routinely.

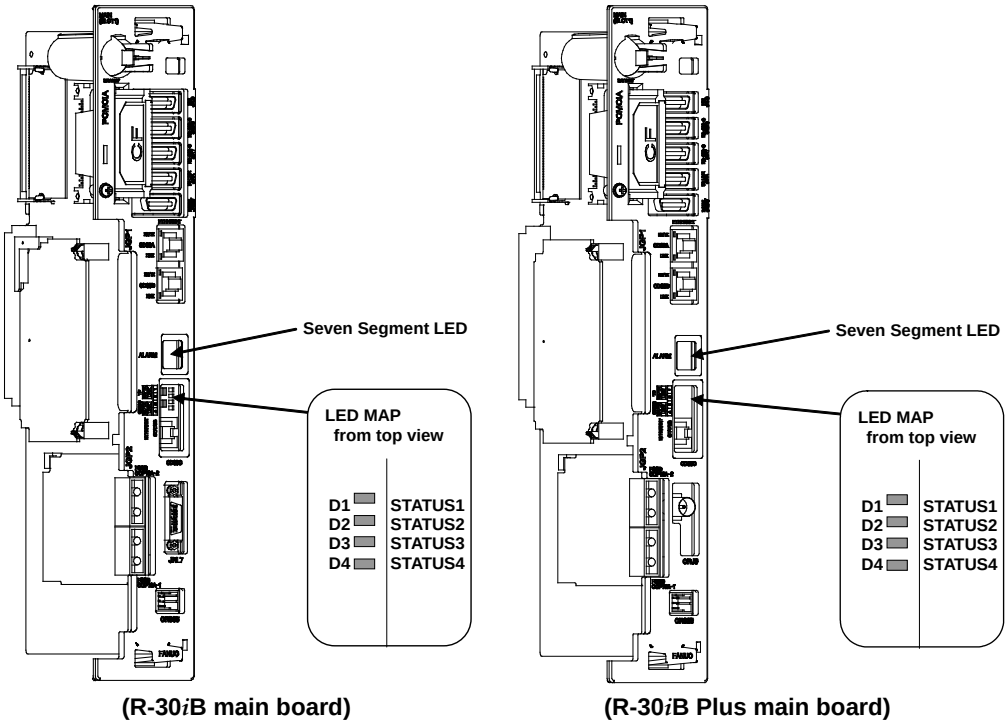

(R-30*i*B main board) **(R-30*i*B Plus main board)**

Fig.3.7.1(a) LED on the main board

(2) TROUBLESHOOTING BY 7-SEGMENT LED INDICATOR

7-segment LED indicator	Description
0.	[Description] A parity alarm condition has occurred in DRAM on the CPU card installed on the main board. [Action1] Replace the CPU card. * [Action2] Replace the main board.
1.	[Description] A parity alarm condition has occurred in SRAM on the FROM/SRAM module installed on the main board. [Action1] Replace the FROM/SRAM module. * [Action2] Replace the main board.
2.	[Description] A bus error has occurred in the communication controller. * [Action] Replace the main board.
3.	[Description] A parity alarm condition has occurred in DRAM controlled by the communication controller. * [Action] Replace the main board.
5.	[Description] A servo alarm condition has occurred on the main board. [Action1] Replace the servo card. * [Action2] Replace the main board. [Action3] If an option board is installed, replace the option board.
6.	[Description] The SYSEMG alarm has occurred. [Action1] Replace the servo card. [Action2] Replace the CPU card. * [Action3] Replace the main board.
7.	[Description] The SYSFAIL alarm has occurred. [Action1] Replace the servo card. [Action2] Replace the CPU card. * [Action3] Replace the main board. [Action4] If an option board is installed, replace the option board.
8.	[Description] 5V is supplied to Main board. Above alarms do not occur.

* If the main board or FROM/SRAM module is replaced, the contents of memory (parameters, specified data, etc.) will be lost. Before you replace the unit, therefore, be sure to make a backup copy of the data.
If an alarm is issued, it might be impossible to make a backup copy of data. So, back up the contents of memory routinely.

3.7.2 Troubleshooting by LEDs on Power Supply Unit

LED indication	Failure description and required measure
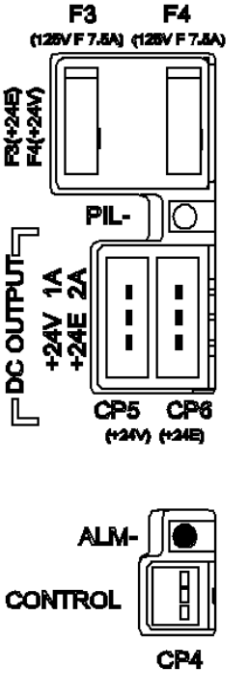	[Description] When ALM LED (red) turned on, power supply alarm has occurred. [Action1] Check fuse F4 (+24V) on the power supply unit, and replace it if it has blown. [Action2] Check the printed-circuit boards, the relevant units, and cables using the DC power supplies (+5V, 15V, and +24V), and replace them if defective. [Action3] Replace the power supply unit.
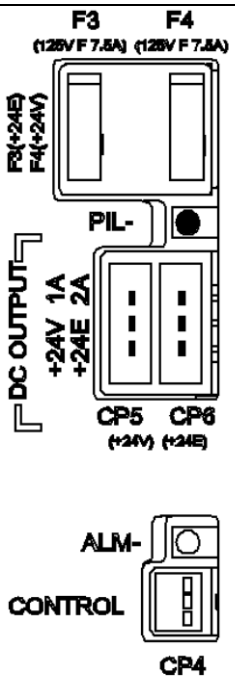	[Description] If the PIL LED (green) does not light, the power supply unit has not been supplied with 200 VAC. [Action1] Check fuse F1 on the power supply unit, and replace it if it has blown. For detailed causes of fuse F1 blown out, please refer to Section 3.6. [Action2] Replace the power supply unit.

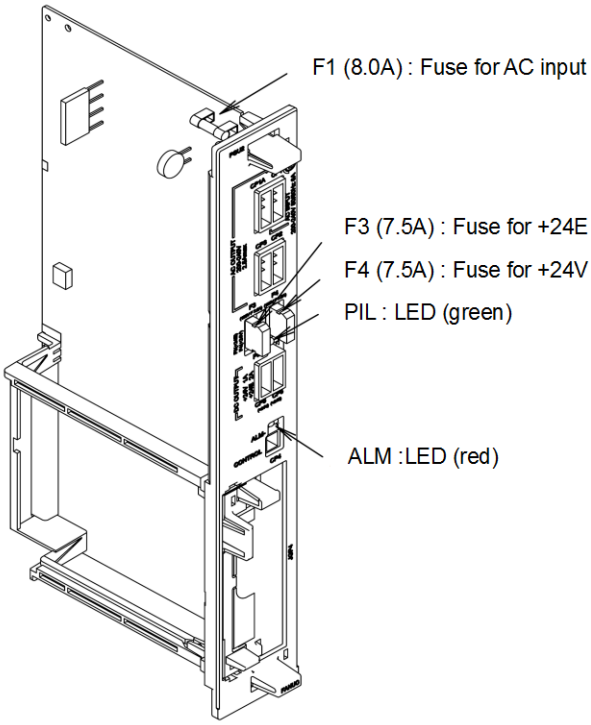

Fig.3.7.2(a) LEDs on the power supply unit

3.7.3 Troubleshooting by LED on the Emergency Stop Board

LED indication	Failure description and required measure
FU4 (Red) (B-cabinet only)	[Description] When the LED (red) turned on, the fuse FU4 was blown. 24V for safety DI signal(SFDI) was not supplied. [Action1] Check the connection of SFDI on Safety I/O board. [Action2] Check the operator's panel cable (CRT27), and replace it if required. [Action3] Replace the E-STOP unit.
24V (Green)	[Description] When the LED does not light, the +24E power for the teach pendant and internal circuit is not supplied. [Action1] Check the CRP33(A-cabinet) or CP5A(B-cabinet) connector and check that 24 V is supplied. When 24 V is not supplied, check CP6 connector and fuse F3 of power supply unit. [Action2] Replace the emergency stop board.
EXT24/24EXT (Green)	[Description] When the LED (green) does not light, the EXT24V power for emergency stop circuit is not supplied. [Action1] If the fuse disconnection is not detected and the alarm is displayed, check the voltages of EXT24V and EXT0V (TBOP14 for A-cabinet or TBOP10 for B-cabinet). If +EXT24V or EXT0V is not used, check the jumper pin between EXT24V and INT24V or between EXT0V and INT0V. [Action2] If the FENCE, SVOFF, and EXEMG is used, these signals may be connected to 0V or ground. Check these cables. [Action3] Replace the emergency stop board. [Action4] Check the teach pendant cable, and replace it if required. [Action5] Check the teach pendant, and replace it if required. [Action6] Check the operator's panel cable (CRT27), and replace it if required.
SVON1/SVON2 (Green)	[Description] These LEDs (green) indicate the status of SVON1/SVON2 signals from the emergency stop board to the servo amplifier. When the SVON1 and SVON2 (green) turned on, the servo amplifier is ready to energize.
LINK1/LINK2 (Green)	[Description] Please see the Section 3.9. "LEDs on units supporting I/O Link *i* ". If LINK1 or LINK2 state is "Blink (1:1 at high speed)", communication is at halt because of an alarm. [Action1] Identify the cause according to the states of the red LED "ALM" stated below or information displayed on the TP screen.

LED indication	Failure description and required measure
ALM1/ALM2 (Red)	[Description] Please see the Section 3.9. “LEDs on units supporting I/O Link *i*”. [1] If the ALM1 or ALM2 state is “Steadily ON”, hardware may be defective. [Action1] Check the cable between the main board and the emergency stop board, and replace it if necessary. [Action2] Replace the emergency stop board. [Action3] Replace the main board. [2] If the ALM1 or ALM2 state is “Blink (1:1)”, the communication between the emergency stop board and a unit connected to I/O Link *i* (E-STOP unit) to the E-STOP unit is stopped, or the noise affects on the cable. [Action1] Check the communication cable between the emergency stop board and the unit connected to I/O Link *i* (E-STOP unit), and replace it if necessary. [Action2] Replace the unit connected to I/O Link *i* (E-STOP unit). [Action3] Replace the emergency stop board. [3] If the ALM1 or ALM2 state is “Blink (3:1)”, a unit connected to I/O Link *i* (E-STOP unit) to the E-STOP unit may have power failure. [Action1] Check fuse on a unit connected to I/O Link *i* (E-STOP unit) to the E-STOP unit, and replace it if it has blown. [Action2] Replace the unit connected to I/O Link *i* (E-STOP unit). [Action3] Replace the emergency stop board.

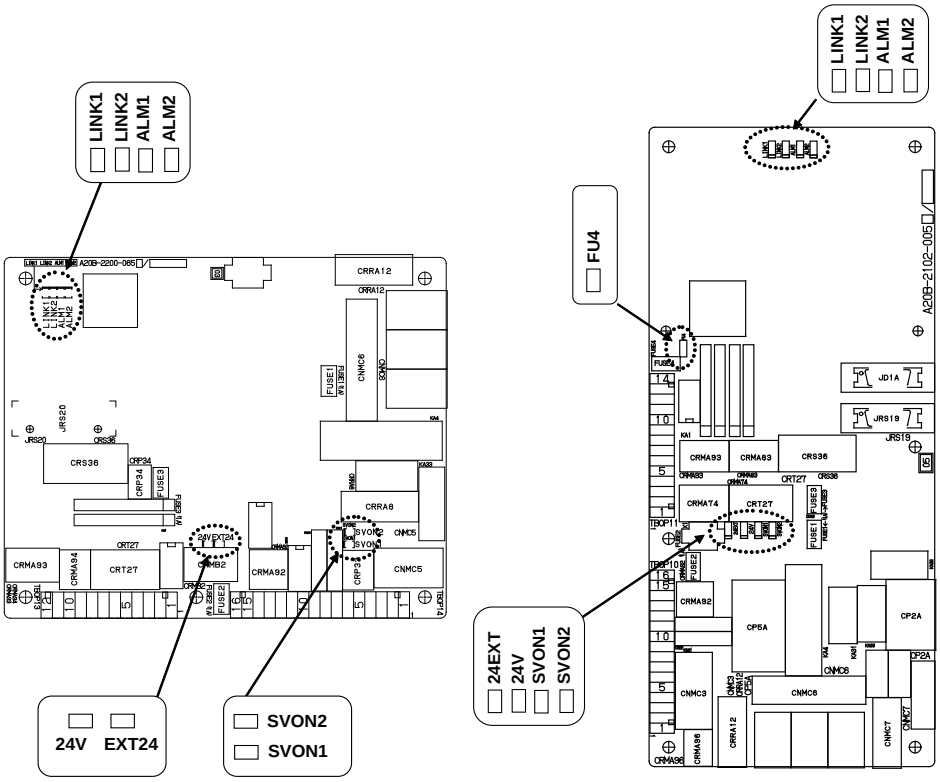

(A-cabinet) **(B-cabinet)**

Fig.3.7.3(a) LEDs on the emergency stop board

3.7.4 Troubleshooting by Alarm LEDs on the Process I/O Board

Process I/O JA,JB

LED	Description and action to be taken
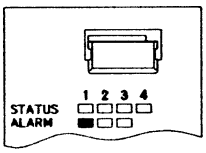	[Description] A communication alarm occurred between the main board and process I/O board. [Action1] Replace the process I/O board. * [Action2] Replace the main board. [Action3] Replace the I/O link connection cable.
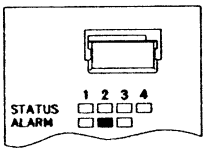	[Description] A fuse on the process I/O board is blown. [Action1] Replace the blown fuse on the process I/O board. [Action2] Examine the cables and peripheral devices. connected to the process I/O board. Replace any failed components. [Action3] Replace the process I/O board.

* If the main board or FROM/SRAM module is replaced, the contents of memory (parameters, specified data, etc.) will be lost. Before you replace the unit, therefore, be sure to make a backup copy of the data.
If an alarm is issued, it might be impossible to make a backup copy of data. Therefore, back up the contents of memory routinely.

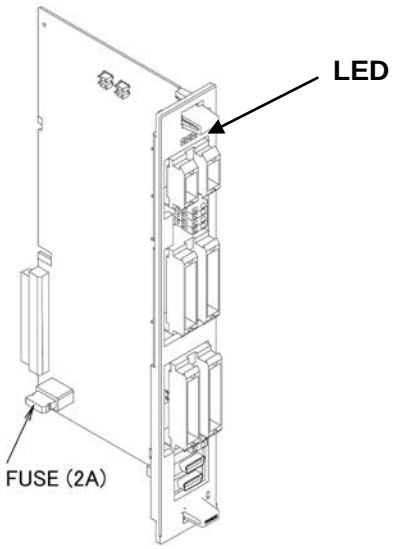

Fig.3.7.4 (a) LEDs on the Process I/O board JA/JB

Process I/O MA,MB

LED	Color	Description
ALM1	Red	[Explanation] An alarm is issued during communication between the main board and the process I/O board. [Measure 1] Replace the process I/O board. [Measure 2] Replace the I/O link connection cable. [Measure 3] Replace the main board.
FALM	Red	[Explanation] The fuse on the process I/O board is blown. [Measure 1] Replace the fuse on the process I/O board. [Measure 2] Check the cables and peripheral units connected to the process I/O board and replace the defective units. [Measure 3] Replace the process I/O board.

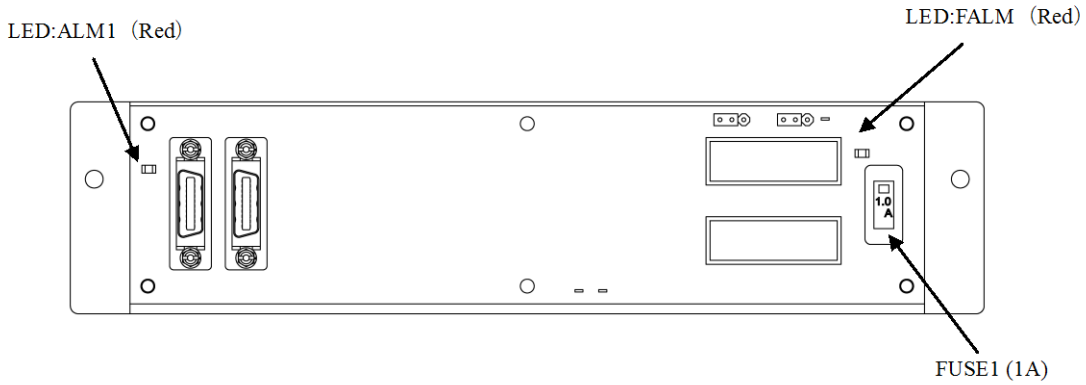

Fig.3.7.4 (b) LEDs on the process I/O board MA

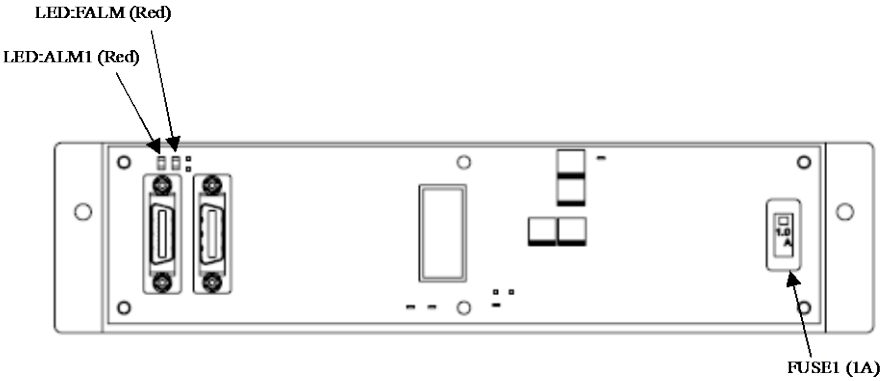

Fig.3.7.4 (c) LEDs on the process I/O board MB

3.7.5 Troubleshooting by LEDs on the 6-Axis Servo Amplifier

The 6-Axis servo amplifier has alarm LEDs. Troubleshoot the alarm indicated by the LEDs, referring also to the alarm indication on the teach pendant.

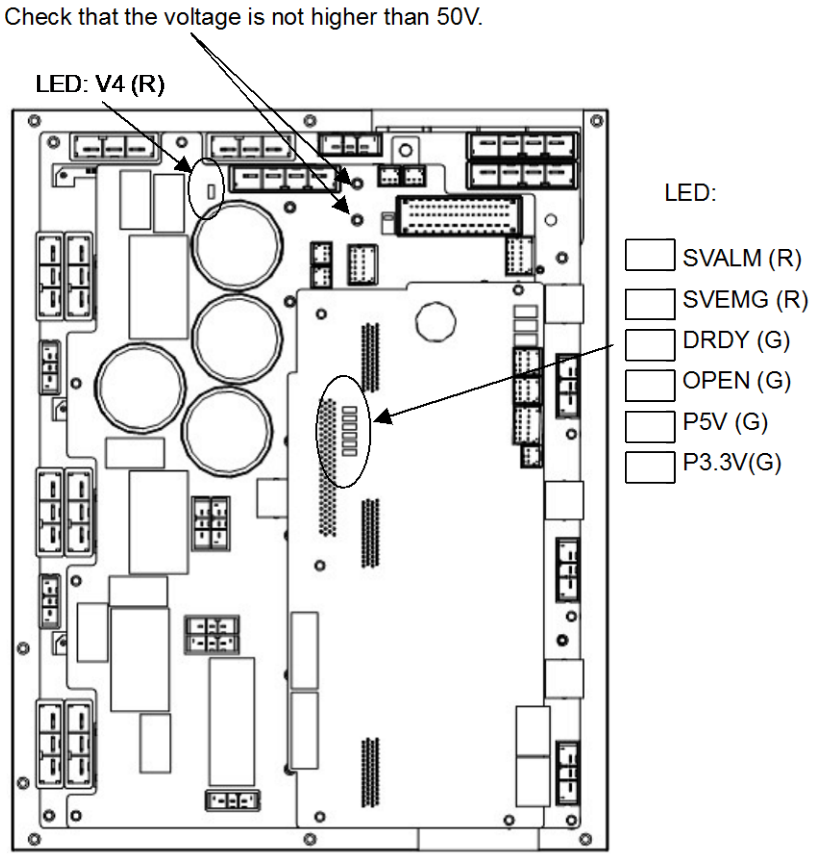

Fig.3.7.5(a) LEDs on the 6-Axis servo amplifier

> ⚠ **WARNING**
> Before touching the 6-Axis servo amplifier, check the DC link voltage with the screws located above the LED "V4". By using a DC voltage tester, check that the voltage is 50 V or less.

LED	Color	Description
V4	Red	Lights when the DCLINK circuit inside the 6-axis servo amplifier is charged to reach the specified voltage. <u>If the LED does not light after pre-charge is finished:</u> [Action 1] The DC Link line may be short-circuited. Check for connection. [Action 2] The charge current control resistor may be defective. Replace the emergency stop unit. [Action 3] Replace the 6-axis servo amplifier.
ALM	Red	Lights when the 6-axis servo amplifier detects an alarm. <u>If the LED lights when there is no alarm condition in the machine:</u> [Action] Replace the 6-axis servo amplifier. <u>If the LED does not light when there is an alarm condition in the machine:</u> [Action] Replace the 6-axis servo amplifier.

LED	Color	Description
SVEMG	Red	Lights when an emergency stop signal is input to the 6-axis servo amplifier. If the LED lights when the machine is not at an emergency stop: [Action] Replace the servo amplifier. If the LED does light when the machine is at an emergency stop: [Action] Replace the 6-axis servo amplifier.
DRDY	Green	Lights when the 6-axis servo amplifier is ready to drive the servo motor. If the LED does not light when the motor is activated: [Action] Replace the 6-axis servo amplifier.
OPEN	Green	Lights when the communication between the 6-axis servo amplifier and the main board is normal. If the LED does not light: [Action 1] Check for the connection of the FSSB optical cable. [Action 2] Replace the servo card. [Action 3] Replace the 6-axis servo amplifier.
P5V	Green	Lights when the power supply circuit inside the 6-axis servo amplifier outputs a voltage of +5 V normally. If the LED does not light: [Action 1] Check the robot connection cable (RMP1) to see if there is a ground fault in the +5V wire. [Action 2] Replace the 6-axis servo amplifier.
P3.3V	Green	Lights when the power supply circuit inside the 6-axis servo amplifier outputs a voltage of +3.3 V normally. If the LED does not light: [Action] Replace the 6-axis servo amplifier.

3.7.6 Troubleshooting by LEDs on the αiPS

The αiPS has alarm LEDs. Troubleshoot the alarm indicated by the LEDs, referring also to the alarm indication on the teach pendant.

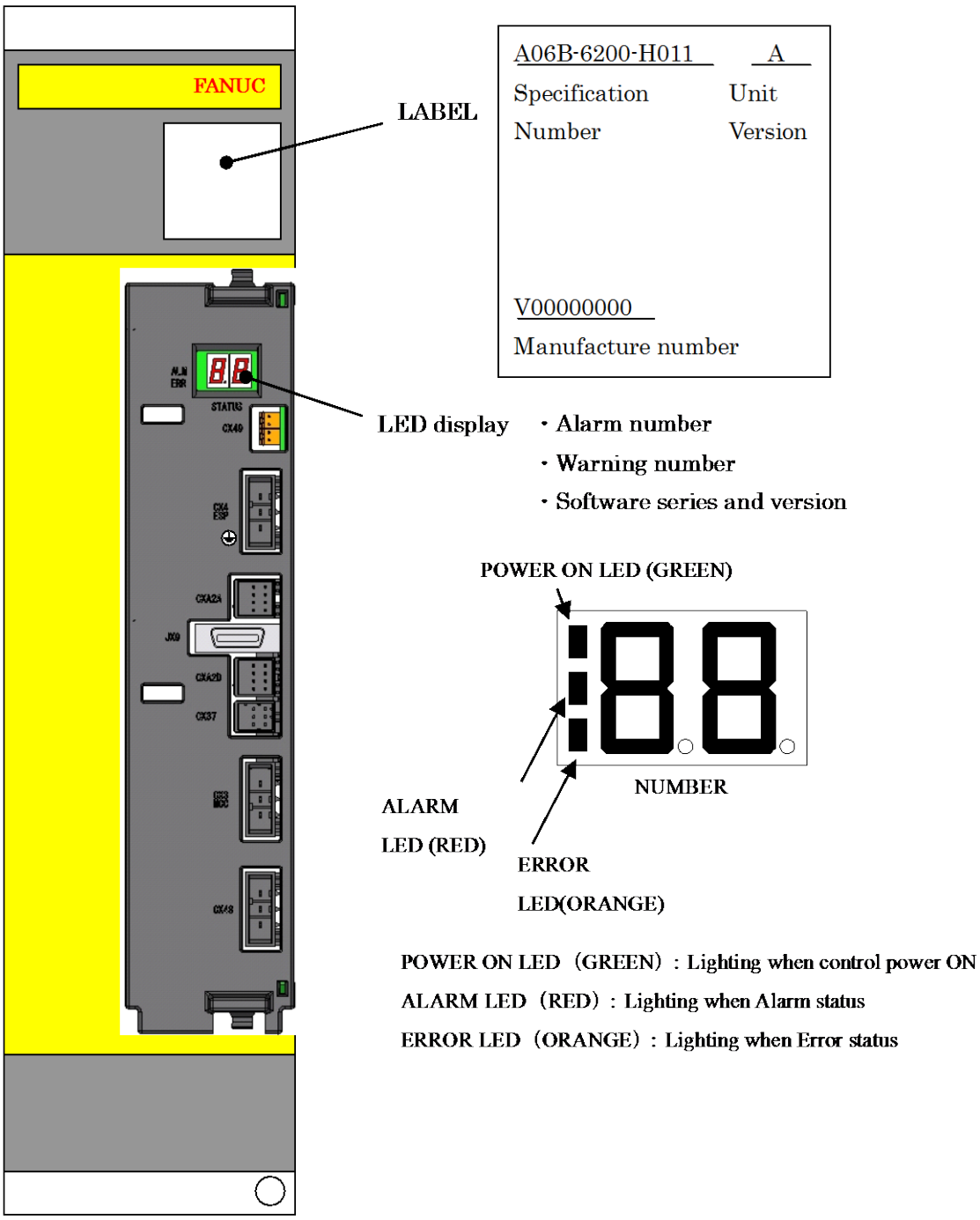

Detail of LED Display of αiPS

ALARM LED	ERROR LED	STATUS LED	Contents
		LED is off	Control power has not turned ON, or hardware failure.
		Number / alphabet	The software series/edition is displayed at 4 sessions for about 4 seconds after the power is turned on. First 1 sec: Upper 2 digits of the software series Second 1 sec: Lower 2 digits of the software series Third 1sec : Upper 2 digits of software version Forth 1sec : Lower 2 digits of software version Example) In case of software series/version 9G00/01.0 [9][G] → [0][0] → [0][1] → [_][0]
		– – Blink	Serial communication with the servo or spindle amplifier is being established
		– – Lighting	Serial communication with the servo or spindle amplifier is established
		00 Blink	Start up main power (Precharging)
		00	Ready to start main power
Lighting		Number 01 to	Alarm status
		Number 01to	Warning status

LED	Description
01	PS Overcurrent
02	PS internal fan failure
03	PS overload
04	PS low volt. DC link
05	PS pre-charge failure
06	PS low volt. control
07	PS over volt. DC link
10	PS external fan failure
14	PS improper Input power
15	PS soft thermal
24	PS hardware error

3.7.7 Troubleshooting by LEDs on the Sensor I/F Unit for Collaborative Robot

3.7.7.1 Status indication of the I/O Link *i*

The sensor I/F unit for the collaborative robot only has the following LEDs to indicate the communication status of the I/O Link *i*.

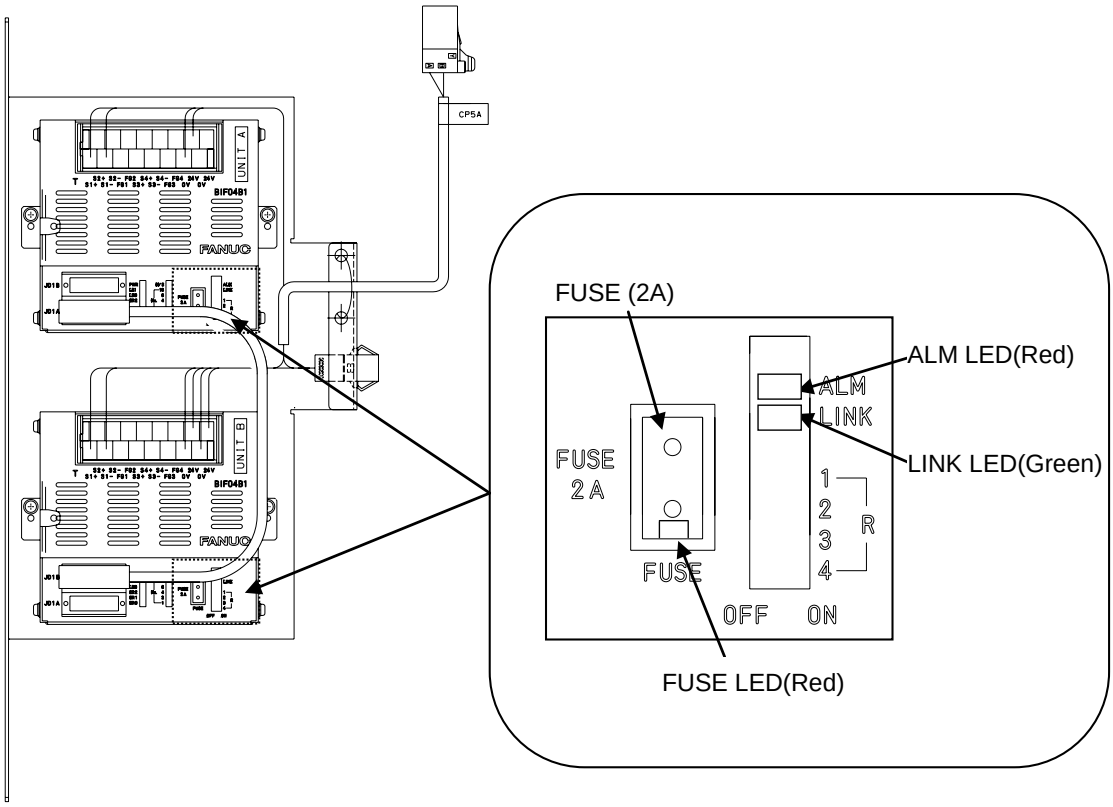

Fig.3.7.7(a) LEDs on the sensor I/F unit for Collaborative Robot

- FUSE LED
  Lights when the fuse blows.
  Remove the cause of the blown fuse, and the replace the fuse.
- LINK LED
  The LINK LED indicates the group communication status as described below.

Operation mode	LED Indications	Meaning	Remarks
I/O Link *i*	OFF	Power OFF	
	ON	Power ON	
	Blink (1:1)	Communication in progress Standard	ON = approx. 0.5 sec OFF = approx. 0.5 sec
	Blink (3:1)	Communication in progress (Dual check safety in use)	ON = approx. 1.5 sec OFF = approx. 0.5 sec
	Blink (1:1 at high speed)	Communication not in progress Watch-dog alarm occurrence	ON = approx. 0.25 sec OFF = approx. 0.25 sec

- ALM LED
  The ALM LED indicates the types of I/O Link *i* alarms as described below.

Operation mode	LED Indications	Meaning	Remarks
I/O Link ***i***	OFF	Normal state or power OFF	
	ON	Occurrence of any of a parity alarm, external input alarm, and dual check safety alarm	
	Blink (1:1)	Broken wire between the group of interest and a group subsequent to it	ON = approx. 0.5 sec OFF = approx. 0.5 sec
	Blink (3:1)	Power failure (including instantaneous power failure) in a group subsequent to the group of interest	ON = approx. 1.5 sec OFF = approx. 0.5 sec
	Blink (1:3)	Status alarm	ON = approx. 0.5 sec OFF = approx. 1.5 sec
	Blink (1:1 at high speed)	Alarm occurred due to a command from the master	ON = approx. 0.25 sec OFF = approx. 0.25 sec

3.7.7.2 Status indications of the distributed Link

LEDs are arranged as shown below.

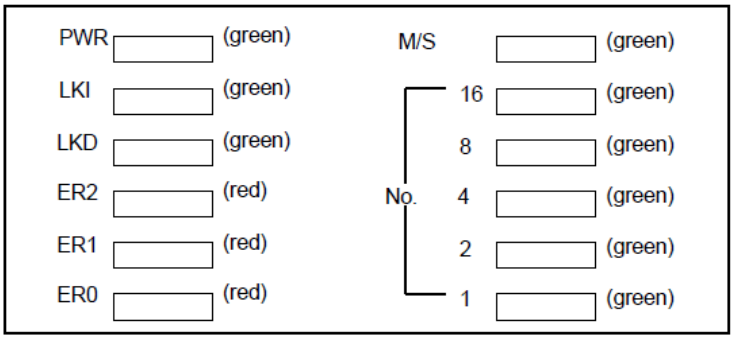

- PWR : Lights when the power is turned on.
- LKI : Lights when the unit communicates with the master of I/O Link or I/O Link *i*.
- LKD : Lights when the unit communicates with the basic unit.
  (Lights dimly if the number of basic units connected is small.)
- ER0 to 2 : Lights if an error occurs.
- M/S : If an error occurs, this LED indicates which of the interface unit and the basic unit the error is detected.
  The indication is made by whether this LED lights or not if an error occurs.

  ON: An error is detected in the interface unit.
  OFF: An error is detected in the basic unit.

The details for the relation between unit number LEDs and errors refer to “FANUC I/O Unit-MODEL B CONNECTION MANUAL (**B-62163E/04)**”.

3.7.8 Troubleshooting by LEDs on the αiSV

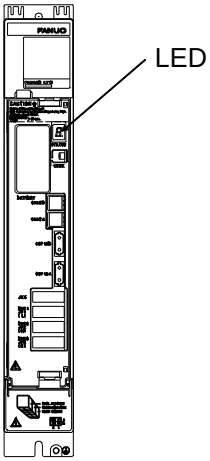

1. Alarm Code 1
   [Explanation] Inverter: internal cooling fan stopped
   [Action 1] Check whether there is any foreign material in the fan.
   [Action 2] Be sure to push the faceplate (control printed-circuit board) as far as it will go.
   [Action 3] Check that the fan connector is attached correctly.
   [Action 4] Replace the fan.
   [Action 5] Replace the αiSV.

2. Alarm Code 2
   [Explanation] Inverter: control power supply undervoltage
   [Action 1] Check the three-phase input voltage of the amplifier (the voltage shall not be lower than 85% of the rated input voltage).
   [Action 2] Check the 24 V power supply voltage output from the 6ch-amplifier (the voltage shall normally not lower than 22.8 V).
   [Action 3] Check the connector and cable (CXA2A/B).
   [Action 4] Replace the αiSV.

3. Alarm Code 5
   [Explanation] Inverter: DC link undervoltage
   [Action 1] Check that the screws for the DC link connection cable (bar) are tight.
   [Action 2] If a DC link low voltage alarm condition occurs in one αiSV only, be sure to push the faceplate (control printed-circuit board) of that αiSV as far as it will go.
   [Action 3] Replace the αiSV in which this alarm has occurred.

4. Alarm Code 6
   [Explanation] Inverter: overheat
   [Action 1] Check that the motor is being used at or below its continuous rating.
   [Action 2] Check that the cooling capacity of the cabinet is sufficient (inspect the fans).
   [Action 3] Check that the ambient temperature is not too high.
   [Action 4] Be sure to push the faceplate (control printed-circuit board) as far as it will go.
   [Action 5] Replace the αiSV.

5. Alarm Code F
   [Explanation] cooling fan stopped of the radiator
   [Action 1] Check whether there is any foreign material in the fan.
   [Action 2] Be sure to push the faceplate (control printed-circuit board) as far as it will go.
   [Action 3] Check that the fan connector is attached correctly.
   [Action 4] Replace the fan.
   [Action 5] Replace the αiSV.

6. Alarm Code P
   [Explanation] Communication error between amplifier and module

[Action 1] Check the connector and cable (CXA2A/B).
[Action 2] Replace the control printed-circuit board.
[Action 3] Replace the αiSV.

7. Alarm Code 8

[Explanation] Inverter: DC link current alarm
[Action 1] Disconnect the motor power leads from the αiSV, and release the αiSV from an emergency stop condition.
<1> If no abnormal DC link current alarm condition has occurred
Go to [Action 2].
<2> If an abnormal DC link current alarm condition has occurred Replace the αiSV.
[Action 2] Disconnect the motor power leads from the αiSV, and check the insulation between PE and the motor power lead U, V, or W.
<1> If the insulation is deteriorated
Go to [Action 3].
<2> If the insulation is normal
Replace the αiSV.
[Action 3] Disconnect the motor from its power leads, and check whether the insulation of the motor or power leads is deteriorated.
<1> If the insulation of the motor is deteriorated
Replace the motor.
<2> If the insulation of any power lead is deteriorated
Replace the power lead.

8. Alarm Codes 8., 9., and A.
(In case SRVO-156 IPMAL alarm (G:i A:j) occurs at the same time)

[Explanation] Inverter: IPM alarm
[Action 1] Be sure to push the faceplate (control printed-circuit board) as far as it will go.
[Action 2] Disconnect the motor power leads from the αiSV, and release the αiSV from an emergency stop condition.
<1> If no IPM alarm condition has occurred
Go to [Action 3].
<2> If an IPM alarm condition has occurred
Replace the αiSV.
[Action 3] Disconnect the motor power leads from the αiSV, and check the insulation between PE and the motor power lead U, V, or W.
<1> If the insulation is deteriorated
Go to [Action 4].
<2> If the insulation is normal
Replace the αiSV.
[Action 4] Disconnect the motor from its power leads, and check whether the insulation of the motor or power leads is deteriorated.
<1> If the insulation of the motor is deteriorated
Replace the motor.
<2> If the insulation of any power lead is deteriorated
Replace the power lead.

9. Alarm Codes 8., 9., and A.
(In case SRVO-291 IPMAL overheat (G:i A:j) occurs at the same time)

[Explanation] Inverter: IPM alarm (OH)
[Action 1] Be sure to push the faceplate (control printed-circuit board) as far as it will go.
[Action 2] Check that the heat sink cooling fan is running.
[Action 3] Check that the motor is being used at or below its continuous rating.
[Action 4] Check that the cooling capacity of the cabinet is sufficient (inspect the fans).
[Action 5] Check that the ambient temperature is not too high.
[Action 6] Replace the αiSV.

10. Alarm Codes b, c, and d

[Explanation] Inverter: DC link current alarm
[Action 1] Check whether the servo parameters have default values. Alternatively, if an abnormal motor current alarm condition occurs only on rapid acceleration/deceleration, it is likely that the motor is being used under too harsh a condition. Increase the acceleration/deceleration time constant, and see what will occur.
[Action 2] Be sure to push the faceplate (control printed-circuit board) as far as it will go.
[Action 3] Disconnect the motor power leads from the αiSV, and release the αiSV from an emergency stop condition.
<1> If no abnormal motor current occurs
Go to [Action 4].
<2> If an abnormal motor current occurs
Replace the αiSV.
[Action 4] Disconnect the motor power leads from the αiSV, and check the insulation between PE and the motor power lead U, V, or W.
<1> If the insulation is deteriorated
Go to [Action 5].
<2> If the insulation is normal
Replace the αiSV.
[Action 5] Disconnect the motor from its power leads, and check whether the insulation of the motor or power leads is deteriorated.
<1> If the insulation of the motor is deteriorated
Replace the motor.
<2> If the insulation of any power lead is deteriorated
Replace the power lead.

11. Alarm Code "-" Blinking

[Explanation] Inverter: abnormal control power supply
[Action 1] Disconnect the feedback cable (JF*) from the αiSV, and then switch on the power.
<1> If blinking continues
Replace the αiSV.
<2> If blinking stops
Go to [Action 2].
[Action 2] Disconnect the feedback cable (JF*) from the Pulsecoder, and then switch on the power. (Keep the cable on the αiSV side connected.)
<1> If blinking continues
Replace the cable.
<2> If blinking stops
Replace the motor.

12. Alarm Code U

[Explanation] Inverter: FSSB communication error (COP10B) (NOTE)

[Action 1] Replace the αiSV optical cable (COP10B) that is nearest to the CNC on which "U" is displayed (the cable between UNIT2 and UNIT3).

[Action 2] Replace the αiSV that is nearest to the CNC on which "U" is displayed (UNIT3).

[Action 3] Replace the COP10B-side αiSV that is nearest to the CNC on which "U" is displayed (UNIT2).

[Action 4] Replace the servo card in the CNC.

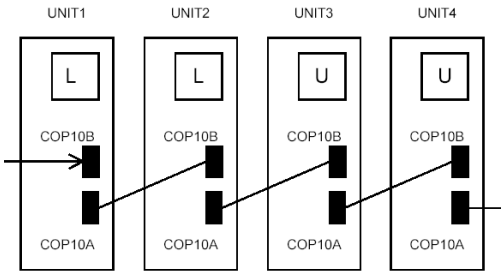

NOTE

When the CNC power is turned on, "U" blinks momentarily, and then "-" steadily lights. This is not a failure, though.

13. Alarm Code L

[Explanation] Inverter: FSSB communication error (COP10A)

[Action 1] Replace the αiSV optical cable (COP10A) that is farthest to the CNC on which "L" is displayed (the cable between UNIT2 and UNIT3).

[Action 2] Replace the αiSV that is farthest to the CNC on which "L" is displayed (UNIT2).

[Action 3] Replace the COP10A-side αiSV that is farthest to the CNC on which "L" is displayed (UNIT3).

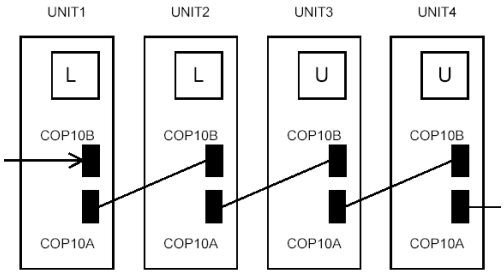

3.8 MANUAL OPERATION IMPOSSIBLE

The following explains checking and corrective actions required if the robot cannot be operated manually after the controller is turned on:

(1) Check and corrective action to be performed if manual operation is impossible

(Check 1) Check whether the teach pendant is enabled.
(Corrective action)
Turn on the teach pendant "enable".

(Check 2) Check whether the teach pendant is handled correctly.
(Corrective action)
To move an axis by manual operation, press the axis selection key and shift key at the same time.
Set the override for manual feed to a position other than the FINE and VFINE positions.

(Check 3) Check whether the ENBL signal of the peripheral device control interface is set to on.
(Corrective action)
Place the peripheral device control interface in the ENBL status.

(Check 4) Check whether the HOLD signal of the peripheral device control interface (hold status). (Check whether the hold lamp on the teach pendant is on.)
(Corrective action)
Turn off the HOLD signal of the peripheral device control interface.

(Check 5) Check whether the previous manual operation has been completed.
(Corrective action)
If the robot cannot be placed in the effective area because of the offset of the speed command voltage preventing the previous operation from being completed, check the position deviation on the status screen, and change the setting.

(Check 6) Check whether the controller is in the alarm status.
(Corrective action)
Release the alarm.

(2) Check and corrective action to be performed if the program cannot be executed

(Check 1) Check whether the ENBL signal for the peripheral-device control interface is on.
(Corrective action)
Put the peripheral device control interface in the ENBL state.

(Check 2) Check whether the HOLD signal for the peripheral device control interface is on. Also check whether the HOLD lamp on the teach pendant is on.
(Corrective action)
If the HOLD signal of the peripheral device control interface is on, turn it off.

(Check 3) Check whether the previous manual operation has been completed.
(Corrective action)
If the robot cannot be placed in the effective area because of the offset of the speed command voltage, which prevents the previous operation from being completed, check the position deviation on the status screen, then change the setting.

(Check 4) Check whether the controller is in the alarm status.
(Corrective action)
Release the alarm.

3.9 LEDS ON UNITS SUPPORTING I/O Link *i*

3.9.1 Meanings of LEDs on Units Supporting I/O Link *i*

The standard I/O Link *i* incorporates three LEDs, “LINK” (green), “ALM” (red), and “FUSE” (red) for each unit separately. These LEDs indicate the states of the units.
The following table lists the ON/OFF state of the LEDs and their meanings.

LED ON/OFF state	ON and OFF duration
Steadily OFF	
Steadily ON	
Blink (1:1)	ON = approx. 0.5 sec, OFF = approx. 0.5 sec
Blink (3:1)	ON = approx. 1.5 sec, OFF = approx. 0.5 sec
Blink (1:3)	ON = approx. 0.5 sec, OFF = approx. 1.5 sec
Blink (1:1 at high speed)	ON = approx. 0.25 sec, OFF = approx. 0.25 sec

LED「LINK」(green)

The “LINK” (green) LED indicates the state of communication. The following table lists the meanings of LED states.

Operation mode	LED state	Meaning	Fault location and action
Common	OFF	Power OFF	
	ON	Power ON (before communication start)	
	Blink (1:1 at high speed)	Communication at halt	Communication is at halt because of an alarm. Identify the cause according to the states of the red LED stated below or information displayed on the CNC screen.
I/O Link	Blink (1:3)	Communication in progress	
I/O Link *i*	Blink (1:1)	Communication in progress	
	Blink (3:1)	Communication in progress (Dual check safety in use)	

LED「ALM」(red)

The “ALM” (red) LED indicates an alarm in the unit of interest or a unit subsequent to it. The following table lists the meanings of LED states.

Operation mode	LED state	Meaning	Fault location and action
Common	OFF	Normal state or power OFF	
I/O Link	ON	Alarm	It is likely that the hardware may be defective. Replace the unit.
I/O Link i	ON	Alarm	It is likely that the hardware may be defective. Replace the unit.
	Blink (1:1)	Broken wire between the unit of interest and a unit subsequent to it	Check for a defective cable or a poor cable connection between JD1A on the unit of interest and JD1B on a unit subsequent to that unit. Alternatively, it is likely that there may be noise. Check to see if there is noise around the cable.
	Blink (3:1)	Power failure (including instantaneous power failure) in a unit subsequent to the unit of interest	Identify and remove the cause of a power failure in a unit subsequent to the unit of interest.
	Blink (1:3)	Status alarm	A status alarm, such as a DO ground fault, has occurred. Identify and remove the cause of the alarm.

4 PRINTED CIRCUIT BOARDS

The printed circuit boards are factory-set for operation. Usually, you do not need to set or adjust them. This chapter describes the standard settings and adjustment required if a defective printed circuit board is replaced. It also describes the test pins and the LED indications.
The controller printed circuit board includes the main unit printed circuit board and one or more cards or modules installed horizontally to the main-unit printed-circuit board.
These PC boards have interface connectors, LED indicators, and a plastic panel at the front. At the rear, there is a backplane connector.

4.1 MAIN BOARD

Card and Modules

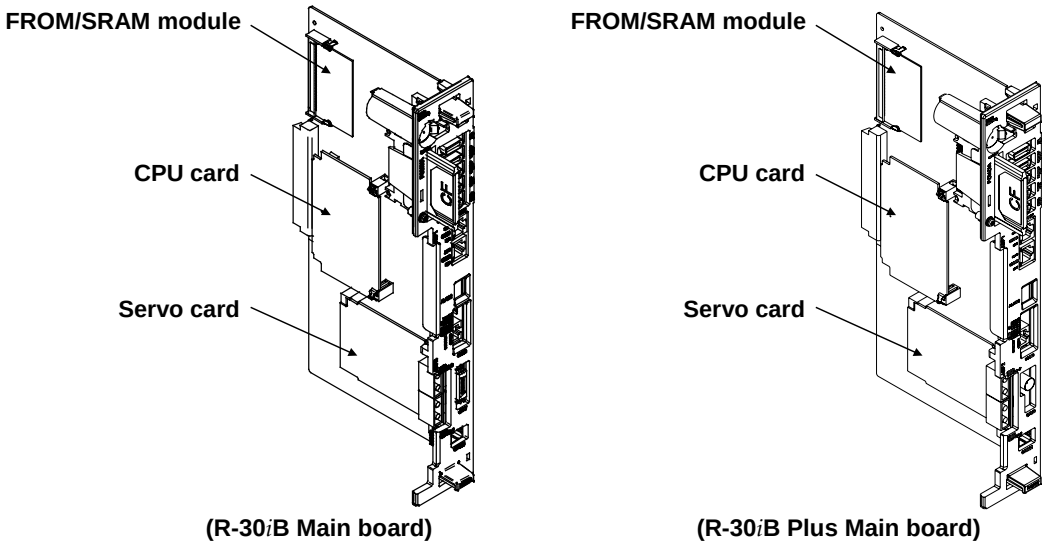

(R-30*i*B Main board) (R-30*i*B Plus Main board)

Fig.4.1(a) Main board

Name	Ordering Specification	Board Specification	Note
Main board	A05B-2600-H001	A16B-3200-0730	Standard
		A16B-3200-0780	
	A05B-2600-H002	A16B-3200-0731	Option (Force sensor)
		A16B-3200-0781	
	A05B-2600-H003	A16B-3200-0732	Option (Force sensor) (High speed com. CPU)
		A16B-3200-0782	
	A05B-2600-H004	A16B-3200-0800	Standard For I/O Link *i* slave
	A05B-2600-H005	A16B-3200-0801	Option (Force sensor) For I/O Link *i* slave
	A05B-2600-H006	A16B-3200-0802	Option (Force sensor, High speed) For I/O Link *i* slave

Name	Ordering Specification	Board Specification	Note
Main board	A05B-2670-H001 (R-30*i*B Plus)	A16B-3200-0810	Standard For I/O Link *i* slave
	A05B-2670-H002 (R-30*i*B Plus)	A16B-3200-0811	Option (Force sensor) For I/O Link *i* slave
	A05B-2670-H003 (R-30*i*B Plus)	A16B-3200-0812	Option (Force sensor, High speed) For I/O Link *i* slave
CPU card	A05B-2600-H020	A20B-3300-0686 A17B-3301-0106	Standard / SDRAM 32Mbyte
	A05B-2600-H021	A20B-3300-0687 A17B-3301-0107	Standard / SDRAM 64Mbyte
	A05B-2600-H022	A20B-3300-0688 A17B-3301-0108	Standard / SDRAM 128Mbyte
	A05B-2600-H023	A20B-3300-0683 A17B-3301-0103	High speed / SDRAM 32Mbyte
	A05B-2600-H024	A20B-3300-0684 A17B-3301-0104	High speed / SDRAM 64Mbyte
	A05B-2600-H025	A20B-3300-0685 A17B-3301-0105	High speed / SDRAM 128Mbyte
	A05B-2600-H026	A17B-3301-0109	Standard / SDRAM 32Mbyte For I/O Link *i* slave
	A05B-2600-H027	A17B-3301-0110	Standard / SDRAM 64Mbyte For I/O Link *i* slave
	A05B-2600-H028	A17B-3301-0111	Standard / SDRAM 128Mbyte For I/O Link *i*slave
	A05B-2600-H029	A17B-3301-0112	High speed / SDRAM 32Mbyte For I/O Link *i* slave
	A05B-2600-H030	A17B-3301-0113	High speed / SDRAM 64Mbyte For I/O Link *i* slave
	A05B-2600-H031	A17B-3301-0114	High speed / SDRAM 32Mbyte For I/O Link *i* slave
	A05B-2670-H020 (R-30*i*B Plus)	A17B-3301-0250	Standard /DRAM 1GB For I/O Link *i* slave
Servo card	A05B-2600-H040	A20B-3300-0664 A20B-3300-0774	6-axis
	A05B-2600-H041	A20B-3300-0663 A20B-3300-0773	12-axis
	A05B-2600-H042	A20B-3300-0662 A20B-3300-0772	18-axis
	A05B-2600-H043	A20B-3300-0661 A20B-3300-0771	24-axis
	A05B-2600-H044	A20B-3300-0660 A20B-3300-0770	36-axis
	A05B-2670-H040 (R-30*i*B Plus)	A20B-3300-0819	6-axis
	A05B-2670-H041 (R-30*i*B Plus)	A20B-3300-0818	12-axis
	A05B-2670-H042 (R-30*i*B Plus)	A20B-3300-0817	18-axis
	A05B-2670-H043 (R-30*i*B Plus)	A20B-3300-0816	24-axis
	A05B-2670-H044 (R-30*i*B Plus)	A20B-3300-0815	36-axis

Name	Ordering Specification	Board Specification	Note
FROM/SRAM module	A05B-2600-H060	A20B-3900-0283	FROM 32M/ SRAM 1M
		A20B-3900-0297	
	A05B-2600-H061	A20B-3900-0284	FROM 32M/ SRAM 2M
		A20B-3900-0298	
	A05B-2600-H062	A20B-3900-0285	FROM 32M/ SRAM 3M
		A20B-3900-0299	
	A05B-2600-H063	A20B-3900-0286	FROM 64M/ SRAM 1M
	A05B-2600-H064	A20B-3900-0287	FROM 64M/ SRAM 2M
	A05B-2600-H065	A20B-3900-0288	FROM 64M/ SRAM 3M
	A05B-2600-H066	A20B-3900-0280	FROM 128M/ SRAM 1M
	A05B-2600-H067	A20B-3900-0281	FROM 128M/ SRAM 2M
	A05B-2600-H068	A20B-3900-0282	FROM 128M/ SRAM 3M
	A05B-2600-H069 (R-30*i*B Plus)	A20B-3900-0293	FROM 256M/SRAM 1M
	A05B-2600-H070 (R-30*i*B Plus)	A20B-3900-0295	FROM 256M/SRAM 2M
	A05B-2600-H071 (R-30*i*B Plus)	A20B-3900-0296	FROM 256M/SRAM 3M

⚠CAUTION

If I/O Link *i* slave is being used, the combinations of the mainboard, CPU card, and software is limited as shown below.

[Main board (For I/O Link *i* slave)] + [CPU card (For I/O Link *i* slave)]
+ [Software (V8.30P14 or later)]

Except for the above condition, the system does not work correctly as follows.

a) [Main board] + [CPU card (For I/O Link *i* slave)]
Neither the function of I/O Link slave nor I/O Link *i* slave work correctly. And the alarm regarding I/O Link or I/O Link *i* occur on the master side.
And in case the software version is not correct, system does not work correctly.

b) [Main board (For I/O Link *i* slave)] + [CPU card]
Neither the function of I/O Link slave nor I/O Link *i* slave work correctly, and the alarm regarding I/O Link or I/O Link *i* occurs on the master side.

In case of using the R-30*i*B Plus, the combination of the specification of mainboard, CPU card and software is limited as below.

[Main board (R-30*i*B Plus)] + [CPU card (R-30*i*B Plus)]
+ [Software (V9.00P03 or later)]

Except for the above condition, the system does not work correctly. And CPU card (R-30*i*B Plus) may be broken.

LEDs

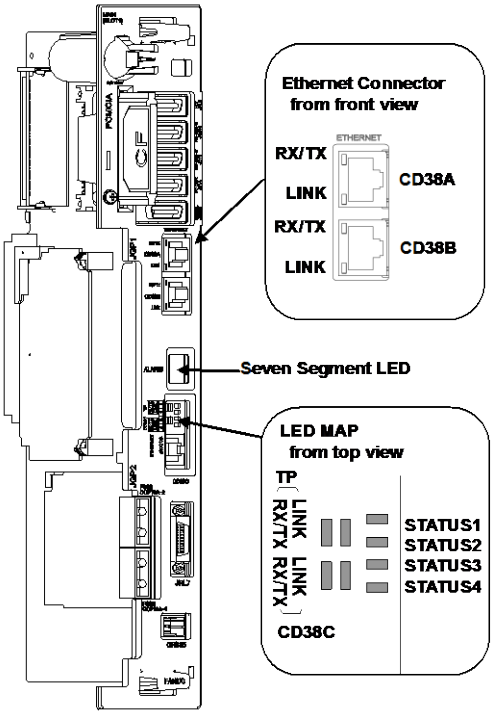

(R-30iB main board)

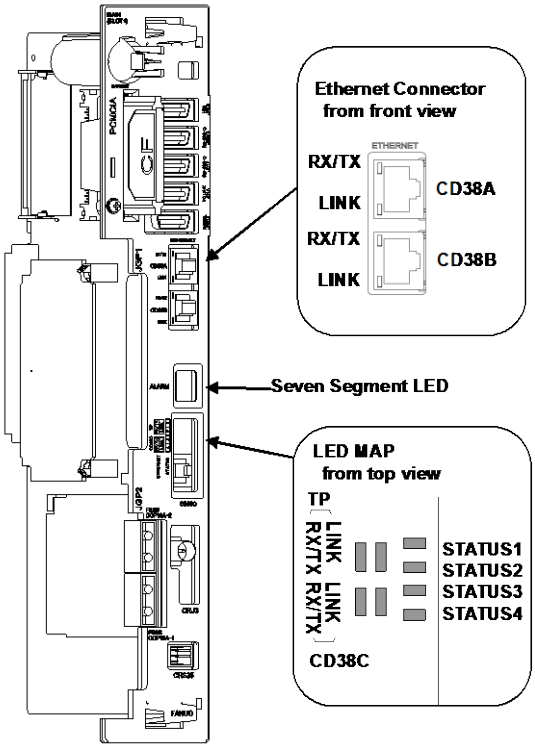

(R-30iB Plus main board)

Seven segment LED	Description
8.	When the alarm condition has occurred in the main board, this LED is turned on. Please see the Section 3.7.TROUBLESHOOTING BASED ON LED INDICATIONS.

ETHERNET CONNECTOR LED	Color	Description
RX/TX	Green	Blink during data transmission
LINK	Green	Light when a link is established

STATUS LED	Color	Description
STATUS1	Green	These LEDs show the operating status of the system. Please see the Section 3.7.TROUBLESHOOTING BASED ON LED INDICATIONS.
STATUS2	Green	
STATUS3	Green	
STATUS4	Green	

ETHERNET LED	Color	Description
TP_RX/TX	Green	Blink during data transmission of Ethernet TP
TP_LINK	Green	Light when a link of Ethernet TP is established
CD38C_RX/TX	Green	Blink during data transmission of CD38C
CD38C_LINK	Green	Light when a link of CD38C is established

4.2 EMERGENCY STOP BOARD A-cabinet:A20B-2200-0650/B-cabinet:A20B-2102-0050

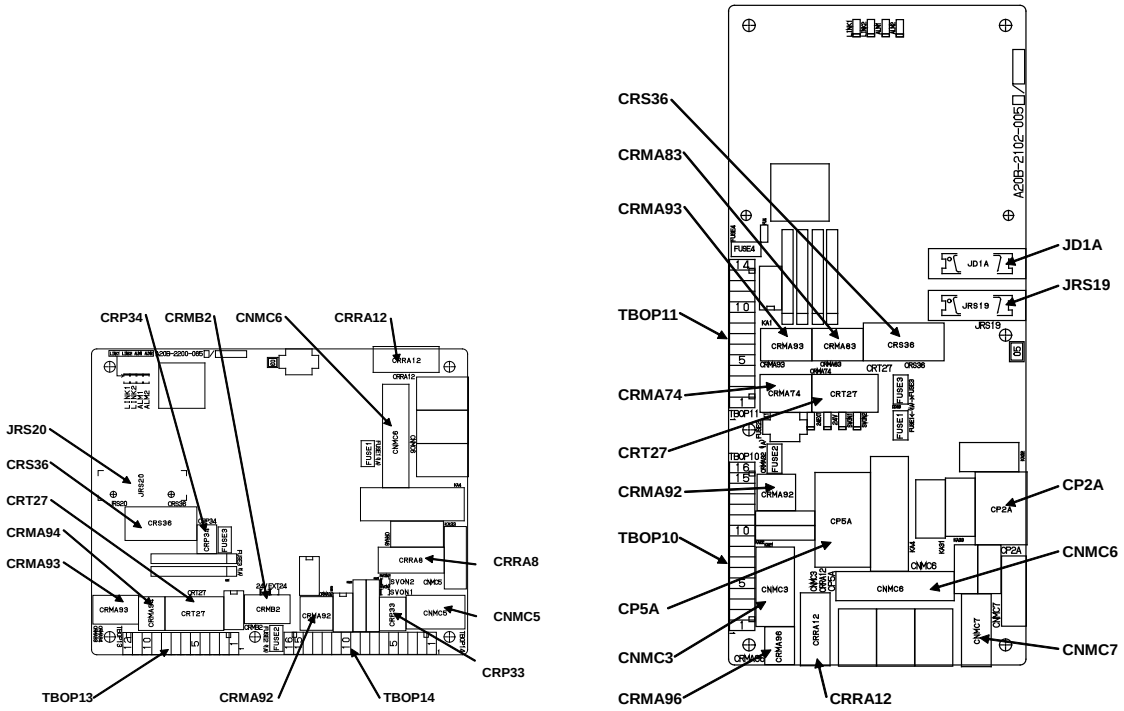

(A-cabinet) (B-cabinet)

Fig.4.2(a) Emergency stop board

4.3 BACKPLANE

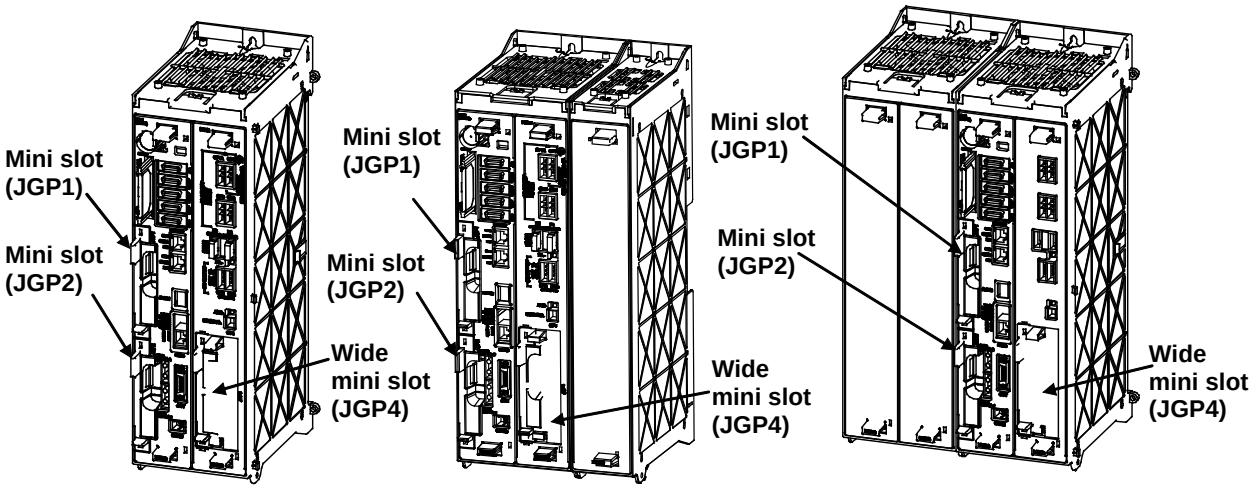

(2 slot) (3 slot) (4 slot)

Fig.4.3(a) Backplane

Name	Ordering Specification	Parts number	Board specification
2 slot backplane	A05B-2600-H080	A05B-2600-C001	A20B-2004-0980
4 slot backplane (B cabinet)	A05B-2600-H081	A05B-2600-C002	A20B-2004-0990
3 slot backplane (A cabinet)	A05B-2600-H082	A05B-2600-C003	A20B-8002-0900

4.4 PROCESS I/O BOARD JA (A16B-2204-0010)

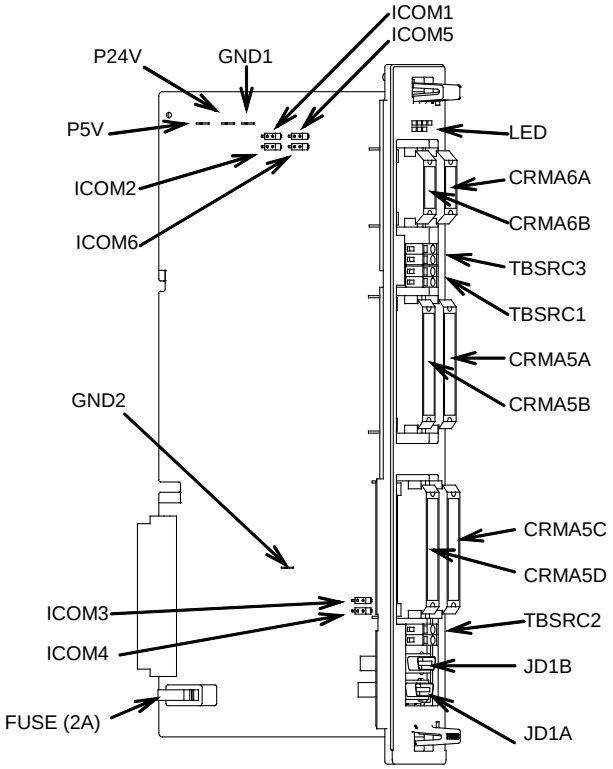

Fig.4.4 (a) Process I/O Board JA (Total edition 04A or earlier)

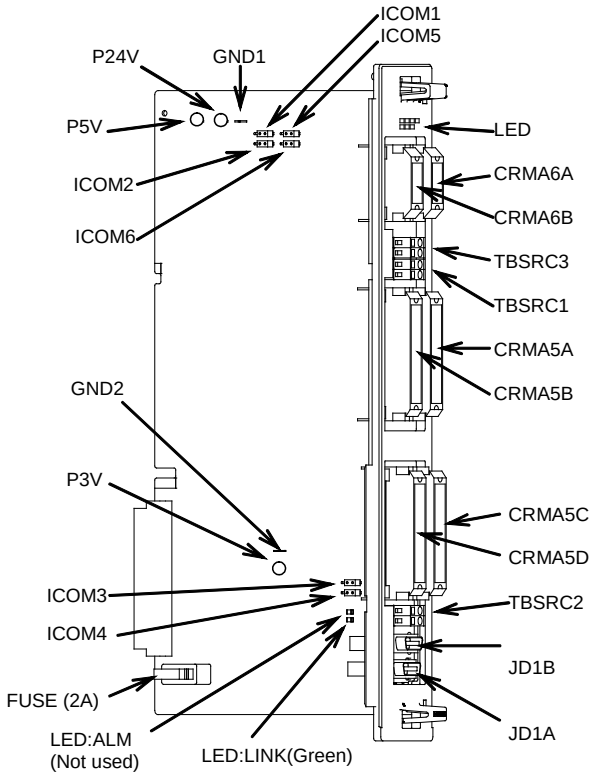

Fig.4.4 (b) Process I/O Board JA (Total edition 05B or later)

(1) Test pins

Name		Use
P24V	+24V	For measuring the DC supply voltage
P5V	+5V	
GND1	GND	
GND2	GND	
P3V (Total edition 05B or later)	+3.3V	

(2) Settings

Name		Standard setting	Description
ICOM1	UDI1 to 20 (Connector CRMA5A)	Side A	Set the common voltage Side A: +24 V common Side B: 0 V common
ICOM2	UDI21 to 40 (Connector CRMA5B)		
ICOM3	UDI41 to 60 (Connector CRMA5C)		
ICOM4	UDI61 to 80 (Connector CRMA5D)		
ICOM5	UDI81 to 88 (Connector CRMA6A)		
ICOM6	UDI89 to 96 (Connector CRMA6B)		

(3) Meaning of LEDs

	Color	Description
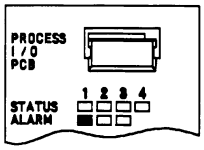	Red	A communication alarm occurred between the main board and process I/O board.
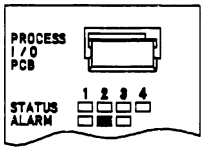	Red	A fuse (FUSE 1) in the process I/O board blew.
LINK (Total edition 05B or later)	Green	Blink (1:3) Communication in progress ON = approx. 0.5 sec, OFF = approx. 1.5 sec
		Blink (1:1) Communication not in progress ON = approx. 0.25 sec, OFF = approx. 0.25 sec
ALM (Total edition 05B or later)	Red	Not used

4.5 PROCESS I/O BOARD JB (A16B-2204-0011)

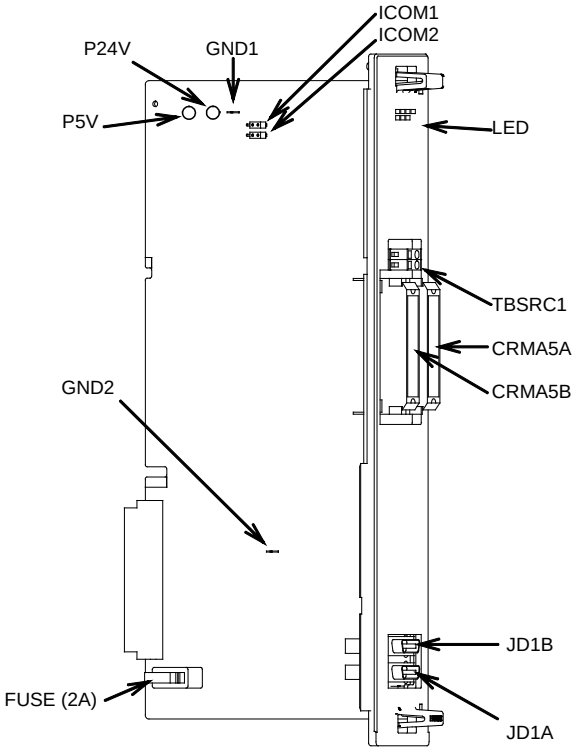

Fig.4.5 (a) Process I/O Board JB (Total edition 04A or earlier)

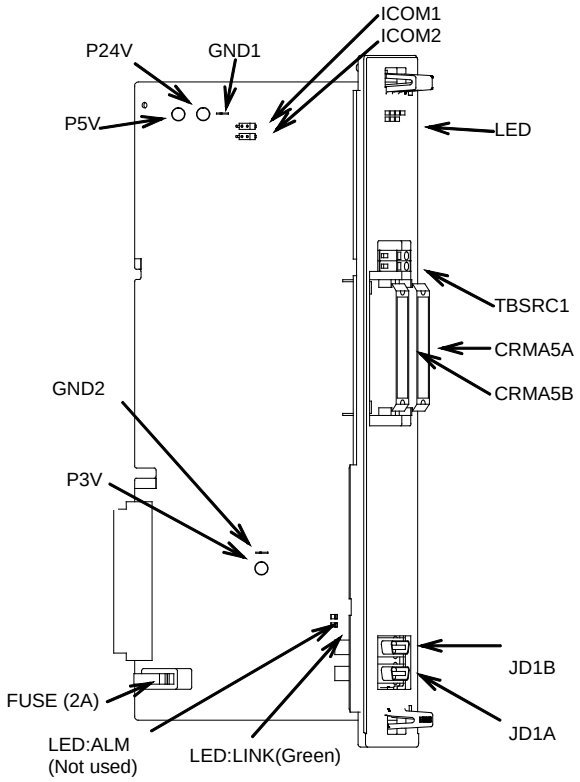

Fig.4.5 (b) Process I/O Board JB (Total edition 05B or later)

(1) Test pins

Name		Use
P24V	+24V	For measuring the DC supply voltage
P5V	+5V	
GND1	GND	
GND2	GND	
P3V (Total edition 05B or later)	+3.3V	

(2) Settings

Name		Standard setting	Description
ICOM1	UDI1 to 20 (Connector CRMA5A)	Side A	Set the common voltage Side A: +24 V common Side B: 0 V common
ICOM2	UDI21 to 40 (Connector CRMA5B)		

(3) LEDs

	Color	Description
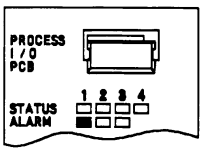	Red	A communication alarm occurred between the main board and process I/O board.
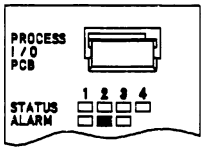	Red	A fuse (FUSE 1) in the process I/O board blew.
LINK (Total edition 05B or later)	Green	Blink (1:3) Communication in progress ON = approx. 0.5 sec, OFF = approx. 1.5 sec
		Blink (1:1) Communication not in progress ON = approx. 0.25 sec, OFF = approx. 0.25 sec
ALM (Total edition 05B or later)	Red	Not used

NOTE

Installation of Process I/O board JA, JB
1st Process I/O board is installed to slot 3, and 2nd Process I/O board is installed to slot 2.
If both Process I/O board JA and JB are installed, Process I/O board JA is installed to slot 2, and Process I/O board JB is installed to slot 3.

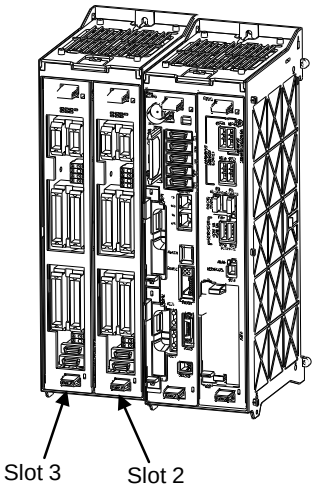

4.6 PROCESS I/O BOARD MA (A20B-2004-0380, A20B-2004-0381)

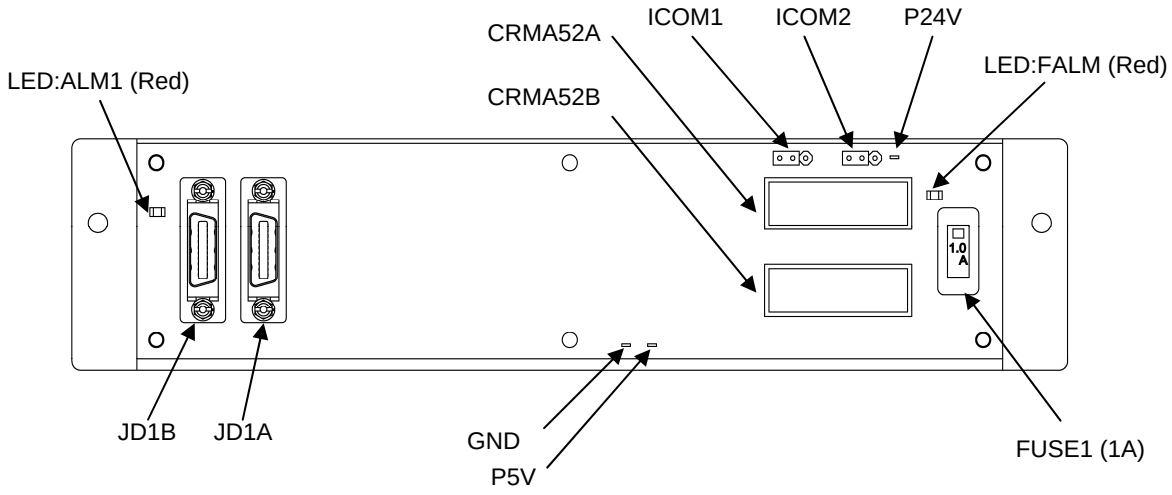

Fig.4.6 (a) Process I/O Board MA (Total edition 02A or earlier)

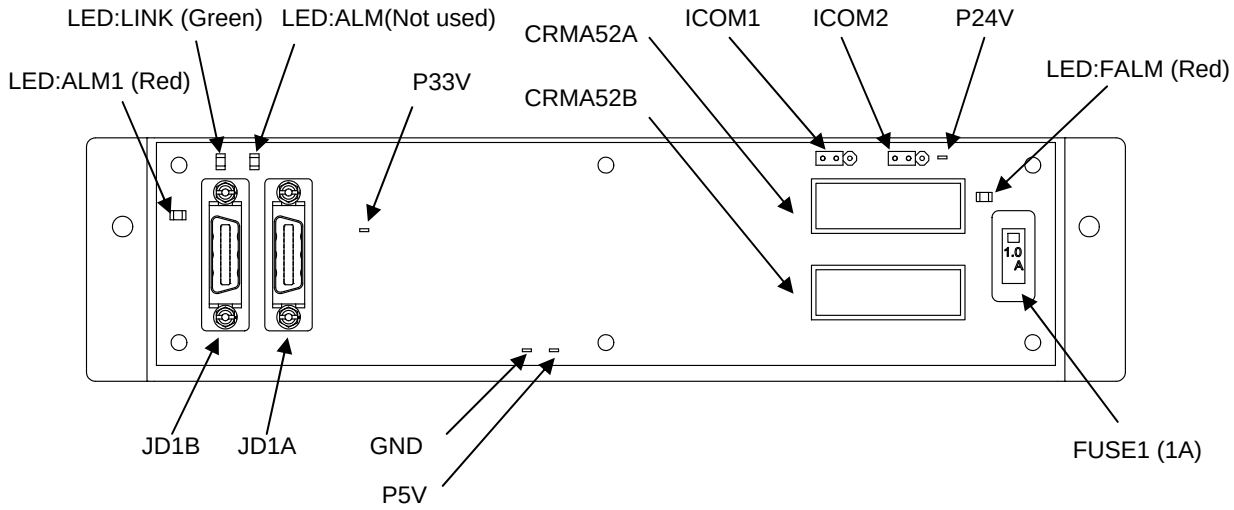

Fig.4.6 (b) Process I/O Board MA (Total edition 04B or later)

(1) Test pins

Name		Use
P24V	+24V	For measuring the DC supply voltage
P5V	+5V	
GND	GND	
P33V (Total edition 04B or later)	+3.3V	

(2) Settings

Name		Standard setting	Description
ICOM1	UDI1- 10 (Connector CRMA52A)	Side A	For common voltage setting Side A: +24V common Side B: 0V common
ICOM2	UDI11- 20 (Connector CRMA52B)		

(3) LEDs

Name	Color	Description
ALM1	Red	A communication alarm occurred between the main board and process I/O board.
FALM	Red	The fuse (FUSE1) on the process I/O board has blown.
LINK (Total edition 04B or later)	Green	Blink (1:3) Communication in progress ON = approx. 0.5 sec, OFF = approx. 1.5 sec
		Blink (1:1) Communication not in progress ON = approx. 0.25 sec, OFF = approx. 0.25 sec
ALM (Total edition 04B or later)	Red	Not used

4.7 PROCESS I/O BOARD MB (A20B-2101-0730, A20B-2101-0731)

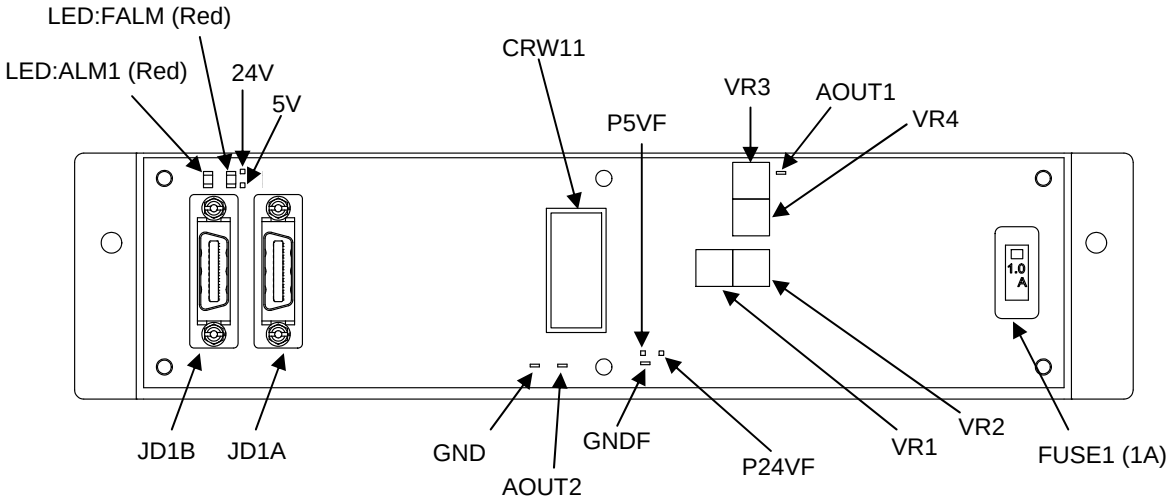

Fig.4.7 (a) Process I/O Board MB (Total edition 02A or earlier)

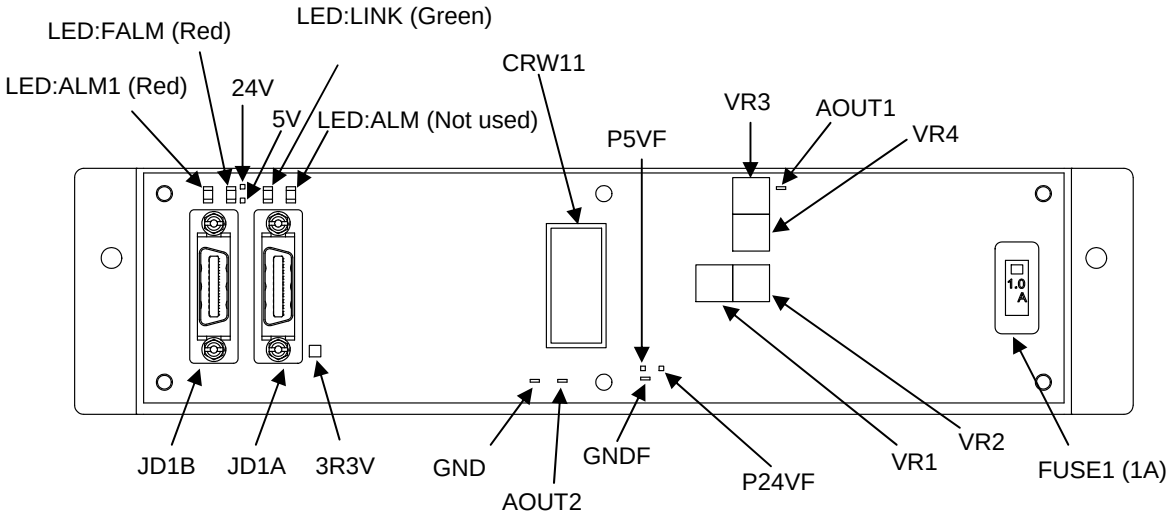

Fig.4.7 (b) Process I/O Board MB (Total edition 04B or later)

(1) Test pins and pads

Name		Use
24V 5V GND 3R3V (Total edition 04B or later)	+24V +5V GND +3.3V	For measuring the DC supply voltage
P24VF P5VF GNDF	+24V +5V GND	D/A converter power supply
AOUT1 AOUT2	Channel 1 Channel 2	For analog output signal (D/A) voltage measurement

(2) Adjustment

VR1/VR2 Channel 1 gain and offset adjustment

Connect the “+” and “-” terminals of a digital voltmeter, respectively, to the AOUT1 check pin and the GNDF check pin (not a general ground point). From the teach pendant, execute AOUT[1]=3413, using a robot program. While observing the voltage at the AOUT1 check pin with the digital voltmeter, adjust potentiometers VR1 and VR2 for 15.0V.

VR3/VR4 Channel 2 gain and offset adjustment

Connect the “+” and “-” terminals of a digital voltmeter, respectively, to the AOUT2 check pin and the GNDF check pin (not a general ground point). From the teach pendant, execute AOUT[2]=3413, using a robot program. While observing the voltage at the AOUT2 check pin with the digital voltmeter, adjust potentiometers VR3 and VR4 for 15.0V.

(3) LEDs

Name	Color	Description
ALM1	Red	A communication alarm occurred between the main CPU and process I/O board.
FALM	Red	The fuse (FUSE1) on the process I/O board has blown.
LINK (Total edition 04B or later)	Green	Blink (1:3) Communication in progress ON = approx. 0.5 sec, OFF = approx. 1.5 sec
		Blink (1:1) Communication not in progress ON = approx. 0.25 sec, OFF = approx. 0.25 sec
ALM (Total edition 04B or later)	Red	Not used

4.8 PROCESS I/O BOARD KA (A20B-2101-0560)

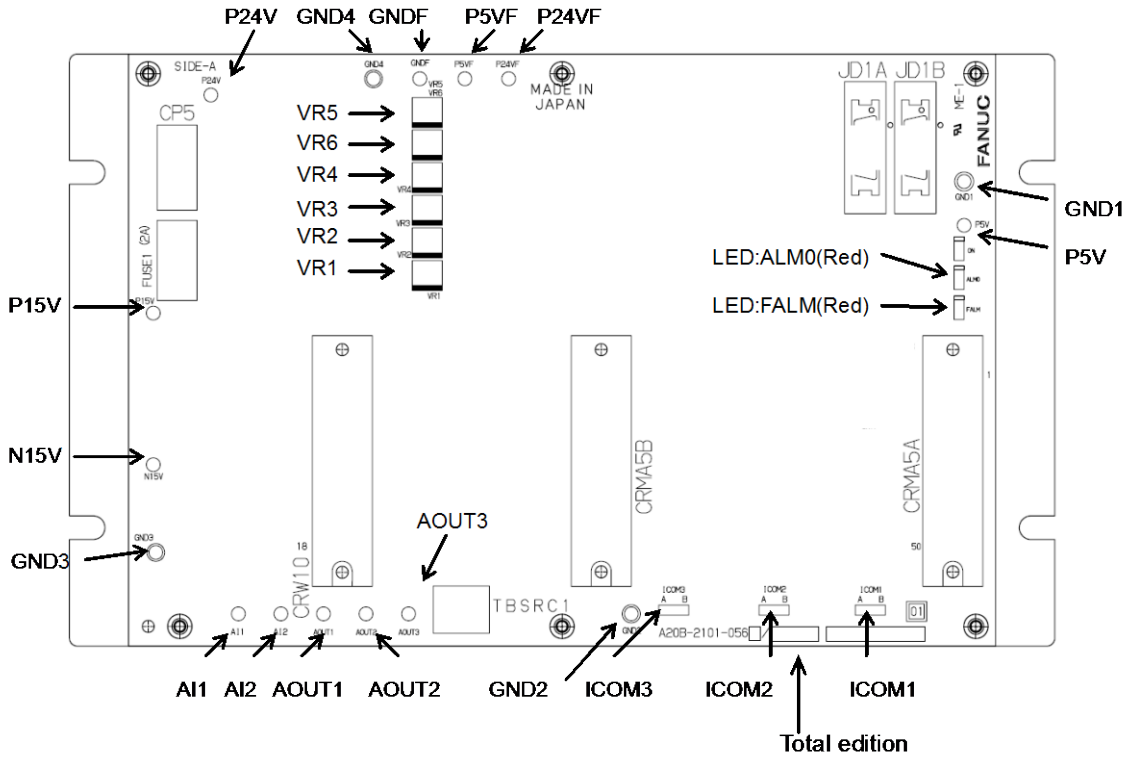

Fig.4.8 (a) Process I/O Board KA (Total edition 02A or earlier)

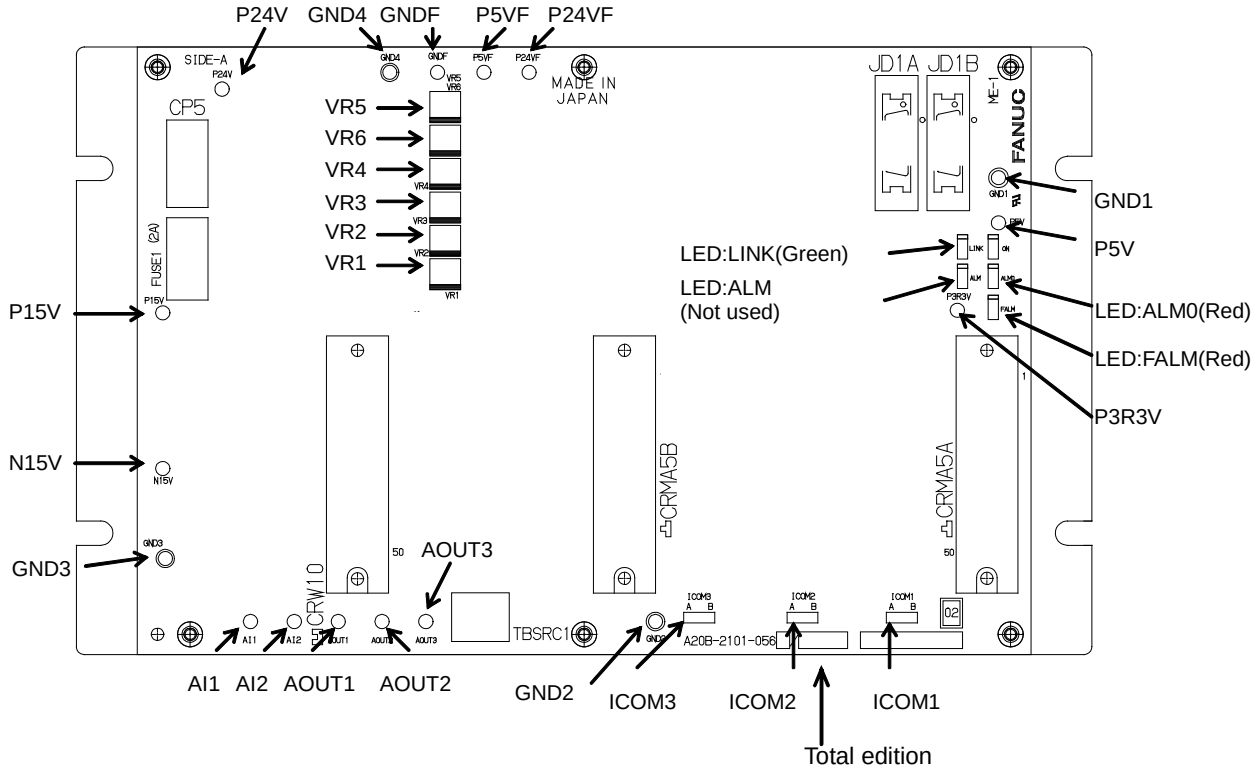

Fig.4.8 (b) Process I/O Board KA (Total edition 03B or later)

(1) Meanings of check pins

Name		Use
P24V	+24V	For DC power measurement
P5V	+5V	
P15V	+15V	
N15V	-15V	
GND1	GND	
GND2	GND	
GND3	GND	
GND4	GND	
P3R3V (Total edition 03B or later)	+3.3V	
P5VF	+5V	D/A converter power supply
P24VF	+24V	
GNDF	GND	
AI1	Channel 1	For analog input signal (A/D) voltage measurement
AI2	Channel 2	
AOUT1	Channel 1	For analog output signal (D/A) voltage measurement
AOUT2	Channel 2	
AOUT3	Channel 3	

(2) Setting

Name		Standard setting	Use
ICOM1	UDI1 to 20 (Connector CRMA5A)	Side A	For common voltage setting Side A: +24 V common Side B: 0 V common
ICOM2	UDI21 to 40 (Connector CRMA5B)		
ICOM3	WI01 to 08 (Connector CRW10)		

(3) Adjustment

VR1/VR2: Channel 1 gain and offset adjustment
Connect the "+" and "-" terminals of a digital voltmeter, respectively, to the AOUT1 check pin and the GNDF check pin (not a general ground point). From the teach pendant, execute AOUT [1]=3413, using a robot program. While observing the voltage at the AOUT1 check pin with the digital voltmeter, adjust potentiometers VR1 and VR2 for 15.0 V.

VR3/VR4: Channel 2 gain and offset adjustment
Connect the "+" and "-" terminals of a digital voltmeter, respectively, to the AOUT2 check pin and the GNDF check pin (not a general ground point). From the teach pendant, execute AOUT [2]=3413, using a robot program. While observing the voltage at the AOUT2 check pin with the digital voltmeter, adjust potentiometers VR3 and VR4 for 15.0 V.

VR5/VR6: Channel 3 gain and offset adjustment
Connect the "+" and "-" terminals of a digital voltmeter, respectively, to the AOUT3 check pin and the GNDF check pin (not a general ground point). From the teach pendant, execute AOUT [3]=3413, using a robot program. While observing the voltage at the AOUT3 check pin with the digital voltmeter, adjust potentiometers VR5 and VR6 for 15.0 V.

(4) Meaning of LEDs

	Color	Meaning
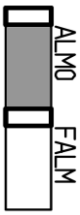	Red	A communication alarm occurred between the main CPU and the process I/O board.
	Red	The fuse (FUSE1) on the process I/O board has blown.
LINK (Total edition 03B or later)	Green	Blink (1:3) Communication in progress ON = approx. 0.5 sec, OFF = approx. 1.5 sec
		Blink (1:1) Communication not in progress ON = approx. 0.25 sec, OFF = approx. 0.25 sec
ALM (Total edition 03B or later)	Red	Not used

(5) Correspondence between driver ICs and DO signals

Driver IC specification: DRV1, DRV2: A76L-1151-0167
DV1: A76L-1151-0070

Driver IC name	DO signal name
DRV1	CMDENBL, SYSRDY, PROGRUN, PAUSED HELD, FAULT, ATPERCH, TPENBL BATALM, BUSY, ACK1/SNO1, ACK2/SNO2 ACK3/SNO3, ACK4/SNO4, ACK5/SNO5, ACK6/SNO6

Driver IC name	DO signal name
DRV2	ACK7/SNO7, ACK8/SNO8, SNACK, RESERVED DO01, DO02, DO03, DO04 DO05, DO06, DO07, DO08 DO09, DO10, DO11, DO12
DV1	DO13, DO14, DO15, DO16 DO17, DO18, DO19, DO20

4.9 PROCESS I/O BOARD KB (A20B-2101-0561)

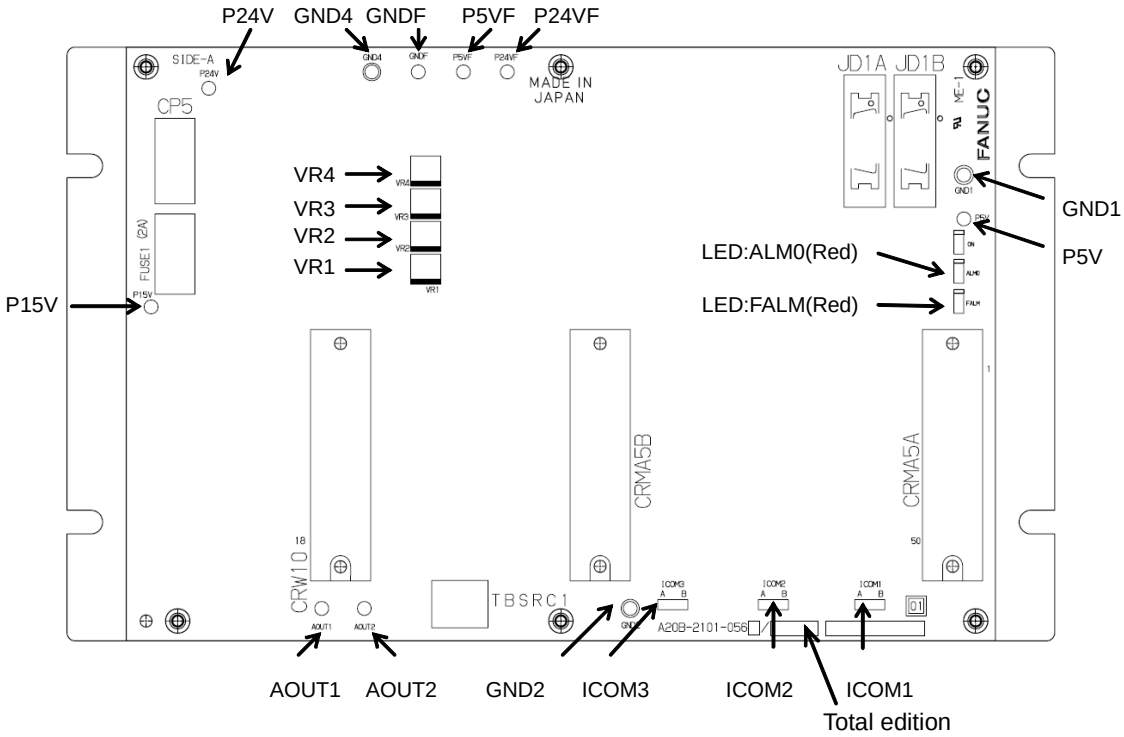

Fig.4.9 (a) Process I/O Board KB (Total edition 02A or earlier)

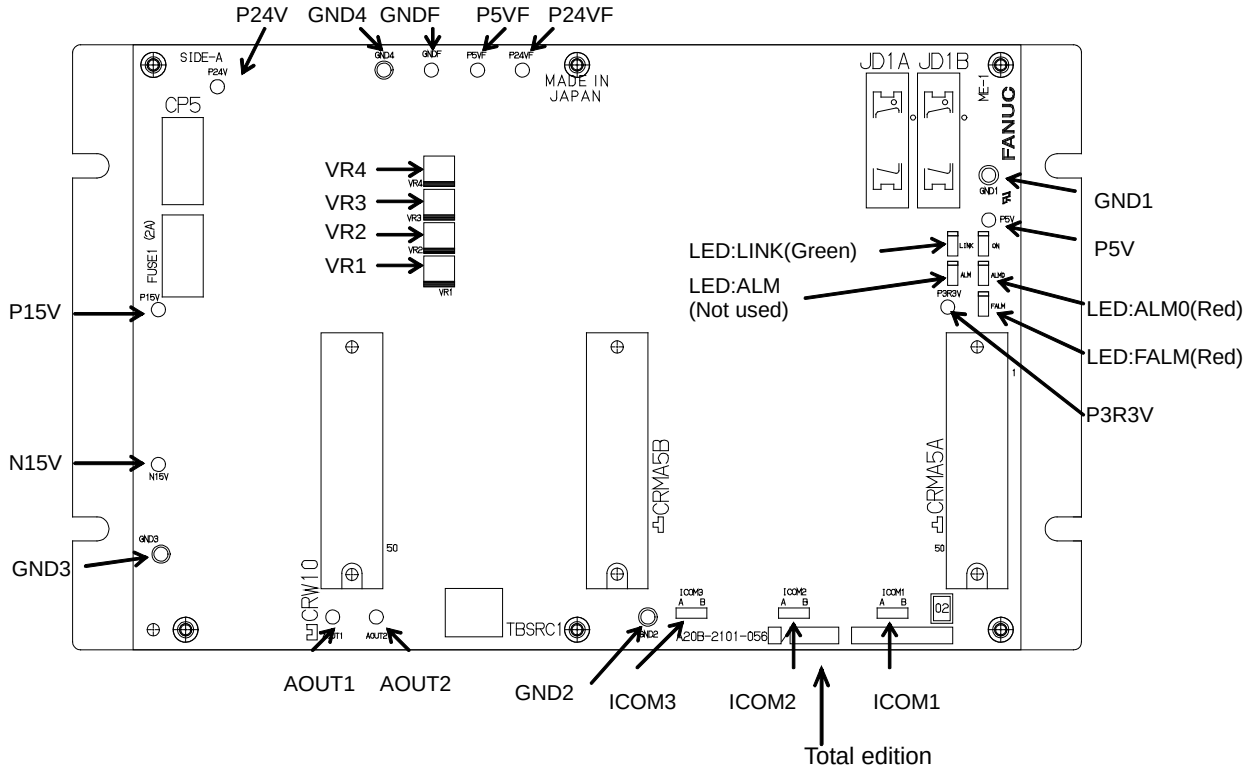

Fig.4.9 (b) Process I/O Board KB (Total edition 03B or later)

(1) Meanings of check pins

Name		Use
P24V P5V GND1 GND2 GND3 GND4 P3R3V (Total edition 03B or later)	+24V +5V GND GND GND GND +3.3V	For DC power measurement
P5VF P24VF GNDF	+5V +24V GND	D/A converter power supply
AOUT1 AOUT2	Channel 1 Channel 2	For analog output signal (D/A) voltage measurement

(2) Setting

Name		Standard setting	Use
ICOM1	UDI1 to 20 (Connector CRMA5A)	Side A	For common voltage setting Side A: +24 V common Side B: 0 V common
ICOM2	UDI21 to 40 (Connector CRMA5B)		
ICOM3	WI01 to 08 (Connector CRW10)		

(3) Adjustment

VR1/VR2: Channel 1 gain and offset adjustment

Connect the "+" and "-" terminals of a digital voltmeter, respectively, to the AOUT1 check pin and the GNDF check pin (not a general ground point). From the teach pendant, execute AOUT [1]=3413, using a robot program. While observing the voltage at the AOUT1 check pin with the digital voltmeter, adjust potentiometers VR1 and VR2 for 15.0 V.

VR3/VR4: Channel 2 gain and offset adjustment

Connect the "+" and "-" terminals of a digital voltmeter, respectively, to the AOUT2 check pin and the GNDF check pin (not a general ground point). From the teach pendant, execute AOUT [2]=3413, using a robot program. While observing the voltage at the AOUT2 check pin with the digital voltmeter, adjust potentiometers VR3 and VR4 for 15.0 V.

(4) Meaning of LEDs

	Color	Meaning
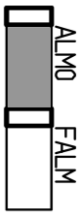	Red	A communication alarm occurred between the main CPU and the process I/O board.
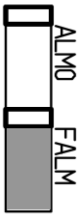	Red	The fuse (FUSE1) on the process I/O board has blown.
LINK (Total edition 03B or later)	Green	Blink (1:3) Communication in progress ON = approx. 0.5 sec, OFF = approx. 1.5 sec
		Blink (1:1) Communication not in progress ON = approx. 0.25 sec, OFF = approx. 0.25 sec
ALM (Total edition 03B or later)	Red	Not used

(5) Correspondence between driver ICs and DO signals

Driver IC specification: DRV1, DRV2: A76L-1151-0167
DV1: A76L-1151-0070

Driver IC name	DO signal name
DRV1	CMDENBL, SYSRDY, PROGRUN, PAUSED HELD, FAULT, ATPERCH, TPENBL BATALM, BUSY, ACK1/SNO1, ACK2/SNO2 ACK3/SNO3, ACK4/SNO4, ACK5/SNO5, ACK6/SNO6
DRV2	ACK7/SNO7, ACK8/SNO8, SNACK, RESERVED DO01, DO02, DO03, DO04 DO05, DO06, DO07, DO08 DO09, DO10, DO11, DO12
DV1	DO13, DO14, DO15, DO16 DO17, DO18, DO19, DO20

5 6-AXIS SERVO AMPLIFIERS

The 6-axis servo amplifiers are factory-set for operation. Usually, you do not need to set or adjust them. This chapter describes the standard settings and adjustment required if a defective 6-axis servo amplifier is replaced. It also describes the use of test pins and meanings of the LED indications.

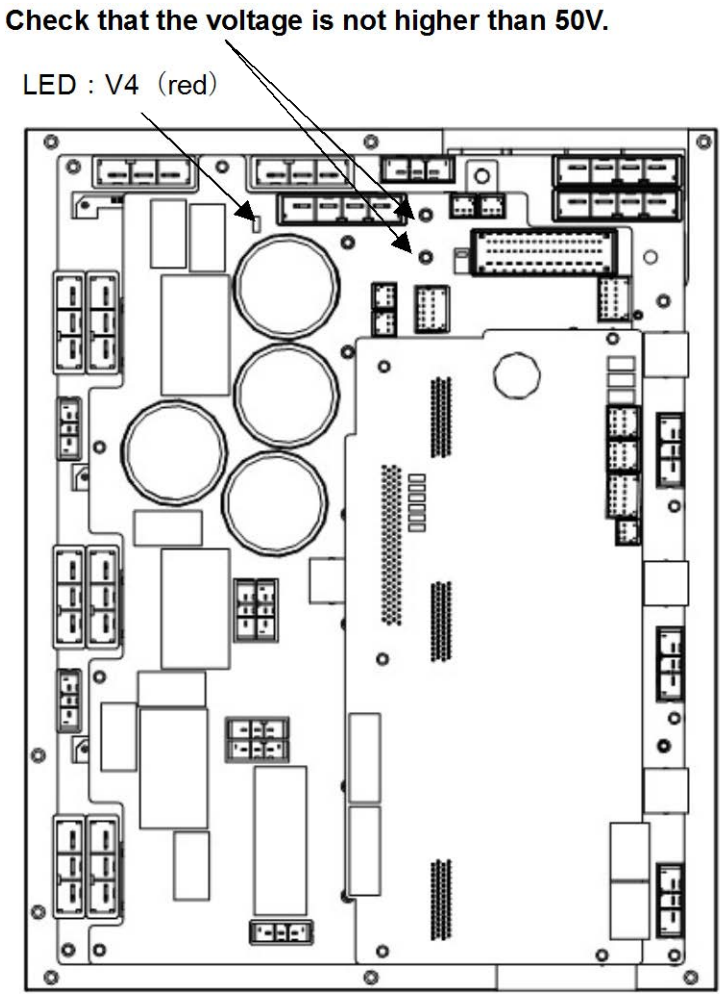

⚠ **WARNING**
Before touching the 6-axis servo amplifier, for example, for maintenance purposes, check the voltage at the screw above the LED “V4” with a DC voltage tester to see if the remaining voltage is not higher than 50V.

5.1 LEDS OF 6-AXIS SERVO AMPLIFIER

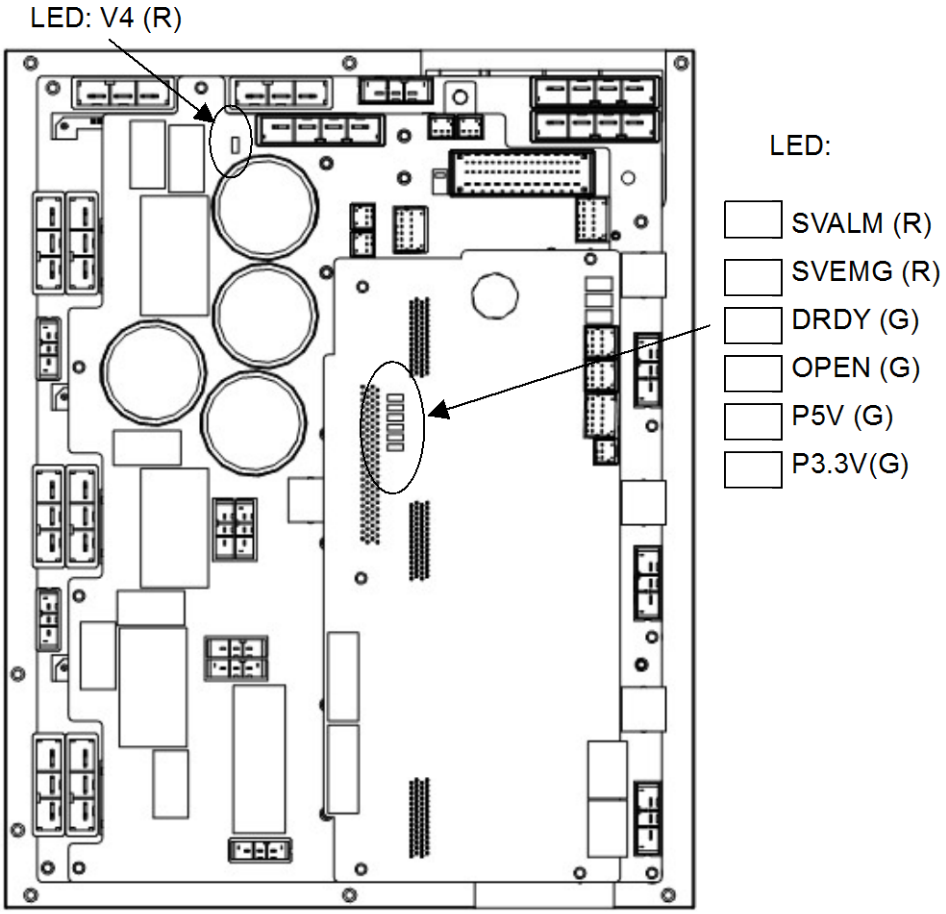

LED	Color	Description
V4	Red	Lights when the DCLINK circuit inside the 6-axis servo amplifier is charged to reach a specific voltage.
SVALM	Red	Lights when the 6-axis servo amplifier detects an alarm.
SVEMG	Red	Lights when an emergency stop signal is input to the 6-axis servo amplifier.
DRDY	Green	Lights when the 6-axis servo amplifier is ready to drive the servo motor.
OPEN	Green	Lights when the communication between the 6-axis servo amplifier and the main board is normal.
P5V	Green	Lights when the power supply circuit inside the 6-axis servo amplifier outputs a voltage of +5 V normally.
P3.3V	Green	Lights when the power supply circuit inside the 6-axis servo amplifier outputs a voltage of +3.3 V normally.

5.2 SETTING OF 6-AXIS SERVO AMPLIFIER

Table 5.2 Setting of 6-axis servo amplifier

Name	Standard setting	Description
COM1	Side A	Robot Digital Input (RI) device common voltage. Side A: +24V common Side B: 0V common

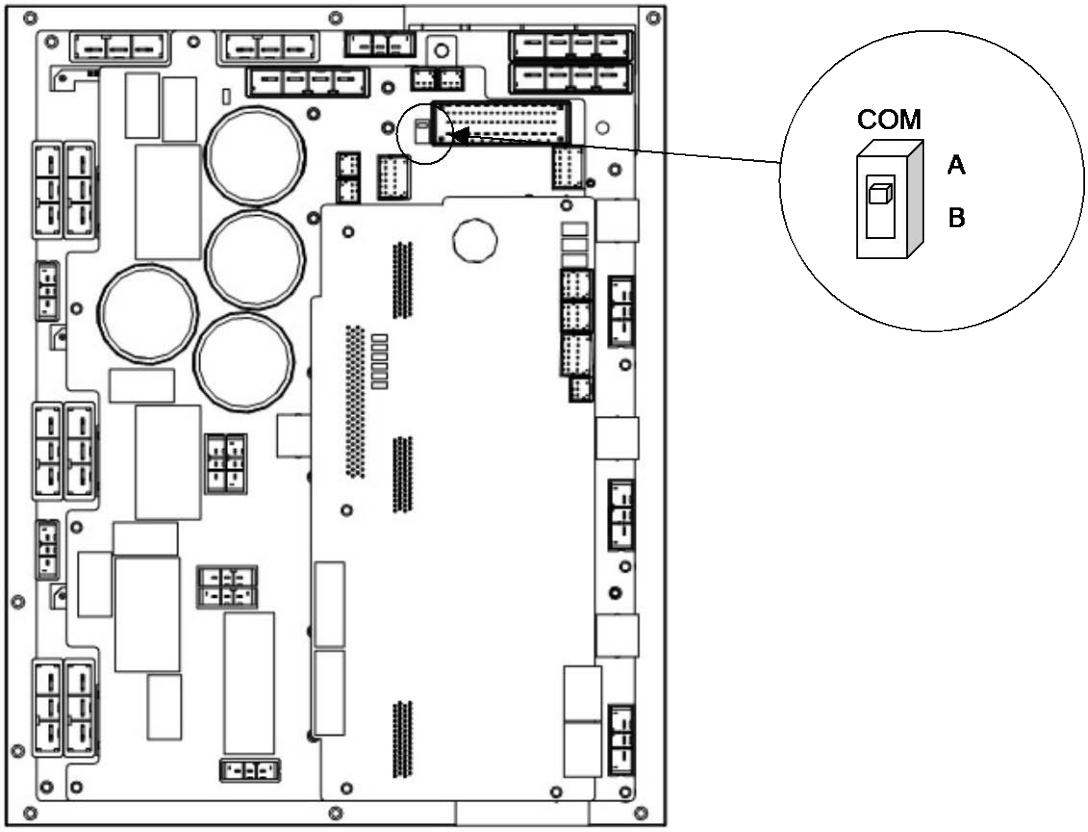

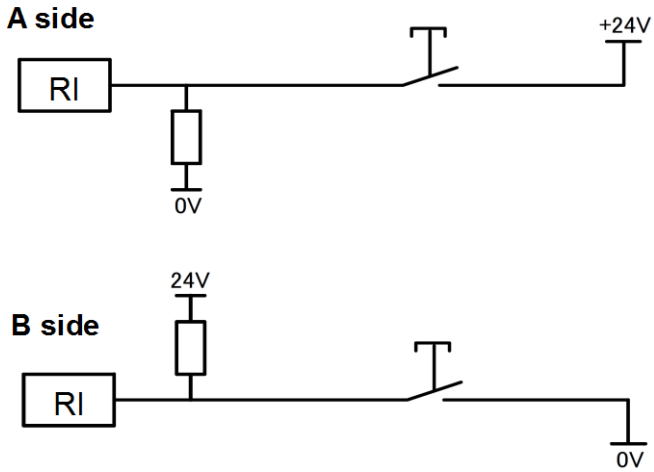

Fig.5.2(a) Circuit based on jumper pin location or setting of switch

5.3 6-AXIS SERVO AMPLIFIER SPECIFICATIONS

SPECIFICATIONS TABLE：（A06B-6400-H***）

UNIT		A06B-6400-H101	A06B-6400-H102	A06B-6400-H002
INPUT RATINGS	VOLTAGE	AC200 to AC240V (+10% / -15%), 50/60Hz, 3phase		
	POWER CAPACITY	5.6KVA	5.1KVA	5.1KVA
OUTPUT RATINGS	MAXIMUM OUTPUT	240V to		
	CURRENT：J1	160Ap / 36.5Arms	80Ap / 23.0Arms	80Ap / 23.0Arms
	CURRENT：J2	160Ap / 36.5Arms	80Ap / 23.0Arms	80Ap / 23.0Arms
	CURRENT：J3	160Ap / 36.5Arms	80Ap / 23.0Arms	80Ap / 23.0Arms
	CURRENT：J4	40Ap / 13.4Arms	40Ap / 13.4Arms	40Ap / 13.4Arms
	CURRENT：J5	40Ap / 13.4Arms	40Ap / 13.4Arms	40Ap / 13.4Arms
	CURRENT：J6	40Ap / 13.4Arms	40Ap / 13.4Arms	40Ap / 13.4Arms
	TOTAL CURRENT	125Arms	90Arms	90Arms

UNIT		A06B-6400-H003	A06B-6400-H004
INPUT RATINGS	VOLTAGE	AC200 to AC240V (+10% / -15%), 50/60Hz, 3phase	
	POWER CAPACITY	2.7KVA	2.0KVA
OUTPUT RATINGS	MAXIMUM OUTPUT	240V to	
	CURRENT：J1	40Ap / 13.4Arms	20Ap / 6.5Arms
	CURRENT：J2	40Ap / 13.4Arms	20Ap / 6.5Arms
	CURRENT：J3	20Ap / 6.5Arms	20Ap / 6.5Arms
	CURRENT：J4	20Ap / 6.5Arms	20Ap / 6.5Arms
	CURRENT：J5	20Ap / 6.5Arms	20Ap / 6.5Arms
	CURRENT：J6	20Ap / 6.5Arms	20Ap / 6.5Arms
	TOTAL CURRENT	52.8Arms	39Arms

UNIT		A06B-6400-H005
INPUT RATINGS	VOLTAGE	AC200 to AC240V (+10% / -15%), 50/60Hz,3/1phase
	POWER CAPACITY	1.3/1.4 (3/1phase)
OUTPUT RATINGS	MAXIMUM OUTPUT	240V to
	CURRENT：J1	20Ap / 3.6Arms
	CURRENT：J2	20Ap / 3.6Arms
	CURRENT：J3	20Ap / 3.6Arms
	CURRENT：J4	20Ap / 3.6Arms
	CURRENT：J5	10Ap / 2.0Arms
	CURRENT：J6	10Ap / 2.0Arms
	TOTAL CURRENT	18.4Arms

Table 5.3 (a) Controller specification table (Resistor discharge)

ROBOT	SERVO AMPLIFIER	CABINET	DISCHARGE RESISTOR	TRANSFORMER
M-900*i*A/400L,600 M-900*i*B/700,400L	A06B-6400-H101(AMP1) A06B-6240-H209(AMP2) A06B-6240-H105(AMP3)	B	A: — B: A05B-2603-C100	13kVA
R-2000*i*B/200T,220U,220US R-2000*i*C/190U,210L,210WE, 220U,270F, 270R, M-900*i*A/260L,350, M-410*i*B, M-410*i*C M-900*i*B/280,280L,330L,360	A06B-6400-H101	A/B	A: A05B-2601-C102 B: A05B-2603-C100	10.5kVA
M-900*i*A/150P	A06B-6400-H101	A/B	A: — B: A05B-2603-C100	10.kVA
R-2000*i*B/100P, R-2000*i*C/100P	A06B-6400-H102	A/B	A: — B: A05B-2603-C100	10.5kVA
M-420*i*A, M-421*i*A, M-710*i*C/50H	A06B-6400-H102	A/B	A: A05B-2601-C102 B: A05B-2603-C100	7.5kVA
R-1000*i*A(Except/80H, 120F-7B,130F) R-2000*i*C/165R,210R, M-710*i*C(Except/50H) R-2000*i*B(Except/200T,220U, 220US,100P)	A06B-6400-H102	A/B	A: A05B-2601-C100 B: A05B-2603-C100	7.5kVA
M-20*i*A, M-20*i*B ARC Mate 120*i*C	A06B-6400-H102	A/B	A: A05B-2601-C100 B: A05B-2603-C100	3kVA
M-3*i*A	A06B-6400-H102	A	A: A05B-2601-C100 B: —	7.5kVA
CR-35*i*A	A06B-6400-H102	A	A: A05B-2601-C100 B: —	3kVA
R-1000*i*A/80H R-1000*i*A/120F-7B,130F	A06B-6400-H102	A/B	A: A05B-2601-C102 B: A05B-2603-C100	10.5kVA
R-2000*i*C/125L,165F,210F R-2000*i*D/100FH,165FH, 210FH,	A06B-6400-H002	A/B	A: A05B-2601-C100 B: A05B-2603-C100	7.5kVA
M-20*i*D, ARC Mate 120*i*D	A06B-6400-H002	A/B	A: A05B-2601-C100 B: A05B-2603-C100	3kVA
M-2*i*A	A06B-6400-H002	A	A: A05B-2601-C100 B: —	7.5kVA
ARC Mate 100*i*C, M-10*i*A ARC Mate 100*i*D, M-10*i*D	A06B-6400-H003	A/B	A: A05B-2601-C100 B: A05B-2603-C100	3kVA
F-200*i*B	A06B-6400-H003	A/B	A: A05B-2601-C100 B: A05B-2603-C100	7.5kVA
CR-15*i*A	A06B-6400-H003	A	A: A05B-2601-C100 B: —	3kVA
M-430*i*A/4FH	A06B-6400-H004(AMP1) A06B-6240-H201(AMP2)	A/B	A: A05B-2601-C100 B: A05B-2603-C100	3kVA
M-430*i*A/2P,2PH	A06B-6400-H004(AMP1) A06B-6240-H301(AMP2)	A/B	A: A05B-2601-C100 B: A05B-2603-C100	3kVA
M-900*i*A/200P	A06B-6400-H101(Main,AMP1) A06B-6400-H101(2nd,AMP1)	B	A: — B: A05B-2603-C100	13kVA
M-2000*i*A	A06B-6400-H101(Main,AMP1) A06B-6240-H106(Main,AMP2) A06B-6400-H101(2nd,AMP1) A06B-6240-H106(2nd,AMP2)	A/B	A: — B: A05B-2603-C100	10.5kVA
CR-4*i*A, CR-7*i*A, CR-14*i*A LR Mate 200 *i*D	A06B-6400-H005	A	A: A05B-2601-C100 B: —	3kVA

Table 5.3 (b) Controller specification (Power supply regeneration)

ROBOT	SERVO AMPLIFIER	CABINET	POWER SUPPLY	DISCHARGE RESISTOR for PS	TRANS FORMER
M-900*i*A/400L,600 M-900*i*B/700,400L	A06B-6400-H101(AMP1) A06B-6240-H209(AMP2) A06B-6240-H105(AMP3)	B	A06B-6200-H037	A: — B: A05B-2603-C101	13kVA
R-2000*i*B/200T, 220U,220US R-2000*i*C/190U, 210L,210WE, 220U,270F,270R, M-900*i*A/260L,350, 150P M-410*i*C, M-410*i*B M-900*i*B/280,280L, 330L,360	A06B-6400-H101	A/B	A06B-6200-H015	A: A05B-2601-C101 B: A05B-2603-C101	10.5kVA
R-1000*i*A(Except /80H,120F-7B,130F) R-2000*i*C/165R, 210R R-2000*i*B(Except /200T,220U,220US,100P) M-420*i*A, M-421*i*A M-710*i*C,	A06B-6400-H102	A/B	A06B-6200-H015	A: A05B-2601-C101 B: A05B-2603-C101	7.5kVA
M-3*i*A	A06B-6400-H102	A	A06B-6200-H015	A: A05B-2601-C101 B: —	7.5kVA
R-1000*i*A/80H R-1000*i*A/120F-7B, 130F R-2000*i*B/100P R-2000*i*C/100P	A06B-6400-H102	A/B	A06B-6200-H015	A: A05B-2601-C101 B: A05B-2603-C101	10.5kVA
R-2000*i*C/125L, 165F,210F R-2000*i*D/100FH, 165FH,210FH	A06B-6400-H002	A/B	A06B-6200-H015	A: A05B-2601-C101 B: A05B-2603-C101	7.5kVA
M-2*i*A	A06B-6400-H002	A	A06B-6200-H015	A: A05B-2601-C101 B: —	7.5kVA
M-900*i*A/200P	A06B-6400-H101(Main,AMP1) A06B-6400-H101(2nd,AMP1)	B	A06B-6200-H037	A: — B: A05B-2603-C101	13kVA
M-2000*i*A	A06B-6400-H101(Main,AMP1) A06B-6240-H106(Main,AMP2) A06B-6400-H101(2nd,AMP1) A06B-6240-H106(2nd,AMP2)	A/B	A06B-6200-H015	A: A05B-2601-C101 B: A05B-2603-C101	10.5kVA

NOTE

Table 5.3 is based on the standard configuration.

6 POWER SUPPLY

Setting and adjustment of the power supply is factory-set for operation. Usually, you do not need to set or adjust it.

6.1 BLOCK DIAGRAM OF THE POWER SUPPLY

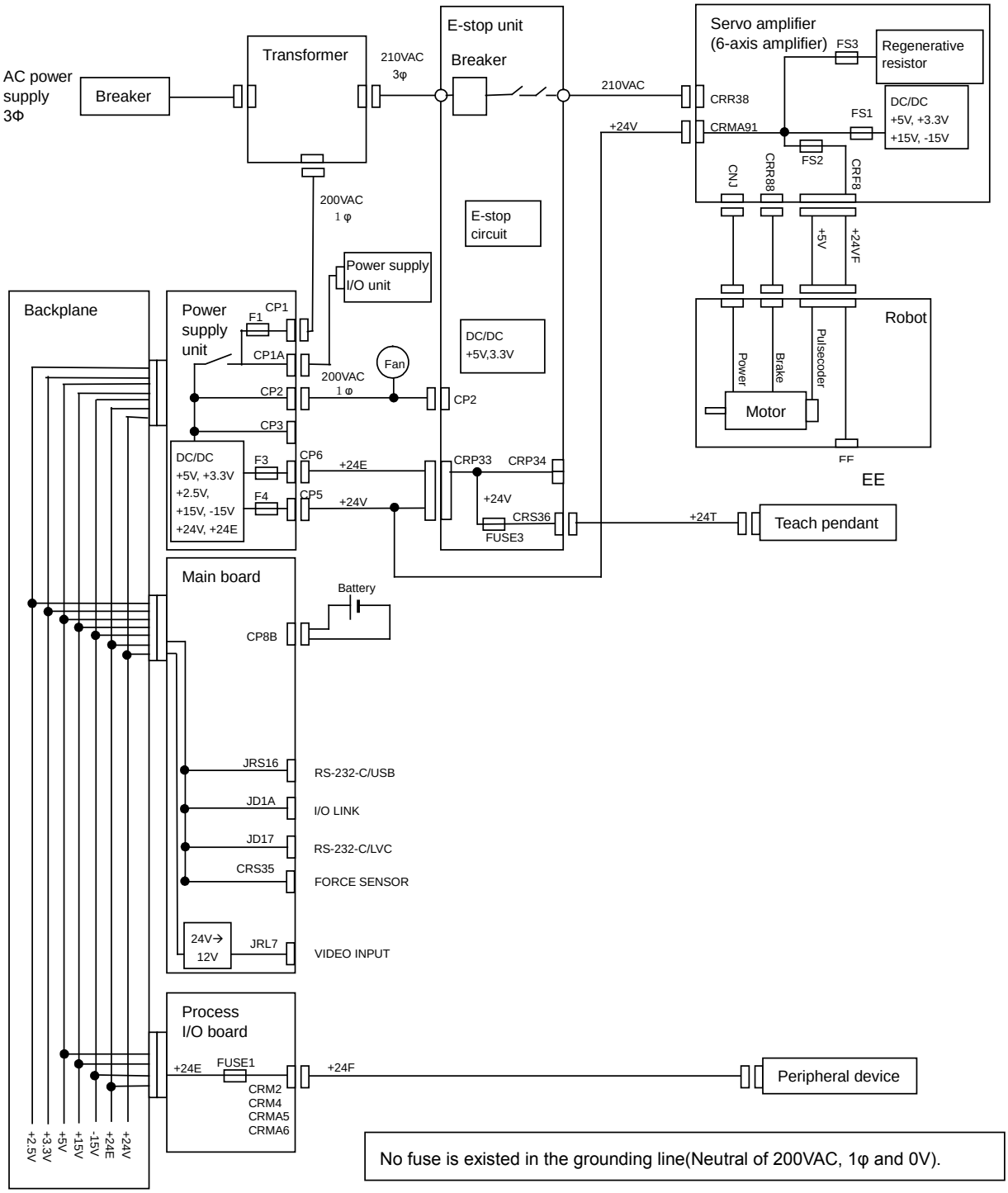

Fig.6.1 (a) Block diagram of the power supply (R-30*i*B)

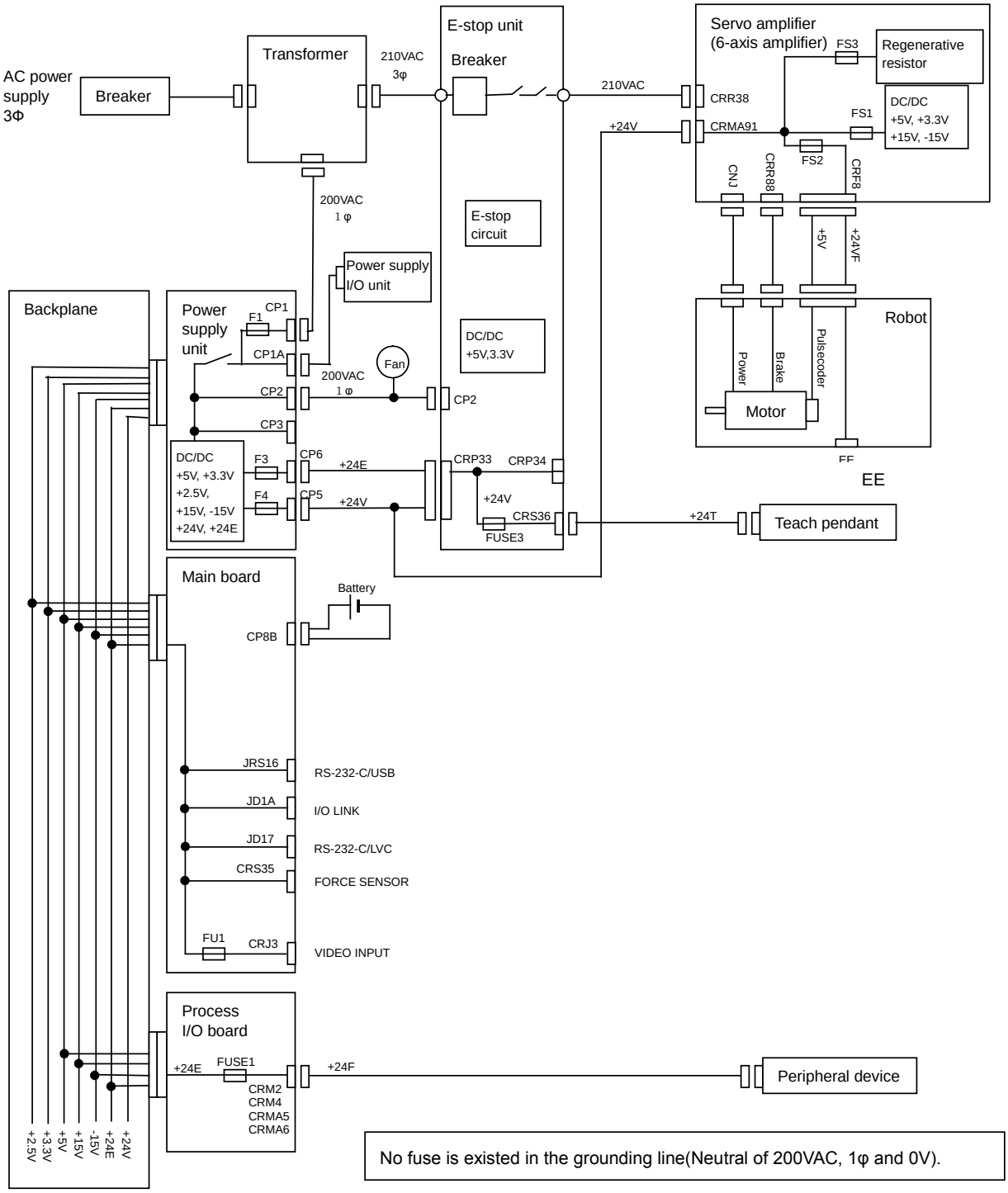

Fig.6.1 (b) Block diagram of the power supply (R-30*i*B Plus)

6.2 TRANSFORMER

Select a transformer and tap according to the supply voltage. Select a transformer tap based on the rated voltage.

A-cabinet

	Rated voltage	Transformer specification			
		13.0KVA	10.5KVA	7.5KVA	3KVA
TYPE E	500 to 575		A80L-0028-0024#A	A80L-0026-0040#A	A80L-0024-0028
	440 to 500				
	380 to 415				
TYPE D	200 to 230		A80L-0028-0027#A	A80L-0026-0041#A	A80L-0024-0029
	380 to 400				

B-cabinet

	Rated voltage	Transformer specification			
		13.0KVA	10.5KVA	7.5KVA	3KVA
TYPE E	500 to 575	A80L-0028-0025	A80L-0028-0024	A80L-0026-0040	A80L-0024-0028
	440 to 500				
	380 to 415				
TYPE D	200 to 230	A80L-0028-0028	A80L-0028-0027	A80L-0026-0041	A80L-0024-0029
	380 to 400				

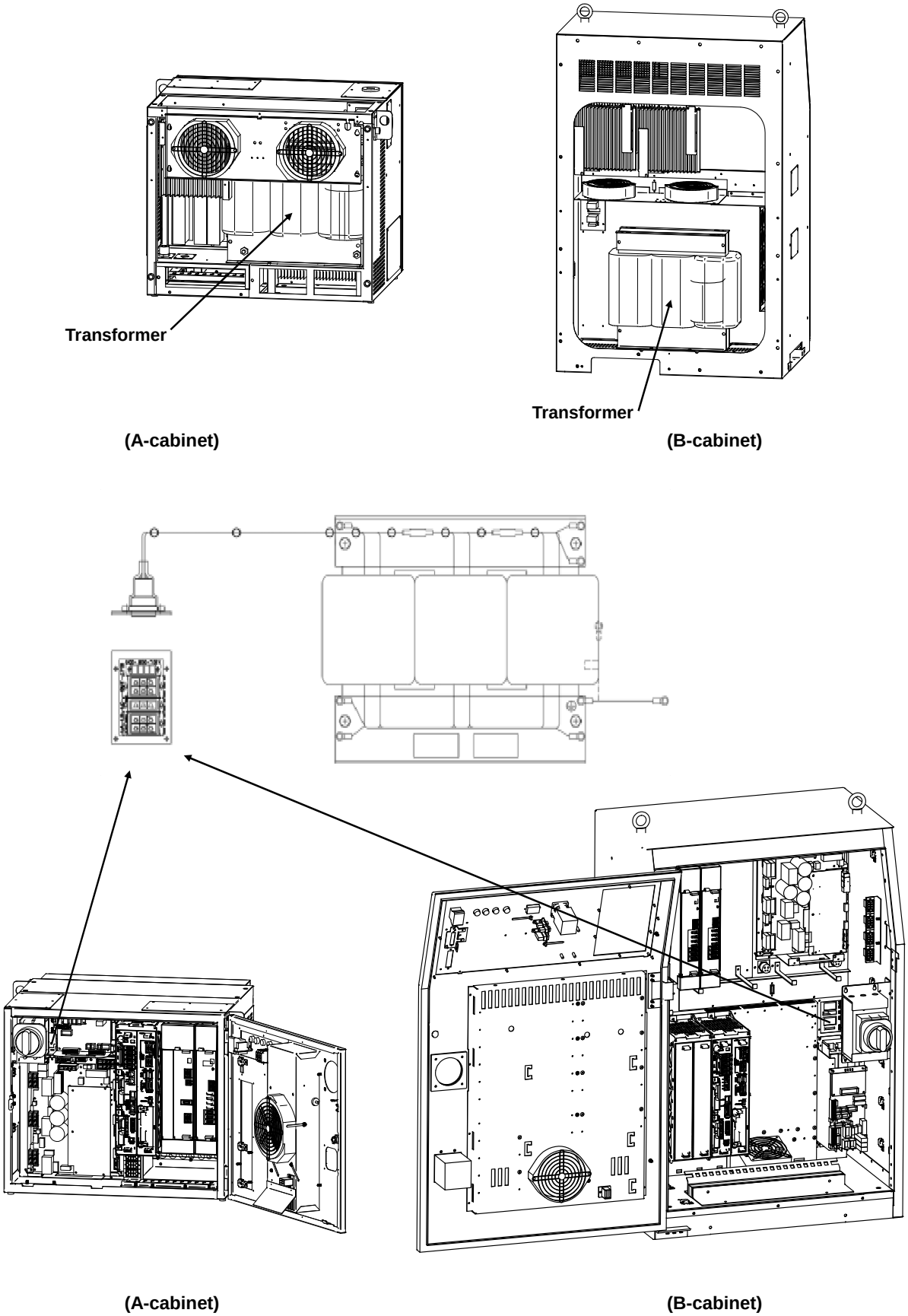

Fig.6.2 (a) Transformer mounting locations and structure

Cabinet side connector

1. TYPE E (500V-575V)

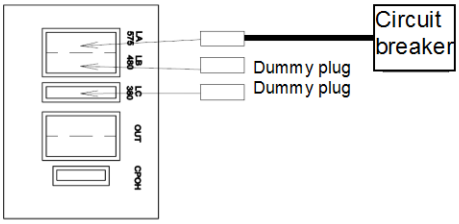

4. TYPE D (380V-400V)

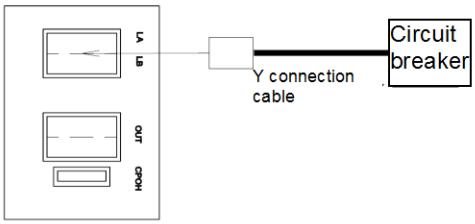

2. TYPE E (440V-500V)

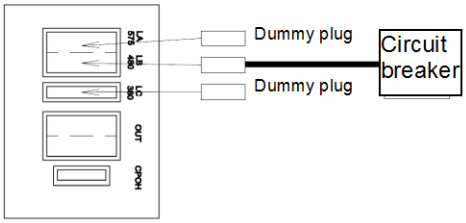

5. TYPE D (200V-230V)

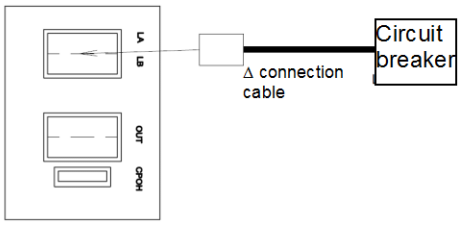

3. TYPE E (380V-415V)

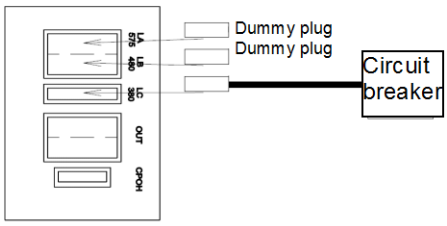

Fig.6.2(b) Setting the input voltage

1	Type E: 500-575V	Insert the connector connected to the circuit breaker into connector LA and the dummy plug into connectors LB and LC.
2	Type E: 440-500V	Insert the connector connected to the circuit breaker into connector LB and the dummy plug into connectors LA and LC.
3	Type E: 380-415V	Insert the connector connected to the circuit breaker into connector LC and the dummy plug into connectors LA and LB.
4	Type D: 380-400V	Insert the Y connection cable connected to the circuit breaker into connectors LA and LB.
5	Type D: 200-230V	Insert the Δ connection cable connected to the circuit breaker into connectors LA and LB.

⚠CAUTION
The secondary voltage of the transformer depends on the cable connection between a breaker and a transformer. Be careful to choose the correct connection if maintenance is necessary.

6.3 CHECKING THE POWER SUPPLY UNIT (A16B-2203-0910)

The power supply unit need not be set or adjusted.

Table 6.3 Rating of the Power supply unit

Output	Rated voltage	Tolerance
+5V	+5.1V	±3%
+3.3V	+3.3V	±3%
+2.5V	+2.5V	±3%
+24V	+24V	±5%
+24E	+24V	±5%
+15V	+15V	±10%
-15V	-15V	±10%

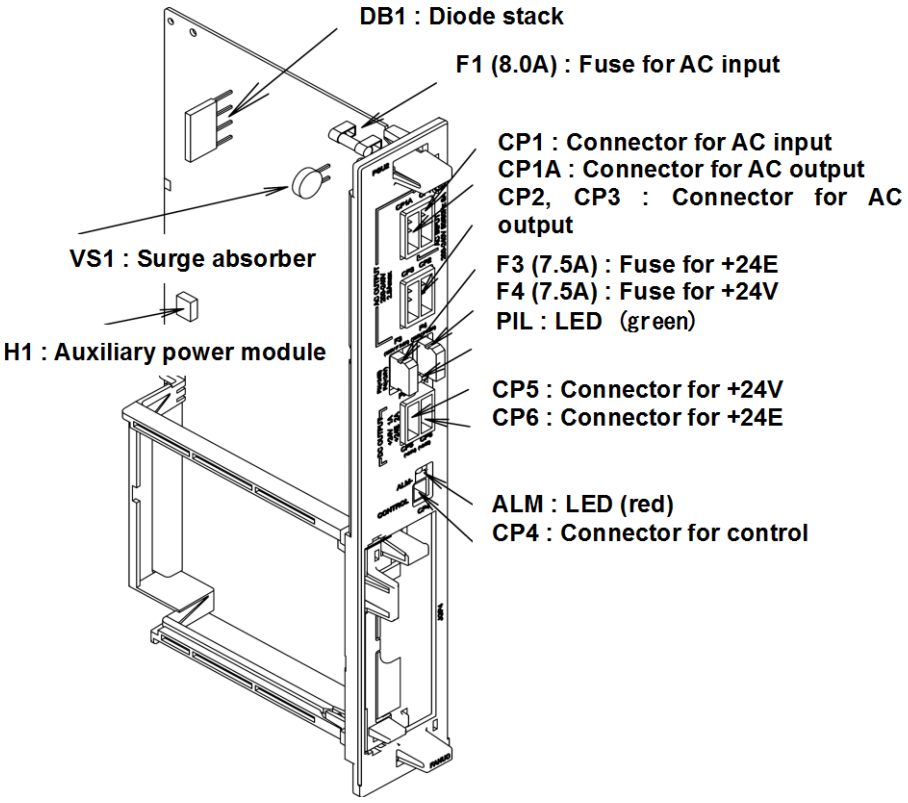

Fig.6.3(a) Interface of the power supply unit

7 SENSOR I/F UNIT FOR COLLABORATIVE ROBOT

Specification of sensor I/F unit: A05B-2600-C320

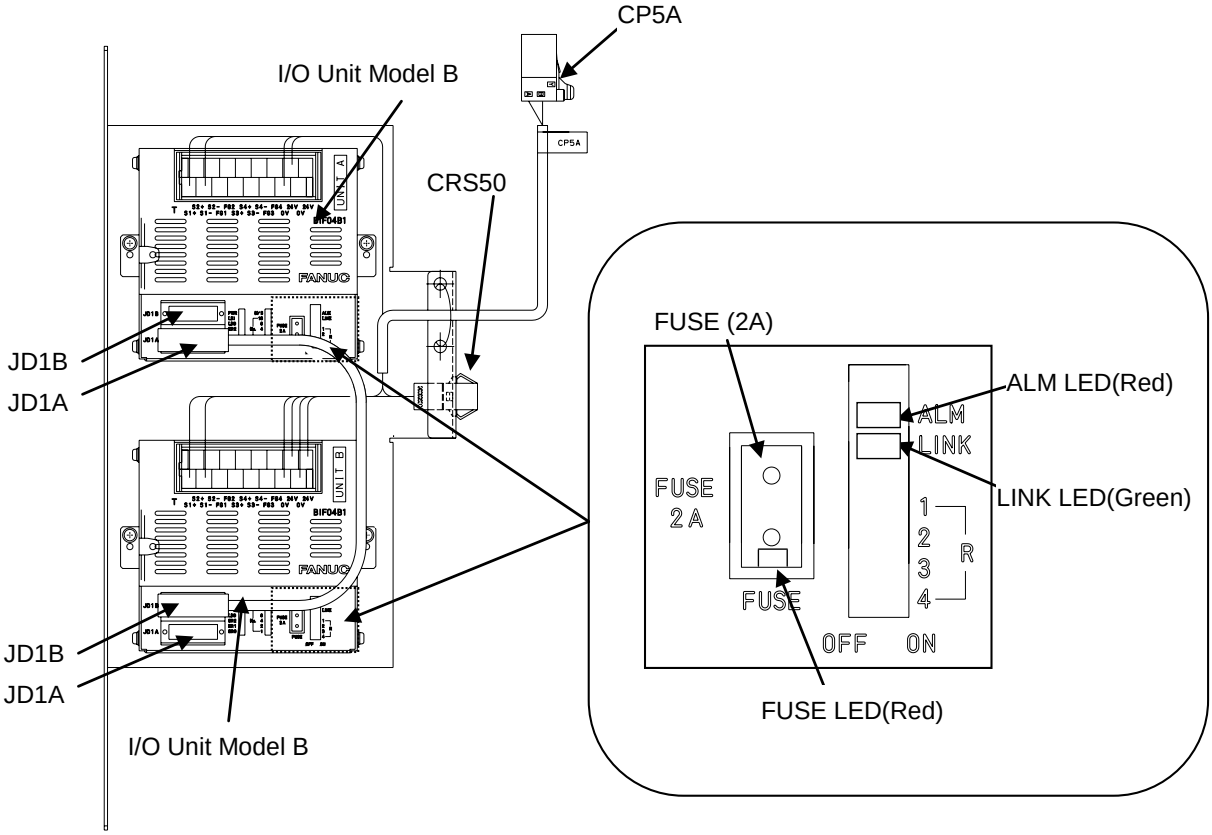

Fig.7(a) Sensor I/F unit for Collaborative Robot

8 REPLACING UNITS

This section explains how to replace each unit in the control section.

> ⚠ **WARNING**
> Before you start to replace a unit, be sure to turn off the controller main power. Also keep all machines in the area of the controller switched to off. Otherwise, you could injure personnel or damage equipment.

> ⚠ **WARNING**
> Before replacing components, be sure to read and follow procedures in the robot or controller-specific maintenance manual to understand replacement procedures. Performing an incorrect replacement procedure can lead to an unpredictable accident, resulting in breakage in the robot or personal injury.

> ⚠ **WARNING**
> When a heavy component or unit is to be handled, provide the workers with a crane or the like so as not to apply excessive loads to the workers. Note that incorrect handling can cause serious injury to the workers.

> ⚠ **CAUTION**
> Components in the controller heat up, so care should be taken. When you have to touch a heated component, use appropriate protective equipment such as heat-resistant gloves, a face shield, or body suit if necessary.

Before replacing a component, please refer to “SAFETY PRECAUTION” chapter and “FANUC Robot SAFETY HANDBOOK (B-80687EN)”of this manual.

8.1 REPLACING THE PRINTED-CIRCUIT BOARDS

> ⚠ **CAUTION**
> When you replace printed-circuit boards, observe the following cautions:
> 1 Keep the controller power switched off.
> 2 When you remove a printed-circuit board, do not touch the semiconductor devices on the board with your hand or make them touch other components.
> 3 Make sure that the replacement printed-circuit board has been set up appropriately. (Setting plug etc.)
> 4 After replacing a printed-circuit board, make adjustments correctly if the board needs to be adjusted.
> 5 If the backplane board, power supply unit, or main board (including cards and modules) is replaced, it is likely that robot parameters and taught data are lost. Before you start to replace these components, save a backup copy of the robot parameters and taught data to an external memory device.
> 6 In case you would be unable to recognize connect destinations, before you disconnect a cable, note its location. If a cable is detached for replacement, reconnect it exactly as before.

8.1.1 Replacing the Backplane Board (Unit)

When replacing the backplane board, do so together with the plastic rack.

(1) Detach the cables from the power unit and boards on the backplane board.

> ⚠ **CAUTION**
> When you replace the main board, be sure that the voltage of the battery is good (3.1-3.3VDC) and it is installed correctly. Be careful of static electricity during the replacement. USE STATIC PROTECTION.

(2) Remove the power supply unit and boards from the backplane (rack) (See Section 8.1.2).
(3) Detach the grounding cable from the backplane unit.
(4) Loosen the retaining screws in the upper section of the rack. Remove the retaining screws from the lower section of the rack.
(5) Slide the rack up and out.
(6) To replace the backplane and rack, reverse steps (1) - (5).

> ⚠ **CAUTION**
> There is a possibility of data loss when a backplane- mounted printed circuit board is replaced. Be sure to back up all program and setup data on an external device such as a memory card before proceeding.

8.1.2 Replacing the Power Unit and Printed-Circuit Boards on the Backplane

The backplane incorporates the power unit, main board, and option boards.
There are two types of option boards: Full-size board and mini-size board. A full-size board occupies one slot. A mini-size board uses part of a full-size board.

> ⚠ **CAUTION**
> Before starting replacement, turn off the controller main power. The main board is equipped with battery-backed memory devices for holding robot parameters and taught data. When the main board is replaced, the data in the memory devices is lost.

(1) Detach the cable from the power supply unit or the printed-circuit board, whichever is to be replaced.
(2) Pinch the barbed handles on the upper and lower sections of the board to unlatch it, then pull it toward you.
(3) Place the replacement power supply unit or printed-circuit board on the rail in the appropriate slot of the rack, then push it in gently by the handles until it is latched.
(4) There are two rails in the main board SLOT (slot 1).
When inserting the main board, align it to the right-side rail.
(5) There are two rails in slot 3 (slots for a full-size option board). When you insert a full-size option board, align it to the left-side rail.

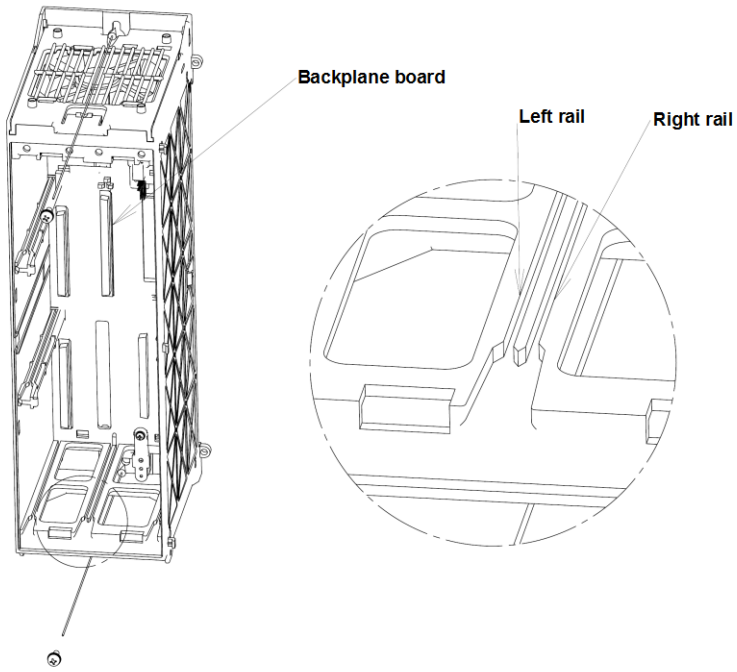

Fig.8.1.2 (a) Replacing the backplane board

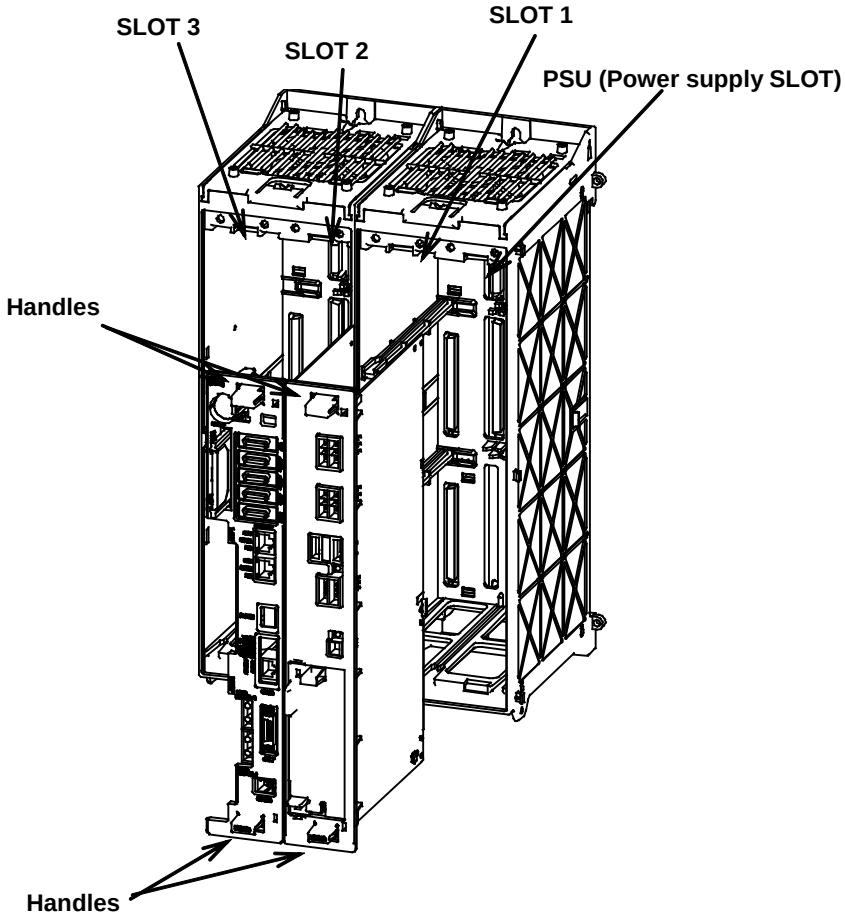

Fig.8.1.2 (b) Replacing the power unit and printed-circuit boards on the backplane

8.2 REPLACING CARDS AND MODULES ON THE MAIN BOARD

> ⚠ **CAUTION**
> Before you start to replace a card or module, make a backup copy of robot parameters and taught data. If the FROM/SRAM module is replaced, SRAM memory contents are lost.

Demounting a Card

1. Pull up the spacer metal fitting. (Fig. 8.2 (a))
2. Insert a finger into the rear of the card and pull up the card slowly in the arrow direction. (Fig. 8.2 (b)) (Note: At this time, hold the main board on the opposite side with the other hand whenever possible. A force of 7 to 8 kgf is required for extraction. Hold carefully so as not to drop the card board due to the extra force.)
3. When one side of the card board is raised slightly by pulling up, do not fully extract the card board, but push back the card softly.
4. When the card board is pushed back to be parallel with the main board, pinch two sides of the card board and pull up the card board. This completes the extraction of the card board.

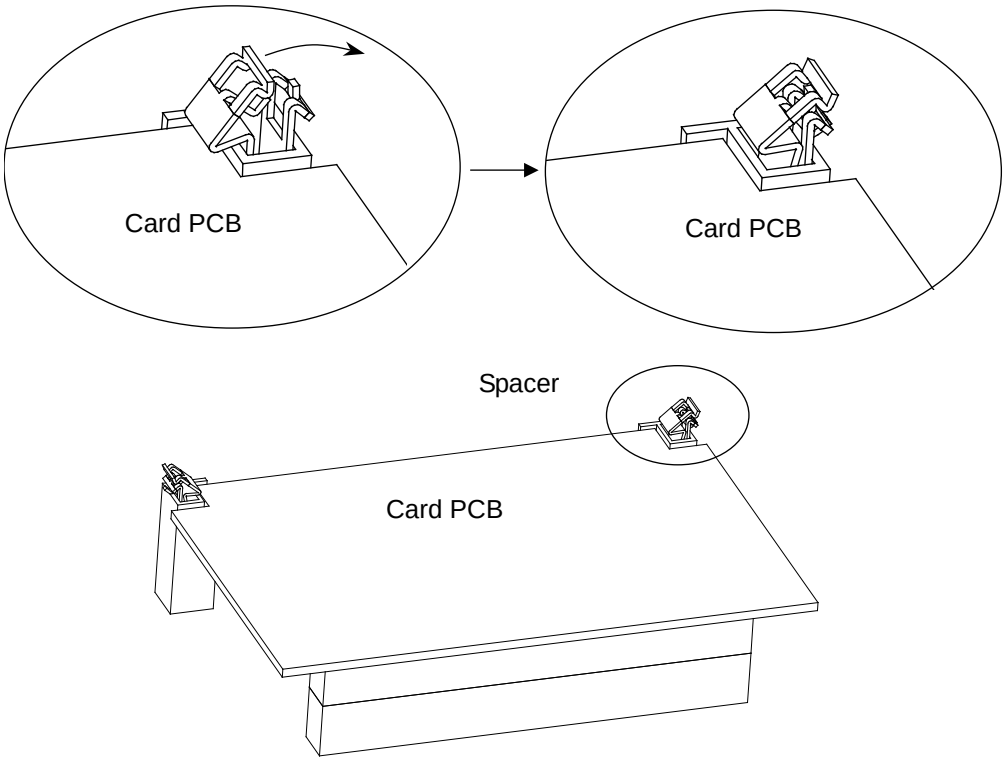

Fig.8.2 (a) Demounting a card on the main board

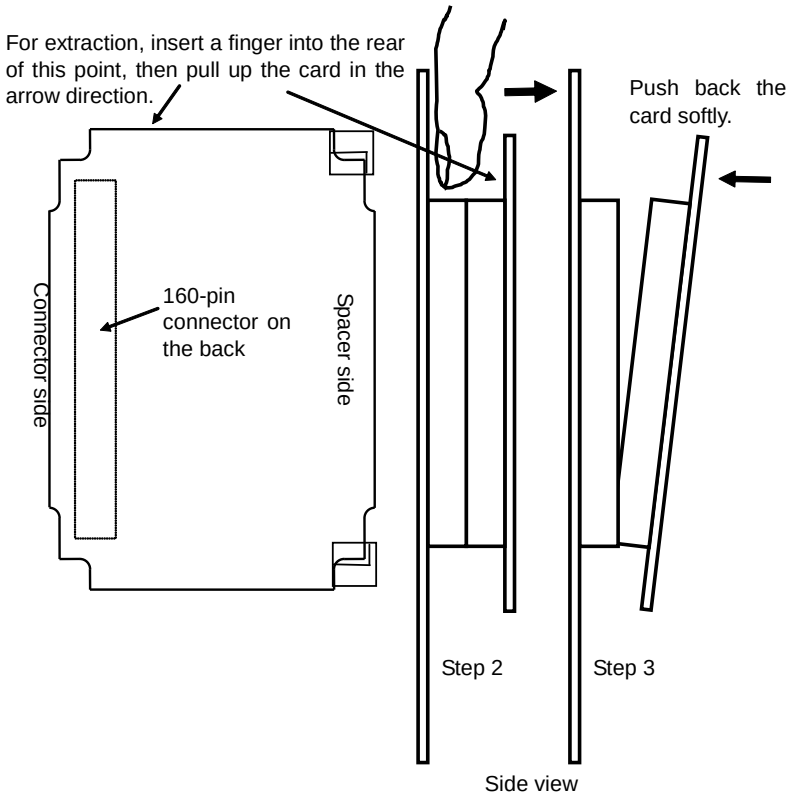

Fig.8.2 (b) Demounting a card on the main board

Mounting a Card

1. Check that the metal fittings of the spacers are raised. (Fig.8.2 (c))
2. To align the board insertion position, touch the spacer end faces of the board with the spacer. (Fig. 8.2 (d)) (At this time, the board is touching the spacers only.)
3. While aligning the board with the spacers, lower the connector side slowly until the connectors touch each other. (Fig.8.2 (d)) (Do not press until aligned.)
4. The mating position can be determined more easily by moving the card back and forth until the alignment “nubs” and “holes” are aligned on the connectors. The board must be turned to view the board connectors on the side. (Fig.8.2 (d))
5. Push the connector side of the card board slowly. At this time, push on the back of the board over the connector. The force required for connector insertion is about 10 kgf. If the connector will not insert with more than 10kgf, then it is likely that the positions are misaligned. Re-check the alignment of the connector to prevent damaging the connector(s). If installing a standard CPU CARD, do not press on the heat sink installed on the CPU and LSI chip. Otherwise, the CPU or LSI chip can be damaged. (Fig.8.2 (e))
6. Push in the spacer metal fitting to lock the board in place. (Fig.8.2 (f))

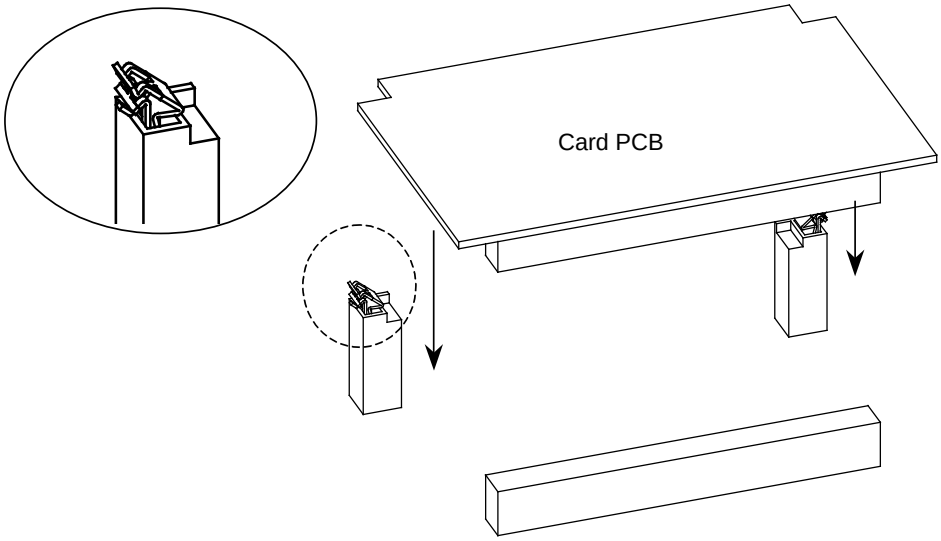

Fig.8.2 (c) Mounting a card on the main board

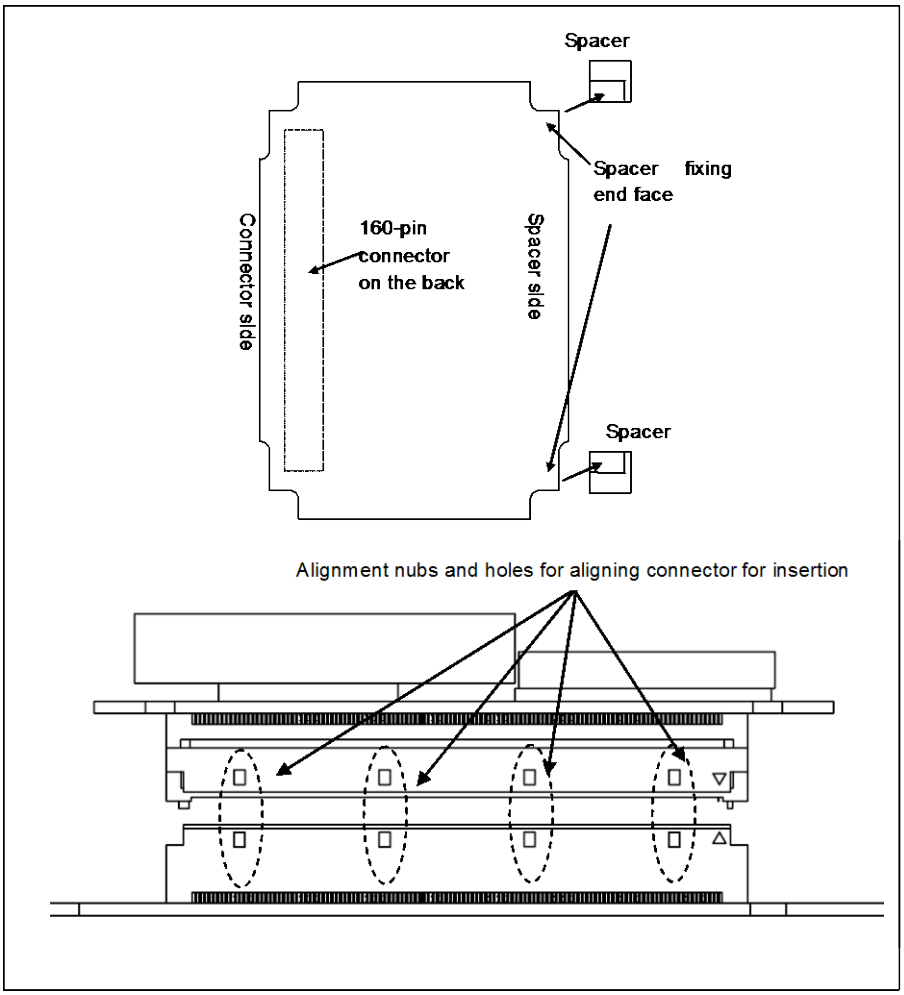

Fig.8.2 (d) Mounting a card on the main board

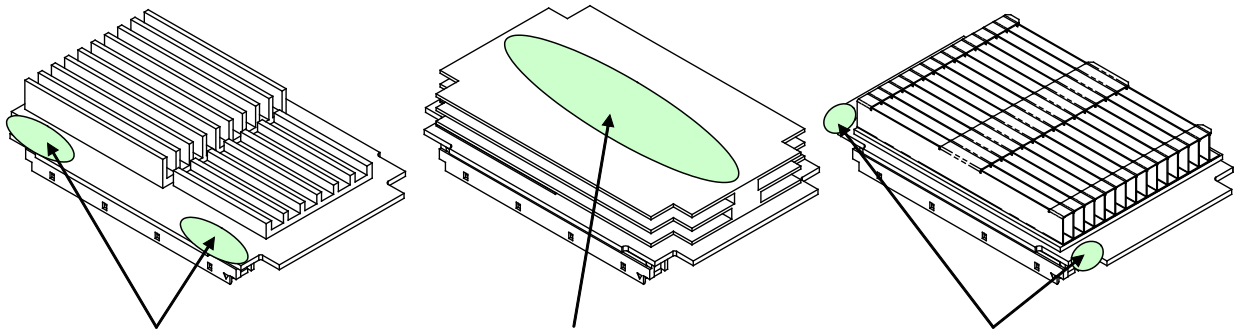

Fig.8.2 (e) Mounting a card on the main board

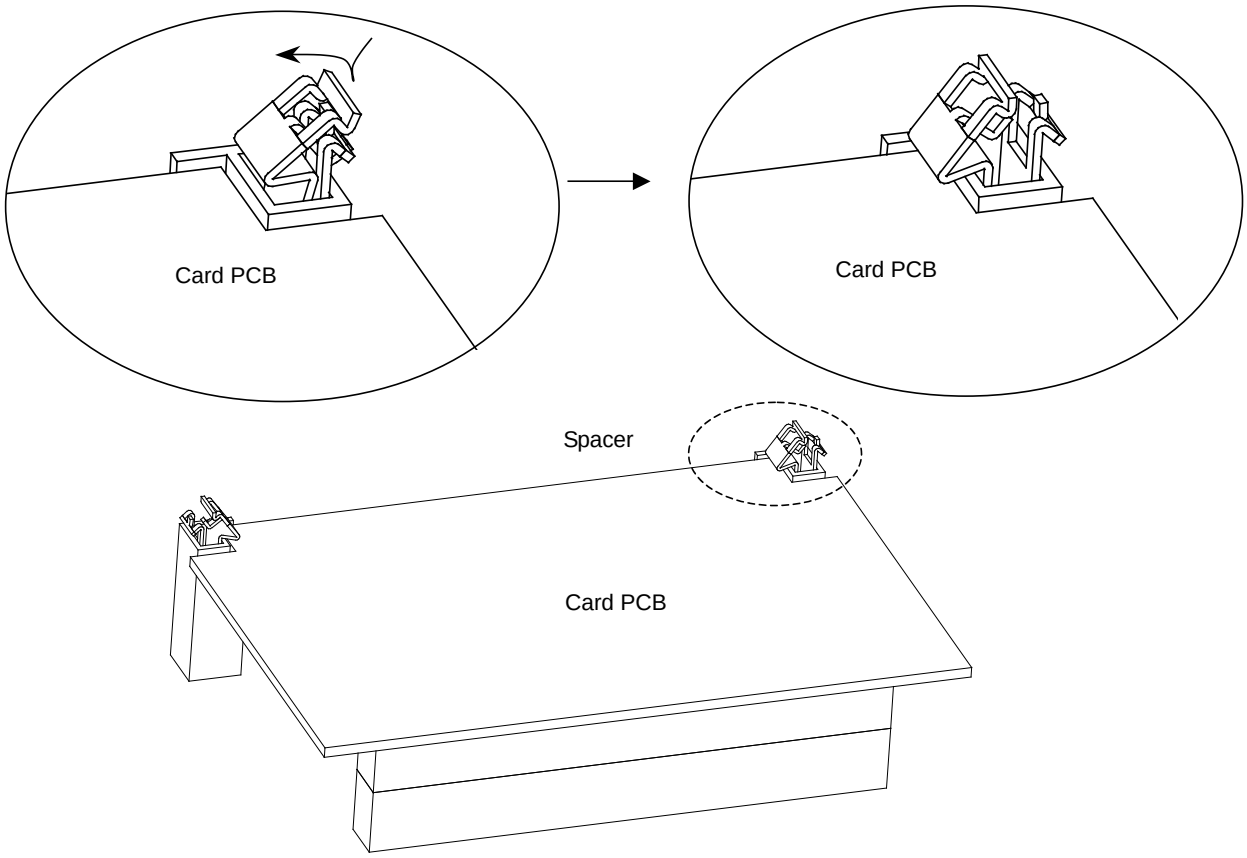

Fig.8.2 (f) Mounting a card on the main board

Demounting a module

> ⚠ **CAUTION**
> When replacing the module, be careful not to touch the module contact. If you touch the module contact inadvertently, wipe any dirt off of the contact with a clean cloth.

(1) Move the clip of the socket outward. (a)
(2) Extract the module by raising it at a 30 degree slant and pulling outward.

Mounting a module

(1) Insert the module at a 30 degree slant into the module socket, with side B facing upward. (b)
(2) Push the module inward and downward until it is locked. (c)

(a)

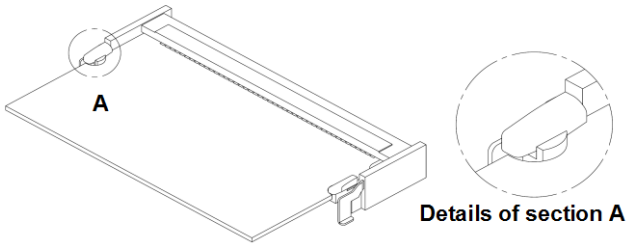

(b)

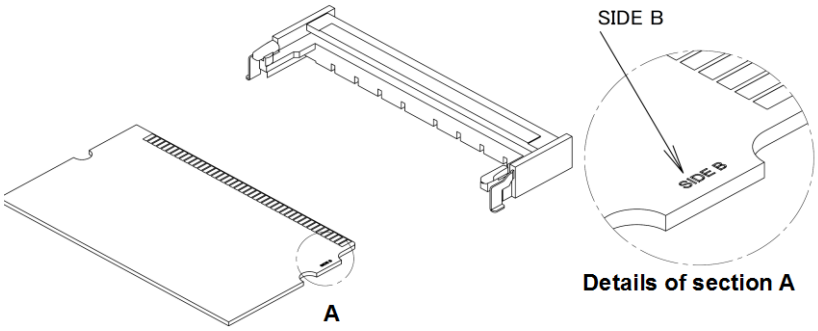

(c)

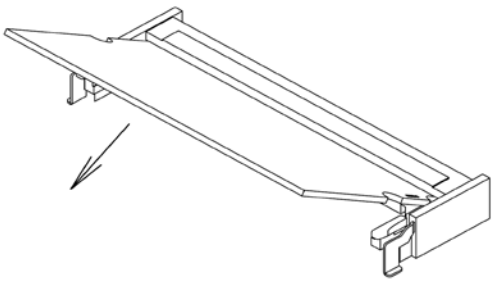

Fig.8.2 (g) Demounting/mounting a module

Figure 8.2 (h) shows the locations of the cards and modules.

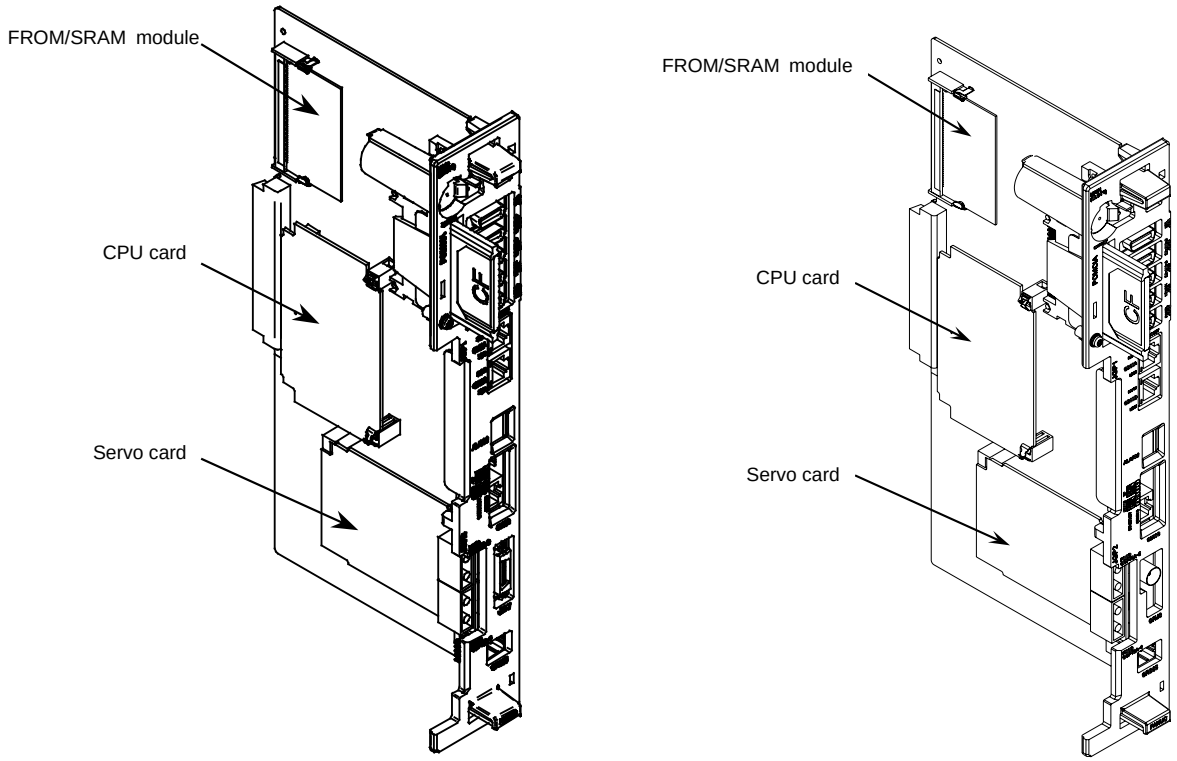

(R-30*i*B main board) **(R-30*i*B Plus main board)**

Fig.8.2 (h) Locations of cards and modules

8.3 REPLACING THE E-STOP UNIT

(1) Detach the cables from the E-stop unit.
(2) Loosen 1-retaining screw and 3-M5 screws holding the E-stop unit, and replace the E-stop unit.(A-cabinet)
Remove 4-M4 screws holding the E-stop unit, and replace the E-stop unit. (B-cabinet)
(3) Reconnect the cables.

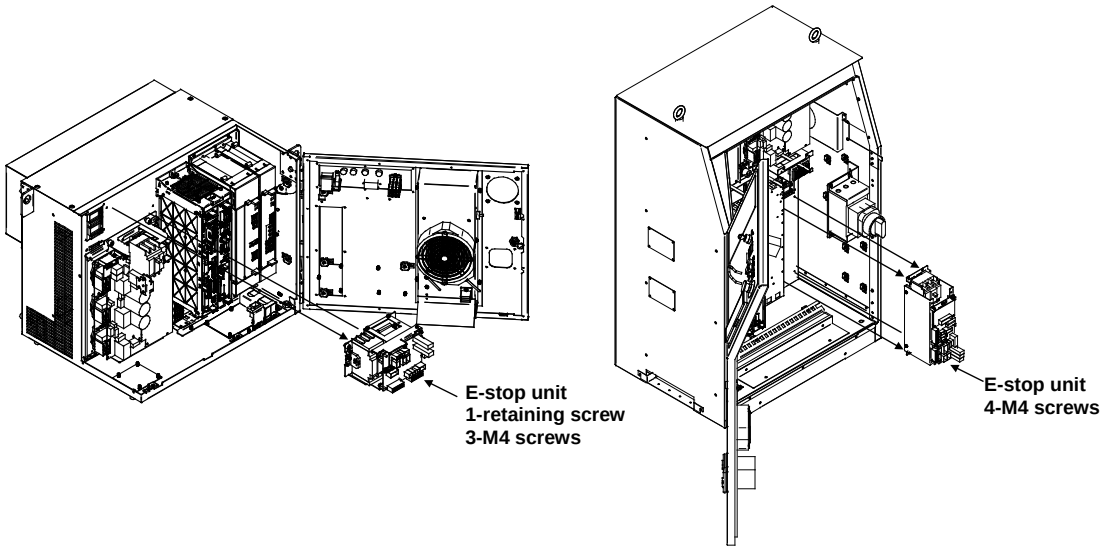

(A-cabinet) **(B-cabinet)**

8.4 REPLACING THE EMERGENCY STOP BOARD

(1) Detach the cables from the emergency stop board unit.
(2) Unlock the nylon latches (5 places for A-cabinet, 6 places for B-cabinet) holding the board, and replace the emergency stop board.
(3) Reconnect the cables.

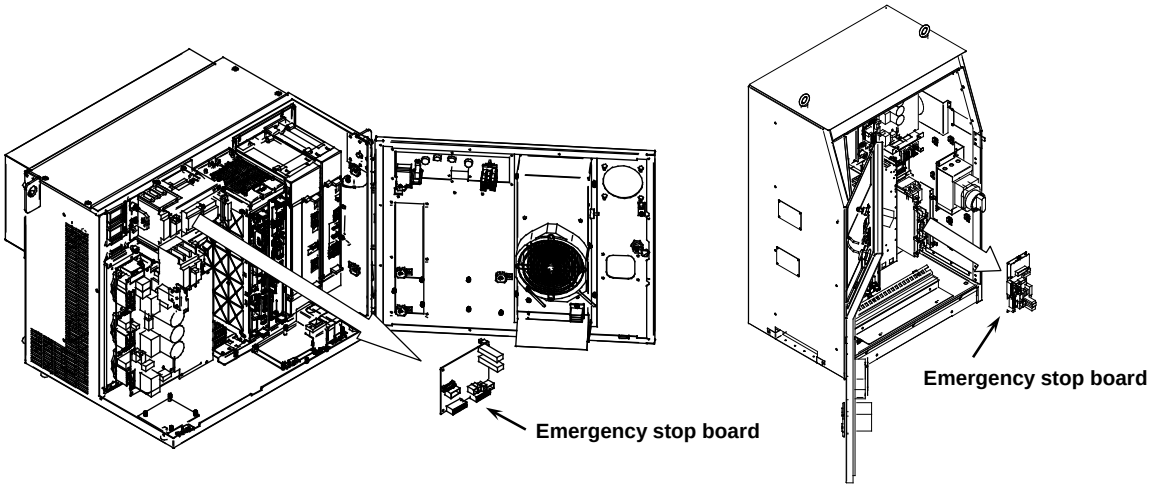

(A-cabinet) (B-cabinet)

8.5 REPLACING THE TRANSFORMER

> ⚠ **WARNING**
> The transformer is heavy. When replacing the transformer, be careful not to cause injury. (The transformer weighs 45 to 60 kg.)

In case of A-cabinet

(1) Disconnect all cables from the transformer input connector panel.

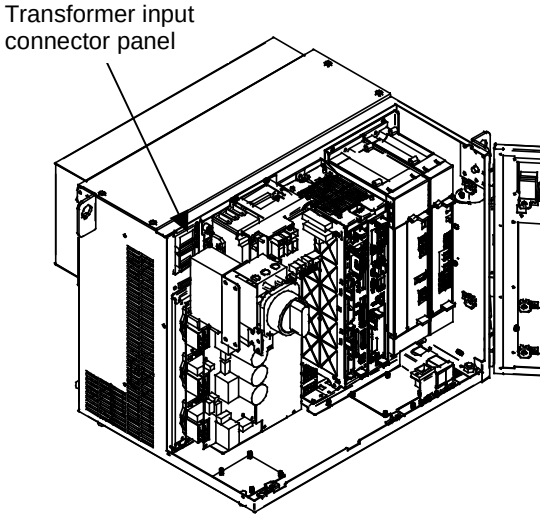

(2) Remove the rear fan unit.

(3) Remove the regenerative resister.
(4) Remove the rear panel.
Remove (6)-M4 screws and (4)-M10 bolts.

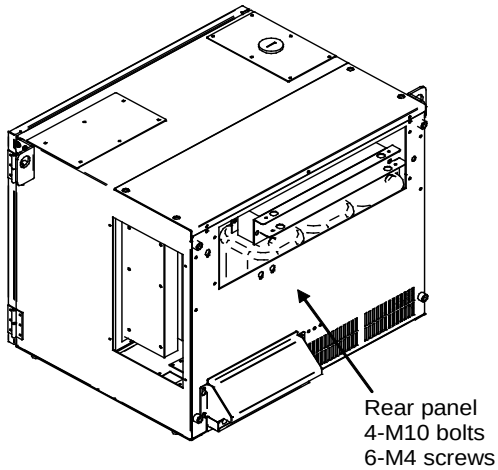

(5) Remove (4)-M4 screws from the transformer input connector panel, and remove the (2)-M6 screws at the foot of the transformer. Then replace the transformer.

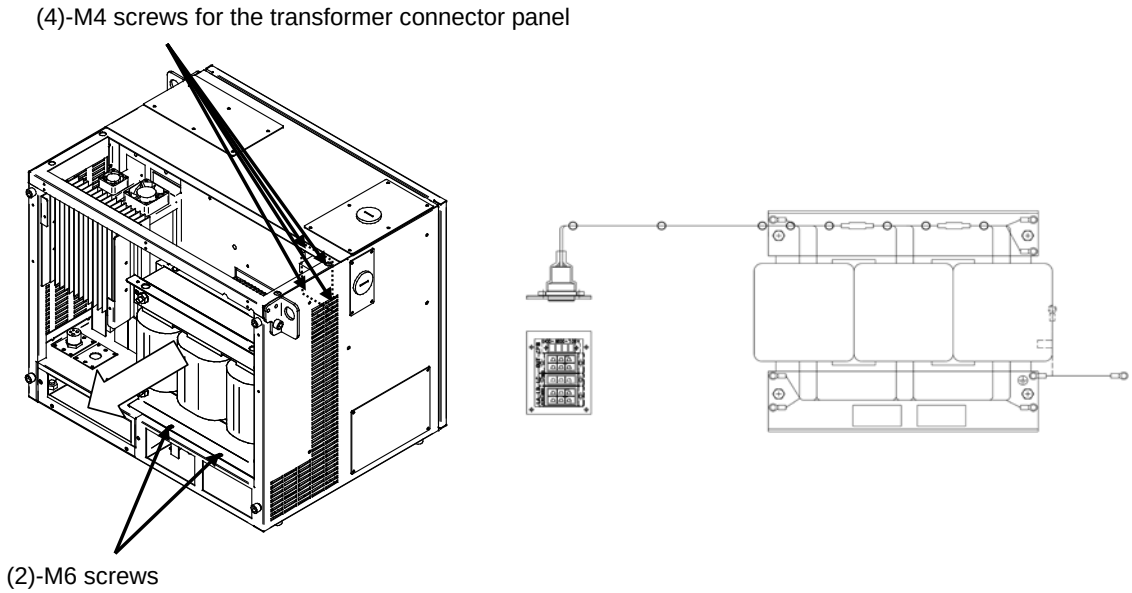

(6) Install a replacement transformer by reversing the above steps.

In case of B-cabinet

(1) Disconnect all cables from the transformer input connector panel.

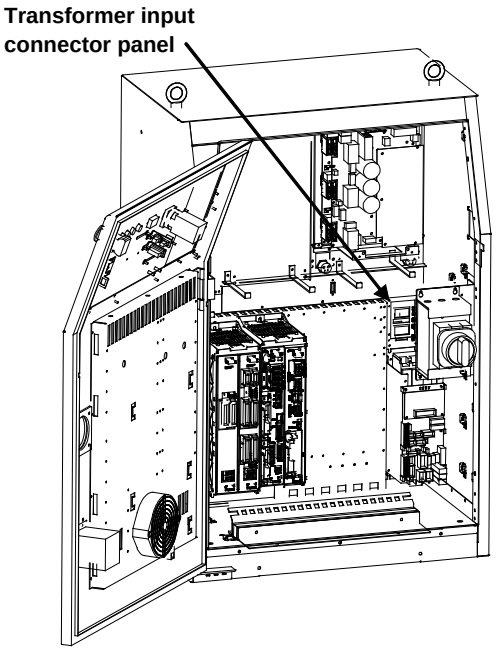

(2) Remove the rear panel.
Remove (8)-M4 screws.

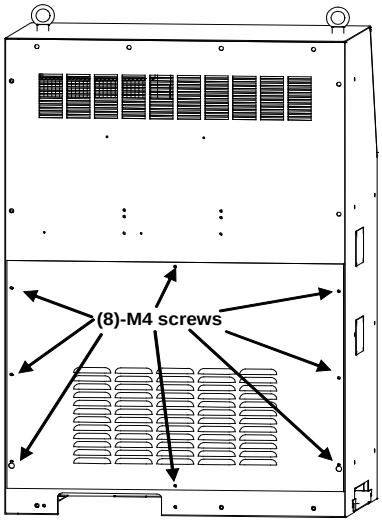

(3) Remove (4)-M4 screws from the transformer input connector panel, and remove the (2)-M6 screws at the foot of the transformer. Then replace the transformer.

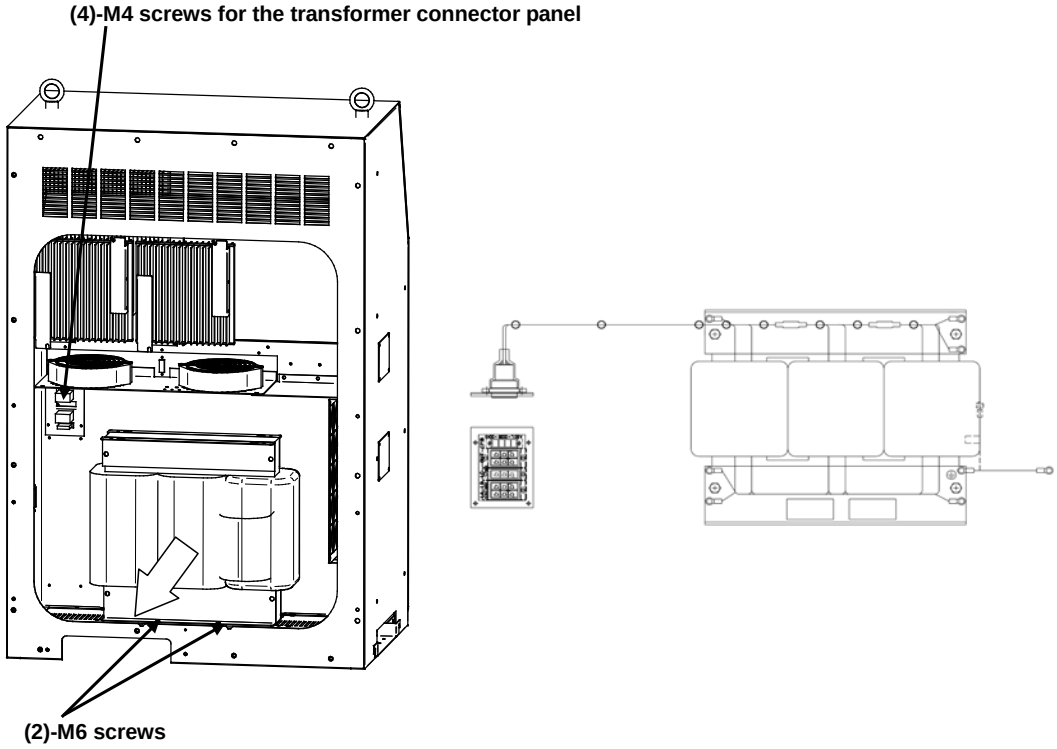

(4) Install a replacement transformer by reversing the above steps.

8.6 REPLACING THE DISCHARGE RESISTOR UNIT

> ⚠ **WARNING**
> Before you start, turn off the controller main power. Be careful not to get burned, because the discharge resistor unit is very hot immediately after operation.

In case of A-cabinet

(1) Unplug CRR63A/B and CRR11A/B connectors from the servo amplifier. In case the cables of these connectors were fastened by cable ties, cut them to free the cables.

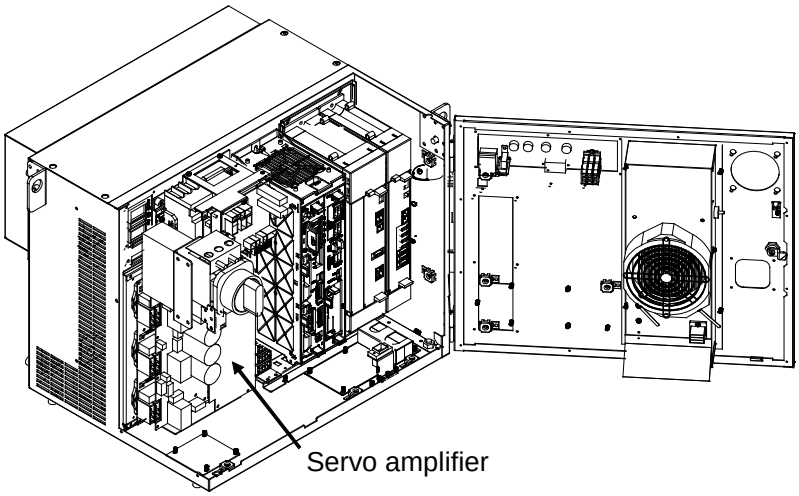

(2) Remove the side panel and the louver from the A-cabinet.

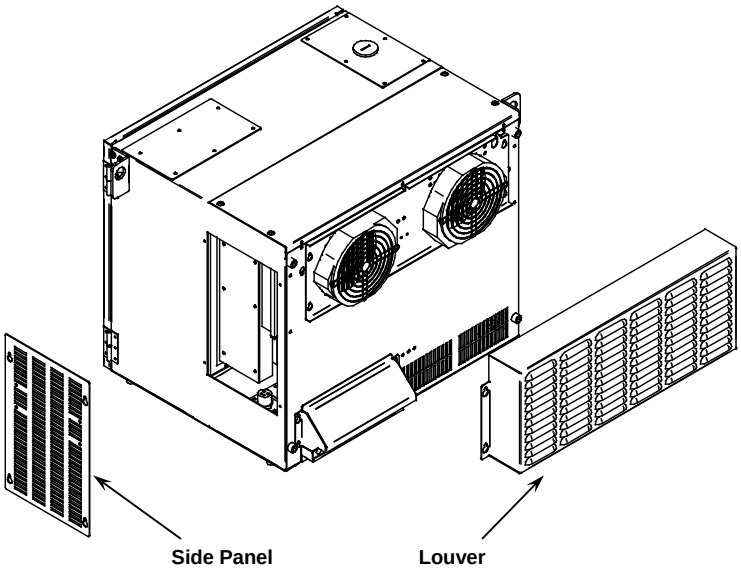

(3) Loosen two screws near the rear fan unit and lift up the discharge resistor unit so that it comes off from the rear panel of the cabinet.

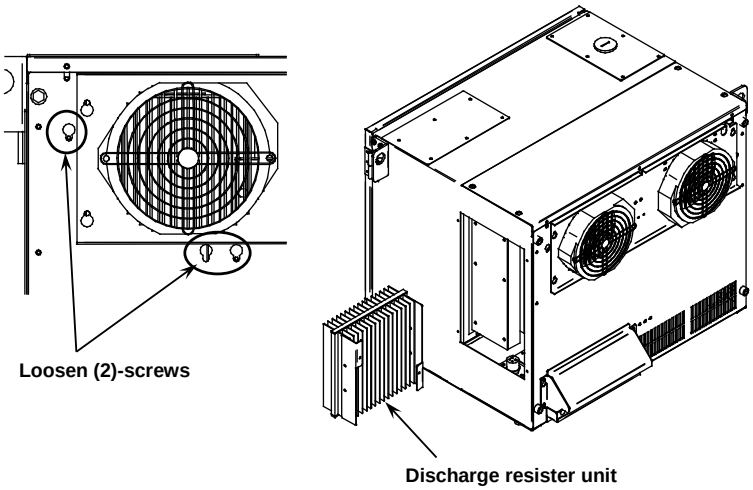

(4) Remove four screws at the cord grip panel and pull out the cable together with the panel. Then the discharge resistor unit is separated from A-cabinet.

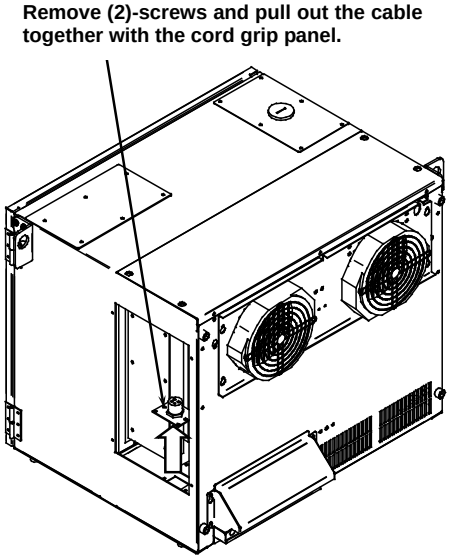

(5) Install a replacement unit by reversing the above procedure.

In case of B-cabinet

(1) Remove the servo amplifier. (See Section 8.7)
(2) Remove the cord grip panel securing the cable of the discharge resistor.
(3) If a cable is fastened with cable ties, cut them with a diagonal cutter to release the cable. Be careful not to damage the cable.
(4) Of the two nuts fastening the discharge resistor, remove the upper nut, loosen the lower nut, and then remove the discharge resistor.

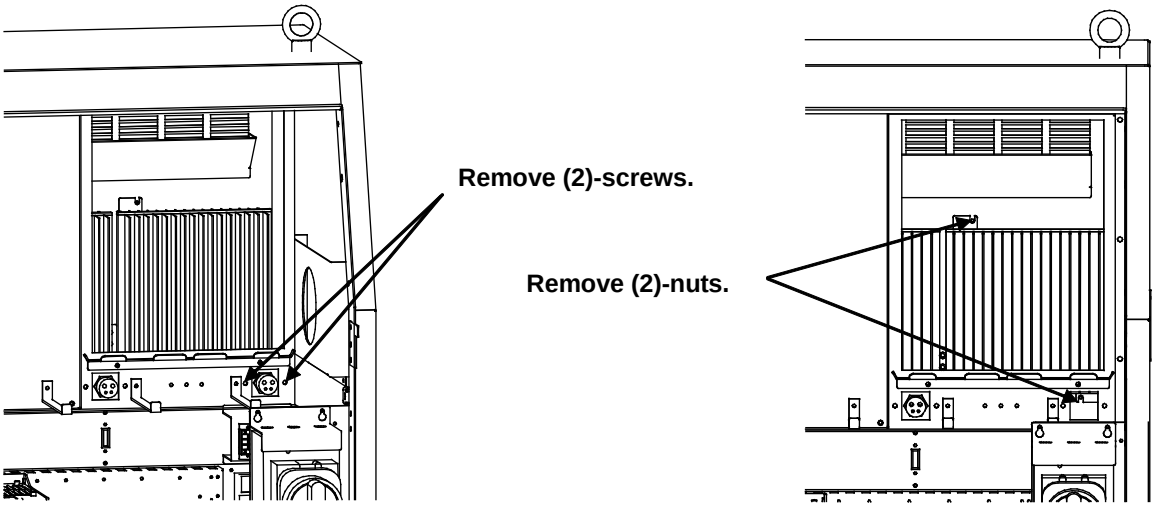

Fig. 8.6(a) Discharge resister

(5) Install a replacement unit by reversing the above procedure.

8.7 REPLACING 6-AXIS SERVO AMPLIFIERS

> ⚠ **WARNING**
> Before touching the servo amplifier, for example, for maintenance purposes, check the DC link voltage at the screw above the LED “V4” with a DC voltage tester to see if the remaining voltage is not higher than 50V.

> ⚠ **CAUTION**
> Because the servo amplifier is heated immediately after operation, leave the servo amplifier until it cools down thoroughly, before replacing it.

In case of A-cabinet

(1) Check the DC link voltage at the screw above the LED "V4" with a DC voltage tester to see if the remaining voltage is not higher than 50V.

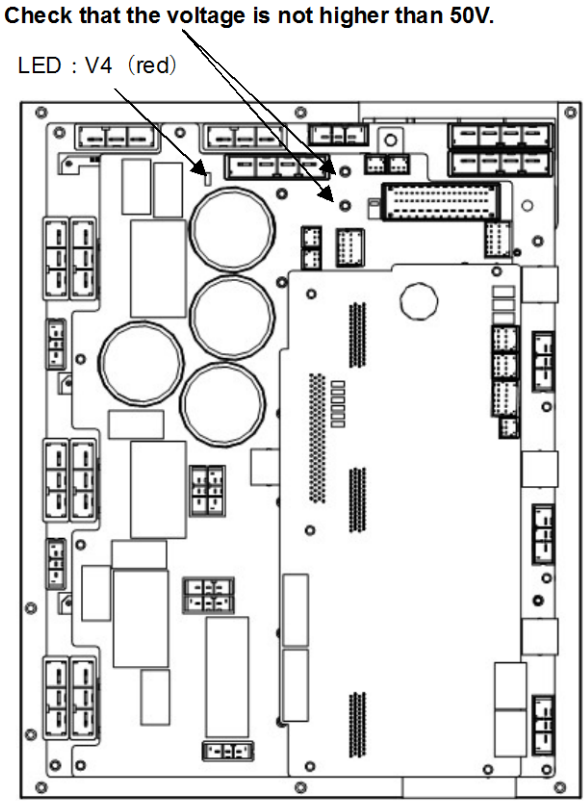

(2) Detach the cables from the 6-axis servo amplifier. Pull out the detached cables away from the amplifier.
(3) Loosen 2-retaining screws at the upper side of the 6-axis servo amplifier.
(4) Hold the handle at the upper side of the amplifier and pull to tilt it.
(5) Lift up the 6-axis amplifier and pull out from the cabinet.
(6) Install a replacement 6-axis amplifier by reversing the above procedure.

(2) Detach the cables from the 6-axis servo amplifier. Pull out the detached cables away from the cabinet.

(3) Loosen (2)-retaining screws.

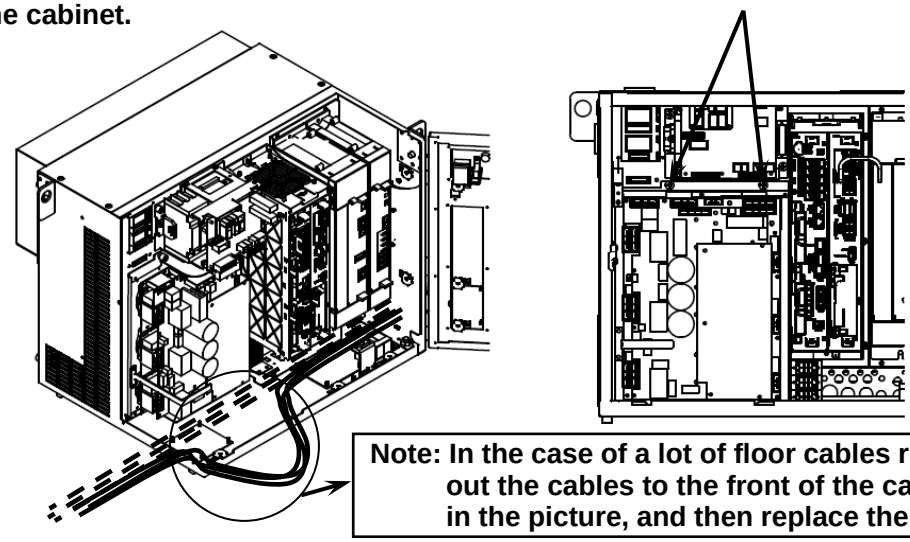

Note: In the case of a lot of floor cables run through, pull out the cables to the front of the cabinet as shown in the picture, and then replace the servo amplifier.

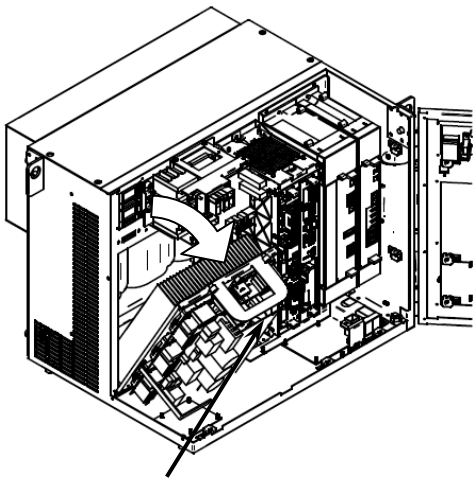

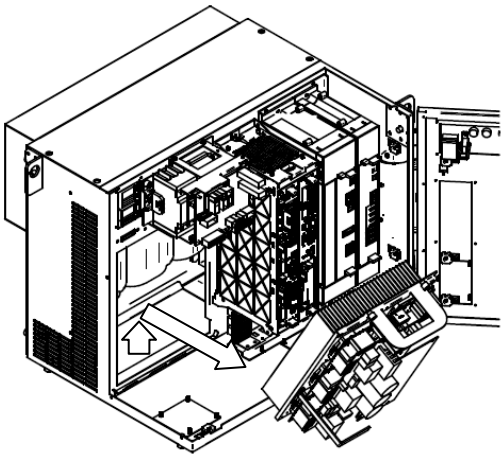

(4) Pull the handle at the upper side.

(5) Lift up and pull out the amplifier.

Fig.8.7(a) Replacing the 6-axis servo amplifier (A-cabinet)

In case of replacing an amplifier is difficult by a procedure shown in figure 8.7(a).

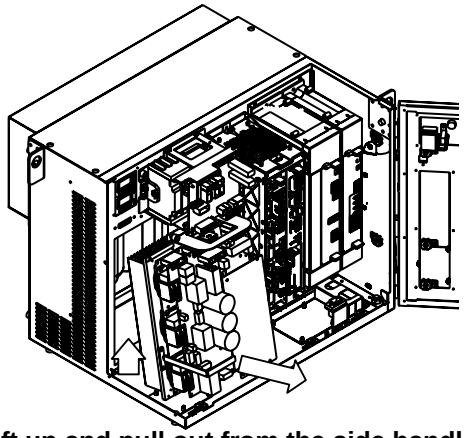

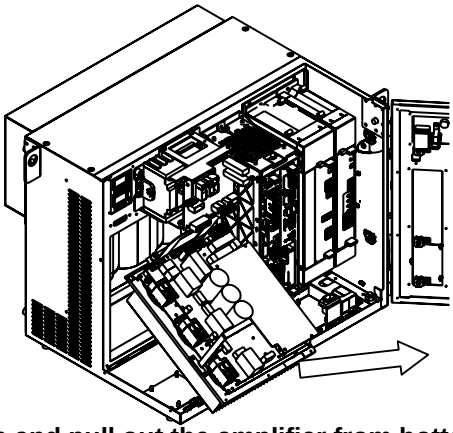

(5) Lift up and pull out from the side handle. Lift up and pull out the amplifier from bottom side.

Fig.8.7(b) Replacing the 6-axis servo amplifier (A-cabinet)

In case of B-cabinet

(1) Remove the amplifier cover and detach the cable.
(2) Check the DC link voltage at the screw above the LED "V4" with a DC voltage tester to see if the remaining voltage is not higher than 50V.

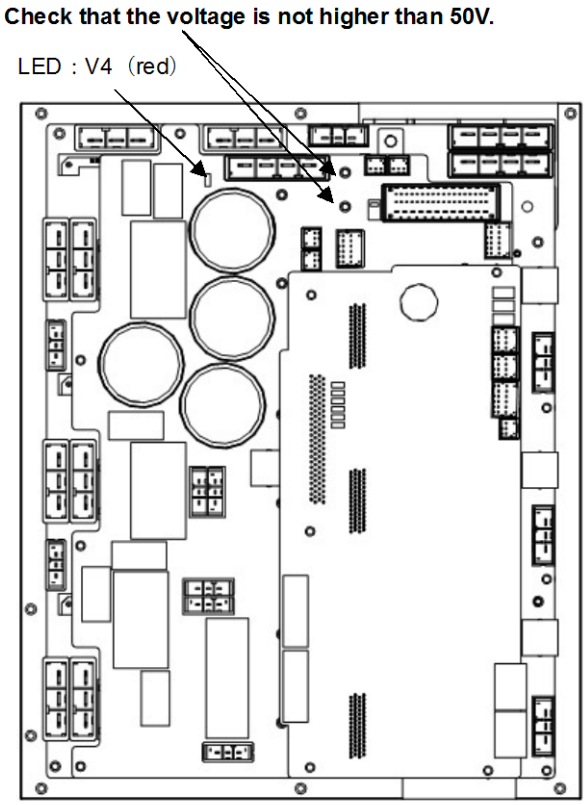

(3) Detach the cables from the 6-axis servo amplifier. Pull out the detached cables away from the amplifier.
(4) Loosen 2-retaining screws at the upper side of the 6-axis servo amplifier.
(5) Hold the handle at the upper side of the amplifier and pull to tilt it.
(6) Lift up the 6-axis amplifier and pull out from the cabinet.
(7) Install a replacement 6-axis amplifier by reversing above procedure.

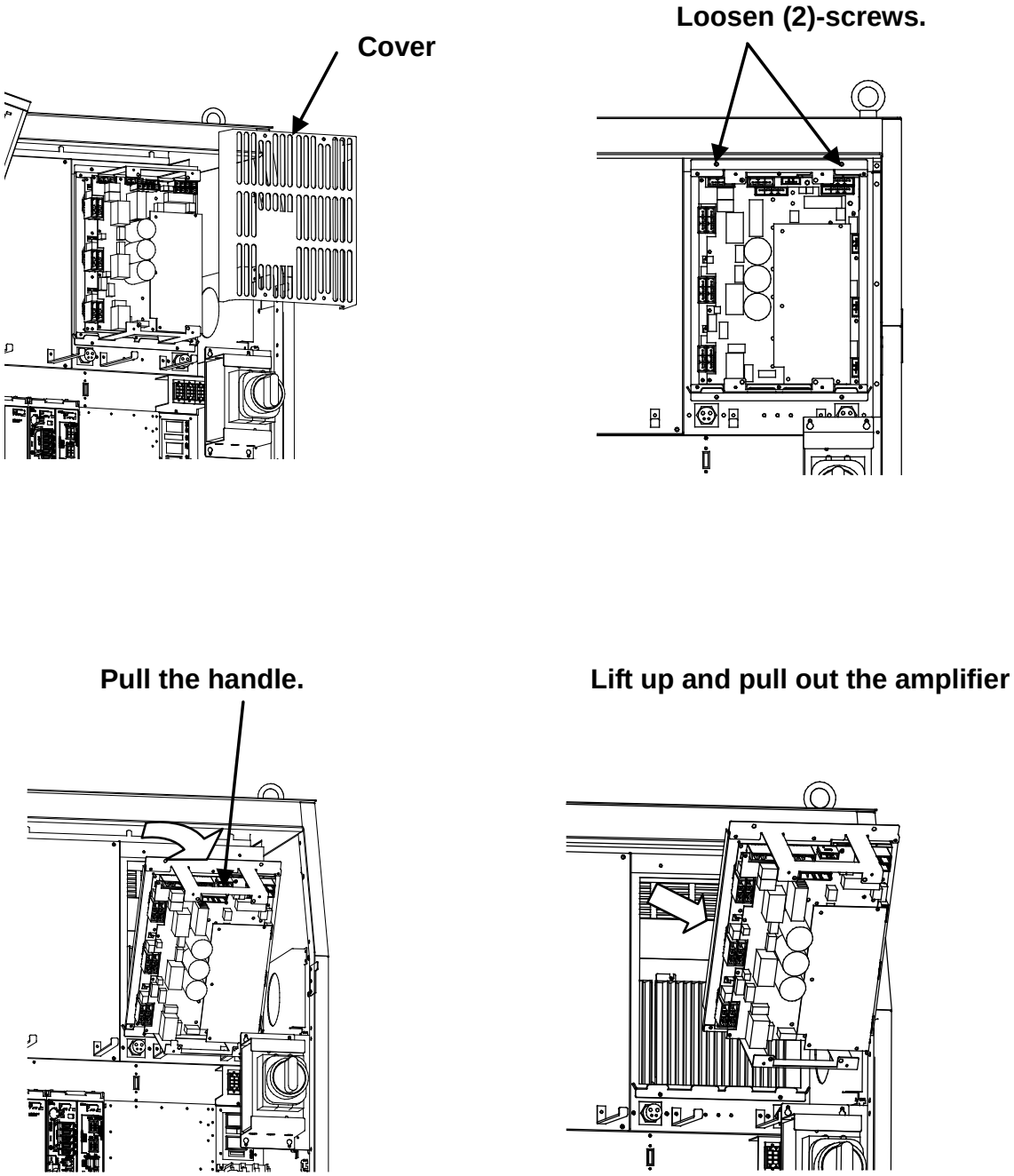

Fig.8.7(c) Replacing the 6-axis servo amplifier (B-cabinet)

8.8 REPLACING I/O UNIT-MODEL A

8.8.1 Replacing the Base Unit of I/O Unit-MODEL A

First, remove the modules from the base unit of I/O Unit-MODEL A. The base unit is retained with 4 screws. Of these screws, loosen the upper 2 screws and remove the lower 2 screws, then replace the base unit.

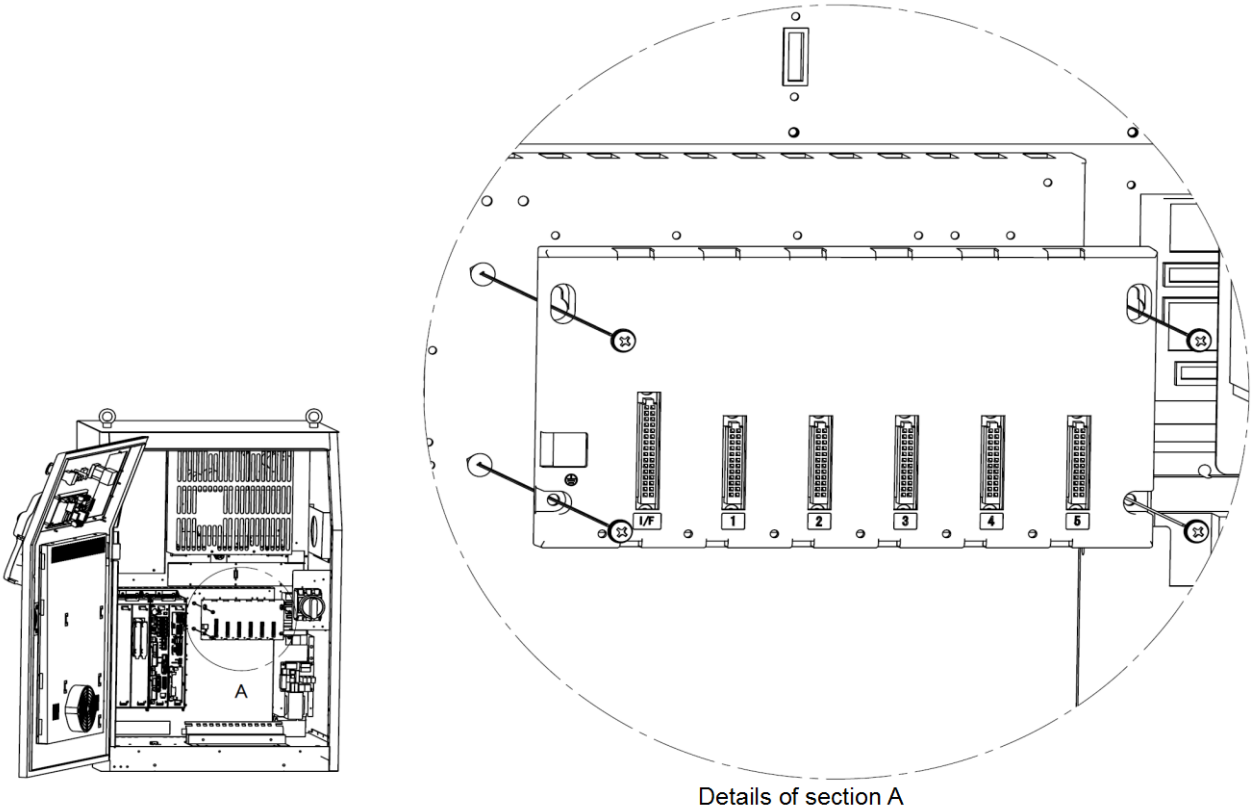

Fig.8.8.1(a) Replacing the base unit of I/O unit model A

8.8.2 Replacing a Module

An interface module and input/output module can be easily installed in and removed from the base unit, as described below.

Installing a module

(1) Put the upper hook of the module into the upper hole of the base unit.
(2) Fit the connectors of the module and the base unit to each other.
(3) Push the module until the lower stopper of the module is caught in the lower hole of the base unit.

Removing a module

(1) Press the lever at the bottom of the module to release the stopper.
(2) Lift the module up.

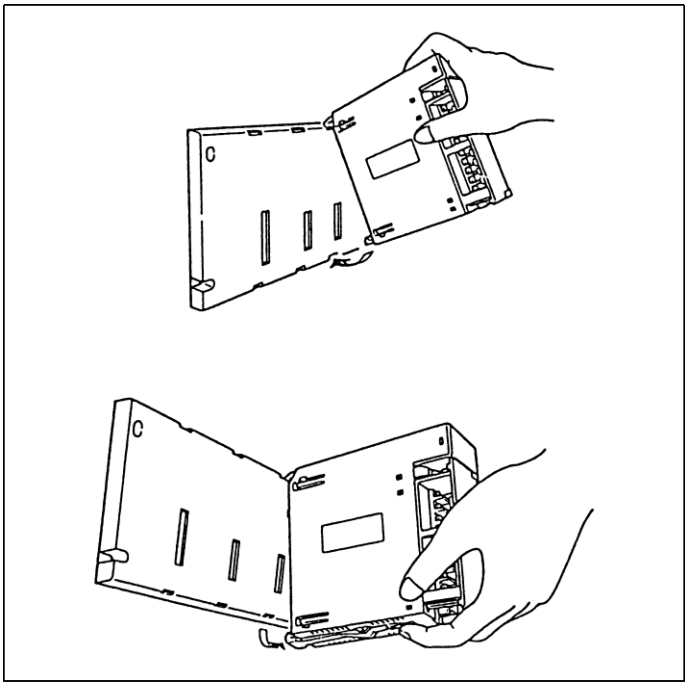

Fig.8.8.2(a) Replacing the module

8.9 REPLACING THE TEACH PENDANT

The specifications of the teach pendant vary with its use. When you replace the teach pendant, check its specifications carefully.

(1) Be sure that the power of the robot controller is off.
(2) Detach the cable from the teach pendant.
(3) Replace the teach pendant.

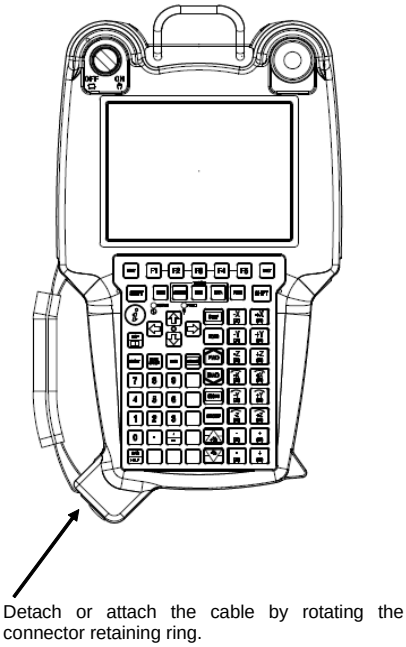

Fig.8.9(a) Replacing the teach pendant

8.10 REPLACING THE CONTROL SECTION FAN MOTOR

The control section fan motor can be replaced without using a tool. The fan motor is mounted on the fan unit rack.

(1) Be sure that the power of a robot controller is off.
(2) Put your finger in the dent in the upper section of the fan unit, and pull the fan unit until it is unlatched.
(3) Lift the fan unit slightly, and dismount it from the rack.
(4) Place a replacement fan on the upper section of the rack, and slide it gently until it is latched.

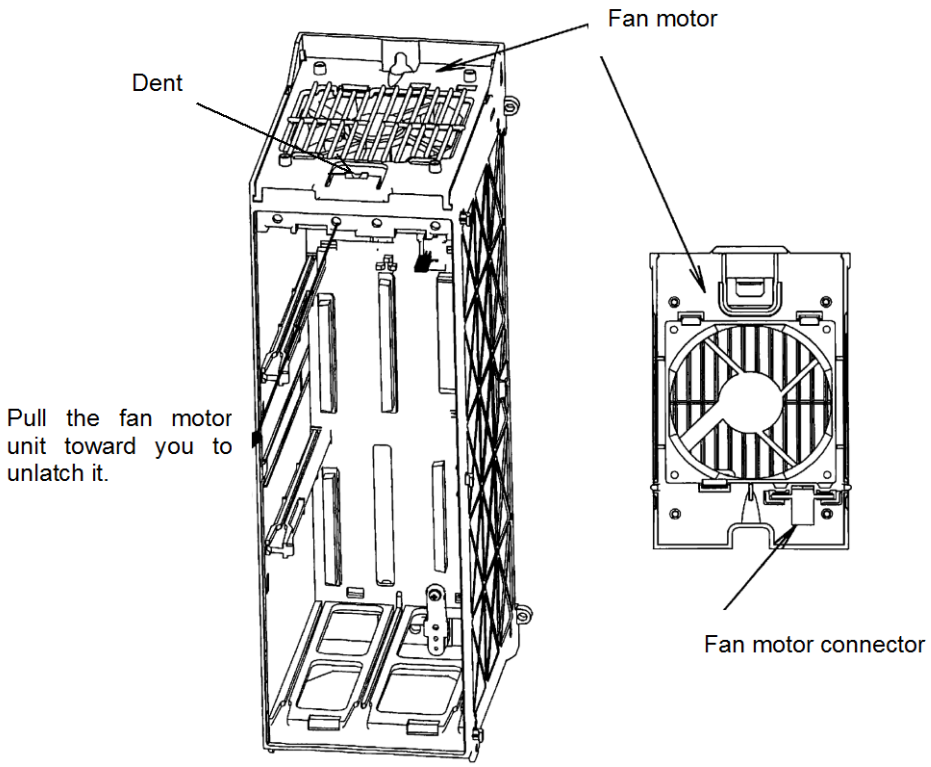

Fig.8.10(a) Replacing the control section fan motor

8.11 REPLACING THE AC FAN MOTOR

> ⚠ **WARNING**
> Do not touch the fan motor when it is rotating, or you could be injured.

8.11.1 Replacing the Heat Exchanger and Door Fan Unit (A-cabinet)

The heat exchanger of the A-cabinet is inside its door. To replace the heat exchanger, it is necessary to remove the door fan unit in advance.

Door fan unit

(1) Remove retaining screws (M4, 4 places).
(2) Disconnect the connector at the FAN.
(3) Mount the replacement fan unit by reversing above procedure. Be careful not to let the cable get caught in the fan.

Heat exchanger

(1) Dismount the door fan unit. (See the above procedure.)
(2) Open the A-cabinet door, and detach cables.
(3) Remove retaining nuts (M5, 4 places), and dismount the unit.
(4) Mount the replacement unit by reversing above procedure.

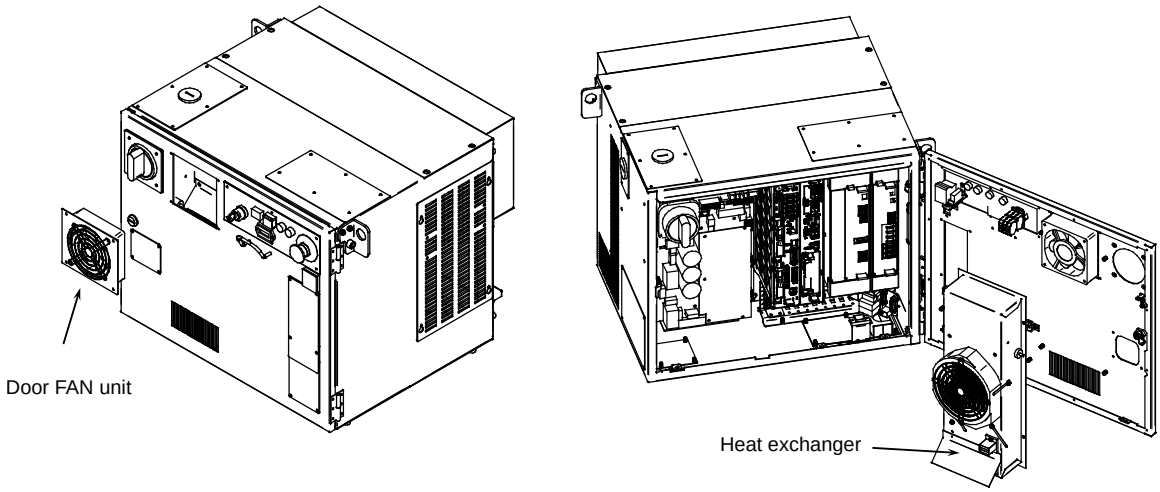

Fig.8.11.1(a) Replacing the heat exchanger and door fan unit (A-cabinet)

8.11.2 Replacing Rear Fan Unit (A-cabinet)

(1) Loosen the 4-screws(M4) of the louver, then remove it.
(2) Loosen 4-screws(M4) , and then detach the fan unit.
(3) Unplug the connector at the cabinet.
(4) Mount the replacement unit by reversing above procedure.

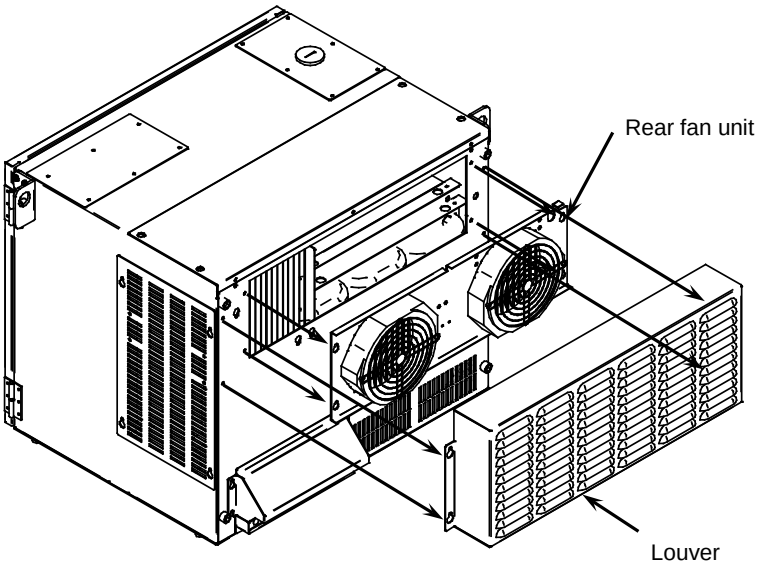

Pinch and pull the connector hood to unplug the connector.

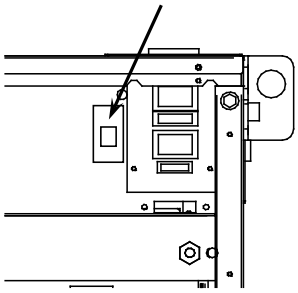

Fig.8.11.2(a) Replacing rear fan unit (A-cabinet)

8.11.3 Replacing External Fan Unit and Door Fan (B-cabinet)

Door fan

(1) Detach the cable from the fan unit.
(2) Remove the retaining screws from the fan unit, then dismount it.
(3) Install a new fan unit by reversing the dismounting procedure.

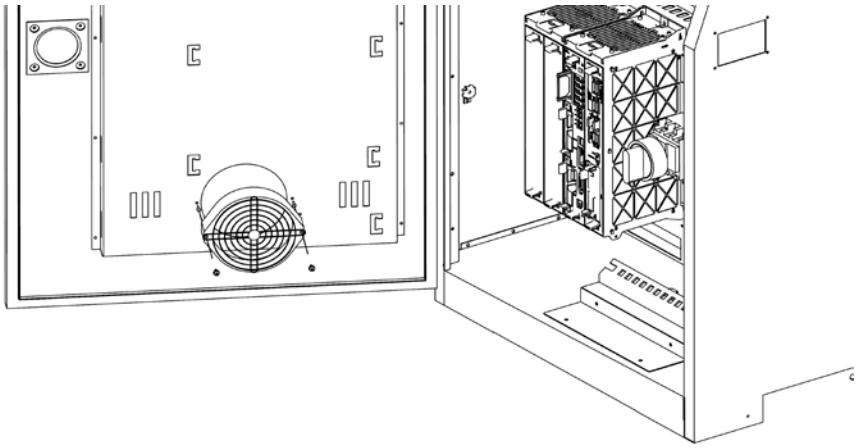

(Replacing the Door Fan Unit)

External fan unit

(1) Detach the cable connecting the fan unit.
(2) Remove the screws and pull out the fan unit toward you.
(3) Install a new fan unit by reversing the dismounting procedure.

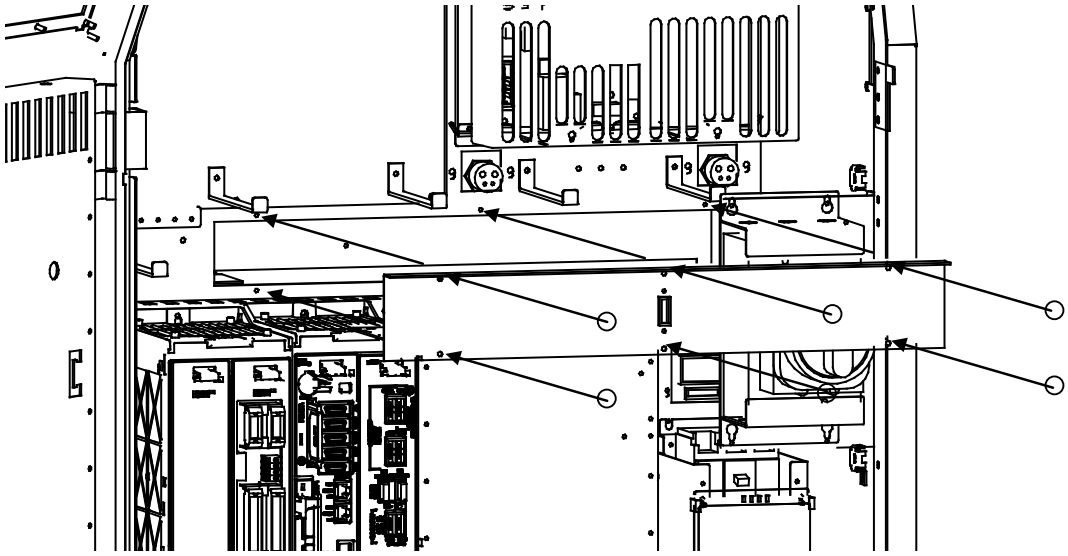

(Replacing the External Fan Unit)

8.12 REPLACING THE BATTERY

8.12.1 Battery for Memory Backup (3 VDC)

The programs and system variables are stored in the SRAM located on the main board. The power to the SRAM memory is backed up by a lithium battery mounted on the front panel of the main board. The above data is not lost even when the main power of the controller is turned off. A new battery can maintain the contents of memory for about 4 years (Note).
When the voltage of the battery becomes low, the low-voltage battery alarm (system-035) is displayed on the teach pendant. When this alarm is displayed, replace the battery as soon as possible. In general, the battery can be replaced within one or two weeks, however, this depends on the system configuration.
If the battery voltage gets lower, it becomes impossible to back up the content of the SRAM. Cycling power to the controller in this state causes the system not to start, and the LED located on the main board displays "1" because the contents of memory have been lost. Clear the entire SRAM memory and reenter data after replacing the battery. Important data should be saved to a memory card or other external device beforehand for just such an emergency.

NOTE
In a newly introduced robot, the battery is factory-installed. Since some time passes between when the robot is built and when it is installed, battery replacement may, therefore, be needed within 4 years after the introduction of the robot.

Replacing the lithium battery

(1) Prepare a new lithium battery (ordering drawing number: A02B-0200-K102, A98L-0031-0012).
(2) Turn the robot controller on for about 30 seconds.

⚠ CAUTION
Complete the steps (3) to (5) within 30 minutes.
If the battery is left disconnected for a long time, the contents of memory will be lost.
To prevent possible data loss, it is recommended that the robot data such as programs and system variables be backed up before battery replacement.

(3) Turn the robot controller off.
(4) Remove the old battery from the top of the main board.
First unlatch the battery, remove it from the battery holder, and detach its connector.

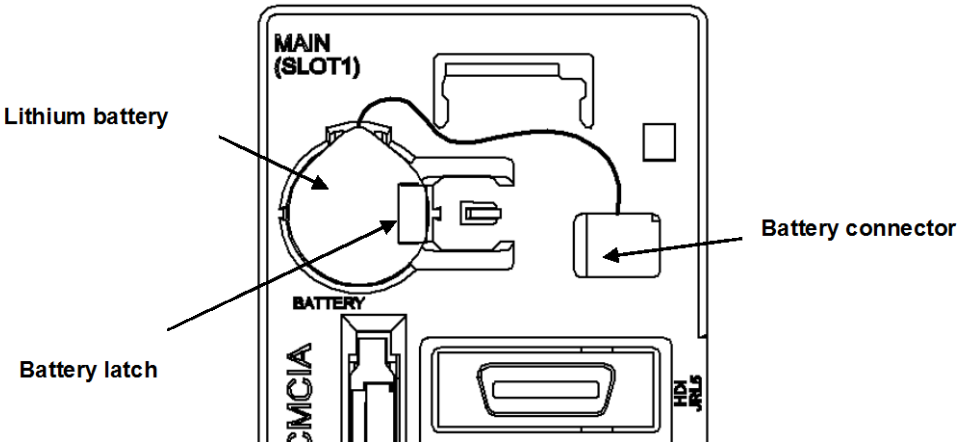

Fig.8.12.1(a) Replacing the lithium battery

(5) Remove the old battery, insert a new one into the battery holder, and attach the connector. Confirm that the battery is latched firmly.

> ⚠ **WARNING**
> Using other than the recommended battery may result in a battery explosion. Replace the battery only with the specified battery (A02B-0200-K102, A98L-0031-0012).

Dispose of the replaced battery as an industrial waste, according to the laws and other rules in the country where the controller is installed and those established by the municipality and other organizations that have jurisdiction over the area where the controller is installed.

II. CONNECTIONS

1 OVERVIEW

This section describes the electrical interface connections in the R-30*i*B/R-30*i*B Plus. It also includes information about installation of the R-30*i*B/R-30*i*B Plus.

2 BLOCK DIAGRAM

Fig.2(a) is a block diagram of electrical interface connections with the R-30*i*B/R-30*i*B Plus.

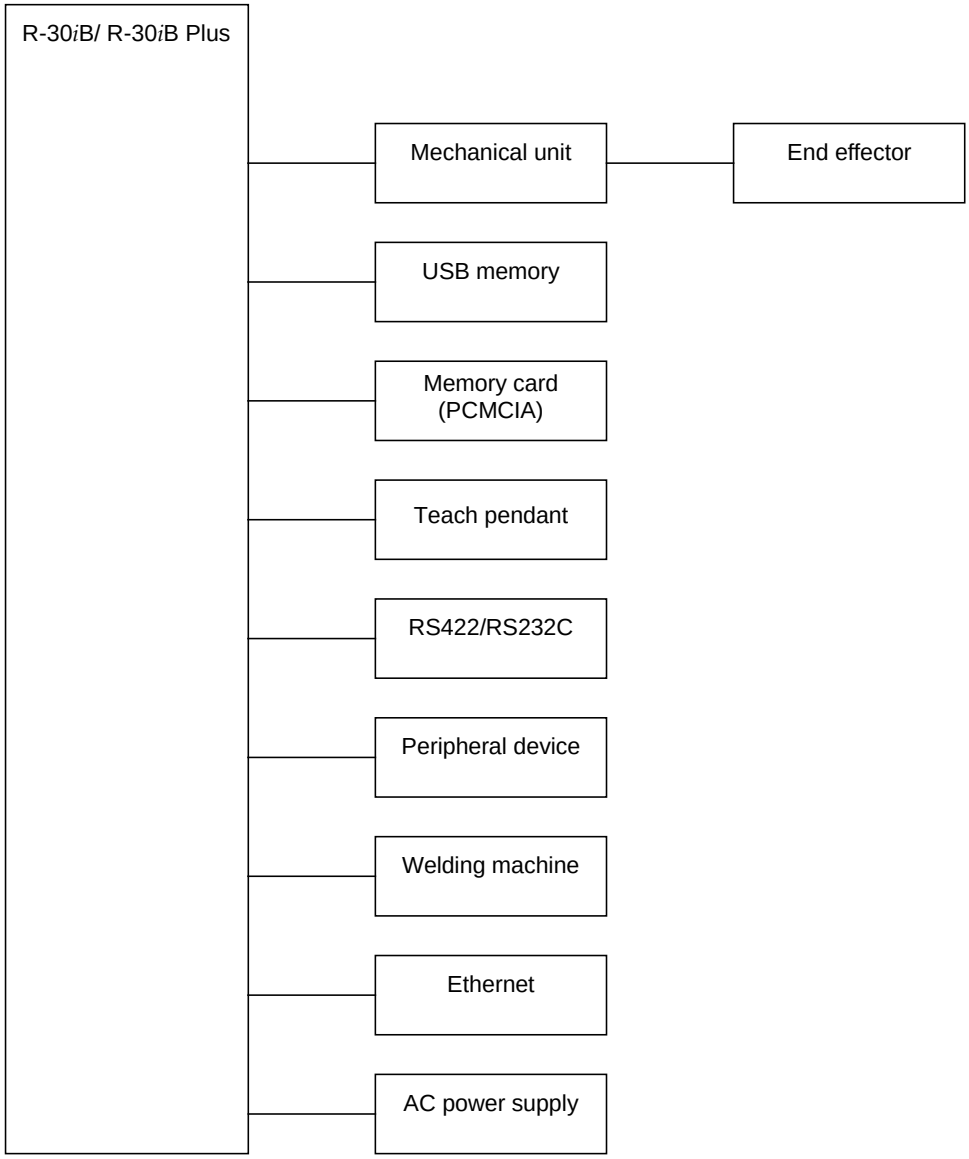

Fig.2(a) Block diagram of electrical interface connection

3 ELECTRICAL CONNECTIONS

3.1 CONNECTIONS BETWEEN THE CONTROLLER AND THE MECHANICAL UNIT AND OTHER GENERAL CONTROLLER CONNECTIONS

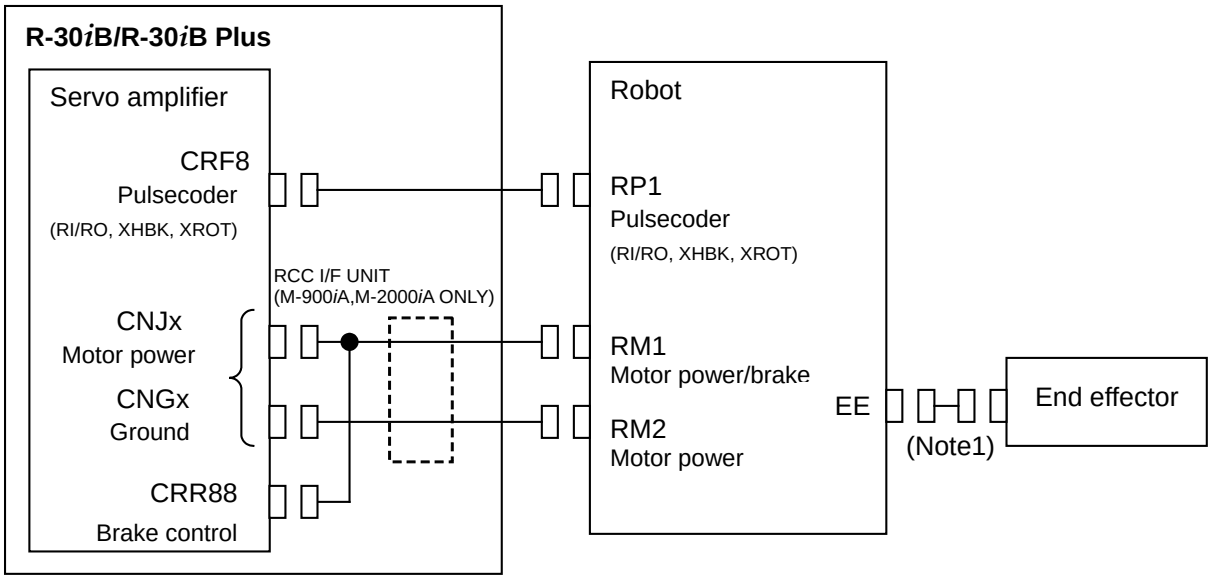

Fig.3.1 (a) Mechanical connection diagram

NOTE
This cable is not included. It must be supplied by the customer.

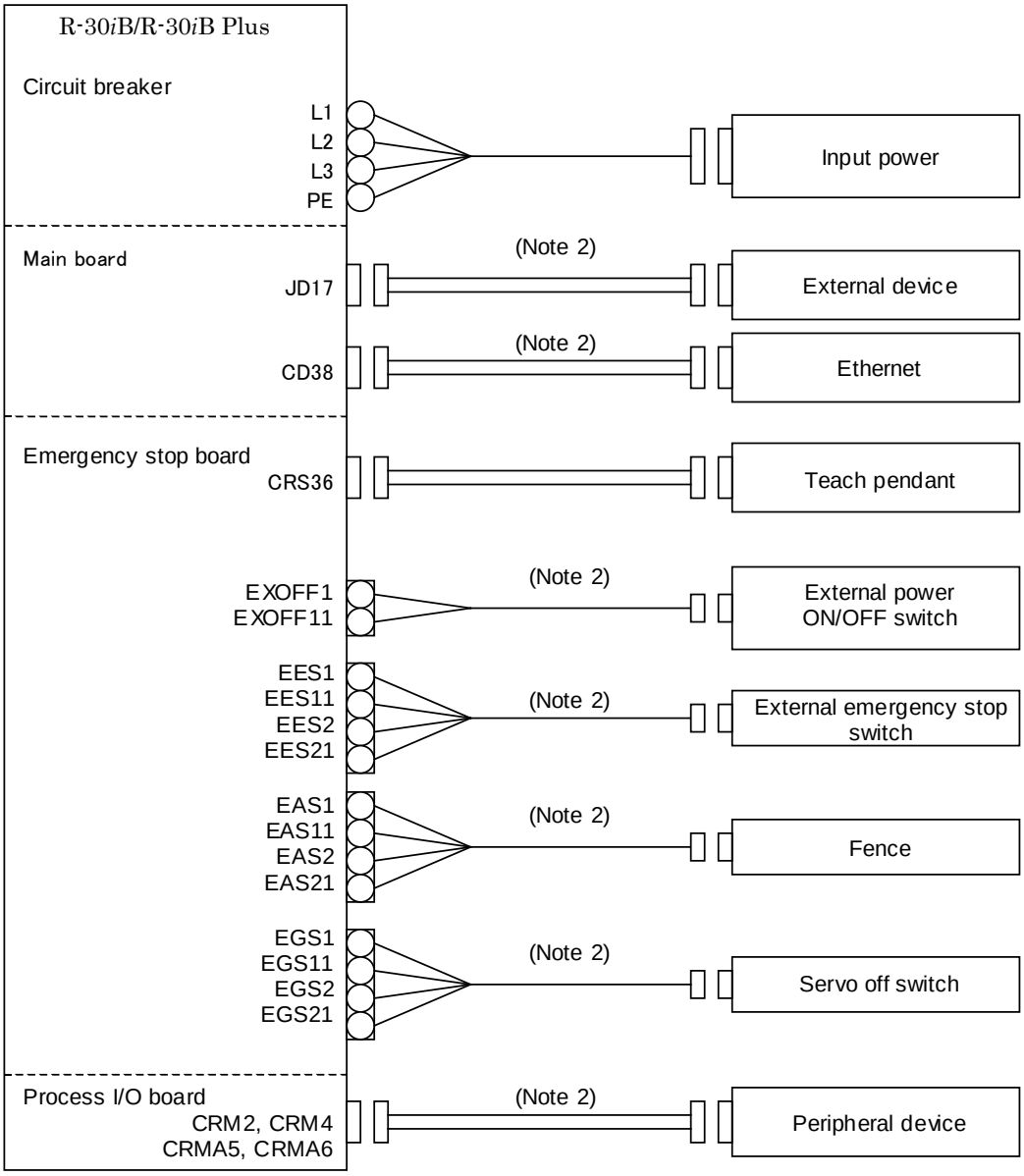

NOTE

1 For detail of the peripheral device connection, see the section of Peripheral device interface.

2 This cable is not included. It must be supplied by the customer.

Fig.3.1 (b) Unit-to-unit connection diagram

3.2 CONNECTION TO FANUC I/O LINK AND FANUC I/O LINK *i*

3.2.1 Connection of I/O Link by Using JD1A Connector

The connection of I/O link and I/O Link *i* by using JD1A connector is shown below.

1. When the R-30*i*B /R-30*i*B Plus controller is used as the I/O link master (default)
   (When the R-30*i*B /R-30*i*B Plus controller controls the process I/O board etc.)

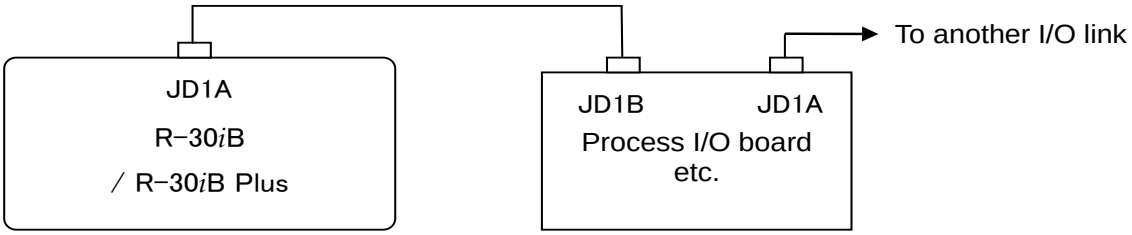

2. When the R-30*i*B /R-30*i*B Plus controller is connected to a CNC etc.
   via the I/O link connection unit

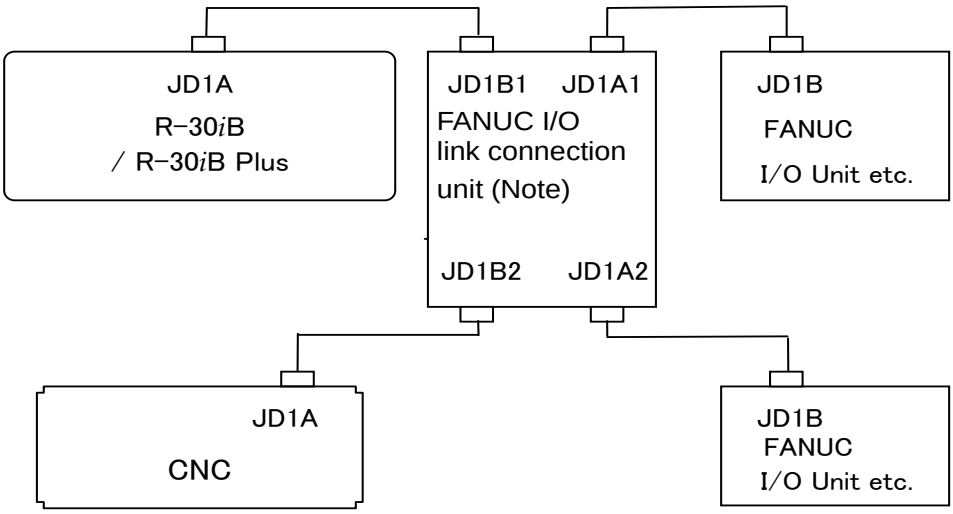

3. When the R-30*i*B /R-30*i*B Plus controller is used as an I/O link and I/O link *i* slave
   (When a CNC is the I/O link and I/O link *i* master)

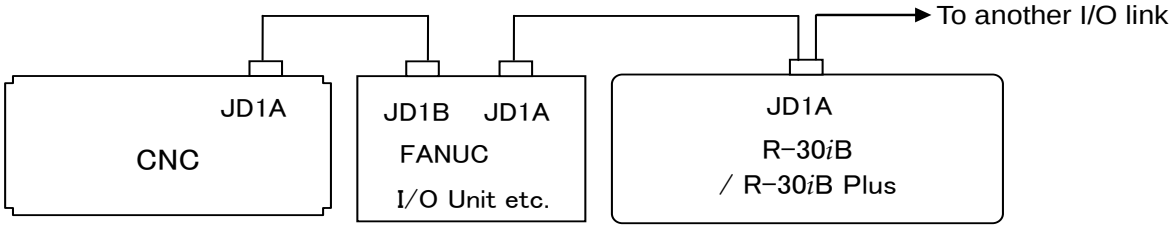

Fig.3.2.1(a) Connection of I/O link and I/O Link *i* by using JD1A connector

NOTE
DC 24V distribution cable (Refer to APPENDIX A) is necessary for A cabinet.

3.2.1.1 Connection of the I/O Link cable by using JD1A connector

1. Connect the cable according to the system. Be sure to perform shielding.
2. Before connection, turn off the power.

NOTE

For connection with the CNC with I/O links, turn on or off the power of the CNC and the robot controller at the following timing.

a) Slave units and the master must be powered on or off at the same time.
b) If the CNC or robot controller is powered off after startup of the system, an I/O link error occurs. To successfully make connection with I/O links again, power off all of the units and then power them on at the timing indicated in a) above.

JD1A interface

V1	RXSLCA	11	0V
2	*RXSLCA	12	0V
3	TXSLCA	13	0V
4	*TXSLCA	14	0V
5		15	0V
6		16	0V
7		17	
8		18	+5V
9	+5V	19	+24E
10	+24E	20	+5V

3. When the R-30iB/R-30iB Plus controller is used as the I/O link master, use a twisted-pair cable in which wires RXSLCA(Pin No.1 of JD1A) and *RXSLCA(Pin No.2 of JD1A) are paired and wires TXSLCA(Pin No.3 of JD1A) and *TXSLCA(Pin No.4 of JD1A) are paired.
4. Shield the cable collectively and ground the shield on the CNC side.

3.2.1.2 Cable connection diagram of the I/O Link cable when using JD1A connector

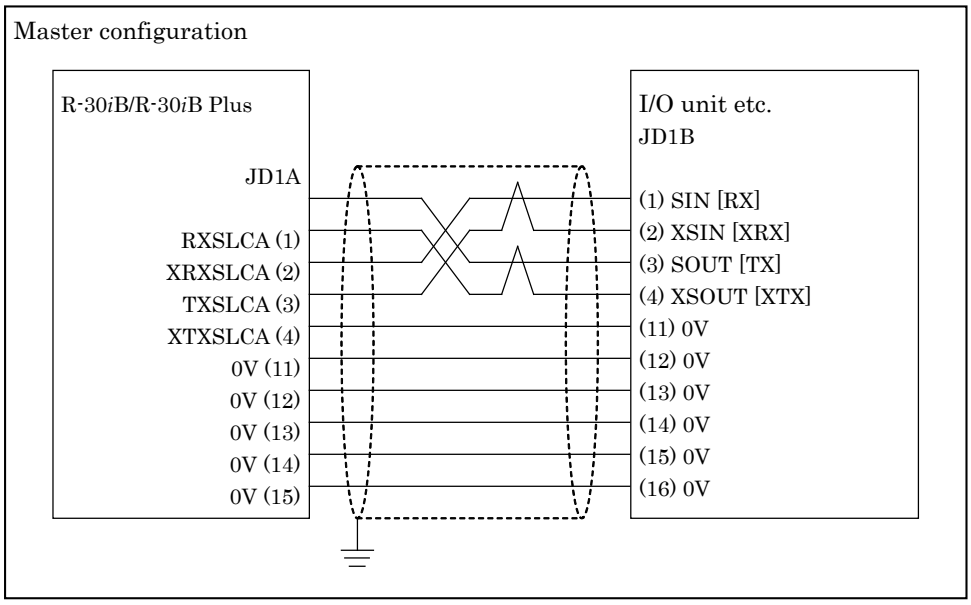

Fig.3.2.1.2(a) Cable connection diagram of the I/O Link cable when using JD1A connector

3.2.2 Connection of I/O Link and I/O Link *i* when Using JRL8 Connector

The connection of I/O link and I/O link ***i*** when using JRL8 connector is shown below.

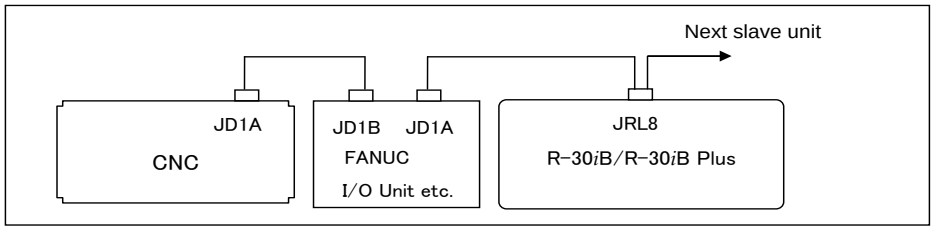

Fig.3.2.2(a) Connection of I/O link and I/O Link *i* by using JRL8 connector

3.2.2.1 Connection of the I/O Link cable when using JRL8 connector

1 Connect the cable according to the system. Be sure to perform shielding.
Shield the cable collectively and ground the shield on the CNC side.

2. Before connection turn off the power.

> **NOTE**
> For connection with the CNC with I/O Link and I/O link ***i***, turn on or off the power of the CNC and the robot controller at the following timing.
> a) Slave units and the master must be powered on or off at the same time.
> b) If the CNC or robot controller is powered off after startup of the system, I/O Link and I/O link ***i*** error occurs. To successfully make connection with I/O Link and I/O link ***i*** again, power off all of the units and then power them on at the timing indicated in a).

JRL8

1	RXSLCB	11	*HDI1
2	0V	12	0V
3	*RXSLCB	13	*HDI2
4	0V	14	0V
5	TXSLCB	15	*HDI3
6	RXSLCC	16	0V
7	*TXSLCB	17	*HDI4
8	*RXSLCC	18	0V
9	TXSLCC	19	*HDI5
10	*TXSLCC	20	0V

JRL8 Interface

3. When the R-30*i*B/R-30*i*B Plus controller is connected to CNC or preceding I/O link ***i*** slave unit, use a twisted-pair cable in which wires RXSLCB (Pin No.1 of JRL8) and *RXSLCB (Pin No.3 of JRL8) are paired and wires TXSLCB (Pin No.5 of JRL8) and *TXSLCB (Pin No.7 of JRL8) are paired.

4. When the R-30*i*B/R-30*i*B Plus controller is connected to next I/O link *i* slave unit, use a twisted-pair cable in which wires RXSLCC (Pin No.6 of JRL8) and *RXSLCC (Pin No.8 of JRL8) are paired and wires TXSLCC (Pin No.9 of JRL8) and *TXSLCC (Pin No.10 of JRL8) are paired.

3.2.2.2 Cable connection diagram of the I/O Link cable by using JRL8 connector

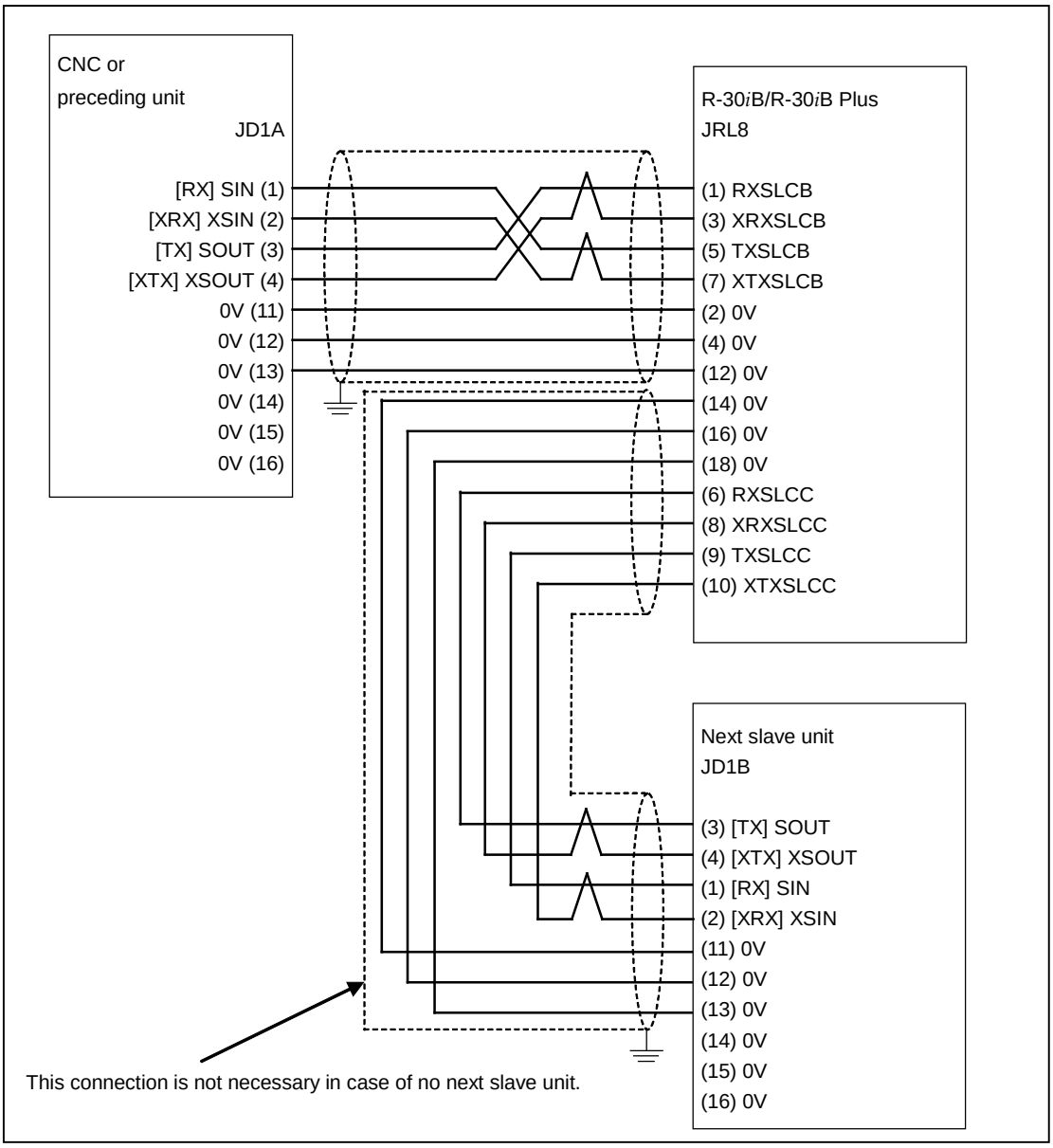

Fig.3.2.2.2(a) Cable connection diagram of the I/O Link cable by using JRL8 connector

3.3 EXTERNAL CABLE WIRING DIAGRAM

3.3.1 Robot Connection Cables

> ⚠ **CAUTION**
> Before operating the robot, uncoil the interconnection cables from their shipping position to prevent excessive heat, which may damage the cable shield (sheath) depending on the behavior of the robot.
> (Coiled part should be shorter than 10 meter.)

There are two types of the robot connection cable;

Non-flex type: usage is restricted to fixed laying

Flex type: possible to use in the cable carrier

Specification of cable

		Robot	Non-flex type			Flex type		
			Diameter (mm)	Weight (kg/m)	Minimum bending radius (mm)	Diameter (mm)	Weight (kg/m)	Minimum bending radius (mm)
RP1		All models	16.0	0.45	96	20.5	0.71	200
RM1		Group 1 Group 3 Group 4 Group 5 Group 11 Group 12	26.1	1.22	156	25.4	1.2	200
		Group 2 Group 6	20.0	0.7	120	18.4	0.7	200
RM2		Group 3 Group 4 Group 5	26.1	1.22	156	25.4	1.2	200
RMP	RP	Group 7 Group 8	16.0	0.45	96	20.5	0.71	200
	RM		20.0	0.7	120	18.4	0.7	200
RP7A		Group 12	8.5	0.09	51	42.5	0.12	200
RM7A			20.6	0.71	126	103.0	0.64	200
EARTH		All models	4.7	0.065	30	23.5	0.065	200
R-30*i*B Camera cable		All models	-	-	-	8.0	0.12	200 (Flex) 60 (Non-flex)
R-30*i*B Plus Camera cable		All models	8.0	0.1	48	9.6	0.13	200 (Flex) 60 (Non-flex)

Group1	R-1000*i*A(Except /120F-7B/130F), R-2000*i*B (Except /200T/220U/220US), R-2000*i*C(Except /190U/210L/210WE/220U/270F/270R), R-2000 *i*D/100FH/165FH/210FH, M-420*i*A, M-421*i*A, M-710*i*C
Group2	F-200*i*B
Group3	R-2000*i*B/200T/220U/220US, R-2000*i*C/190U/210L/210WE/220U/270F/270R, M-410*i*B, M-410*i*C
Group4	M-900*i*A/150P/260L/350, M-900*i*B/280/280L/330L/360
Group5	M-900*i*A/400L/600, M-900*i*B/400L/700
Group6	M-430*i*A/2PH/4FH
Group7	M-430*i*A/2P
Group8	ARC Mate 100*i*C, ARC Mate 120*i*C, ARC Mate 100*i*D, ARC Mate 120*i*D, M-10*i*A, M-20*i*A, M-20*i*B, M-10*i*D, M-20*i*D, CR-4*i*A, CR-7*i*A, CR-14iA, CR-15*i*A, CR-35*i*A, LR Mate 200 *i*D
Group11	M-2*i*A, M-3*i*A
Group12	R-1000*i*A/120F-7B/130F

Using condition of flex type cable

(1) When routing cables in movable places, use a cable carrier.
(2) The bending radius (R) of the cable carrier is more than 200mm.
(3) The cable should be fixed to the cable carrier by using the clamp. (e.g. foam rubber)
(4) The size of the hole to support a cable in the cable carrier should be more than 110% of the cable size and should have the gap more than 3mm.
(5) When cables are laid in the cable carrier, pay attention for the cable not to be twisted.

Using condition of camera cable

(1) Do not kink the camera cable. Electrical characteristics may be degraded.
(2) In order to prevent connector deformation, before laying the camera cable, keep the minimum bending radius to avoid applying excessive vertical force.

Cable Route
In case of A-cabinet
Signal cable

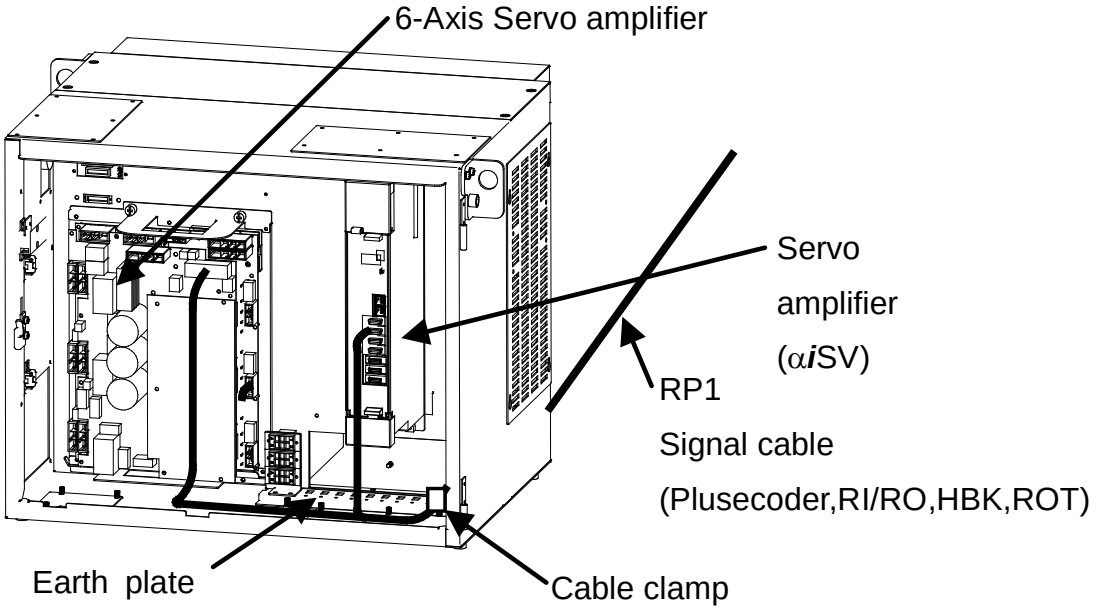

⚠ **CAUTION**
Signal cable should be clamped to earth plate by cable clamp.

Power/Brake cable

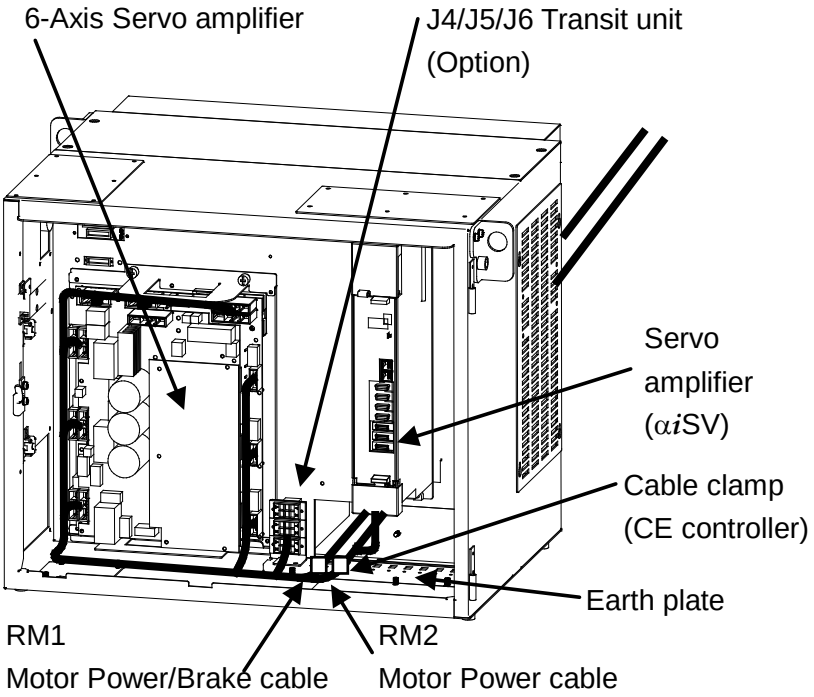

> ⚠ **CAUTION**
> Power/Brake cable should be clamped to earth plate by cable clamp.

In case of B-cabinet
Signal cable

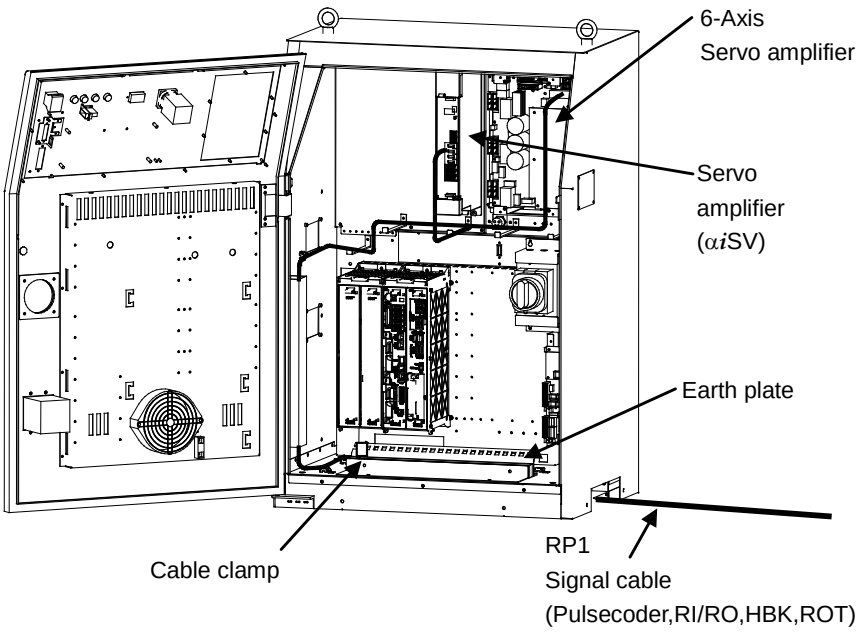

> ⚠ **CAUTION**
> Signal cable should be clamped to earth plate by cable clamp.

Power/Brake cable

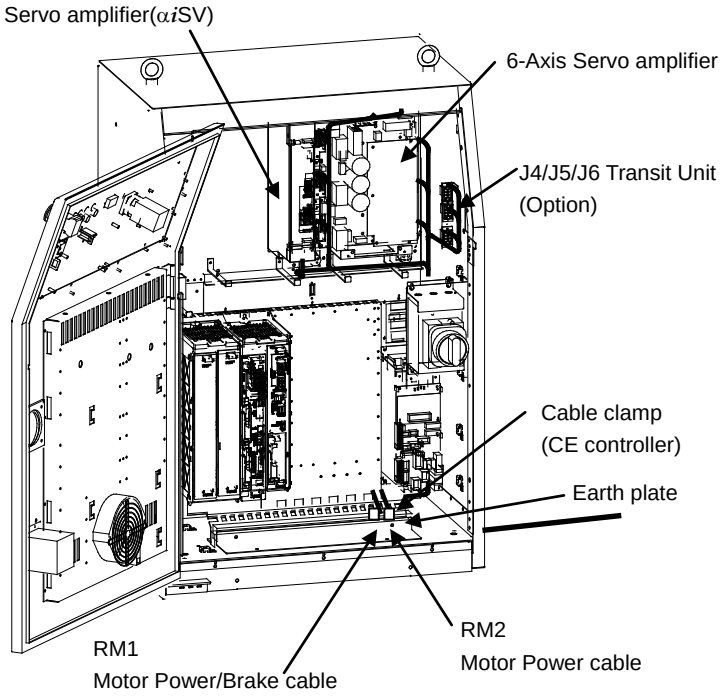

> ⚠ **CAUTION**
> Power/Brake cable should be clamped to earth plate by cable clamp.

Robot Model

Group1: R-1000*i*A(except /120F-7B/130F),
R-2000*i*B(expect /200T/220U/220US),
R-2000*i*C(expect /190U/210L/210WE/220U/270F/270R),
R-2000*i*D/165FH/210FH, M-420*i*A,M-421*i*A,M-710*i*C

Group2: F-200*i*B

Group11: M-2*i*A, M-3*i*A

Detail of cable connection to servo amplifier

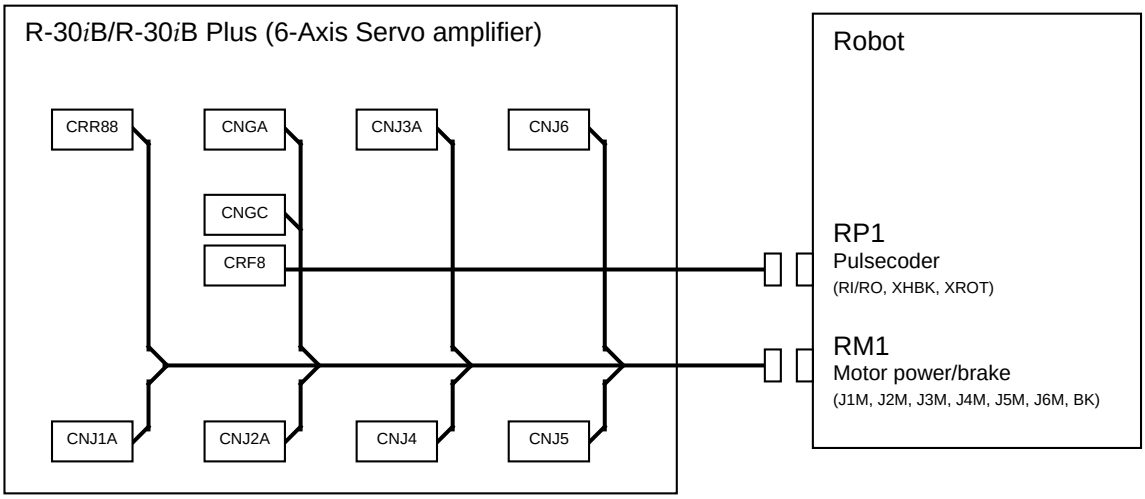

Fig.3.3.1 (a) Robot connection cable (Group1, Group2, Group11)

Robot Model
Group3: R-2000*i*B/200T/220U/220US, R-2000*i*C/190U/210L/210WE/220U/270F/270R, M-410*i*B, M-410*i*C

Detail of cable connection to servo amplifier

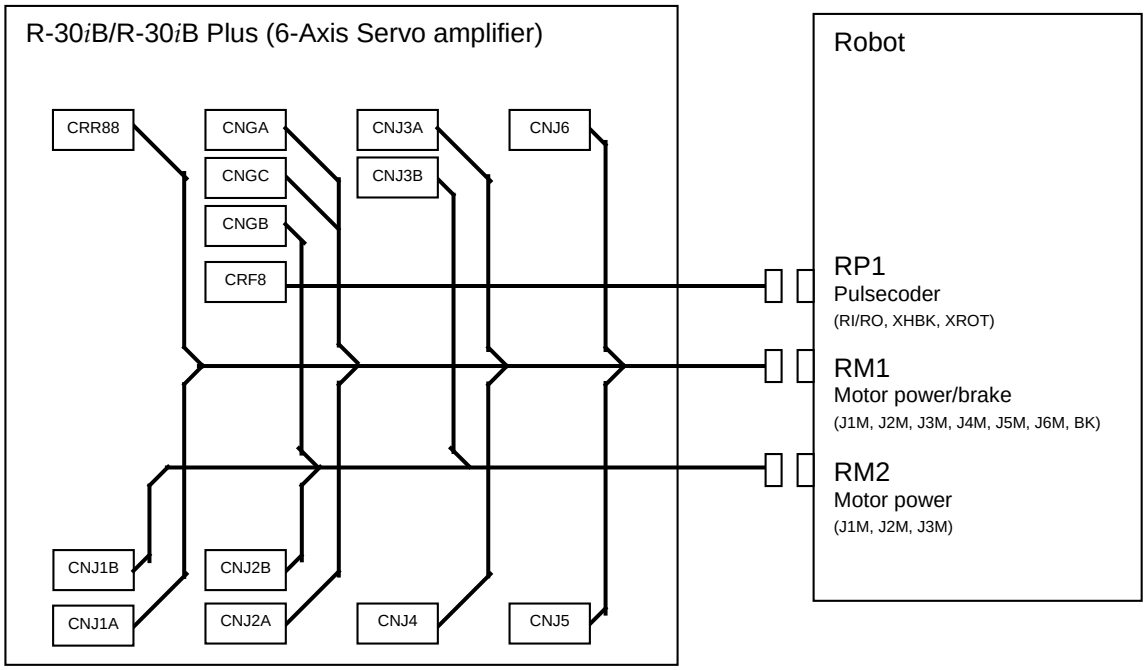

Fig.3.3.1 (b) Robot connection cable (Group3)

Robot Model
Group4: M-900*i*A/150P/260L/350, M-900*i*B/280/280L/360
Detail of cable connection to servo amplifier

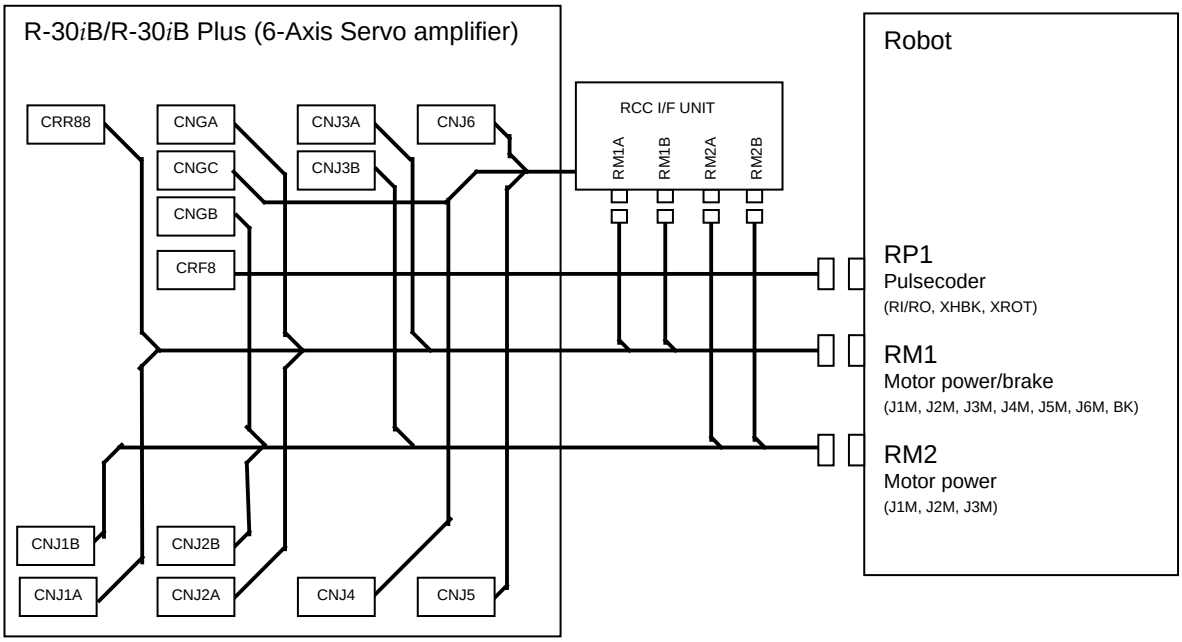

Fig.3.3.1 (c) Robot connection cable (Group4)

Robot Model
Group5: M-900*i*A/400L/600, M-900*i*B/400L/700
Detail of cable connection to servo amplifier

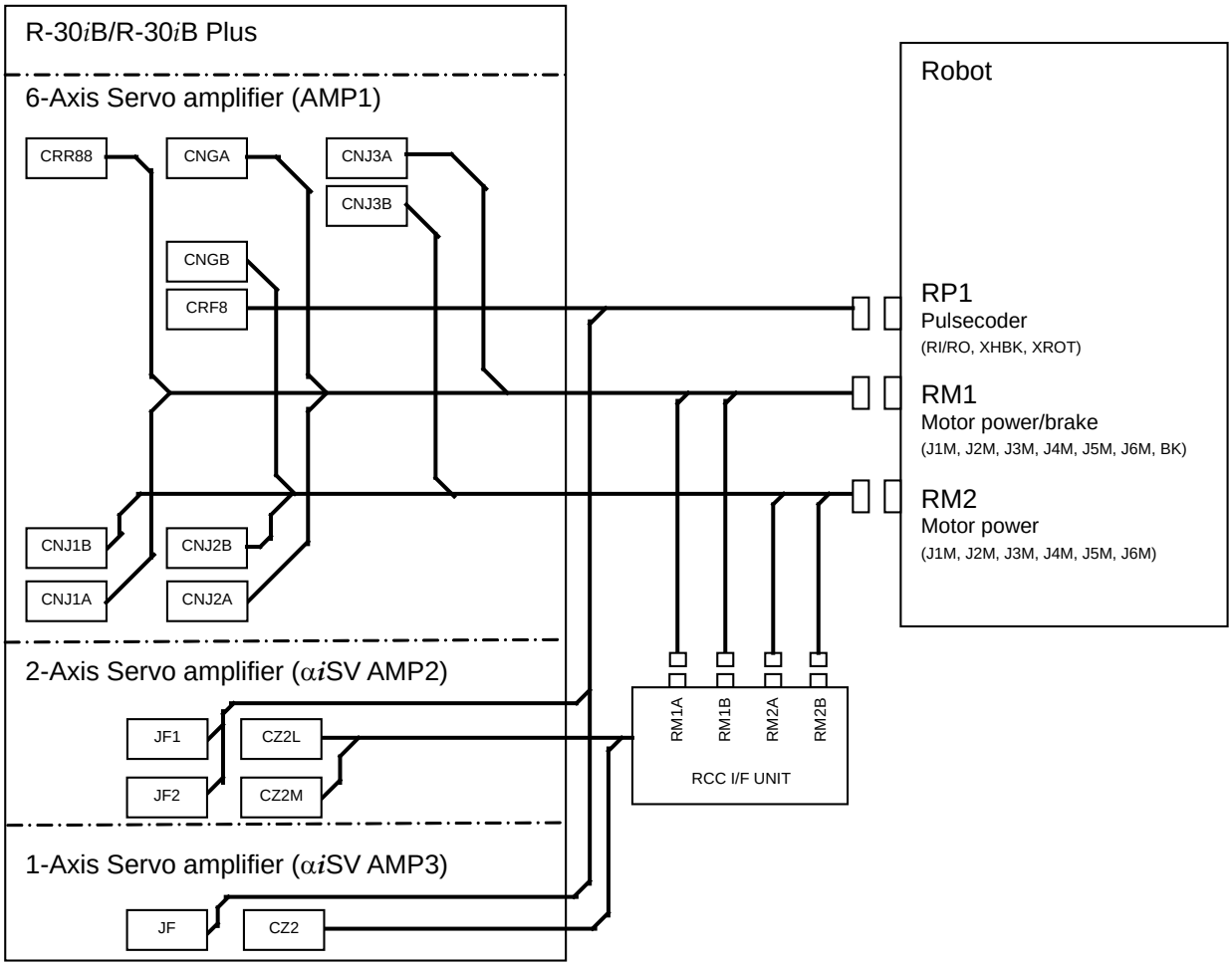

Fig.3.3.1 (d) Robot connection cable (Group5)

Robot Model
Group6: M-430*i*A/2PH/4FH
Detail of cable connection to servo amplifier

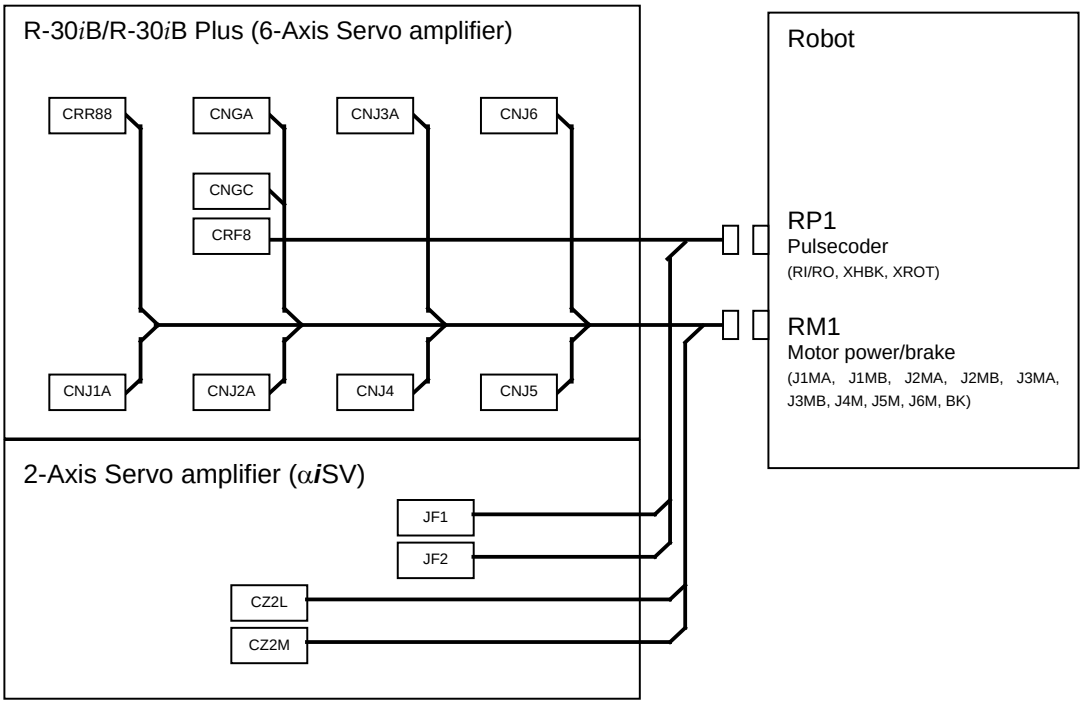

Fig.3.3.1 (e) Robot connection cable (Group6)

Robot Model
Group7: M-430*i*A/2P
Detail of cable connection to servo amplifier

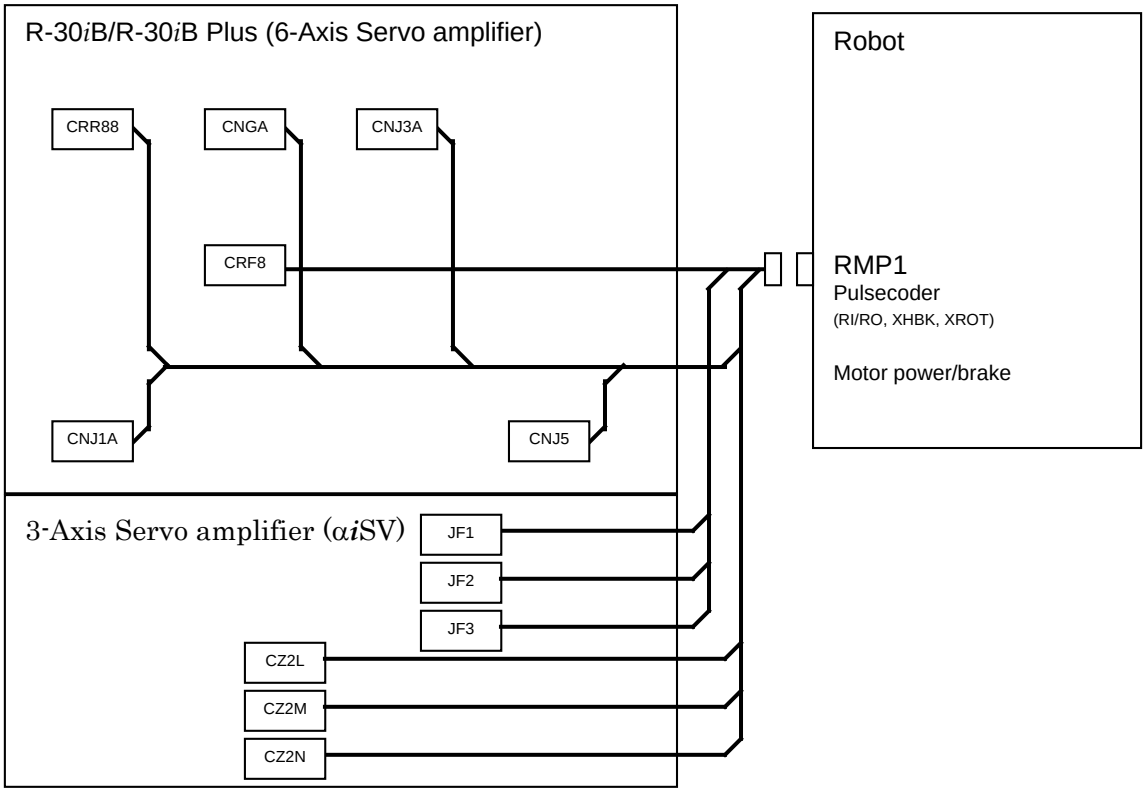

Fig.3.3.1 (f) Robot connection cable (Group7)

Robot Model
Group8:ARC Mate 100*i*C, ARC Mate 120*i*C, ARC Mate 100*i*D, ARC Mate 120*i*D, M-10*i*A, M-20*i*A, M-20*i*B, M-10*i*D,M-20*i*D, CR-4*i*A, CR-7*i*A, CR-14*i*A, CR-15*i*A, CR-35*i*A, LR Mate200*i*D

Detail of cable connection to servo amplifier

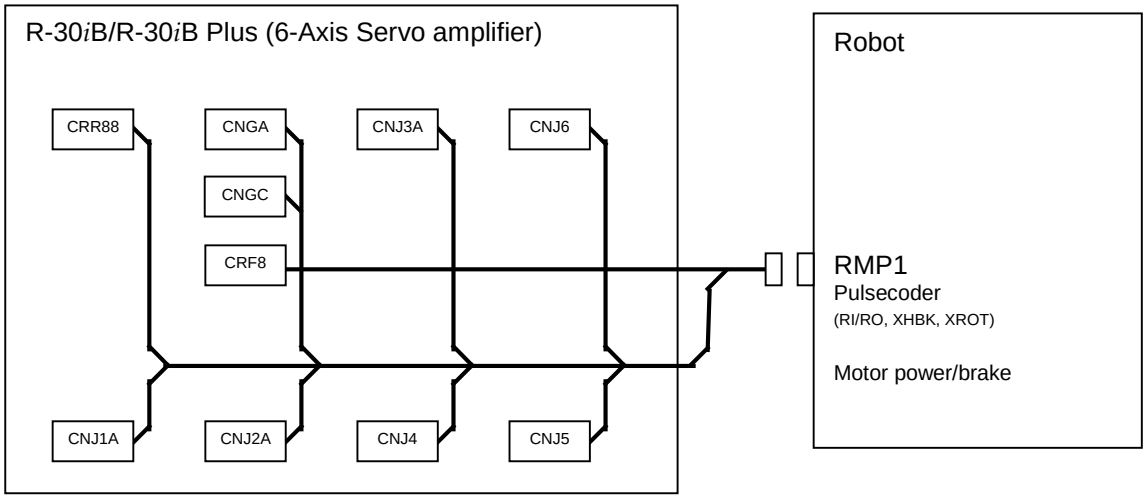

Fig.3.3.1 (g) Robot connection cable (Group8)

Robot Model
Group12: R-1000*i*A/120F-7B/130F

Detail of cable connection to servo amplifier

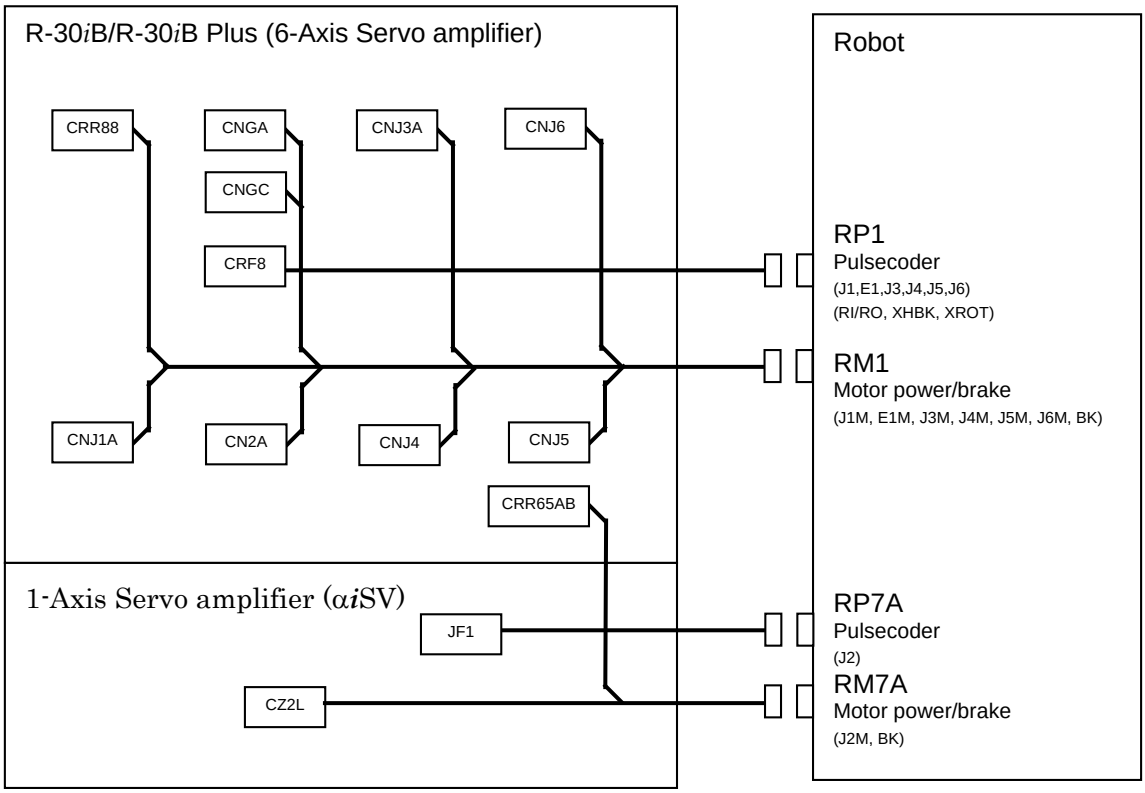

Fig.3.3.1 (h) Robot connection cable (Group12)

3.3.2 Teach Pendant Cable

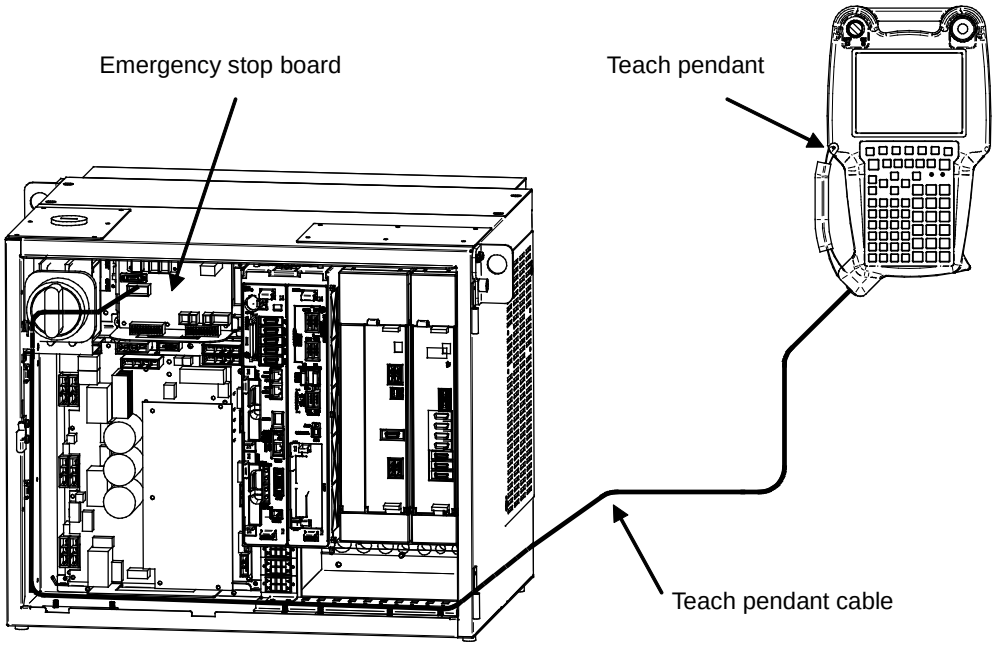

(A-cabinet)

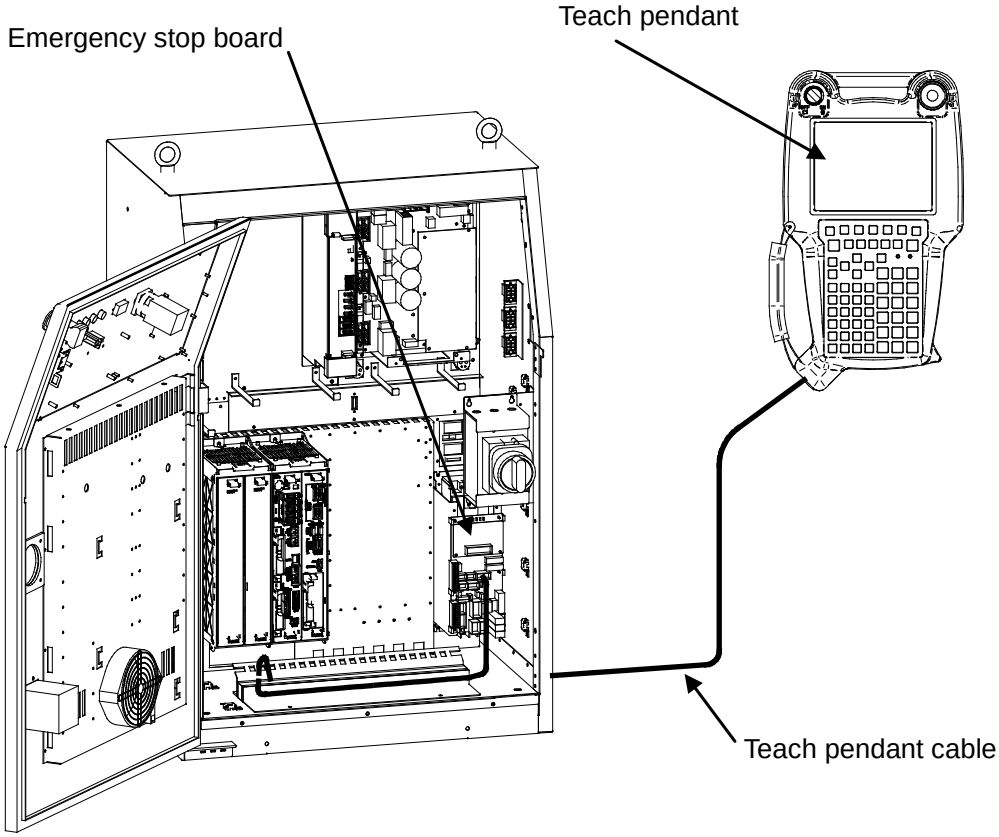

(B-cabinet)

Fig.3.3.2(a) Teach pendant cable

3.3.3 Connecting the Input Power

3.3.3.1 Connecting the input power cable

(1) Fig3.3.3.1 (a) shows the method of connecting the input power supply cable.
(2) Use the input power supply cable according to the following Table 3.3.3.1. However, the input power supply cable according to the breaker or the fuse of the input power supply (power distribution panel) connected to the robot controller must be used.
(3) Provide a class-D or better ground.
There shall be no switches or disconnects in the grounding conductor.
The resistance to the ground must not exceed 100Ω.
Use a thick wire to withstand the maximum current used.

In case of NRTL controller
Grounding/Bonding to comply with NEC Article 250 or CEC Section 10 as appropriate.
Provide a grounding conductor of equivalent gauge as the supply conductors.

Table 3.3.3.1 Conductor size and terminal size of input power supply cable

Input Voltage	Input power source capacity (Refer to CONNECTIONS 5.3)	Conductor size of AC power supply cable	Terminal size of AC power supply cable	Conductor size of earth cable	Terminal size of earth cable
400V	All robot	AWG10 or more (Note 1)	M5	WARNING 2	M5
200V	15KVA or more	AWG8 or more (Note 1)	M8	WARNING 2	M5
200V	12KVA or less	AWG10 or more (Note 1)	M5	WARNING 2	M5

⚠ **WARNING**
1 The input power cable according to the breaker or the fuse capacity of the input power supply (power distribution panel) connected to the robot controller must be used.
2 Use conductor of earth cable size is as well as the AC power supply cable size.
3 Disconnection of protective earth ground may impair the protection provided by the system.

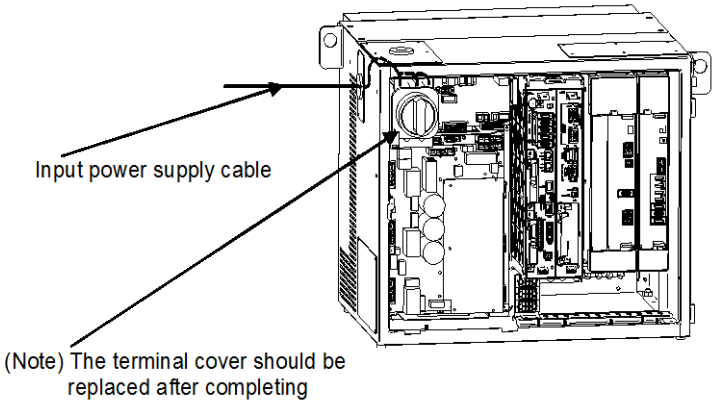

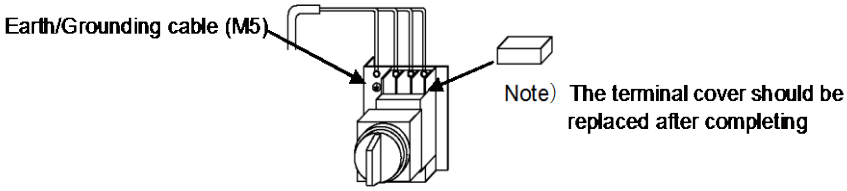

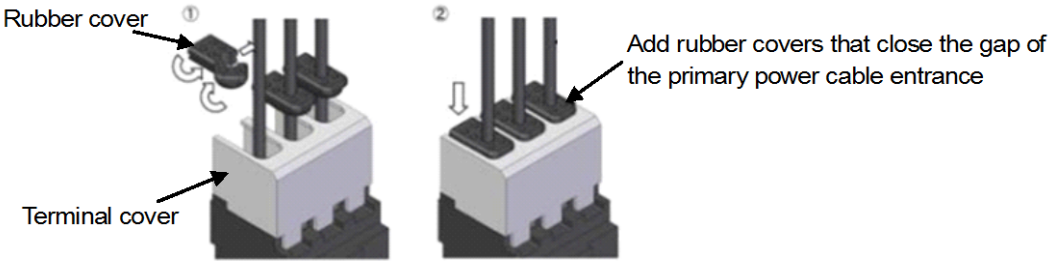

(A-cabinet)

> ⚠ **WARNING**
> The terminal cover for primary terminal of main breaker should be replaced after completing.

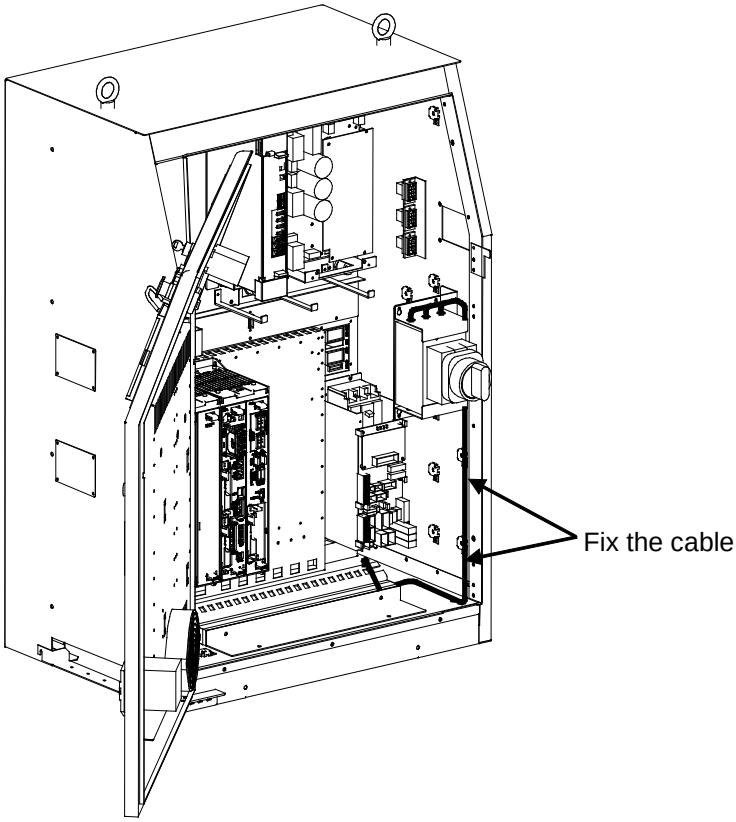

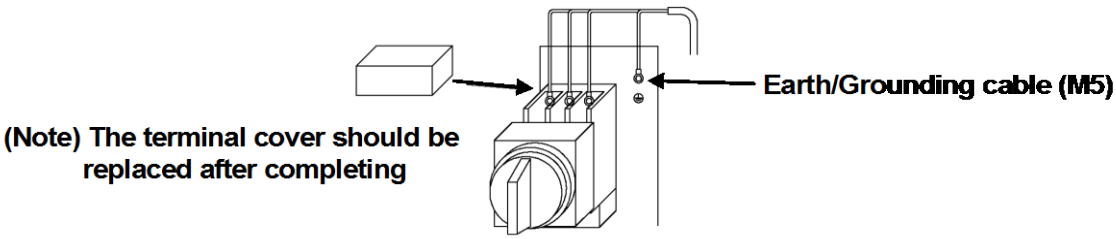

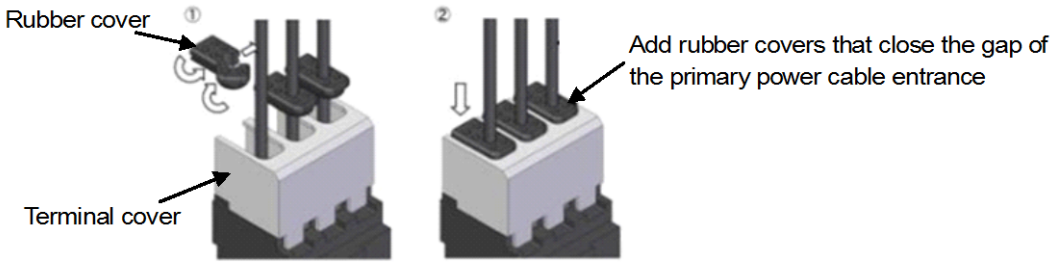

(B-cabinet)

> ⚠ **WARNING**
> The terminal cover for primly terminal of main breaker should be replaced after completing.

Fig.3.3.3.1(a) Connecting the input power cable

3.3.3.2 Leakage breaker

(1) The motor is driven by the PWM inverter system using a power transistor bridge. A high-frequency leakage current flows through the stray capacitance between the ground and the motor coils, power cable, and amplifier. This might cause the leakage-current circuit breaker or leakage-protection relay installed in the path of the power supply to cut out.
Use the following leakage current circuit breaker for inverters to prevent incorrect operation.

(2) Leakage breaker using robot controller has sensitive electric current of 30mA.

Table 3.3.3.2 Example of leakage current circuit breaker for inverters

Manufacture	Type
Fuji Electric Co., Ltd.	EG A series or later SG A series or later
Hitachi, Ltd.	ES100C type or later ES225C type or later
Matsushita Electric Works, Ltd.	Leakage current circuit breaker, C type or later Leakage current circuit breaker, KC type or later

NOTE
In case of CE/single-phase controller, if this controller is connected to TT-power system, use the leakage breaker with sensitivity current of 30mA or more. (If the isolated transformer is installed, no leakage breaker is required).

3.3.3.3 Check input voltage

Setting of transformer tap is necessary depending on the input voltage.
The tap is set to the specified voltage before shipment. However, check it referring to section 6.2 in MAINTENANCE before supplying power (before the breaker switch is turned on).

3.3.3.4 ON/OFF timing by the breaker

If the power supply is turned on, turned off, and then turned on again repeatedly in a short time, the controller may not start up. If the power is turned off before the controller is completely started up (it takes about 30 seconds), wait for at least 10 seconds before turning on the power again.

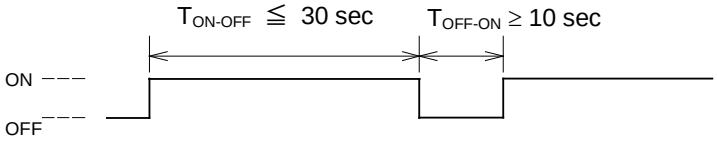

The power is turned off within 30 seconds after it has been turned on

3.3.4 Connecting the External Power Supply ON/OFF Switch

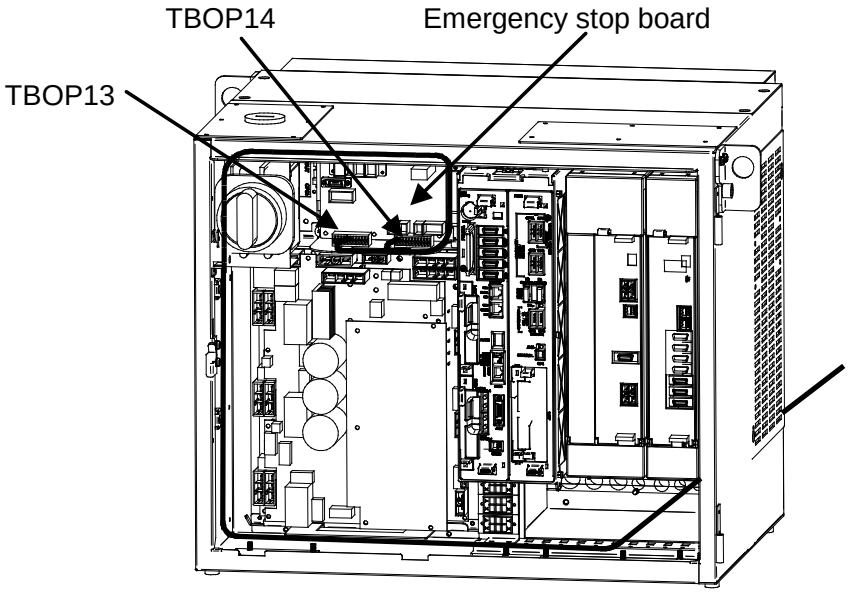

(A-cabinet)

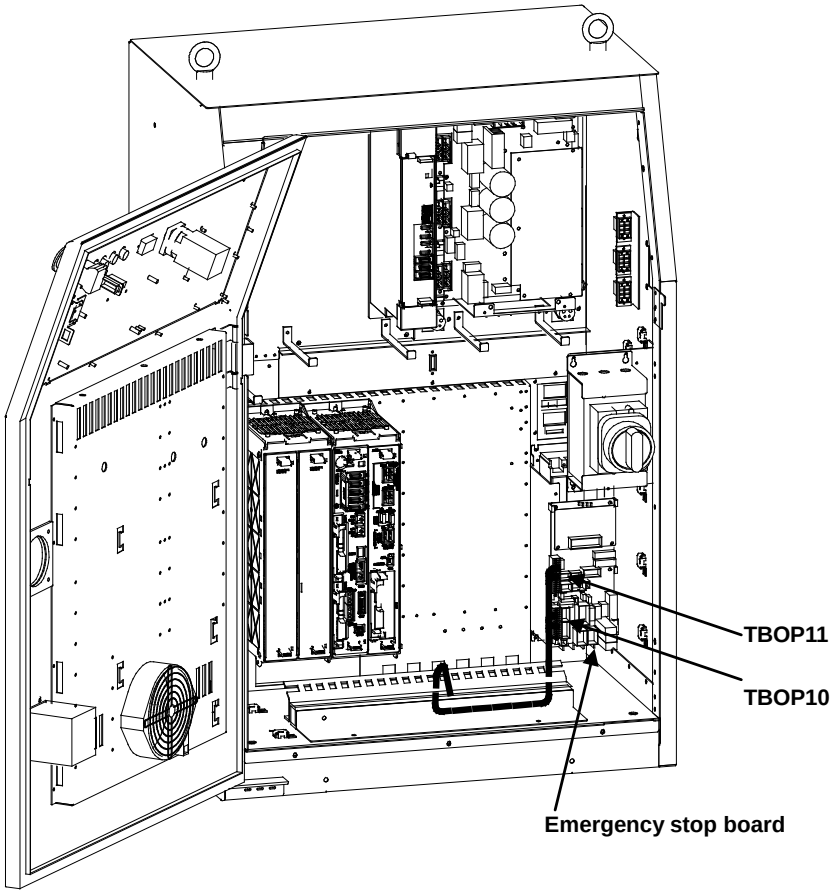

(B-cabinet)

Fig.3.3.4 (a) Connection of the external power supply ON/OFF switch

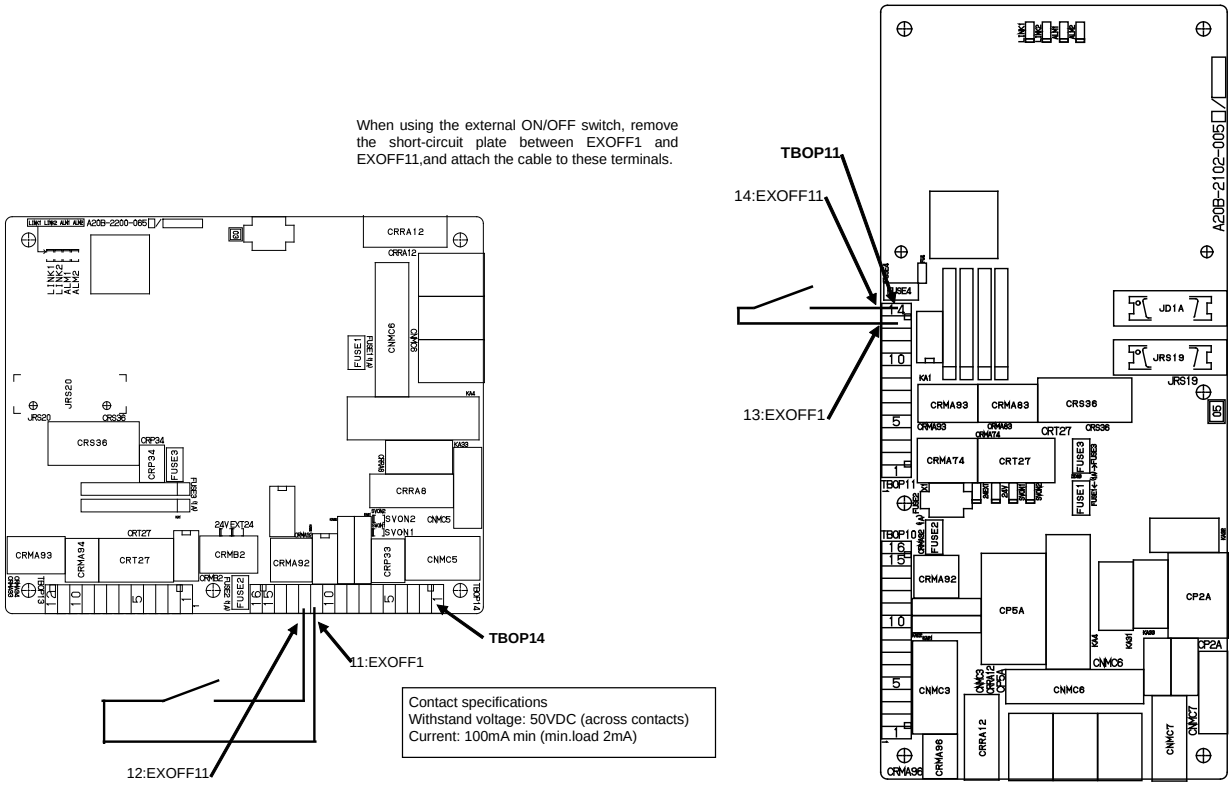

(A-cabinet) **(B-cabinet)**

Fig.3.3.4 (b) Emergency stop board

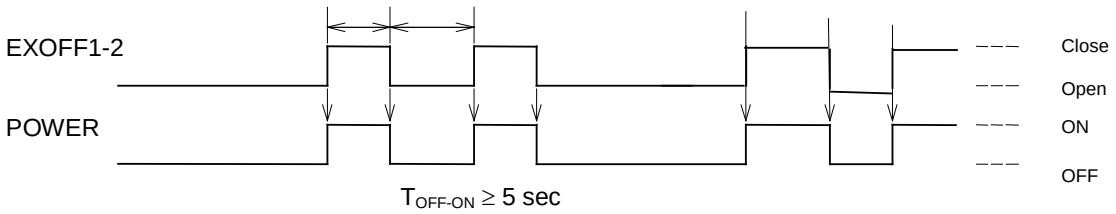

NOTE

1 When the external power supply ON/OFF switch is set to ON (closed), the controller can be turned on and off by using the circuit breaker.

2 When the external power supply ON/OFF switch is set to OFF (open), the controller cannot be turned on and off by using the circuit breaker.

Fig.3.3.4 (c) Connection of the external power supply switch ON and OFF

3.3.5 Connecting the External Emergency Stop

After connecting the safety signals such as external emergency stop signal or safety fence signal, verify that,

・All safety signals stop the robot as intended.

・There is no mistake in connection of safety signals.

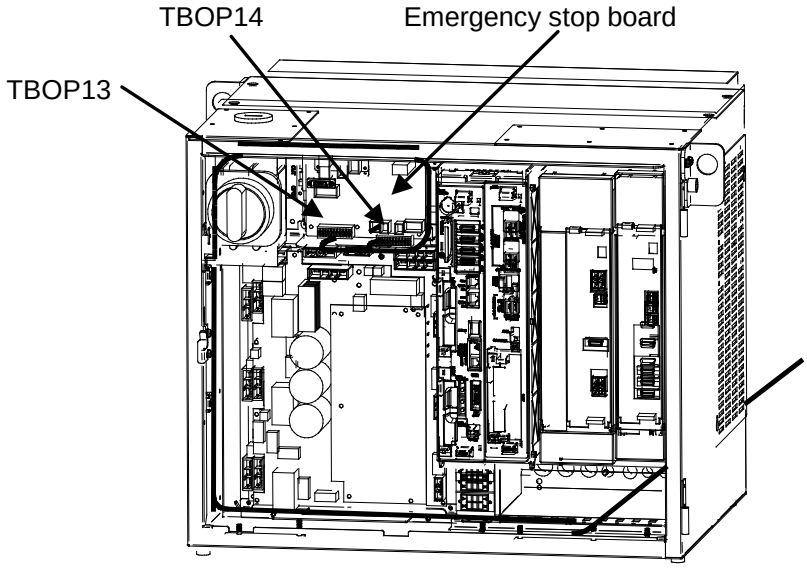

(A-cabinet)

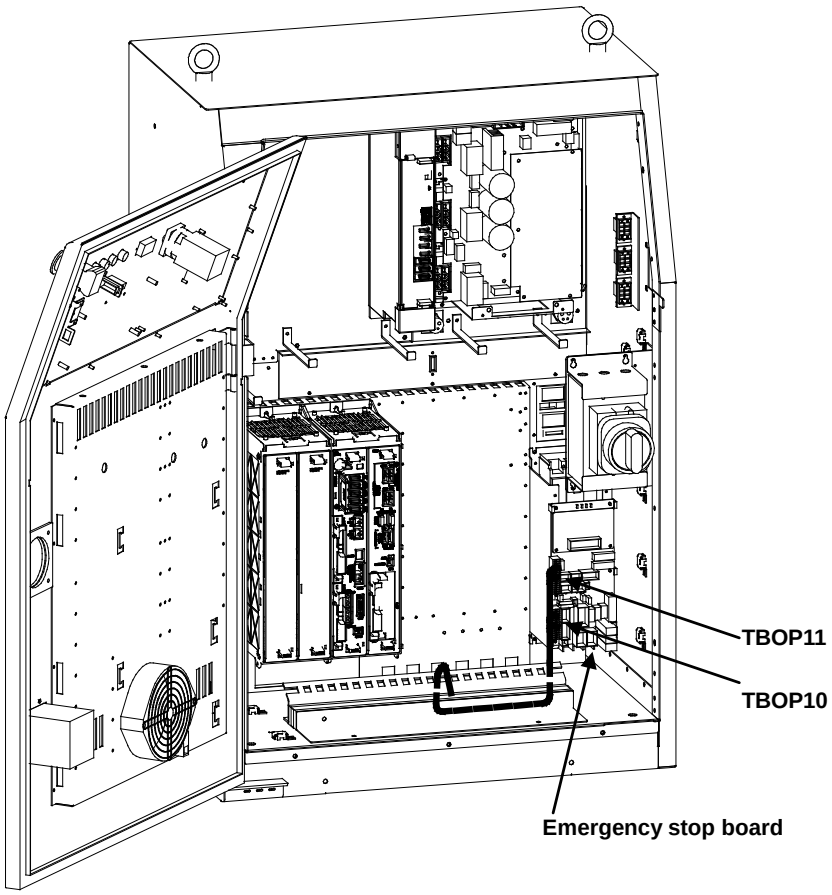

(B-cabinet)

Fig.3.3.5 (a) Connecting the external emergency stop

External emergency stop output

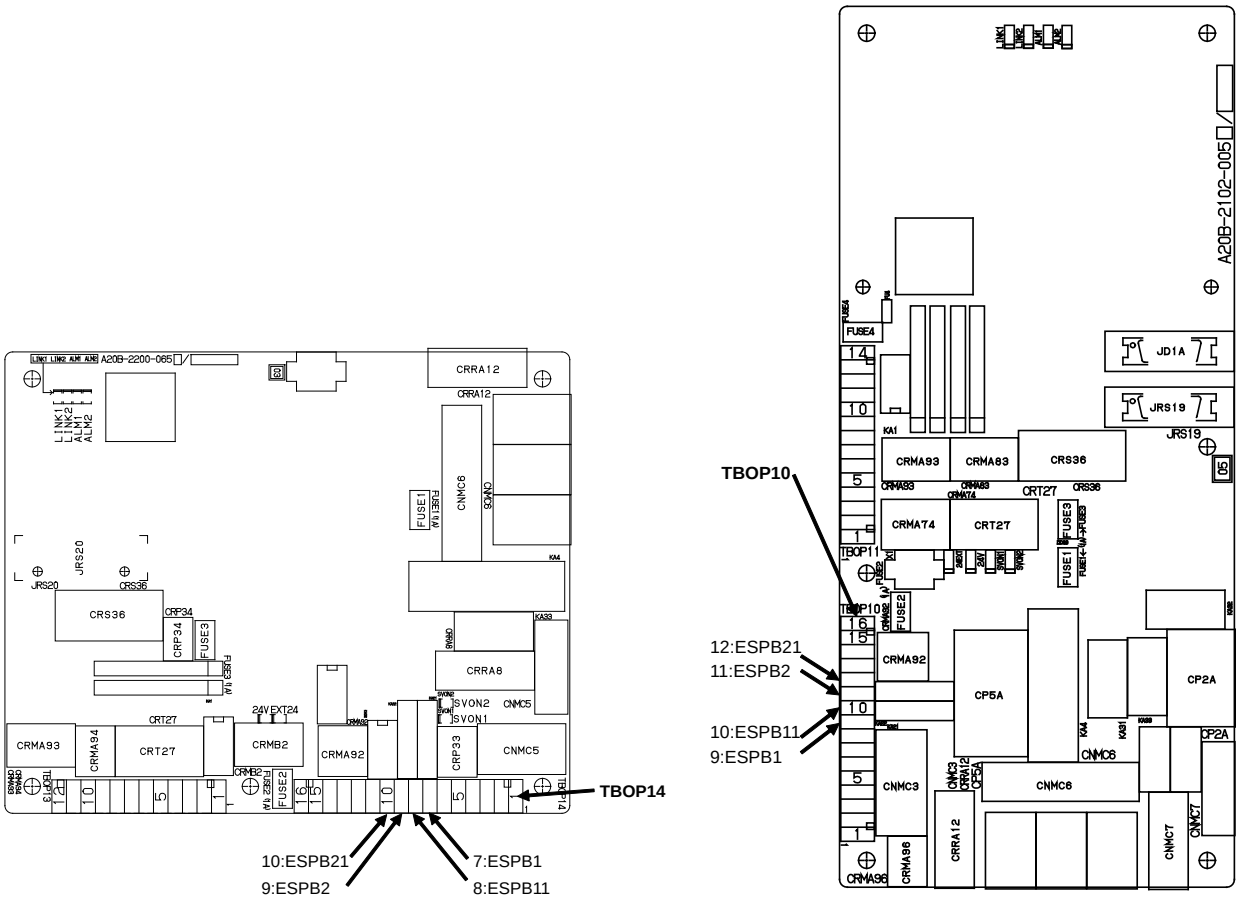

(A-cabinet) **(B-cabinet)**

Fig. 3.3.5 (b) Emergency stop board

For the circuit, see Fig. B (m) (n) in Appendix B, "TOTAL CONNECTION DIAGRAM".

Signal	Description	Rated load	Min. load
ESPB1 —— ESPB11 ESPB2 —— ESPB21	The contact is open when one of the TP emergency stop button or the Operator panel emergency stop button is pressed. The contact is also open while the controller is powered off regardless of status of emergency stop buttons. By connecting external power supply to the emergency stop circuit, the contact works even while the robot controller is powered off. (See “External power connection” of this section) The contact is closed during normal operation.	Resistor load DC 30V : 5 A	(Reference value) DC5V 10mA

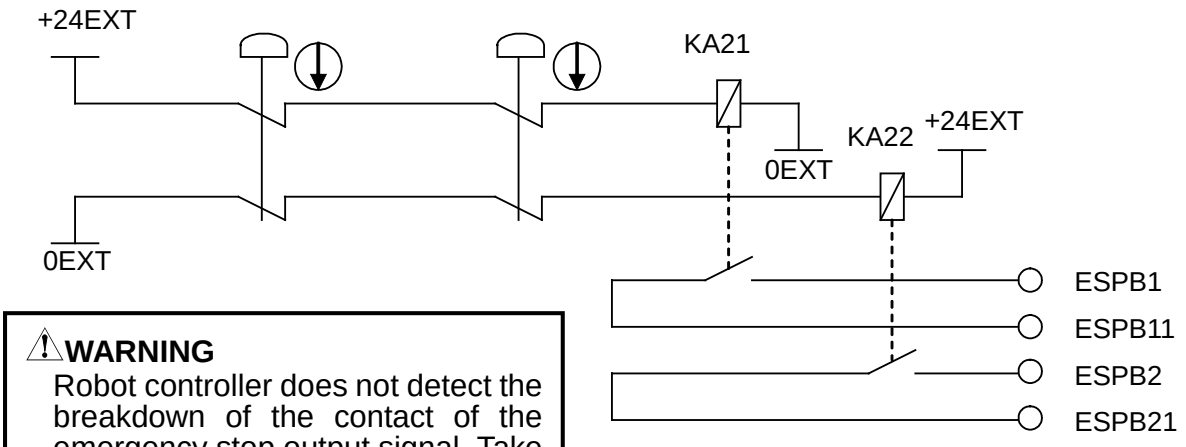

⚠WARNING
Robot controller does not detect the breakdown of the contact of the emergency stop output signal. Take countermeasures such as inspecting the duplicated contacts, or using a safety relay circuit that can detect the breakdown.

Example of the connection with the safety relay unit

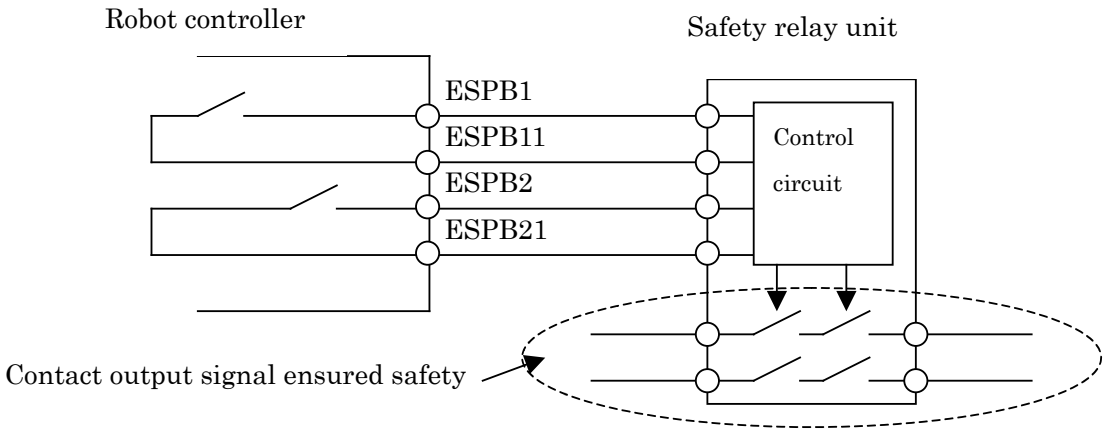

External power connection

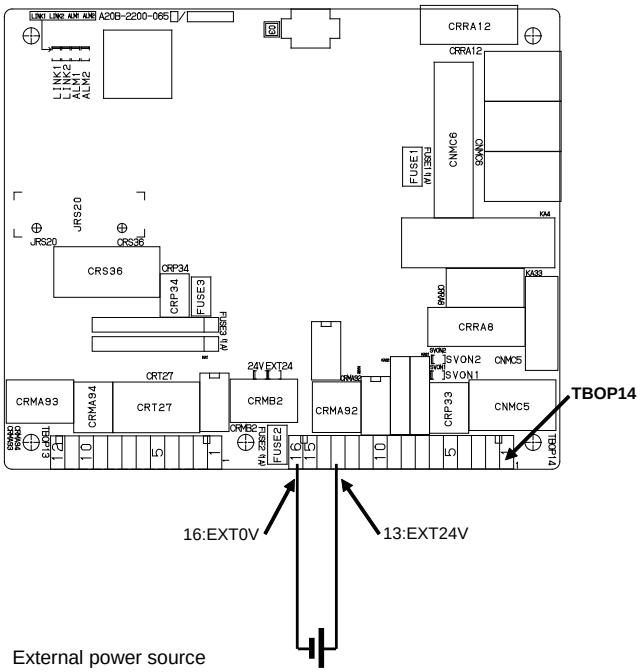

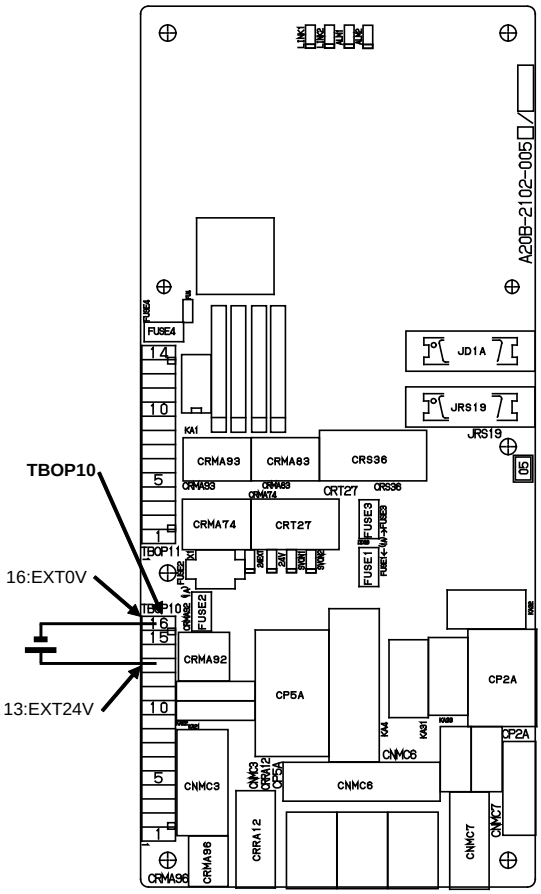

External power source
- +24V(±10%)
- More than 300mA
- EMC Compliant(CE mark controller)

(A-cabinet) **(B-cabinet)**

Emergency stop board

The relays for the emergency stop input and output can be separated from the controller's power. Please connect the external +24V instead of the internal +24V, if the emergency stop output must not affect the controller's power.

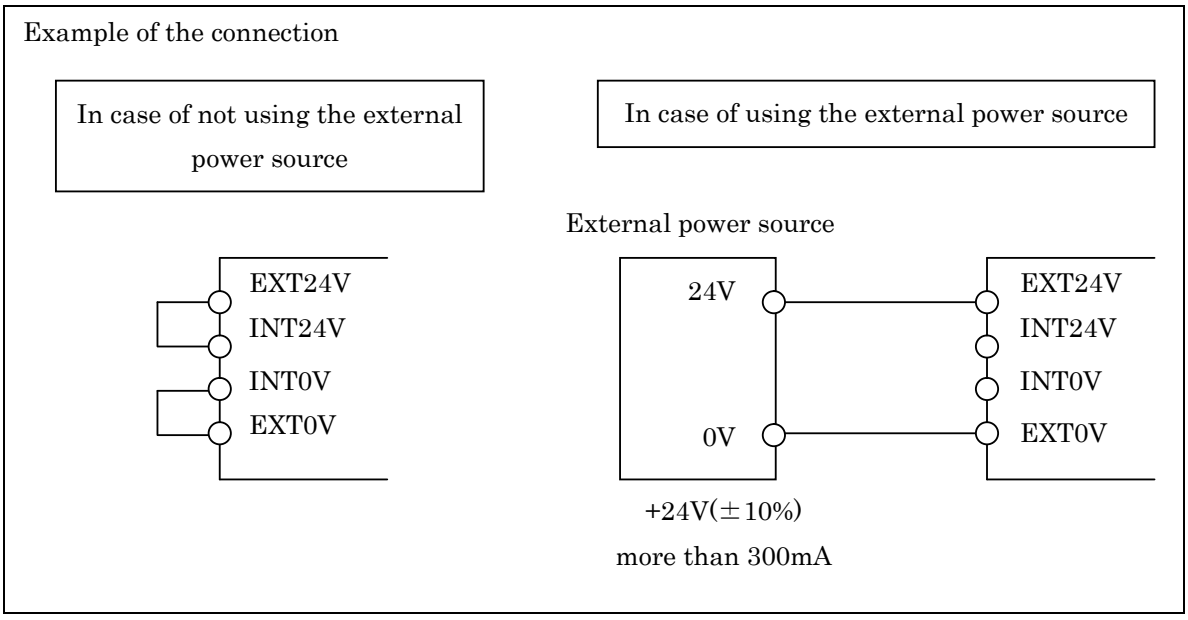

External emergency stop input

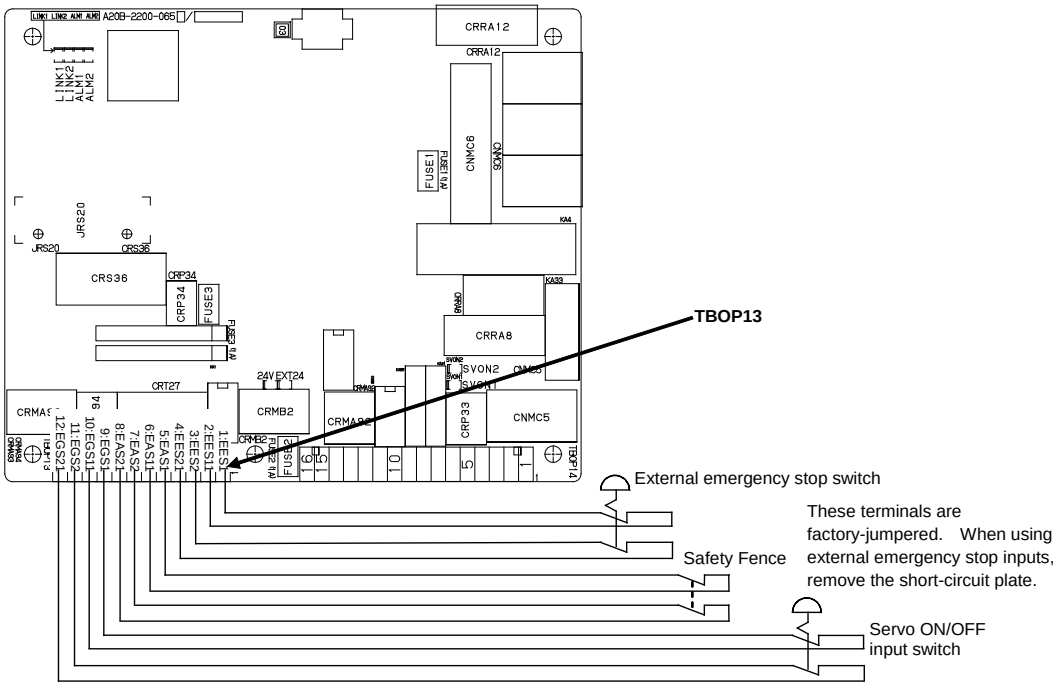

Emergency stop board (A-cabinet)

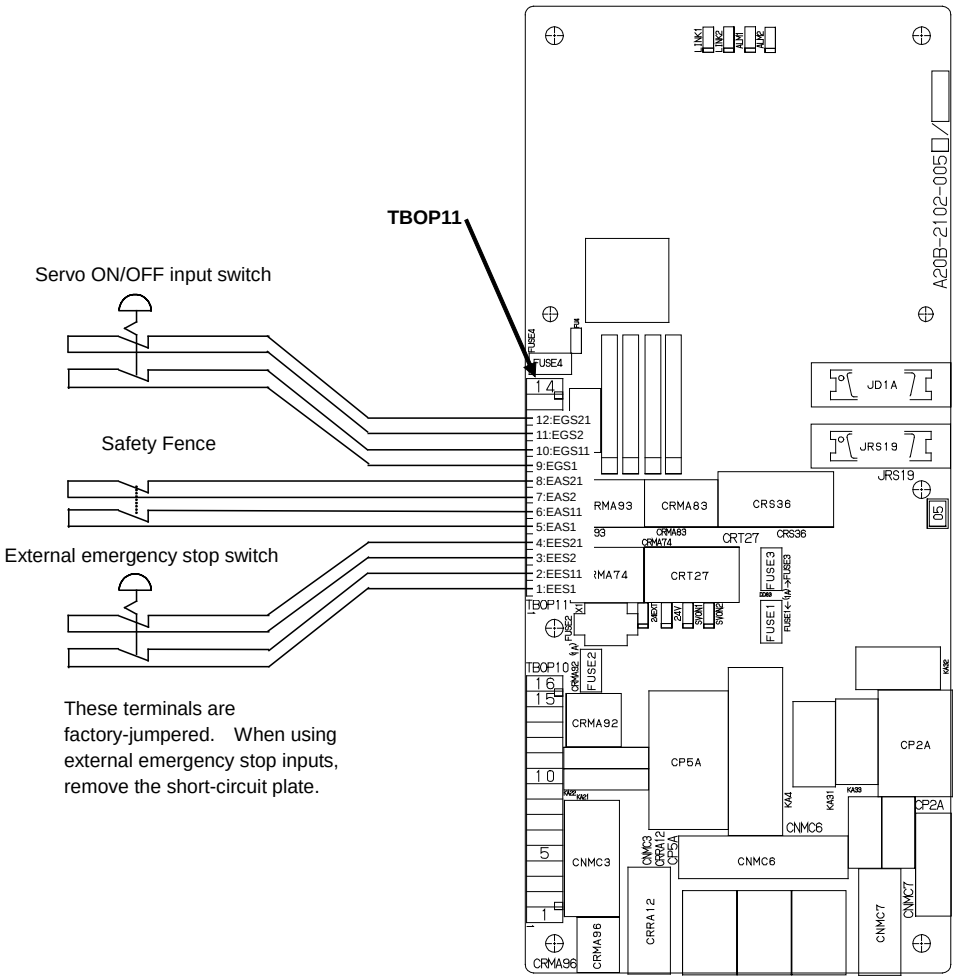

Emergency stop board (B-cabinet)

Signal	Description	Current, voltage
EES1 EES11 EES2 EES21	Connect the contacts of the external emergency stop switch to these terminals. When the contacts are open, the robot stops according to predetermined stop pattern. (Note 2) When using the contacts of a relay or contactor instead of the switch, connect a spark killer to the coil of the relay or contactor, to suppress noise. When these terminals are not used, jumper them.	Open and close of 24VDC 0.1A (Note 1)
EAS1 EAS11 EAS2 EAS21	These signals are used to stop the robot safely when the safety fence gate is opened during operation in the AUTO mode. When the contacts are open in the AUTO mode, the robot stops according to predetermined stop pattern. (Note 2) In the T1 or T2 mode and the enabling device (the deadman switch) is held correct position, the robot can be operated even when the safety fence gate is open. When using the contacts of a relay or contactor instead of the switch, connect a spark killer to the coil of the relay or contactor, to suppress noise. When these terminals are not used, jumper them.	Open and close of 24VDC 0.1A (Note 1)
EGS1 EGS11 EGS2 EGS21	Connect the contacts of the servo-off input switch to these terminals. . When the contacts are open, the robot stops according to predetermined stop pattern. (Note 2) When using the contacts of a relay or contactor instead of the switch, connect a spark killer to the coil of the relay or contactor, to suppress noise. When these terminals are not used, jumper them.	Open and close of 24VDC 0.1A (Note 1)

NOTE

1. Use a contact whose minimum applicable load is 5 mA or less.
2. See Chapter 7 in SAFETY PRECAUTIONS.

Examples of connection of duplicate safety signals

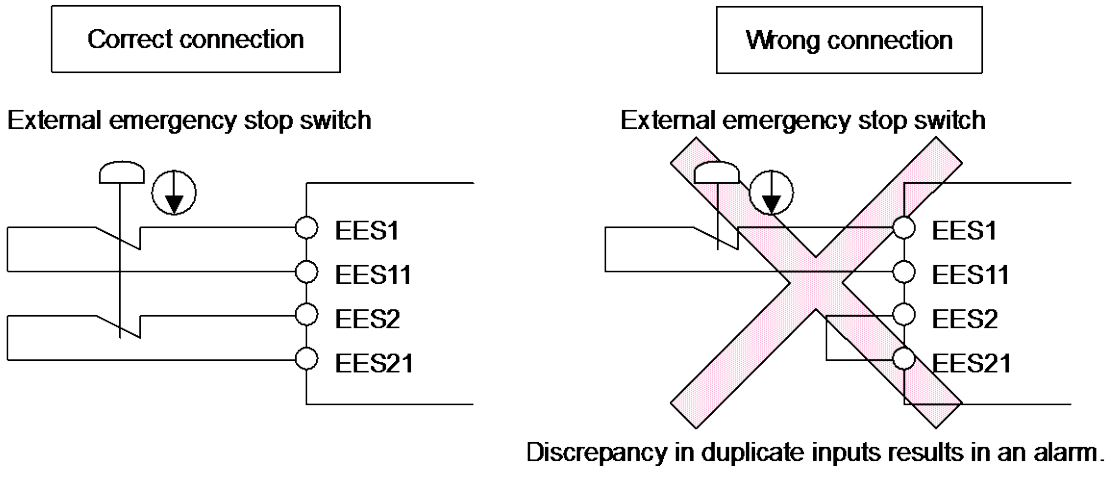

Input timing of duplicate safety signals

Duplicate inputs are used for signals such as the external emergency stop signal, safety fence signal, and servo off signal so that a response is made even when a single failure occurs. The statuses of these duplicate input signals must always be activated at the same timing according to the timing specifications provided in this section. The robot controller always checks that the statuses of the duplicate inputs are the same, and if the controller finds a discrepancy, it issues an alarm. If the timing specifications are not satisfied, an alarm may be issued because of a signal discrepancy.

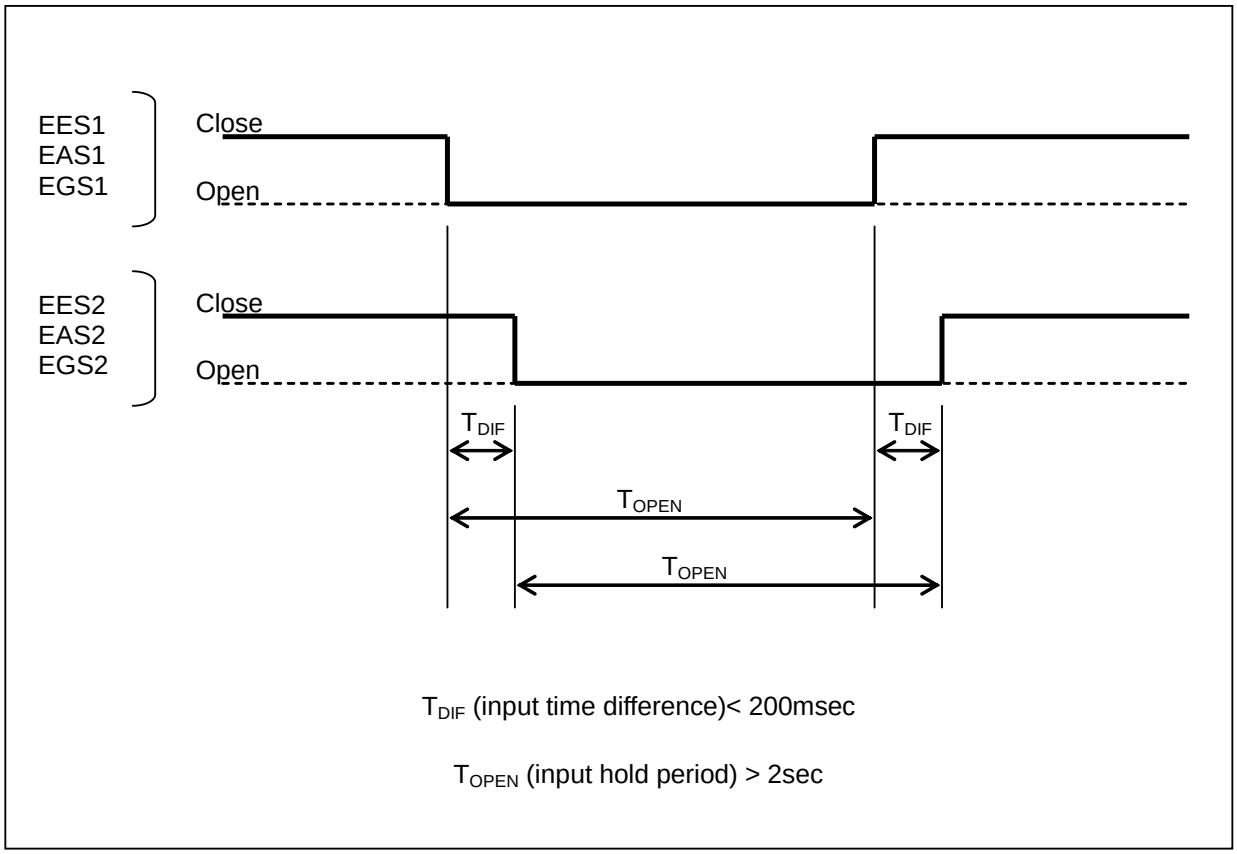

Fig.3.3.5 (c) Input timing of duplicate safety signals

The interval of reset signal

If reset is repeated within a short time, the charging circuit to the servo amplifier may break down. After reset, wait for at least 20 seconds before resetting again.

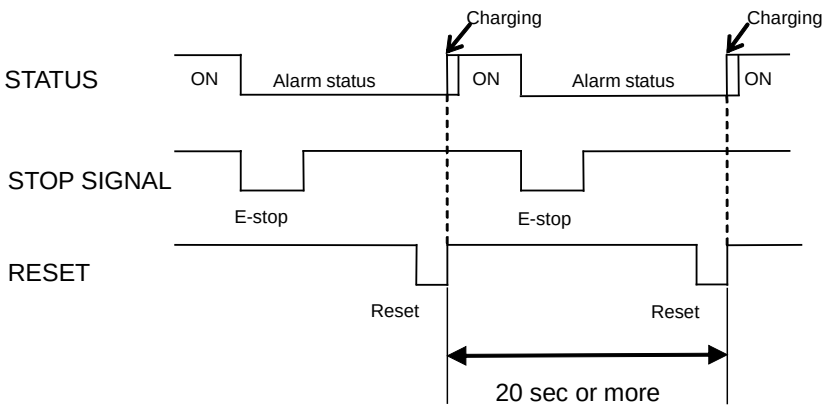

Fig.3.3.5 (d) Re-reset interval after reset

Connecting external on/off and external emergency stop signal input/output wires

	FANUC's specification	Manufacturer's specification (WAGO)	Remark
16-pole terminal block (TBOP14:A-cabinet) (TBOP10:B-cabinet)	A63L-0002-0154#116	734-116	
14-pole terminal block (TBOP11:B-cabinet)	A63L-0002-0154#114	734-114	
12-pole terminal block (TBOP13:A-cabinet)	A63L-0002-0154#112	734-112	
Operation lever	A63L-0002-0154#230-M	734-230	2 pieces of 734-230 and operation manual are included in FANUC's specification

1. Detach the plug connector block from the emergency stop board.
2. Use the lever or insert the tip of a flat-blade screwdriver into the manipulation slot and push down its handle.
3. Insert the end of the signal wire into the wire slot.
4. Pull out the lever or screwdriver.
5. Attach the plug connector block to the emergency stop board.

> ⚠ **CAUTION**
> Do not insert a wire into the wire hole of a plug connector or pull it out with the plug connector block mounted on the emergency stop board; otherwise, the emergency stop board may be damaged.

FANUC recommends the lever (A05B-2600-K030) for connecting the signal wire to the plug connector block instead of flat-blade screwdriver.

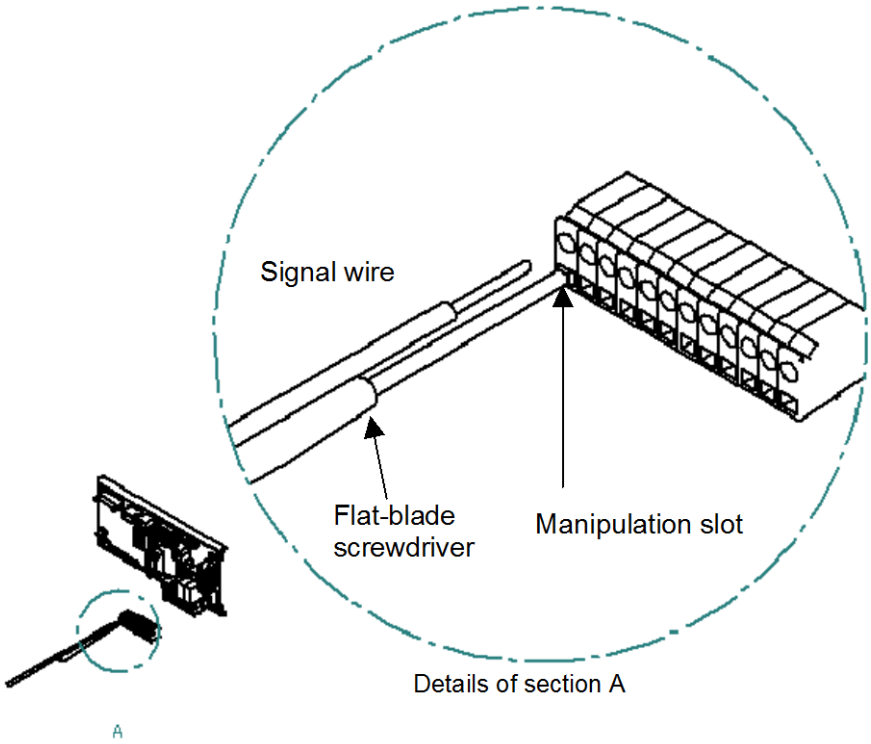

3.3.6 Connecting the Non-Teaching Enabling (NTED) Signal (CRMA96)(For B-cabinet)

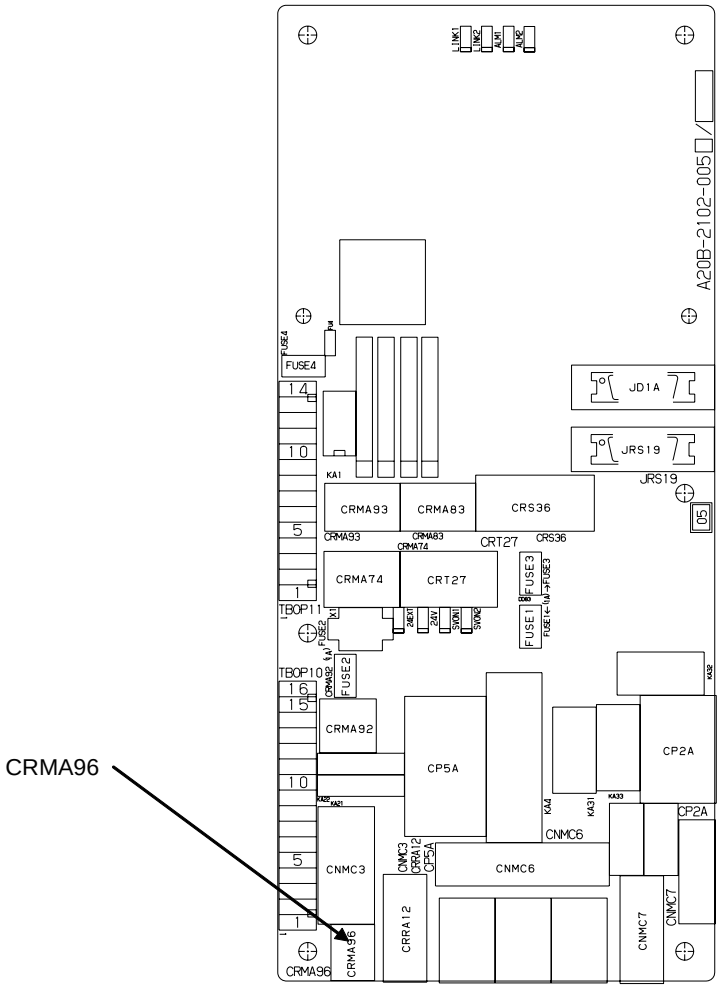

Emergency stop board (B-cabinet)
Fig.3.3.6(a) Connecting the NTED Signal (B-cabinet)

NTED provides a way to connect an external enabling device to the robot. In the auto mode, robot moves without reference to the state of the switch connected with NTED signal. CRMA96 connector is provided in B-cabinet.
Refer to “APPENDIX B, Total connection Diagram Fig. B (m) (n)” for more information about NTED circuit.
Input timing of NTED signal must comply with rules in the section “Input timing of duplicate safety signals”.

> ⚠ **CAUTION**
> After connecting a NTED switch, be sure to check the operation of this switch, the emergency stop button on the operator’s panel and operator box, and the emergency stop button on the teach pendant.

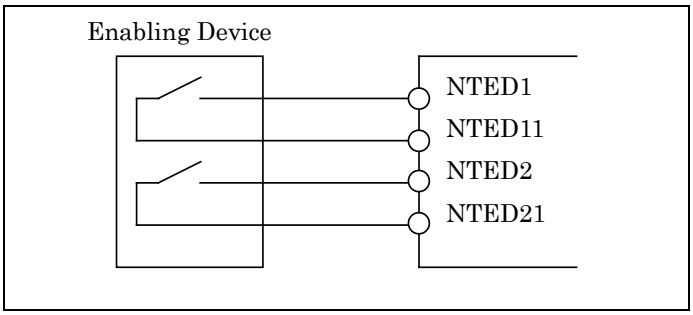

CRMA96 connector

A1	NTED1	B1	NTED11
A2	NTED2	B2	NTED21
A3	(DM1)	B3	(DM2)

CRMA96 connector Specification

	TE Connectivity Specification	FANUC Specification
Rece-housing	1-1318119-3	A63L-0001-0812#R06DX
Rece-contact(AWG18-22)	1318107-1	A63L-0001-0812#CRM

3.3.7 Connecting the Auxiliary Axis Brake (CRR65 A/B)

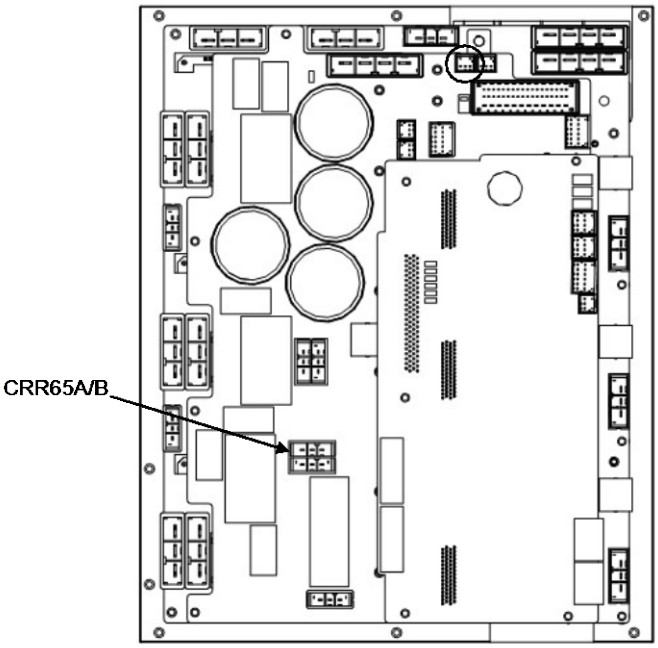

Fig.3.3.7(a) 6-axis servo amplifier

CRR65 A/B

A1	BKA1	B1	BKA2
A2		B2	
A3	COMMON	B3	COMMON

Specification

	TE Connectivity Specification	FANUC Specification
Rece-housing	1-178128-3	A63L-0001-0460#032KSX
Rece-contact	175218-2	A63L-0001-0456#ASL

3.3.8 Connecting the Auxiliary Axis Over Travel (CRM68)

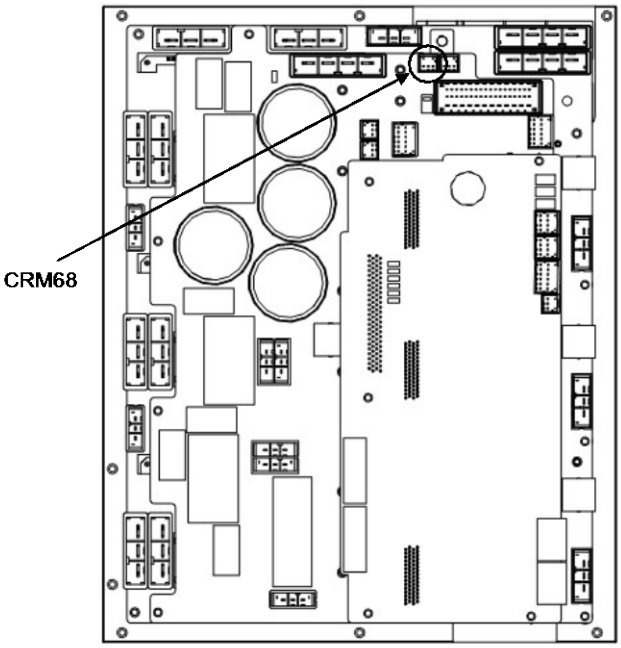

Fig.3.3.8(a) 6-axis servo amplifier

CRM68

A1	AUXOT1
A2	AUXOT2
A3	

Specification

	TE Connectivity Specification	FANUC Specification
Rece-housing	1-1318120-3	A63L-0001-0812#R03SX
Rece-contact	1318107-1	A63L-0001-0812#CRM

4 PERIPHERAL DEVICE, ARC WELDING, AND EE INTERFACES

R-30*i*B/R-30*i*B Plus I/O peripheral device interfaces include printed circuit boards and a unit selected according to the applications. Table 4 lists details of the printed-circuit boards and units. Figure 4 shows the locations of these boards and units.

Table 4 Peripheral device interface types

No.	Name	Drawing number	Number of I/O points				Remarks
			DI	DO	D/A	A/D	
1	Process I/O board JA	A05B-2600-J001	96	96 (Source type)	0	0	Installed in back plane
2	Process I/O board JB	A05B-2600-J002	40	40 (Source type)	0	0	Installed in back plane
3	Process I/O board MA	A05B-2600-J020	20	16 (Source type)	0	0	Installed in A-cabinet
4	Process I/O board KA	A05B-2600-J010	40	40 (Source type)	3	2	Installed in A-cabinet top box
5	Process I/O board KB	A05B-2600-J011	40	40 (Source type)	2	0	Installed in A-cabinet top box
6	I/O Unit-MODEL A	A05B-2601-J130 (Base and interface unit)	Depending on selected I/O module.				A-cabinet (five slots)
		A05B-2603-J130 (Base and interface unit)					B-cabinet (five slots)

No.	Name	Drawing number	Number of I/O points				Remarks
			WI	WO	D/A	A/D	
7	Process I/O board MB	A05B-2600-J021	5	4 (Sink type)	2	0	Installed in A-cabinet

NOTE

1 General purpose I/O (DI/DO) is a number, which subtract an exclusive signal from the table value.
Example: Process I/O board JB
Table value Exclusive DI General purpose DI
DI;40 -18=22 points
Table value Exclusive DO General purpose DO
DO;40 -20=20 points

2 When there are slave units on the I/O Link and the power for control to these slave units is supplied from other than the robot controller, the power to the controller and the power to the slave units must be turned on and off at the following timings:
a) The power to the slave units must be turned on before or when the power to the controller, which is the master of the I/O Link, is turned on.
b) If the power to a slave unit is turned off after the system has started up, an I/O Link error occurs. To establish the I/O Link again, turn off the power to all units including the controller, then turn on the power to the units in the order described in a).

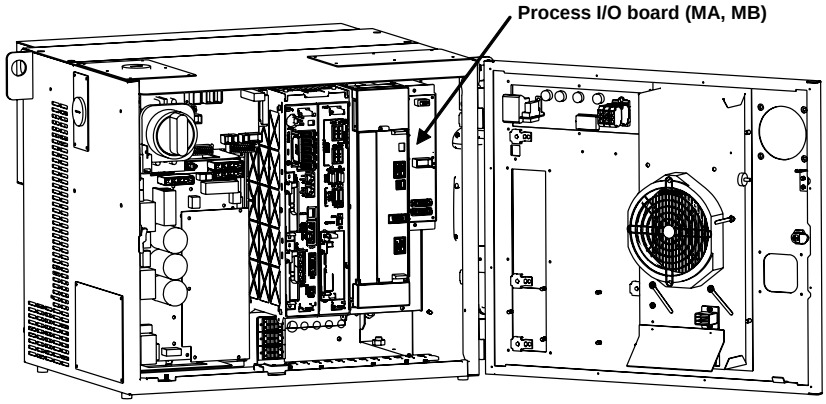

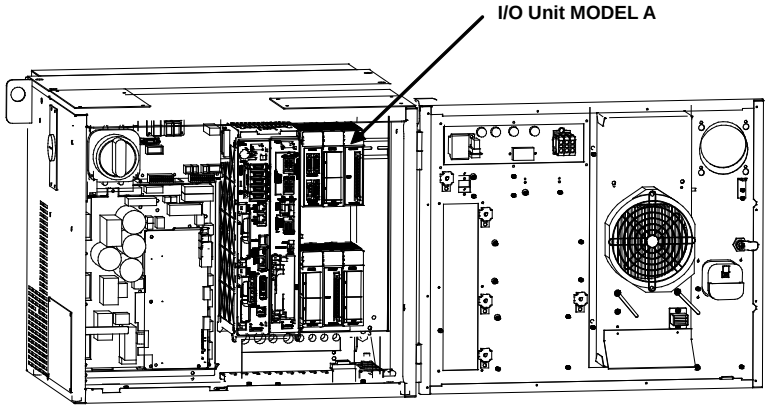

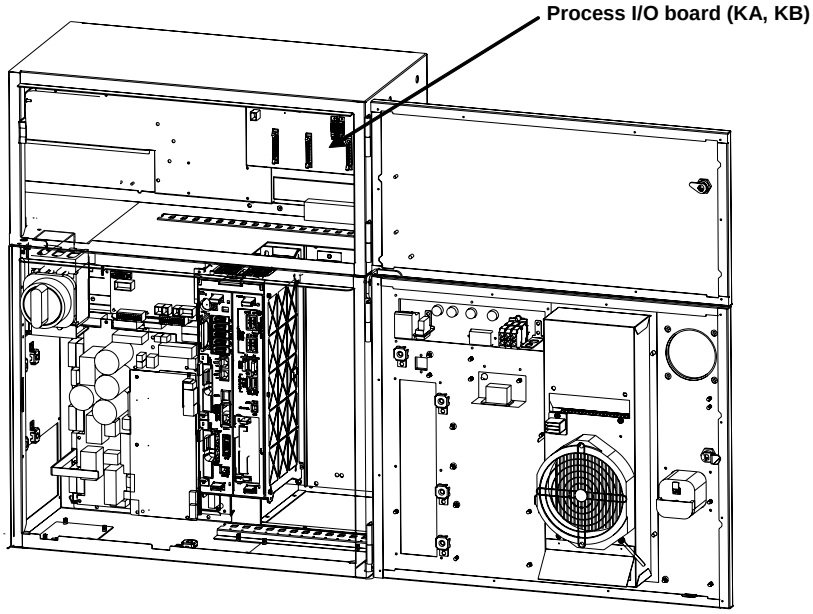

Fig.4(a) Locations of peripheral device interfaces (A-cabinet)

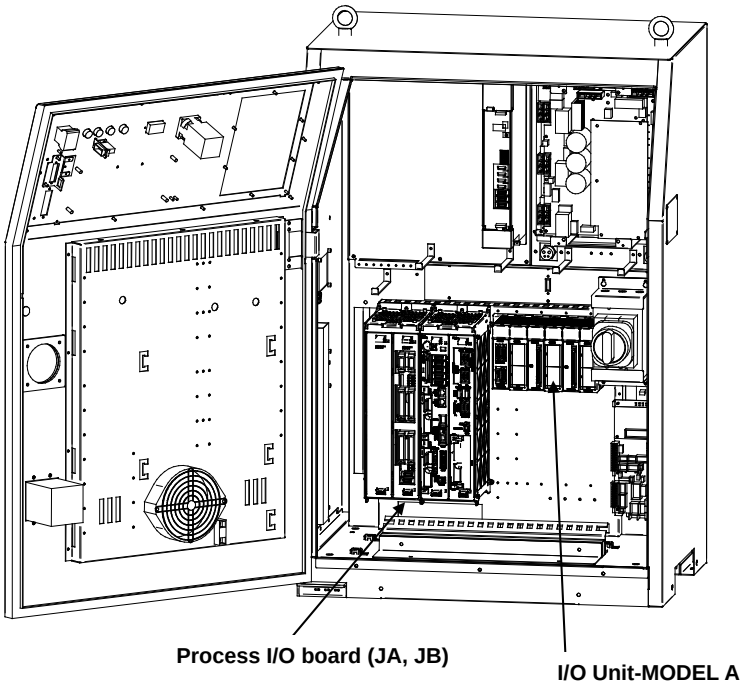

Fig.4(b) Locations of peripheral device interfaces (B-cabinet)

4.1 PERIPHERAL DEVICE INTERFACE BLOCK DIAGRAM

Following are a block diagram of the peripheral device interface and the specifications.

4.1.1 When Process I/O Board JA/JB is Used (B-cabinet)

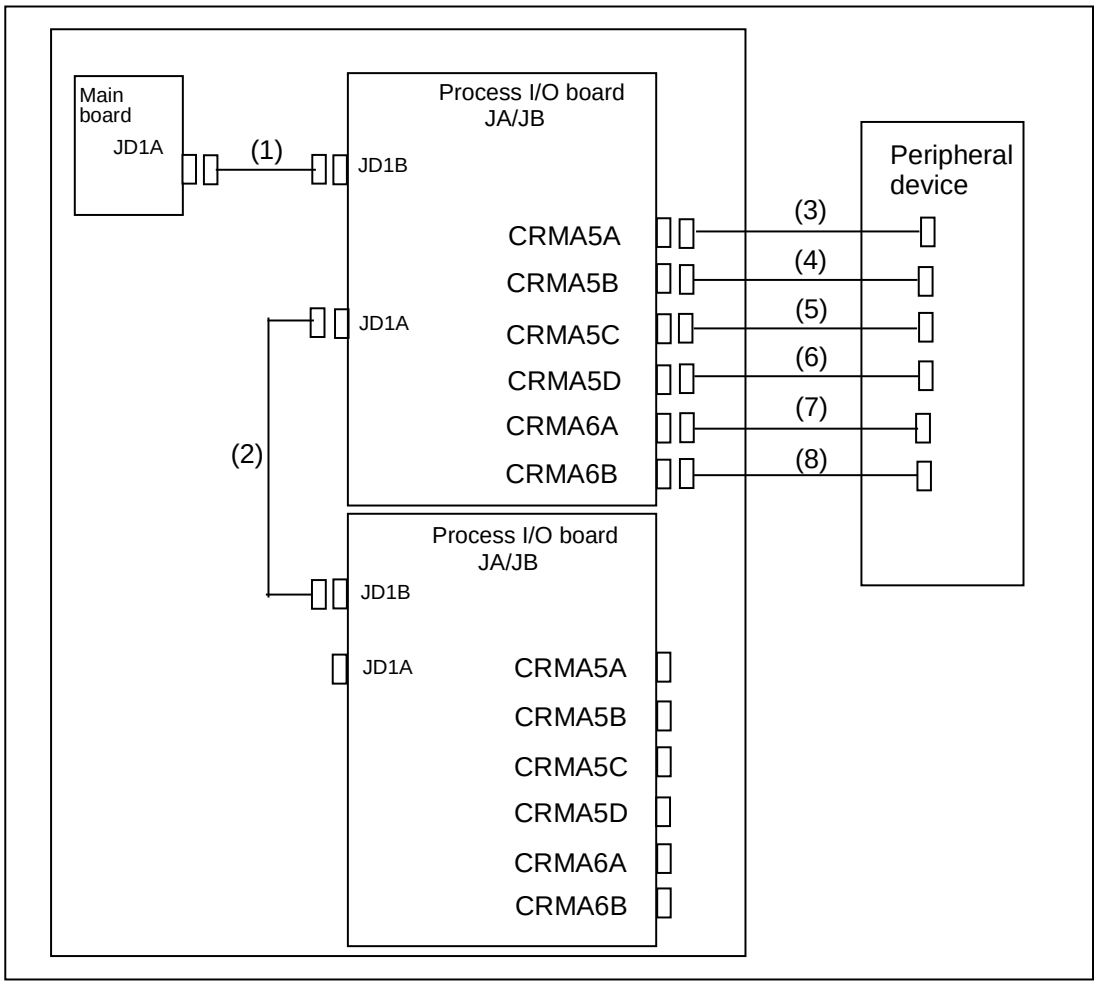

Fig.4.1.1(a) Block diagram of the process I/O board JA/JB

NOTE
The process I/O board JB does not have CRMA5C, CRMA5D, CRMA6A, and CRMA6B.

Number	Name	Drawing number	Remarks
(1)	I/O Link cable	A05B-2603-J170	Between main board and process I/O
(2)	I/O Link cable	A05B-2603-J171	Between process I/O and process I/O
(3) (4) (5) (6)	Peripheral device connection cable (Process I/O JA, JB)	A05B-2603-J200	Connected length: 10m (one)
		A05B-2603-J201	Connected length: 20m (one)
		A05B-2603-J202	Connected length: 30m (one)
(7) (8)	Peripheral device connection cable (Process I/O JA)	A05B-2603-J203	Connected length: 10m (one)
		A05B-2603-J204	Connected length: 20m (one)
		A05B-2603-J205	Connected length: 30m (one)

4.1.2 When Process I/O Board MA is Used (A-cabinet)

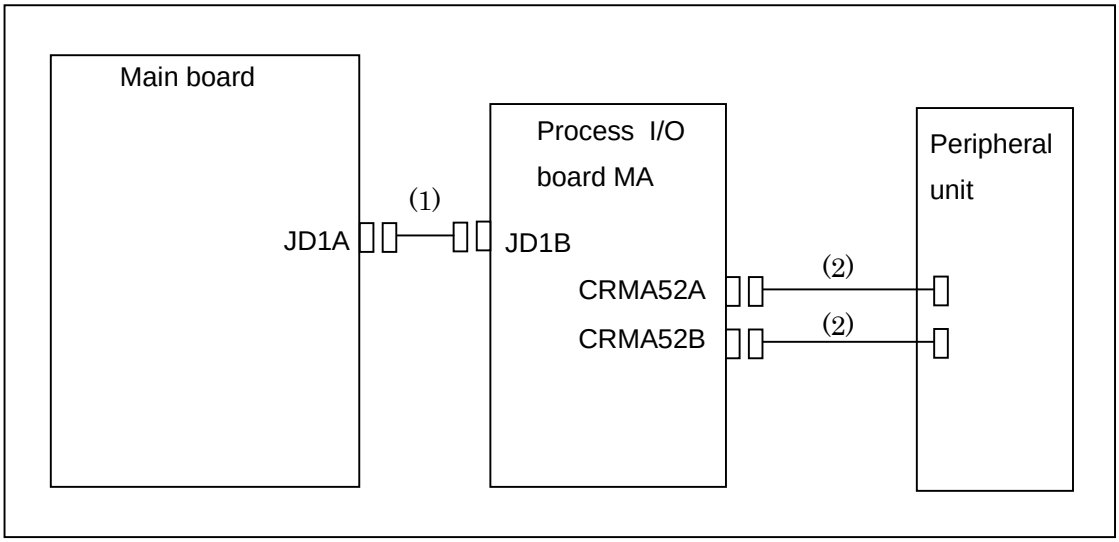

Fig.4.1.2(a) Block diagram of the process I/O MA

Number	Name	Drawing number	Remarks
(1)	I/O Link cable	A05B-2601-J172	
(2)	Peripheral device cable	A05B-2601-J240	Connection length 10m (one): CRMA52
		A05B-2601-J241	Connection length 20m (one): CRMA52
		A05B-2601-J242	Connection length 30m (one): CRMA52

4.1.3 When Process I/O Board MB is Used (A-cabinet)

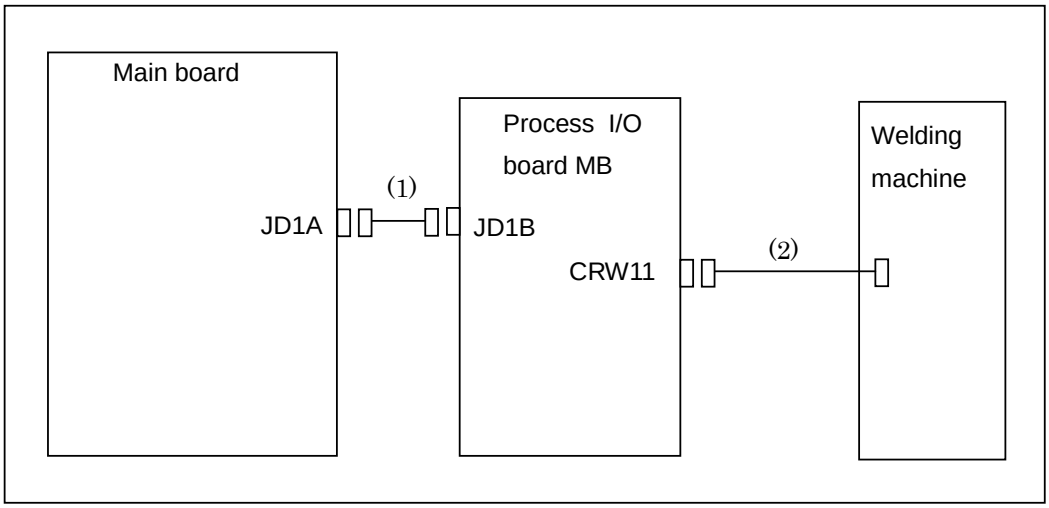

Fig.4.1.3(a) Block diagram of the process I/O MB

Number	Name	Drawing number	Remarks
(1)	I/O Link cable	A05B-2601-J174	
(2)	Welding machine connection cable (FANUC interface/elbow type)	A05B-2601-J246	Connection length 3m (one): CRW11
		A05B-2601-J247	Connection length 7m (one): CRW11
		A05B-2601-J248	Connection length 14m (one): CRW11
	Welding machine connection cable (FANUC interface/straight type)	A05B-2601-J250	Connection length 3m (one): CRW11
		A05B-2601-J251	Connection length 7m (one): CRW11
		A05B-2601-J252	Connection length 14m (one): CRW11

4.1.4 When Process I/O Board KA/KB is Used (A-cabinet)

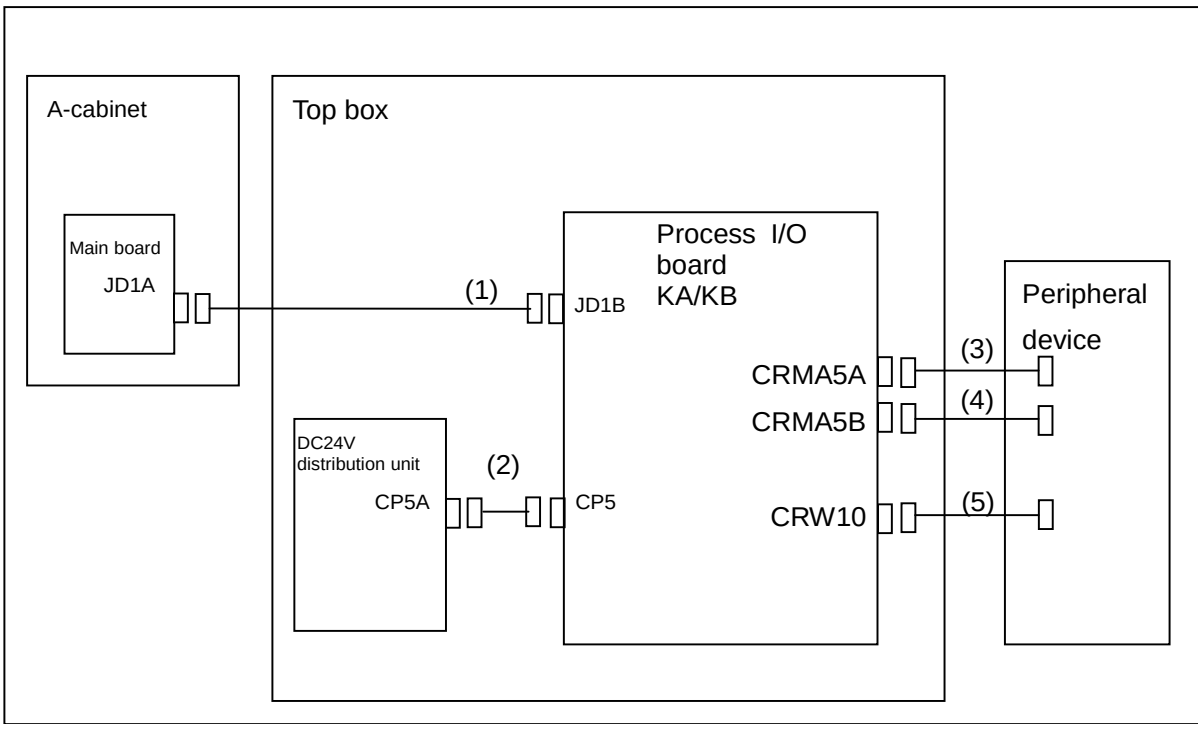

Fig.4.1.4(a) Block diagram of the process I/O board KA/KB

Integrated type

Number	Name	Drawing number	Remarks
(1)	I/O Link cable	A05B-2601-H180	
(2)	Process I/O cable		
(3) (4)	Peripheral device connection cable	A05B-2601-J230	Connection length of 10 m (one)
		A05B-2601-J231	Connection length of 20 m (one)
		A05B-2601-J232	Connection length of 30 m (one)
(5)	Welding machine connection cable (For process I/O board KA, KB) (FANUC interface/elbow type)	A05B-2601-J235	Connection length of 3 m (one), CRW10
		A05B-2601-J236	Connection length of 7 m (one), CRW10
		A05B-2601-J237	Connection length of 14 m (one), CRW10

4.1.5 When I/O Unit-MODEL A is Used

4.1.5.1 In case of A-cabinet

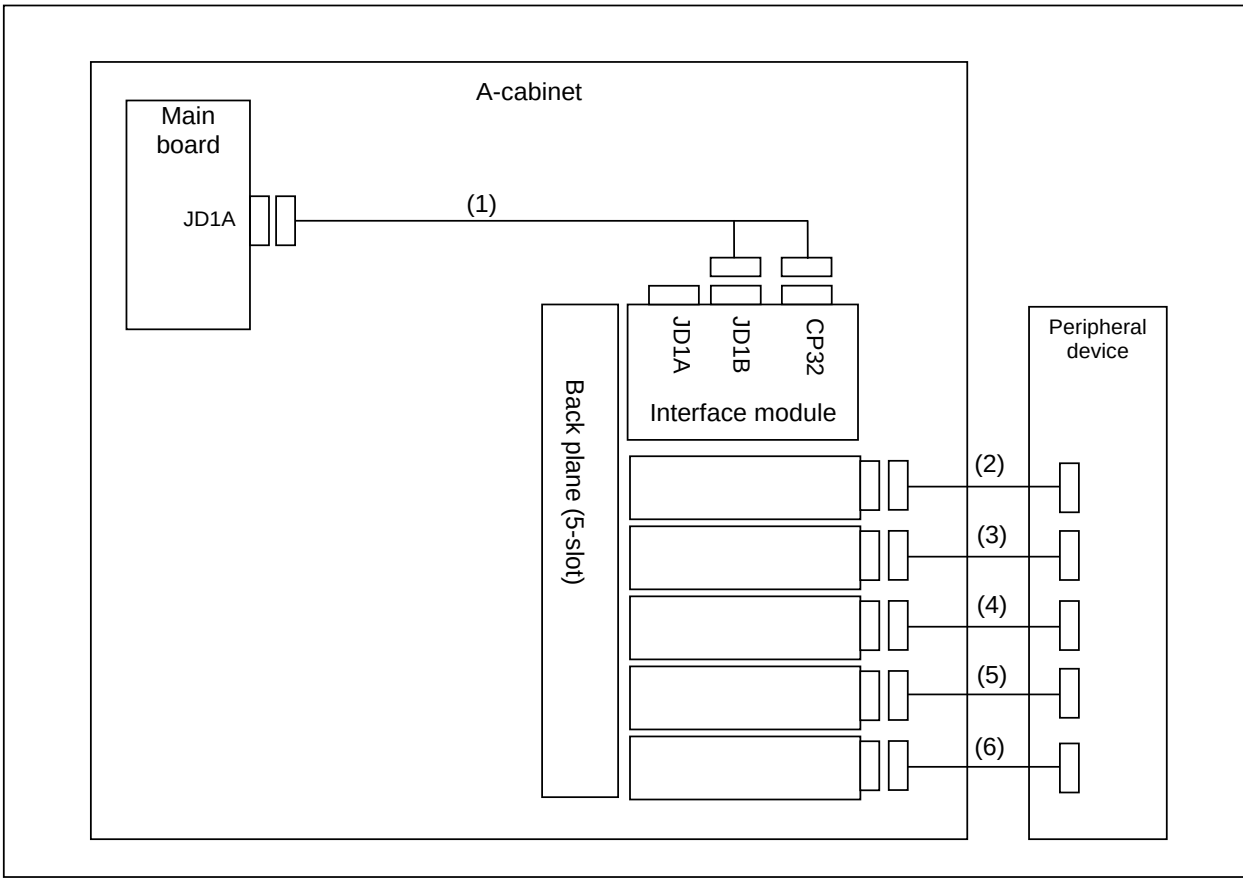

Fig.4.1.5.1(a) Block diagram of I/O Unit-MODEL A (In case of A-cabinet)

Number	Name	Drawing number	Remarks
(1)	I/O Link cable	-	Included in (A05B-2601-J130)
(2)-(6)	Peripheral device cable	-	Must be supplied by the customer.

4.1.5.2 In case of B-cabinet

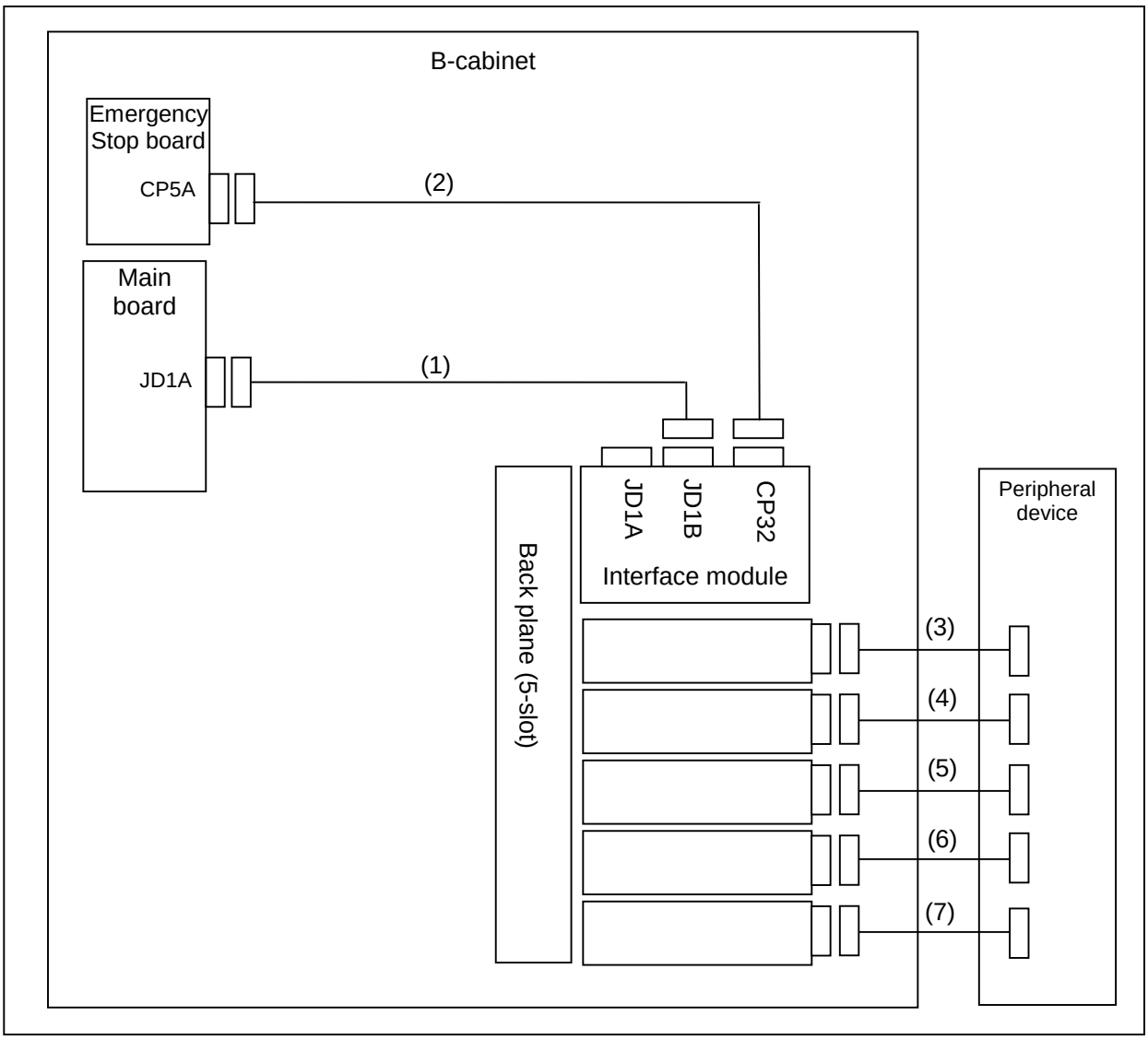

Fig.4.1.5.2(a) Block diagram of I/O Unit-MODEL A (In case of B-cabinet)

Number	Name	Drawing number	Remarks
(1)	I/O Link cable	-	Included in (A05B-2603-J130)
(2)	Power supply cable	-	Included in (A05B-2603-J130)
(3)-(7)	Peripheral device cable	-	Must be supplied by the customer.

4.1.6 When Two or More Process I/O Board and I/O Unit-MODEL A are Used

4.1.6.1 In case of B-cabinet

When several units of the process I/O PCB, I/O Unit-A are used, connect them as shown below.

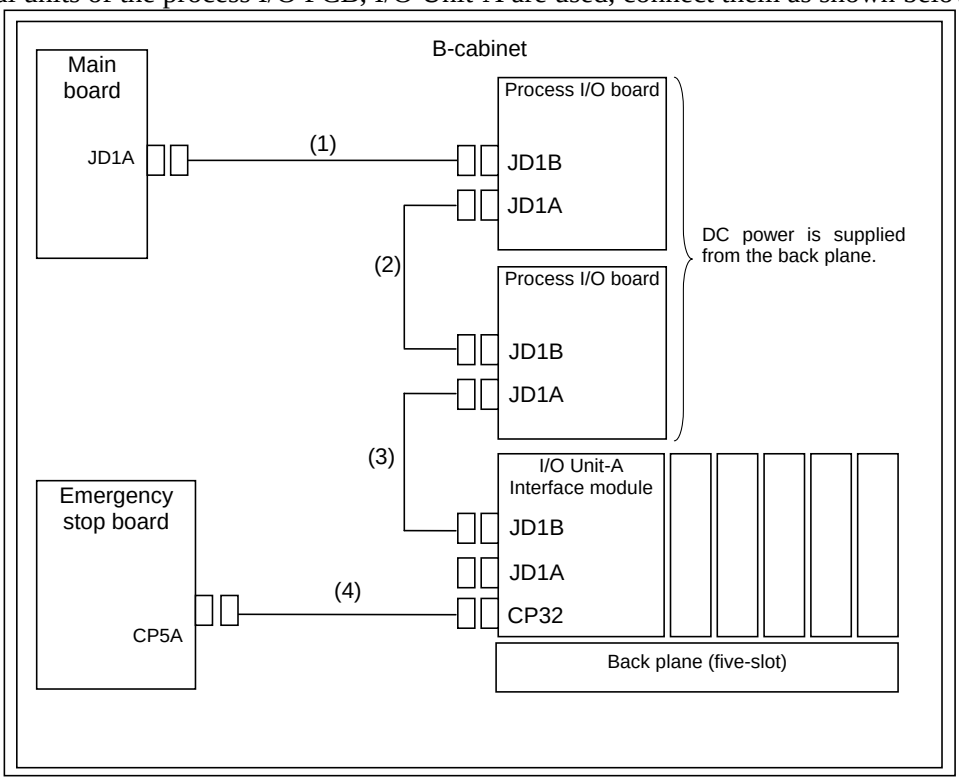

Fig.4.1.6.1(a) Block diagram of two or more process I/O printed circuit boards and I/O unit-MODEL A (In case of B-cabinet)

Number	Name	Drawing number	Remarks
(1)	I/O Link cable	A05B-2603-J170	Between main board and process I/O
(2)	I/O Link cable	A05B-2603-J171	Between process I/O and process I/O
(3)	I/O Link cable	-	Included in (A05B-2603-J130)
(4)	Power supply cable	-	Included in (A05B-2603-J130)

4.2 PROCESS I/O BOARD SIGNALS

There are 18 exclusive data inputs (DI) and 20 exclusive data outputs (DO) for a process I/O board.
These signals are allocated to the process I/O board connected first when two or more printed boards are combined. (General signals DI/DO are allocated to the second and the following process I/O boards.)
The common voltage of the DI signals input to pins 1 to 4 of connector CRMA5A is clamped +24 V (common) in each process I/O board.
Table 4.2(a)(b) shows signals of a process I/O board.

Table 4.2(a) Process I/O board signals (DI signal, except process I/O board MA)

Connector number	Signal name	Standard I/O asg.			Remarks
		UOP auto asg.: Full	**UOP auto asg.: Simple**	**UOP auto asg.: None Full (Slave) Full (CRMA16) Simple (Slave) Simple(CRMA16)**	
CRMA5A- 1	*IMSTP	UI[1] *IMSTP	UI[2] *HOLD	DI[1]	Clamped＋24V common
CRMA5A- 2	*HOLD	UI[2] *HOLD	UI[5] RESET	DI[2]	
CRMA5A- 3	*SFSD	UI[3] *SFSD	UI[6] START	DI[3]	
CRMA5A- 4	CSTOPI	UI[4] CSTOPI	UI[8] ENBL	DI[4]	
CRMA5A- 5	FAULT RESET	UI[5] FAULT RESET	UI[9] PNS1	DI[5]	
CRMA5A- 6	START	UI[6] START	UI[10] PNS2	DI[6]	
CRMA5A- 7	HOME	UI[7] HOME	UI[11] PNS3	DI[7]	
CRMA5A- 8	ENBL	UI[8] ENBL	UI[12] PNS4	DI[8]	
CRMA5A- 9	RSR1	UI[9] RSR1/PNS1/STYLE1	DI[1]	DI[9]	
	PNS1				Option
CRMA5A-10	RSR2	UI[10] RSR2/PNS2/STYLE2	DI[2]	DI[10]	
	PNS2				Option
CRMA5A-11	RSR3	UI[11] RSR3/PNS3/STYLE3	DI[3]	DI[11]	
	PNS3				Option
CRMA5A-12	RSR4	UI[12] RSR4/PNS4/STYLE4	DI[4]	DI[12]	
	PNS4				Option
CRMA5A-13	RSR5	UI[13] RSR5/PNS5/STYLE5	DI[5]	DI[13]	
	PNS5				Option
CRMA5A-14	RSR6	UI[14] RSR6/PNS6/STYLE6	DI[6]	DI[14]	
	PNS6				Option
CRMA5A-15	RSR7	UI[15] RSR7/PNS7/STYLE7	DI[7]	DI[15]	
	PNS7				Option
CRMA5A-16	RSR8	UI[16] RSR8/PNS8/STYLE8	DI[8]	DI[16]	
	PNS8				Option
CRMA5A-29	PNSTROBE	UI[17] PNSTROBE	DI[9]	DI[17]	
CRMA5A-30	PROD START	UI[18] PROD START	DI[10]	DI[18]	
CRMA5A-31	DI01	DI[1]	DI[11]	DI[19]	General signal
CRMA5A-32	DI02	DI[2]	DI[12]	DI[20]	
CRMA5B- 1	DI03	DI[3]	DI[13]	DI[21]	
CRMA5B- 2	DI04	DI[4]	DI[14]	DI[22]	
CRMA5B- 3	DI05	DI[5]	DI[15]	DI[23]	
CRMA5B- 4	DI06	DI[6]	DI[16]	DI[24]	
CRMA5B- 5	DI07	DI[7]	DI[17]	DI[25]	
CRMA5B- 6	DI08	DI[8]	DI[18]	DI[26]	
CRMA5B- 7	DI09	DI[9]	DI[19]	DI[27]	
CRMA5B- 8	DI10	DI[10]	DI[20]	DI[28]	
CRMA5B- 9	DI11	DI[11]	DI[21]	DI[29]	
CRMA5B-10	DI12	DI[12]	DI[22]	DI[30]	
CRMA5B-11	DI13	DI[13]	DI[23]	DI[31]	
CRMA5B-12	DI14	DI[14]	DI[24]	DI[32]	
CRMA5B-13	DI15	DI[15]	DI[25]	DI[33]	
CRMA5B-14	DI16	DI[16]	DI[26]	DI[34]	
CRMA5B-15	DI17	DI[17]	DI[27]	DI[35]	
CRMA5B-16	DI18	DI[18]	DI[28]	DI[36]	
CRMA5B-29	DI19	DI[19]	DI[29]	DI[37]	
CRMA5B-30	DI20	DI[20]	DI[30]	DI[38]	
CRMA5B-31	DI21	DI[21]	DI[31]	DI[39]	
CRMA5B-32	DI22	DI[22]	DI[32]	DI[40]	

Table 4.2(b) Process I/O board signals (DI signal, process I/O board MA)

Connector number	Signal name	Standard I/O asg.		Remarks
		UOP auto asg.: None Full Full (Slave) Full (CRMA16) Simple (Slave) Simple(CRMA16)	**UOP auto asg.: Simple**	
CRMA52A-2A	DI01	DI[1]	UI[2] *HOLD	General signal
CRMA52A-2B	DI02	DI[2]	UI[5] RESET	
CRMA52A-3A	DI03	DI[3]	UI[6] START	
CRMA52A-3B	DI04	DI[4]	UI[8] ENBL	
CRMA52A-4A	DI05	DI[5]	UI[9] PNS1	
CRMA52A-4B	DI06	DI[6]	UI[10] PNS2	
CRMA52A-5A	DI07	DI[7]	UI[11] PNS3	
CRMA52A-5B	DI08	DI[8]	UI[12] PNS4	
CRMA52A-6A	DI09	DI[9]	DI[1]	
CRMA52A-6B	DI10	DI[10]	DI[2]	
CRMA52B-2A	DI11	DI[11]	DI[3]	
CRMA52B-2B	DI12	DI[12]	DI[4]	
CRMA52B-3A	DI13	DI[13]	DI[5]	
CRMA52B-3B	DI14	DI[14]	DI[6]	
CRMA52B-4A	DI15	DI[15]	DI[7]	
CRMA52B-4B	DI16	DI[16]	DI[8]	
CRMA52B-5A	DI17	DI[17]	DI[9]	
CRMA52B-5B	DI18	DI[18]	DI[10]	
CRMA52B-6A	DI19	DI[19]	DI[11]	
CRMA52B-6B	DI20	DI[20]	DI[12]	

Table 4.2(c) Process I/O board signals (DO signal, except process I/O board MA)

Connector number	Signal name	Standard I/O asg.			Remarks
		UOP auto asg.: Full	**UOP auto asg.: Simple**	**UOP auto asg.: None** **Full (Slave)** **Full (CRMA16)** **Simple (Slave)** **Simple(CRMA16)**	
CRMA5A-33	CMDENBL	UO[1] CMDENBL	UO[1] CMDENBL	DO[1]	
CRMA5A-34	SYSRDY	UO[2] SYSRDY	UO[6] FAULT	DO[2]	
CRMA5A-35	PROGRUN	UO[3] PROGRUN	UO[9] BATALM	DO[3]	
CRMA5A-36	PAUSED	UO[4] PAUSED	UO[10] BUSY	DO[4]	
CRMA5A-38	HELD	UO[5] HELD	DO[1]	DO[5]	
CRMA5A-39	FAULT	UO[6] FAULT	DO[2]	DO[6]	
CRMA5A-40	ATPERCH	UO[7] ATPERCH	DO[3]	DO[7]	
CRMA5A-41	TPENBL	UO[8] TPENBL	DO[4]	DO[8]	
CRMA5A-43	BATALM	UO[9] BATALM	DO[5]	DO[9]	
CRMA5A-44	BUSY	UO[10] BUSY	DO[6]	DO[10]	
CRMA5A-45	ACK1	UO[11] ACK1/SNO1	DO[7]	DO[11]	
	SNO1				Option
CRMA5A-46	ACK2	UO[12] ACK2/SNO2	DO[8]	DO[12]	
	SNO2				Option
CRMA5A-19	ACK3	UO[13] ACK3/SNO3	DO[9]	DO[13]	
	SNO3				Option
CRMA5A-20	ACK4	UO[14] ACK4/SNO4	DO[10]	DO[14]	
	SNO4				Option
CRMA5A-21	ACK5	UO[15] ACK5/SNO5	DO[11]	DO[15]	
	SNO5				Option
CRMA5A-22	ACK6	UO[16] ACK6/SNO6	DO[12]	DO[16]	
	SNO6				Option
CRMA5A-24	ACK7	UO[17] ACK7/SNO7	DO[13]	DO[17]	
	SNO7				Option
CRMA5A-25	ACK8	UO[18] ACK8/SNO8	DO[14]	DO[18]	
	SNO8				Option
CRMA5A-26	SNACK	UO[19] SNACK	DO[15]	DO[19]	
CRMA5A-27	RESERVED	UO[20] Reserve	DO[16]	DO[20]	
CRMA5B-33	DO01	DO[1]	DO[17]	DO[21]	General signal
CRMA5B-34	DO02	DO[2]	DO[18]	DO[22]	
CRMA5B-35	DO03	DO[3]	DO[19]	DO[23]	
CRMA5B-36	DO04	DO[4]	DO[20]	DO[24]	
CRMA5B-38	DO05	DO[5]	DO[21]	DO[25]	
CRMA5B-39	DO06	DO[6]	DO[22]	DO[26]	
CRMA5B-40	DO07	DO[7]	DO[23]	DO[27]	
CRMA5B-41	DO08	DO[8]	DO[24]	DO[28]	
CRMA5B-43	DO09	DO[9]	DO[25]	DO[29]	
CRMA5B-44	DO10	DO[10]	DO[26]	DO[30]	
CRMA5B-45	DO11	DO[11]	DO[27]	DO[31]	
CRMA5B-46	DO12	DO[12]	DO[28]	DO[32]	
CRMA5B-19	DO13	DO[13]	DO[29]	DO[33]	
CRMA5B-20	DO14	DO[14]	DO[30]	DO[34]	
CRMA5B-21	DO15	DO[15]	DO[31]	DO[35]	
CRMA5B-22	DO16	DO[16]	DO[32]	DO[36]	
CRMA5B-24	DO17	DO[17]	DO[33]	DO[37]	
CRMA5B-25	DO18	DO[18]	DO[34]	DO[38]	
CRMA5B-26	DO19	DO[19]	DO[35]	DO[39]	
CRMA5B-27	DO20	DO[20]	DO[36]	DO[40]	

Table 4.2(d) Process I/O board signals (DO signal, process I/O board MA)

Connector number	Signal name	Standard I/O asg.		Remarks
		UOP auto asg.: None Full Full (Slave) Full (CRMA16) Simple (Slave) Simple(CRMA16)	**UOP auto asg.: Simple**	
CRMA52A-8A	DO01	DO01	UO[1] CMDENBL	General signal
CRMA52A-8B	DO02	DO02	UO[6] FAULT	
CRMA52A-9A	DO03	DO03	UO[9] BATALM	
CRMA52A-9B	DO04	DO04	UO[10] BUSY	
CRMA52A-10A	DO05	DO05	DO[1]	
CRMA52A-10B	DO06	DO06	DO[2]	
CRMA52A-11A	DO07	DO07	DO[3]	
CRMA52A-11B	DO08	DO08	DO[4]	
CRMA52B-8A	DO09	DO09	DO[5]	
CRMA52B-8B	DO10	DO10	DO[6]	
CRMA52B-9A	DO11	DO11	DO[7]	
CRMA52B-9B	DO12	DO12	DO[8]	
CRMA52B-10A	DO13	DO13	DO[9]	
CRMA52B-10B	DO14	DO14	DO[10]	
CRMA52B-11A	DO15	DO15	DO[11]	
CRMA52B-11B	DO16	DO16	DO[12]	

Signal name (DI signal)	Description	Signal name (DO signal)	Description
*IMSTP	Immediate stop	CMDENBL	During automatic operation
*HOLD	Temporary stop	SYSRDY	Preparation completed
*SFSD	Safe speed	PROGRUN	Program running
CSTOPI	Cycle stop	PAUSED	Program being interrupted
FAULT RESET	External reset	HELD	During temporary stop
START	Start	FAULT	Alarm
HOME	Return to home position	ATPERCH	Home position
ENBL	Operation enabled	TPENBL	Teach pendant enabled
RSR1~RSR8	Robot service request	BATALM	Battery voltage drop
PNS1~PNS8	Program number selection	BUSY	During operation
PNSTROBE	PNS strobe	ACK1~ACK8	Robot service request acceptance
PROD START	Start of automatic operation	SNO1~SNO8	Selected program number
DI01~DI22	Peripheral device status	SNACK	Response signal to PNS
		DO01~DO20	Peripheral device control signal

4.3 INTERFACE FOR PERIPHERAL DEVICES

4.3.1 Peripheral Device and Controller Connection (Source Type DO)

Controller

Process I/O board JA,JB, KA, KB

Peripheral device control interface A1 (Source type DO)

CRMA5A

01	*IMSTP			33	CMDENBL
02	*HOLD	19	ACK3/SNO3	34	SYSRDY
03	*SFSPD	20	ACK4/SNO4	35	PROGRUN
04	CSTOPI	21	ACK5/SNO5	36	PAUSED
05	FAULT RESET	22	ACK6/SNO6	37	DOSRC1
06	START	23	DOSRC1	38	HELD
07	HOME	24	ACK7/SNO7	39	FAULT
08	ENBL	25	ACK8/SNO8	40	ATPERCH
09	RSR1/PNS1	26	SNACK	41	TPENBL
10	RSR2/PNS2	27	RESERVED	42	DOSRC1
11	RSR3/PNS3	28	DOSRC1	43	BATALM
12	RSR4/PNS4	29	PNSTROBE	44	BUSY
13	RSR5/PNS5	30	PROD START	45	ACK1/SNO1
14	RSR6/PNS6	31	DI01	46	ACK2/SNO2
15	RSR7/PNS7	32	DI02	47	DOSRC1
16	RSR8/PNS8			48	
17	0V			49	+24E
18	0V			50	+24E

Peripheral device A1

Peripheral device control interface A2 (Source type DO)

CRMA5B

01	DI03			33	DO01
02	DI04	19	DO13	34	DO02
03	DI05	20	DO14	35	DO03
04	DI06	21	DO15	36	DO04
05	DI07	22	DO16	37	DOSRC1
06	DI08	23	DOSRC1	38	DO05
07	DI09	24	DO17	39	DO06
08	DI10	25	DO18	40	DO07
09	DI11	26	DO19	41	DO08
10	DI12	27	DO20	42	DOSRC1
11	DI13	28	DOSRC1	43	DO09
12	DI14	29	DI19	44	DO10
13	DI15	30	DI20	45	DO11
14	DI16	31	DI21	46	DO12
15	DI17	32	DI22	47	DOSRC1
16	DI18			48	
17	0V			49	+24E
18	0V			50	+24E

Peripheral device A2

Terminal block

TBSRC1

1	DOSRC1
2	0V

NOTE

1 The peripheral device connection cables are optional.
2 The DOSRC1 pins of the CRMA5A and CRMA5B are pins for supplying power to drivers. (None of these pins can be left open.)
3 When the level of the voltage applied to the load is insufficient for a cause such as a too long peripheral device connection cable, supply power from the TBSRC1 terminal block.

Controller

Peripheral device control interface A3
(Source type DO)

CRMA5C

01	DI23			33	DO21
02	DI24	19	DO33	34	DO22
03	DI25	20	DO34	35	DO23
04	DI26	21	DO35	36	DO24
05	DI27	22	DO36	37	DOSRC2
06	DI28	23	DOSRC2	38	DO25
07	DI29	24	DO37	39	DO26
08	DI30	25	DO38	40	DO27
09	DI31	26	DO39	41	DO28
10	DI32	27	DO40	42	DOSRC2
11	DI33	28	DOSRC2	43	DO29
12	DI34	29	DI39	44	DO30
13	DI35	30	DI40	45	DO31
14	DI36	31	DI41	46	DO32
15	DI37	32	DI42	47	DOSRC2
16	DI38			48	
17	0V			49	+24E
18	0V			50	+24E

Peripheral device control interface A4
(Source type DO)

CRMA5D

01	DI43			33	DO41
02	DI44	19	DO53	34	DO42
03	DI45	20	DO54	35	DO43
04	DI46	21	DO55	36	DO44
05	DI47	22	DO56	37	DOSRC2
06	DI48	23	DOSRC2	38	DO45
07	DI49	24	DO57	39	DO46
08	DI50	25	DO58	40	DO47
09	DI51	26	DO59	41	DO48
10	DI52	27	DO60	42	DOSRC2
11	DI53	28	DOSRC2	43	DO49
12	DI54	29	DI59	44	DO50
13	DI55	30	DI60	45	DO51
14	DI56	31	DI61	46	DO52
15	DI57	32	DI62	47	DOSRC2
16	DI58			48	
17	0V			49	+24E
18	0V			50	+24E

Terminal block

TBSRC2

1	DOSRC2
2	0V

Process I/O board JA

Peripheral device A3

Peripheral device A4

NOTE

1 The peripheral device connection cables are optional.
2 The DOSRC2 pins of the CRMA5C and CRMA5D are pins for supplying power to drivers. (None of these pins can be left open.)
3 When the level of the voltage applied to the load is insufficient for a cause such as a too long peripheral device connection cable, supply power from the TBSRC2 terminal block.

Controller

Process I/O board JA

Peripheral device control interface B1

(Source type DO)

CRMA6A

01	DI63	08	DO65	14	DO61
02	DI64	09	DO66	15	DO62
03	DI65	10	DO67	16	DO63
04	DI66	11	DO68	17	DO64
05	DI67	12	DOSRC3	18	DOSRC3
06	DI68	13	DI70	19	+24E
07	DI69			20	0V

Peripheral device B1

Peripheral device control interface B2

(Source type DO)

CRMA6B

01	DI71	08	DO73	14	DO69
02	DI72	09	DO74	15	DO70
03	DI73	10	DO75	16	DO71
04	DI74	11	DO76	17	DO72
05	DI75	12	DOSRC3	18	DOSRC3
06	DI76	13	DI78	19	+24E
07	DI77			20	0V

Peripheral device B2

Terminal block

TBSRC3

1	DOSRC3
2	0V

NOTE

1 The peripheral device connection cables are optional.
2 The DOSRC3 pins of the CRMA6A and CRMA6B are pins for supplying power to drivers. (None of these pins can be left open.)
3 When the level of the voltage applied to the load is insufficient for a cause such as a too long peripheral device connection cable, supply power from the TBSRC3 terminal block.

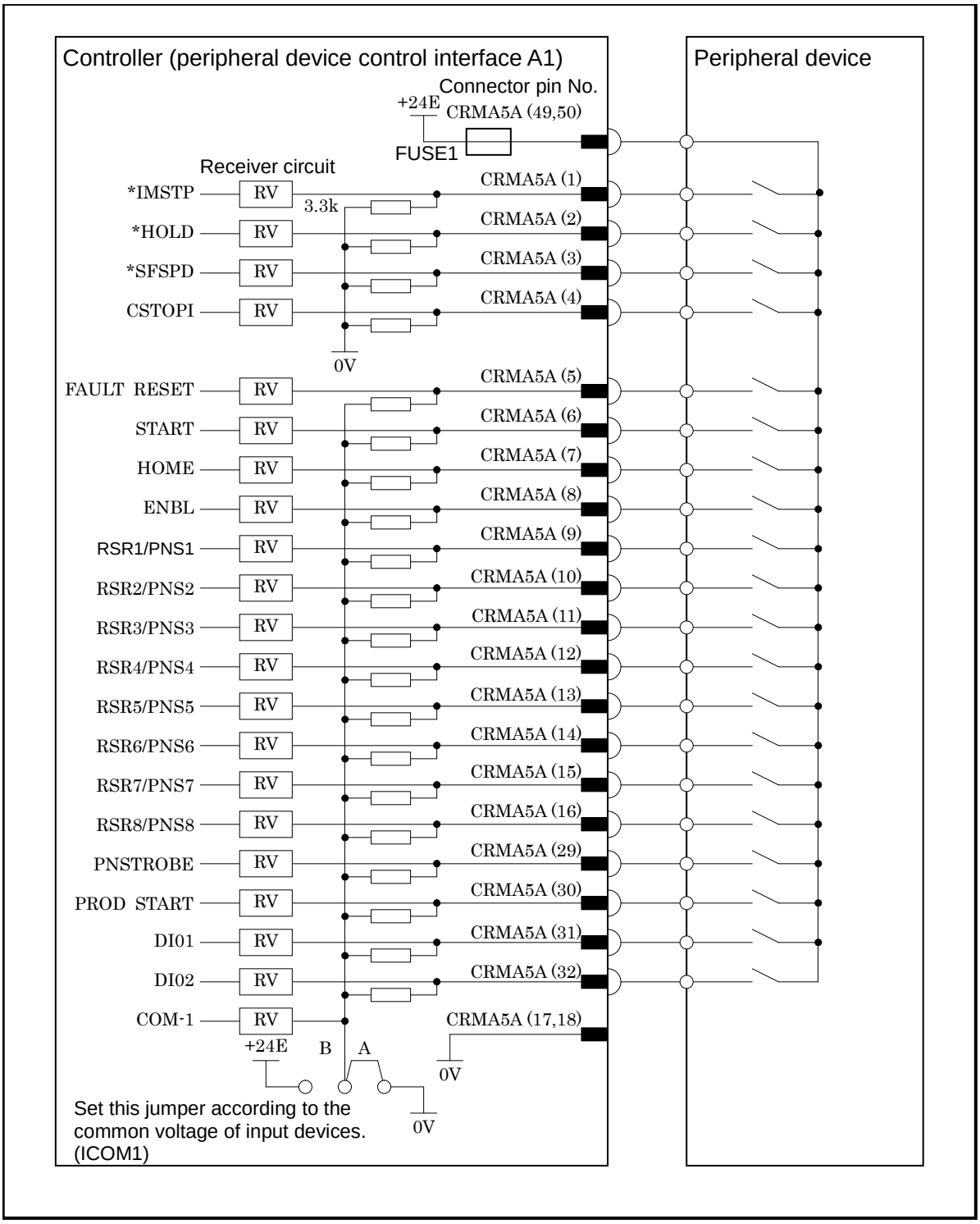

NOTE
In this diagram, common voltage of input devices is +24V.

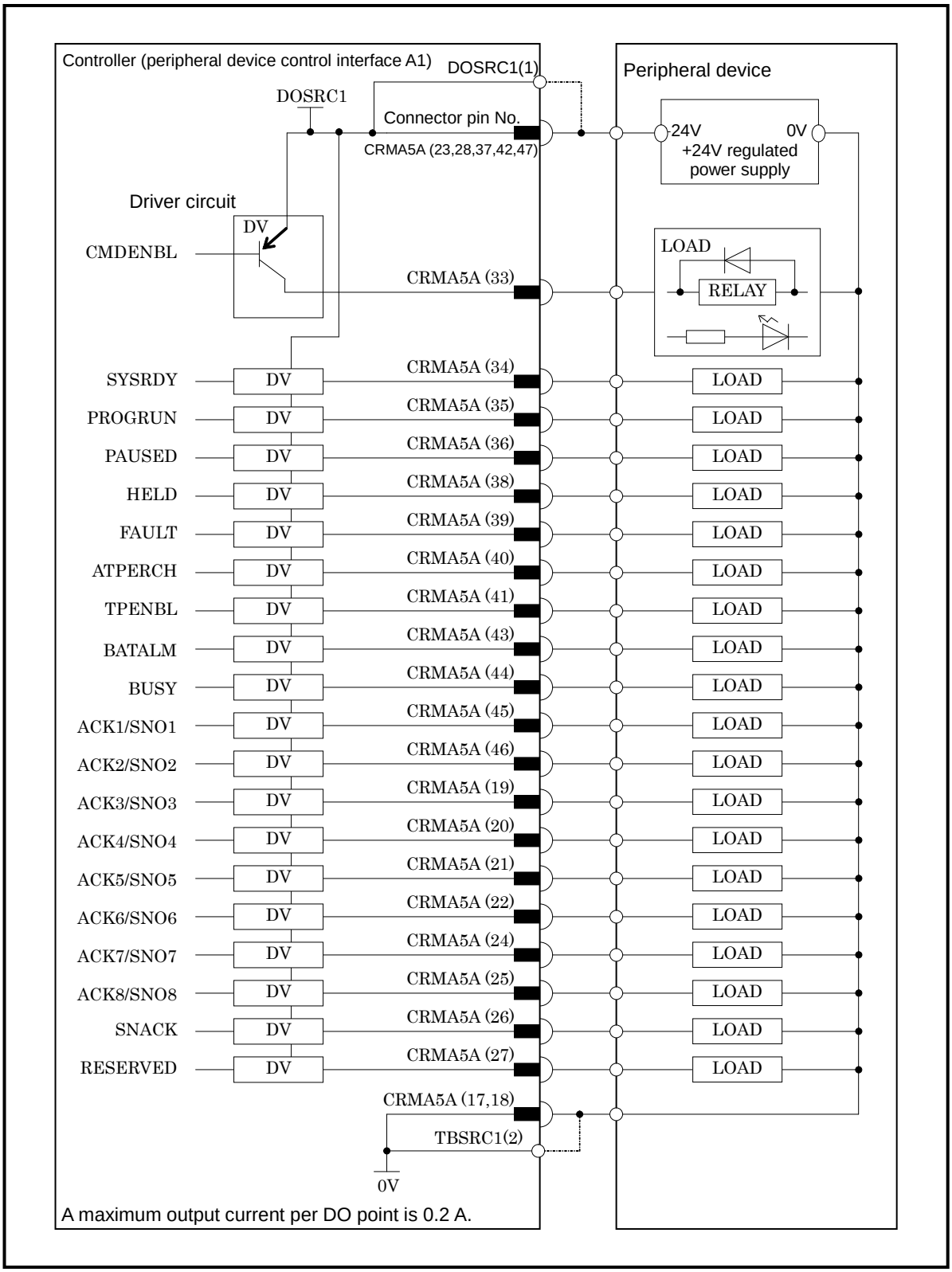
Controller (peripheral device control interface A1)
DOSRC1(1)
DOSRC1
Connector pin No.
CRMA5A (23,28,37,42,47)
Peripheral device
24V
0V
+24V regulated power supply
Driver circuit
DV
CMDENBL
CRMA5A (33)
LOAD
RELAY
SYSRDY
PROGRUN
PAUSED
HELD
FAULT
ATPERCH
TPENBL
BATALM
BUSY
ACK1/SNO1
ACK2/SNO2
ACK3/SNO3
ACK4/SNO4
ACK5/SNO5
ACK6/SNO6
ACK7/SNO7
ACK8/SNO8
SNACK
RESERVED
CRMA5A (34)
CRMA5A (35)
CRMA5A (36)
CRMA5A (38)
CRMA5A (39)
CRMA5A (40)
CRMA5A (41)
CRMA5A (43)
CRMA5A (44)
CRMA5A (45)
CRMA5A (46)
CRMA5A (19)
CRMA5A (20)
CRMA5A (21)
CRMA5A (22)
CRMA5A (24)
CRMA5A (25)
CRMA5A (26)
CRMA5A (27)
CRMA5A (17,18)
TBSRC1(2)
0V
A maximum output current per DO point is 0.2 A.

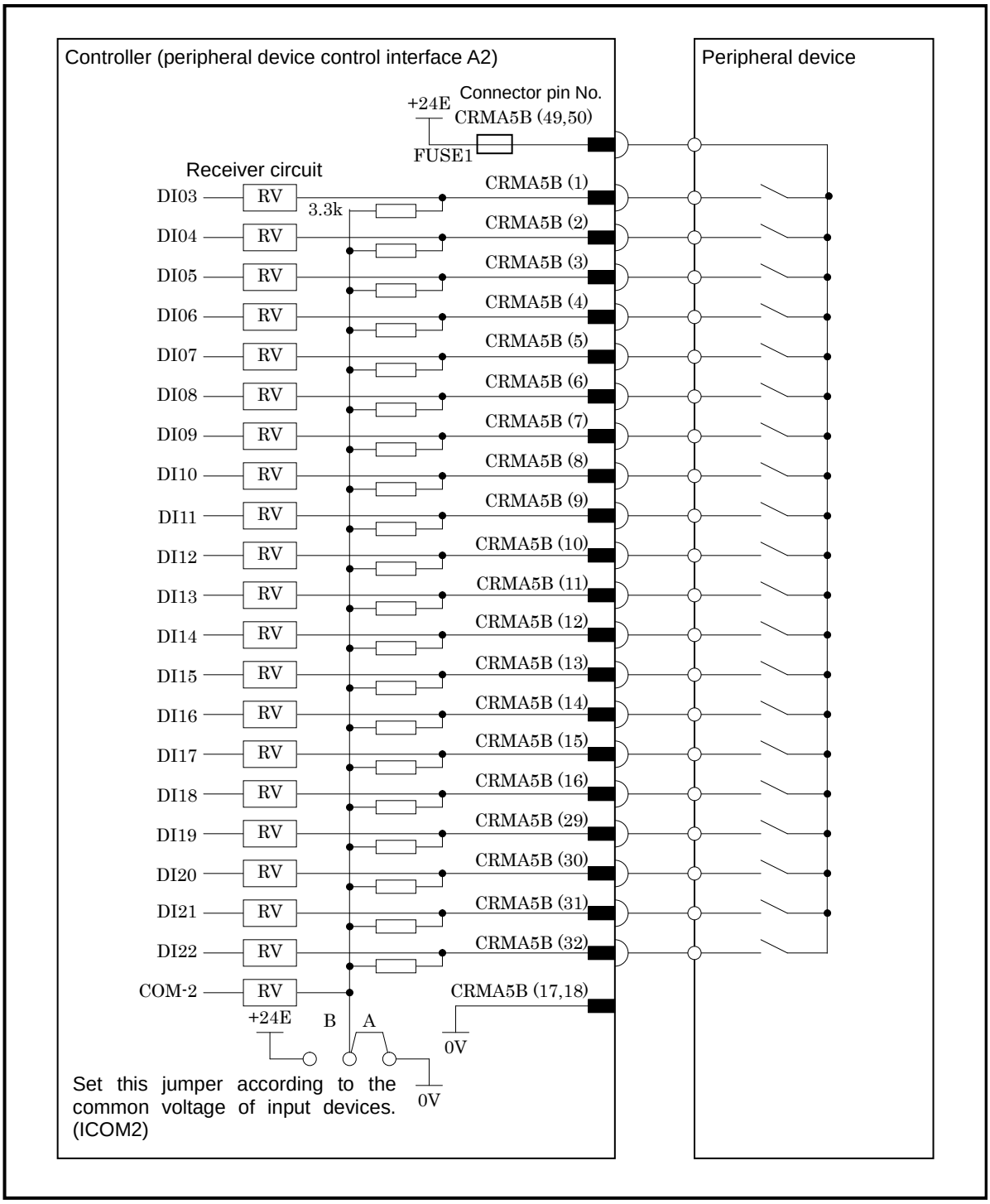

NOTE

In this diagram, common voltage of input devices is +24V.

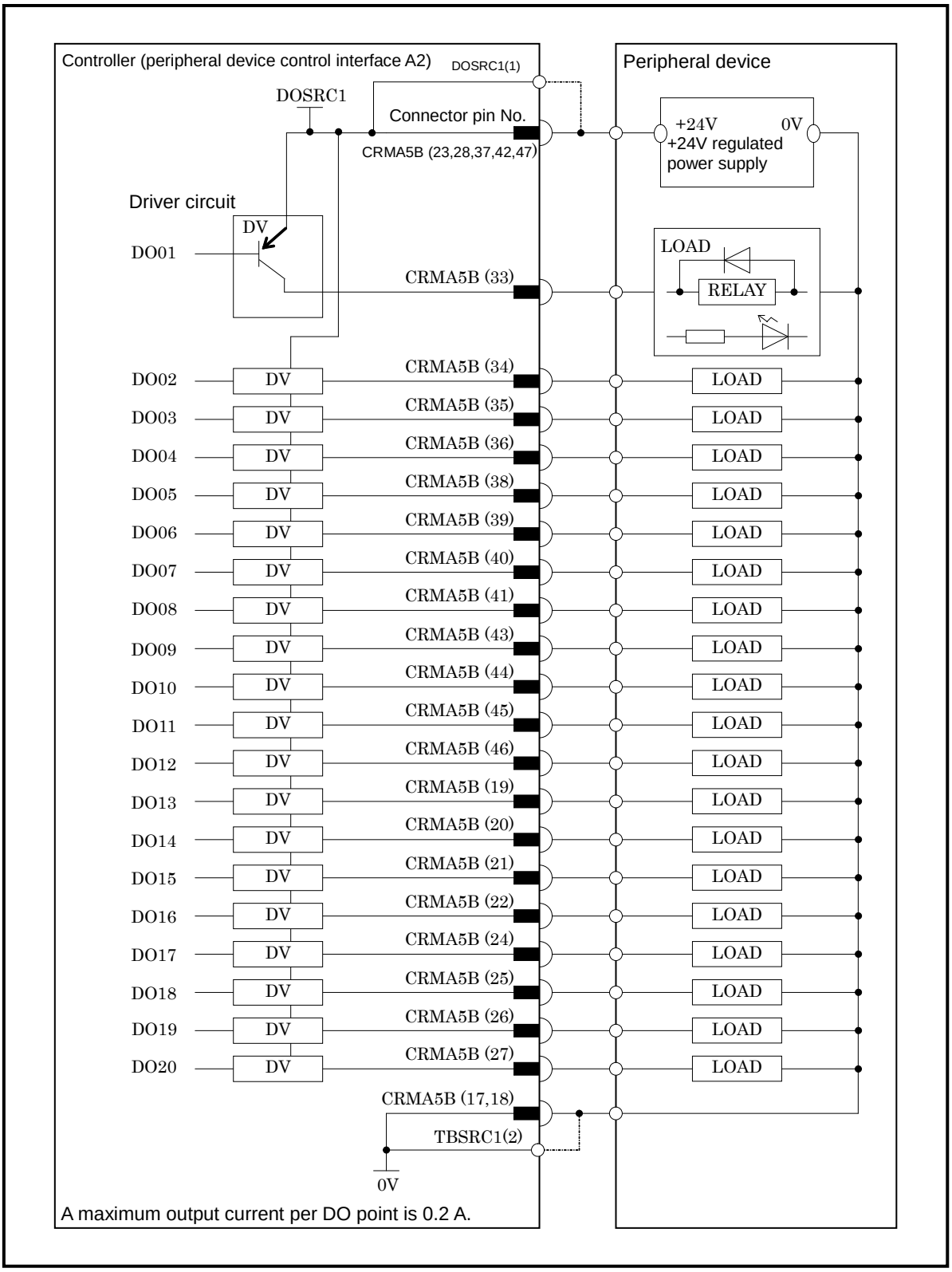
Controller (peripheral device control interface A2)
DOSRC1(1)
DOSRC1
Connector pin No.
CRMA5B (23,28,37,42,47)
Driver circuit
DV
DO01
CRMA5B (33)
DO02
CRMA5B (34)
DO03
CRMA5B (35)
DO04
CRMA5B (36)
DO05
CRMA5B (38)
DO06
CRMA5B (39)
DO07
CRMA5B (40)
DO08
CRMA5B (41)
DO09
CRMA5B (43)
DO10
CRMA5B (44)
DO11
CRMA5B (45)
DO12
CRMA5B (46)
DO13
CRMA5B (19)
DO14
CRMA5B (20)
DO15
CRMA5B (21)
DO16
CRMA5B (22)
DO17
CRMA5B (24)
DO18
CRMA5B (25)
DO19
CRMA5B (26)
DO20
CRMA5B (27)
CRMA5B (17,18)
TBSRC1(2)
0V
A maximum output current per DO point is 0.2 A.
Peripheral device
+24V
0V
+24V regulated power supply
LOAD
RELAY
LOAD

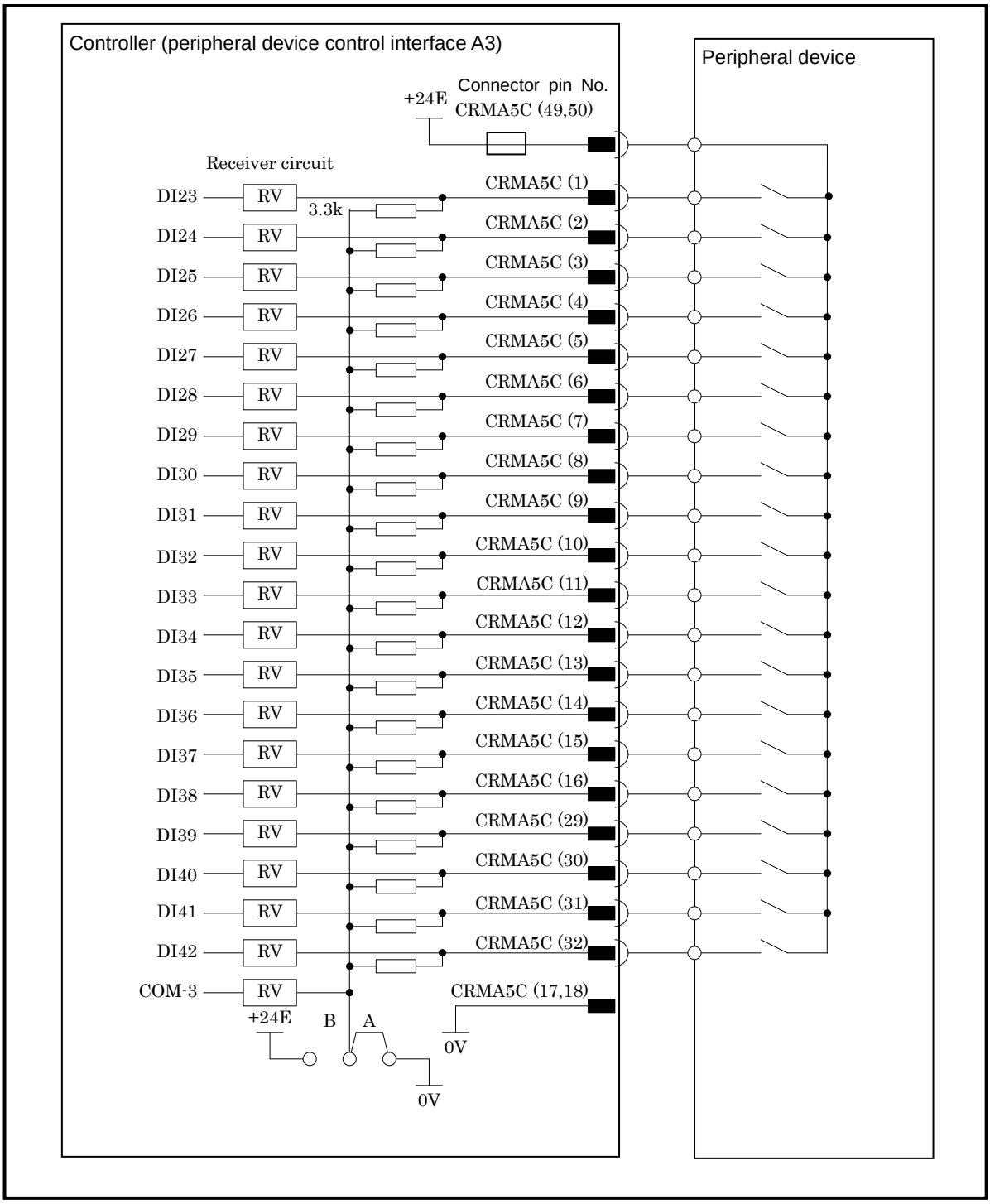

NOTE
In this diagram, common voltage of input devices is +24V.

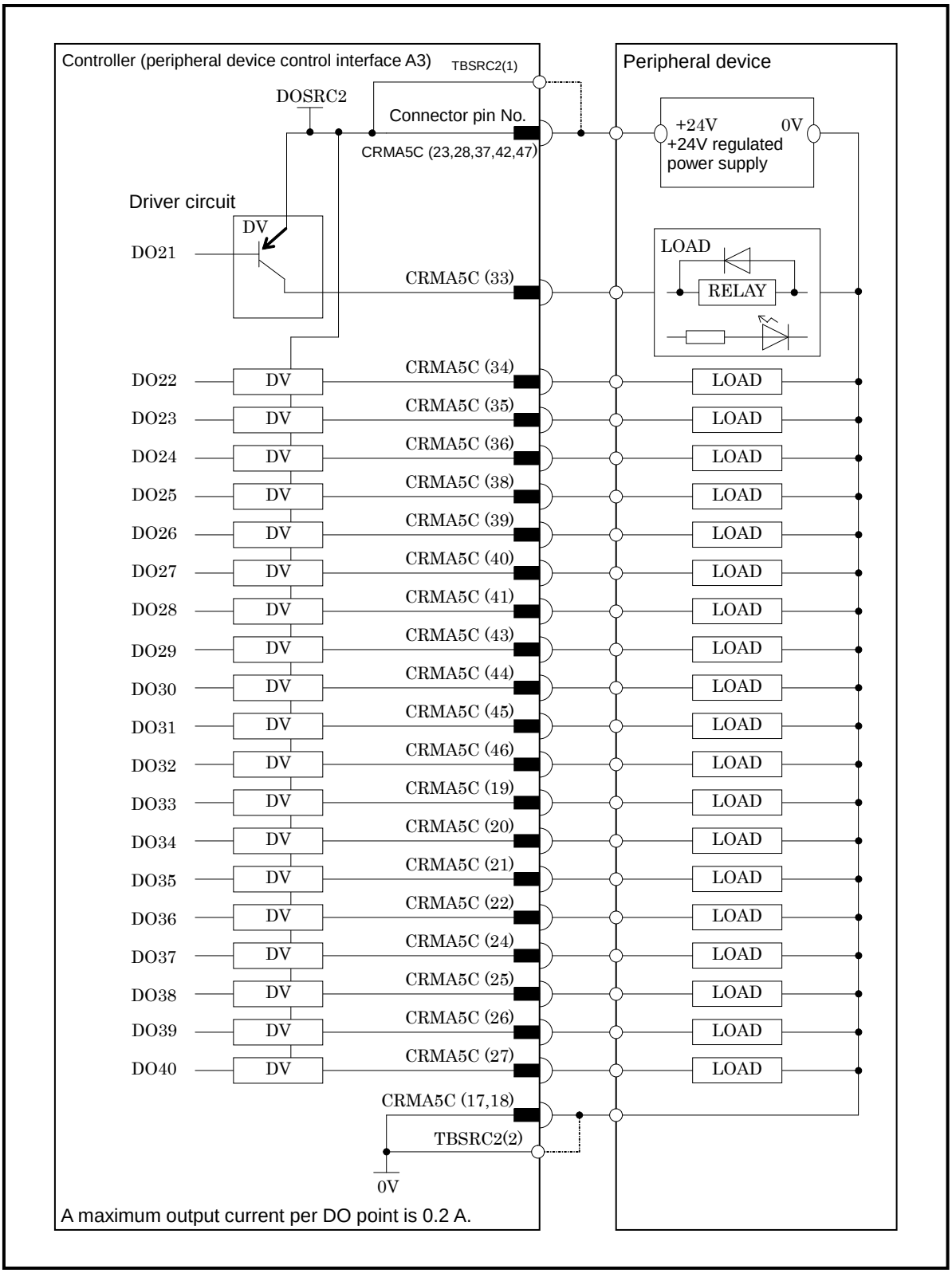
Controller (peripheral device control interface A3)
TBSRC2(1)
DOSRC2
Connector pin No.
CRMA5C (23,28,37,42,47)
Driver circuit
DV
DO21
CRMA5C (33)
DO22
CRMA5C (34)
DO23
CRMA5C (35)
DO24
CRMA5C (36)
DO25
CRMA5C (38)
DO26
CRMA5C (39)
DO27
CRMA5C (40)
DO28
CRMA5C (41)
DO29
CRMA5C (43)
DO30
CRMA5C (44)
DO31
CRMA5C (45)
DO32
CRMA5C (46)
DO33
CRMA5C (19)
DO34
CRMA5C (20)
DO35
CRMA5C (21)
DO36
CRMA5C (22)
DO37
CRMA5C (24)
DO38
CRMA5C (25)
DO39
CRMA5C (26)
DO40
CRMA5C (27)
CRMA5C (17,18)
TBSRC2(2)
0V
A maximum output current per DO point is 0.2 A.
Peripheral device
+24V
0V
+24V regulated power supply
LOAD
RELAY

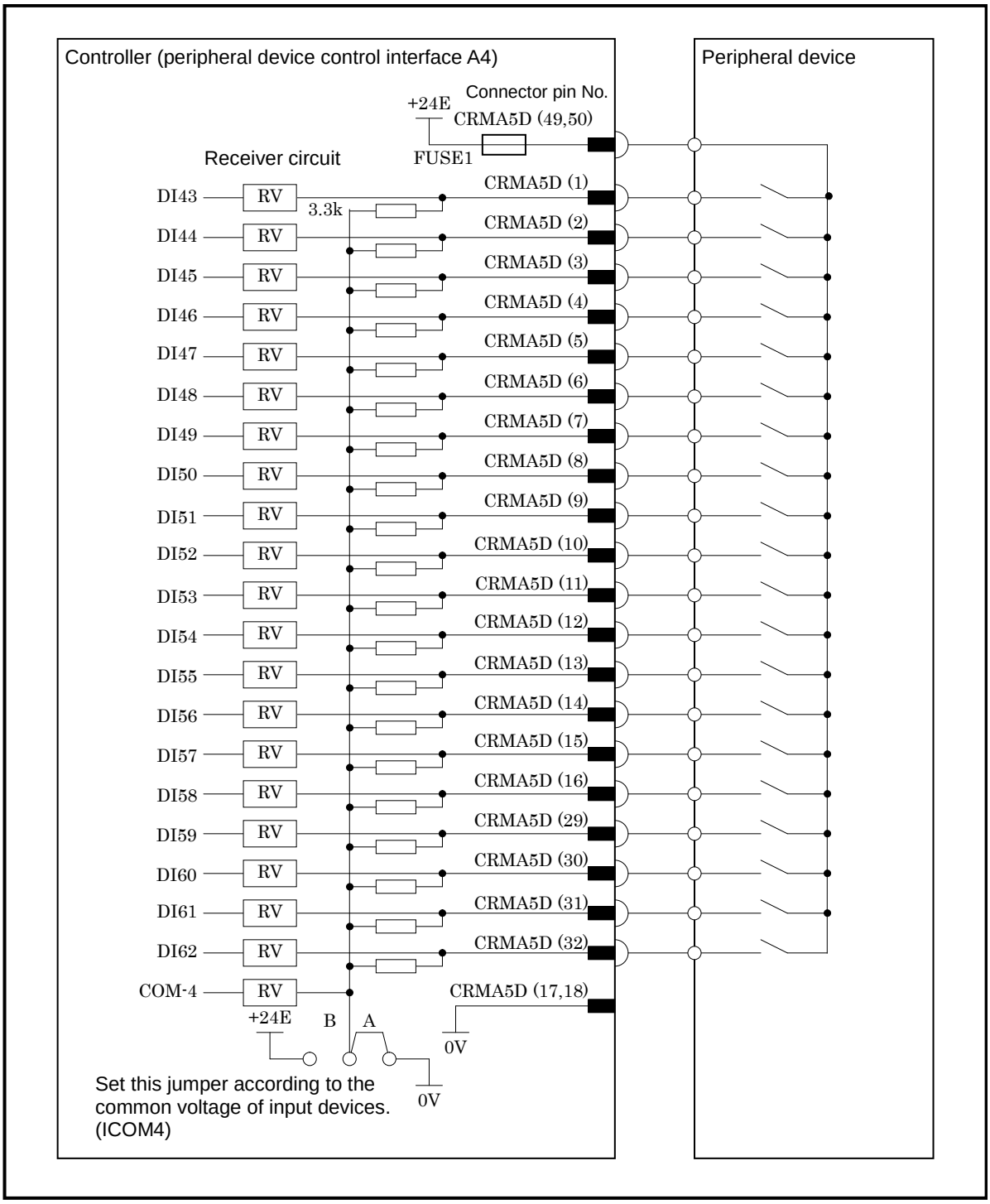

NOTE

In this diagram, common voltage of input devices is +24V.

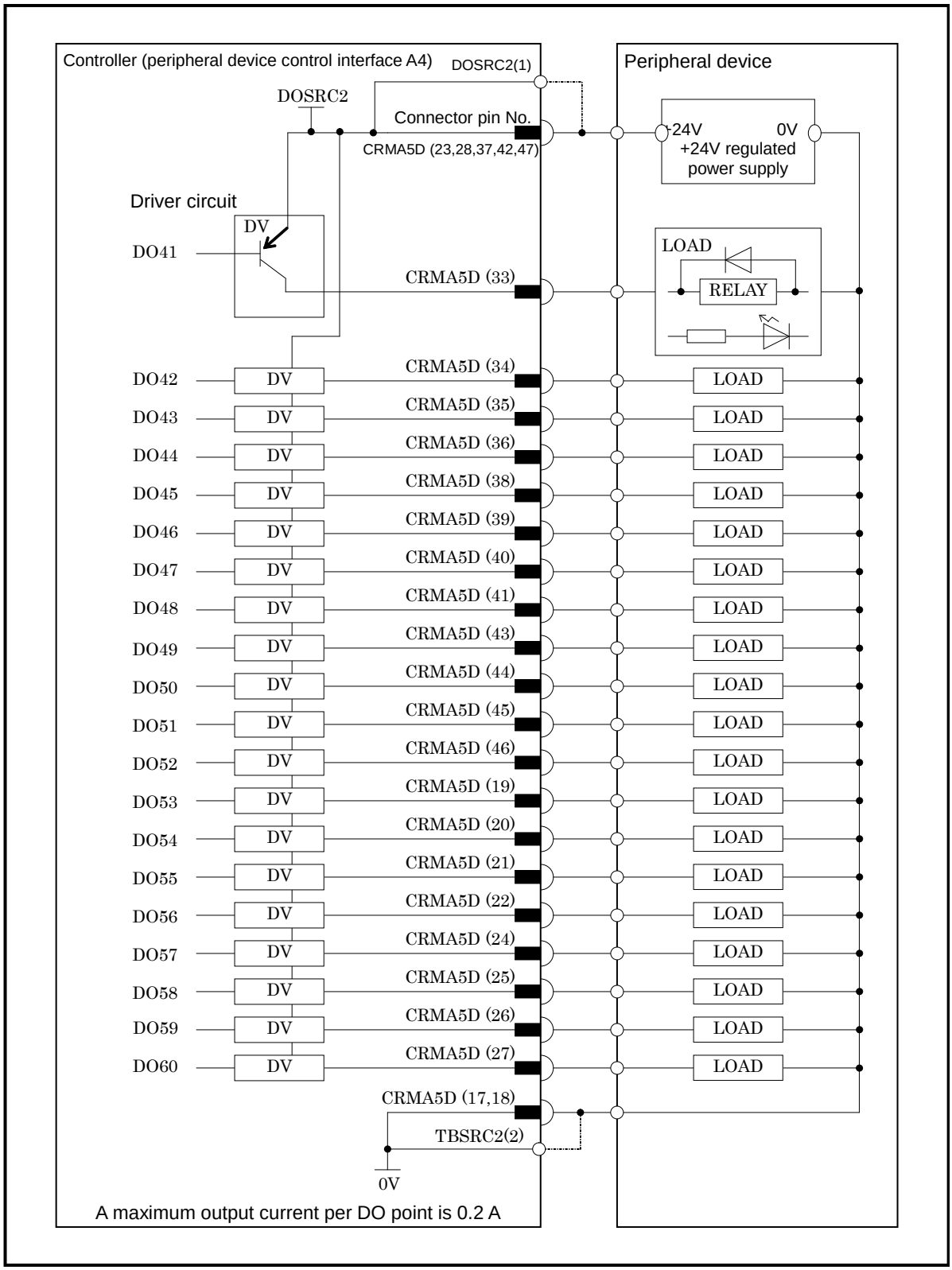
Controller (peripheral device control interface A4)
DOSRC2(1)
Peripheral device
DOSRC2
Connector pin No.
CRMA5D (23,28,37,42,47)
24V
0V
+24V regulated power supply
Driver circuit
DV
DO41
LOAD
RELAY
CRMA5D (33)
DO42
CRMA5D (34)
DO43
CRMA5D (35)
DO44
CRMA5D (36)
DO45
CRMA5D (38)
DO46
CRMA5D (39)
DO47
CRMA5D (40)
DO48
CRMA5D (41)
DO49
CRMA5D (43)
DO50
CRMA5D (44)
DO51
CRMA5D (45)
DO52
CRMA5D (46)
DO53
CRMA5D (19)
DO54
CRMA5D (20)
DO55
CRMA5D (21)
DO56
CRMA5D (22)
DO57
CRMA5D (24)
DO58
CRMA5D (25)
DO59
CRMA5D (26)
DO60
CRMA5D (27)
CRMA5D (17,18)
TBSRC2(2)
0V
A maximum output current per DO point is 0.2 A

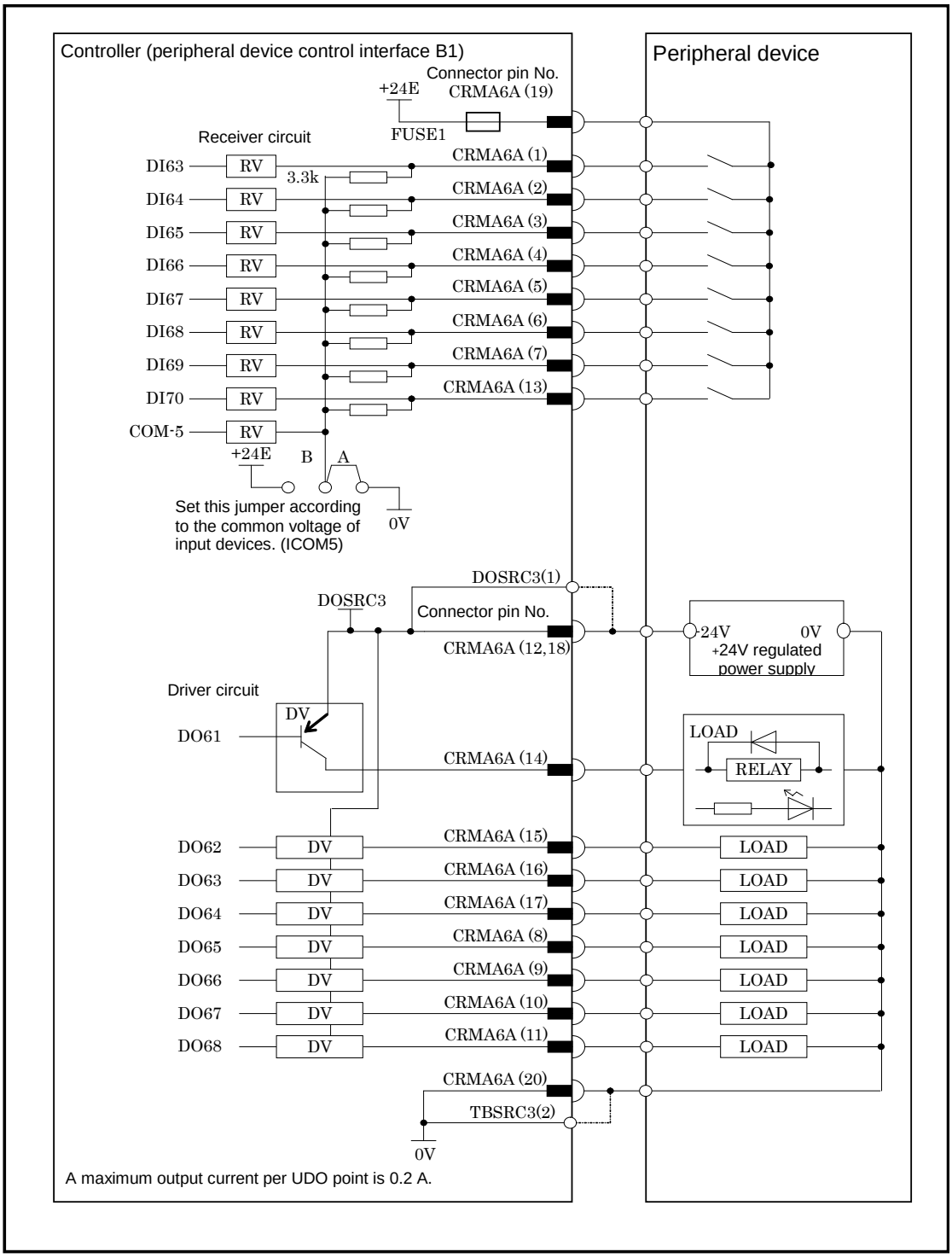

NOTE

In this diagram, common voltage of input devices is +24V.

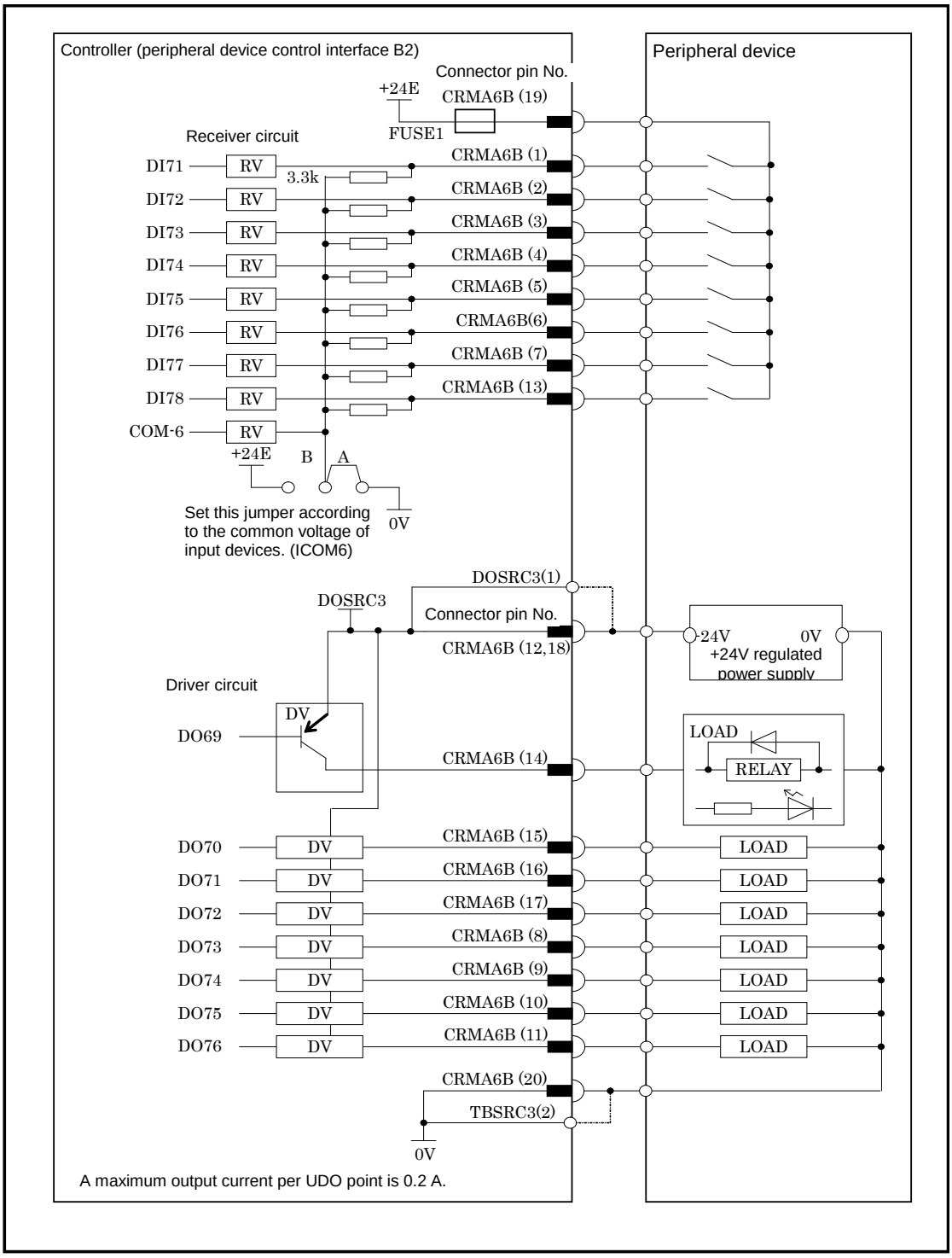

NOTE

In this diagram, common voltage of input devices is +24V.

4.3.2 Connection between the Process I/O Board MA and Peripheral Devices

Controller

Peripheral device control interface B1 (source type DO)

CRMA52A

	A	B
01	24F	24F
02	DI01	DI02
03	DI03	DI04
04	DI05	DI06
05	DI07	DI08
06	DI09	DI10
07		
8	DO01	DO02
09	DO03	DO04
10	DO05	DO06
11	DO07	DO08
12		
13	0V	0V
14	0V	0V
15	DOSRC3	DOSRC3

Peripheral Device B1

Peripheral device control interface B2 (source type DO)

CRMA52B

	A	B
01	24F	24F
02	DI11	DI12
03	DI13	DI14
04	DI15	DI16
05	DI17	DI18
06	DI19	DI20
07		
08	DO09	DO10
09	DO11	DO12
10	DO13	DO14
11	DO15	DO16
12		
13	0V	0V
14	0V	0V
15	DOSRC3	DOSRC3

Peripheral Device B2

NOTE

1 The peripheral device connection cable is optional.
2 The DOSRC3 pin of CRMA52A and CRMA52B supply power to the drivers (connect all pins).

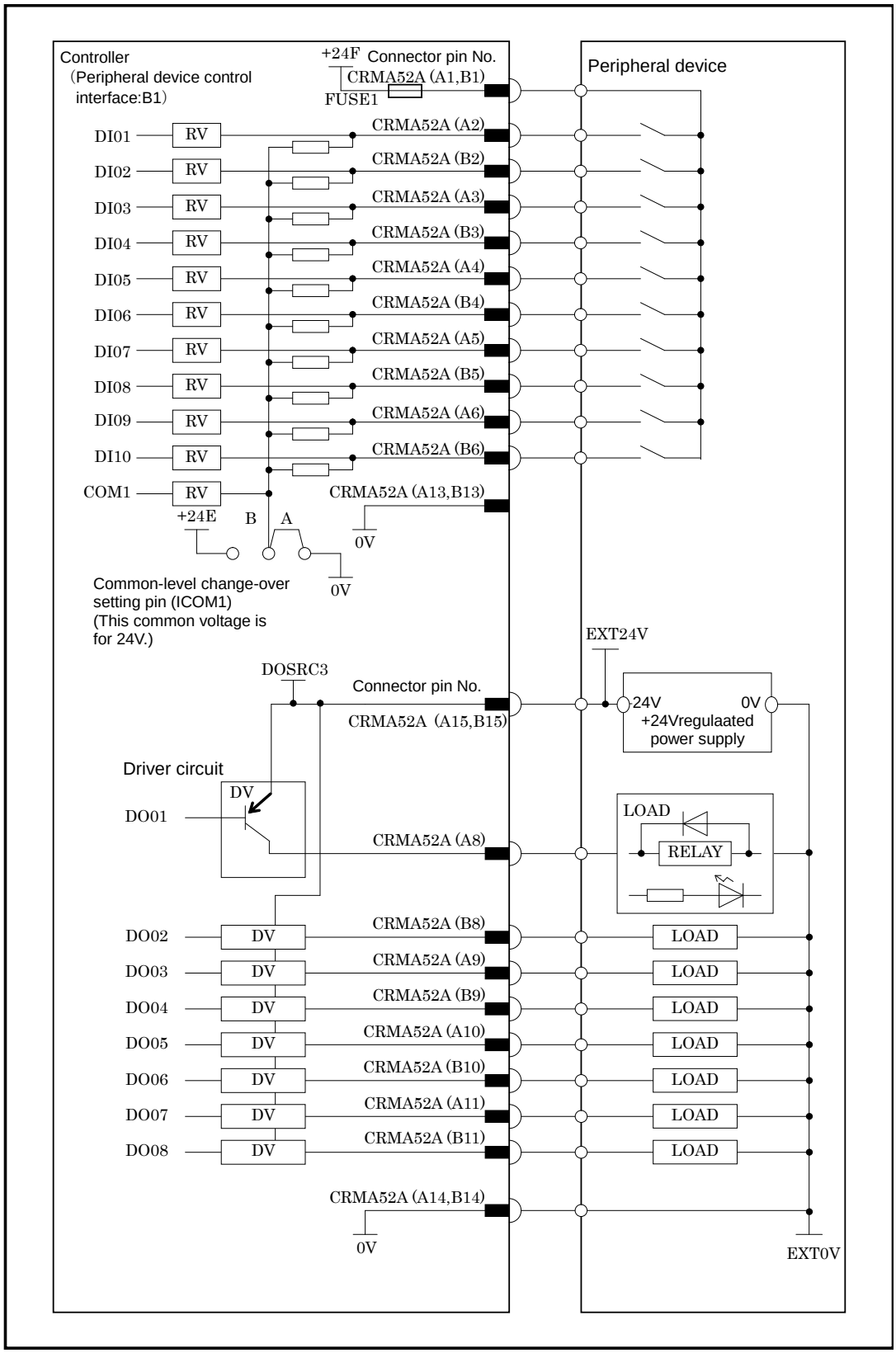

NOTE
In this diagram, common voltage of input device is 24V.

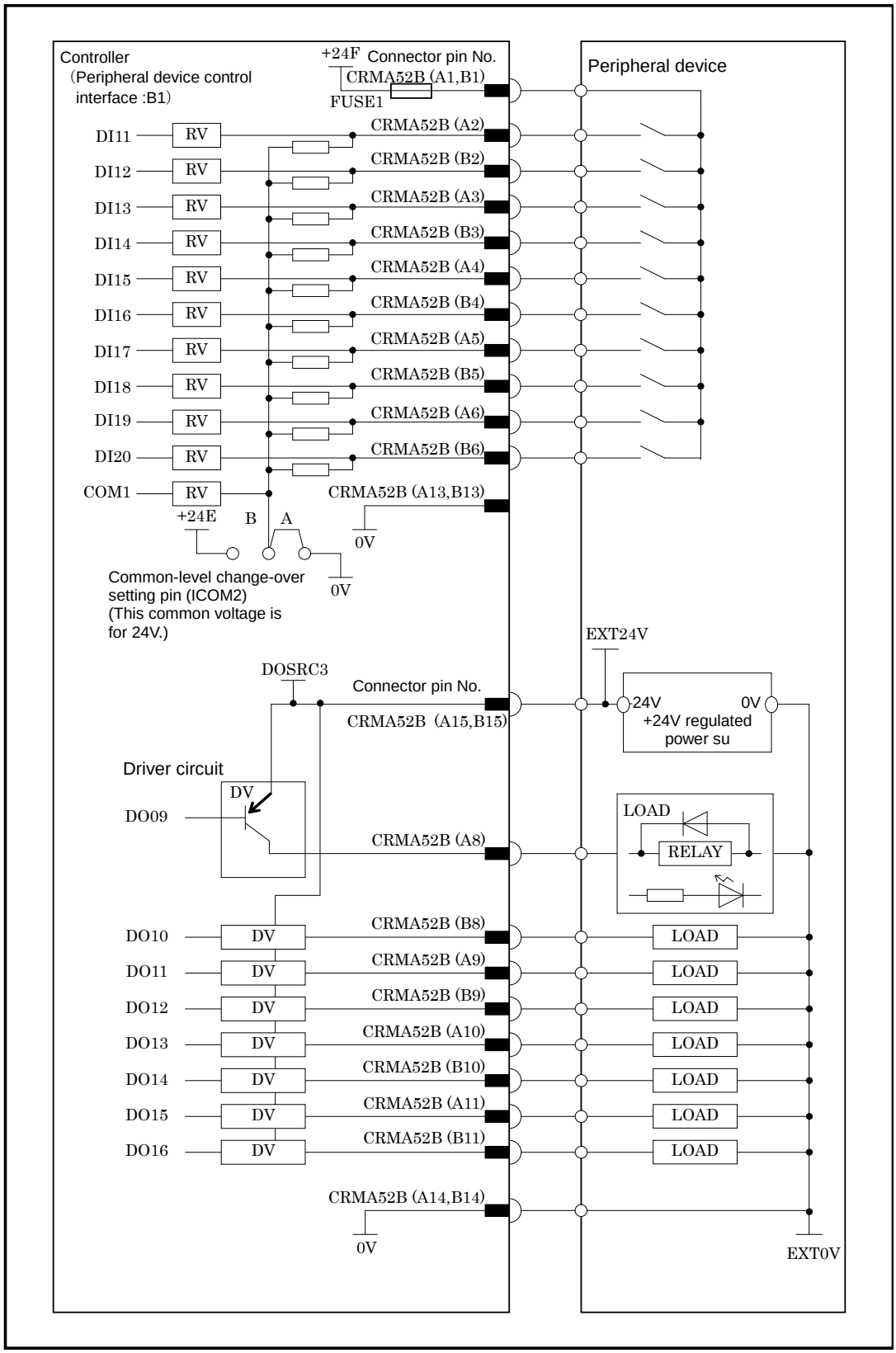

NOTE
In this diagram, common voltage of input device is +24V.

The following shows the connector interface of the optional peripheral device cables on the peripheral device side.

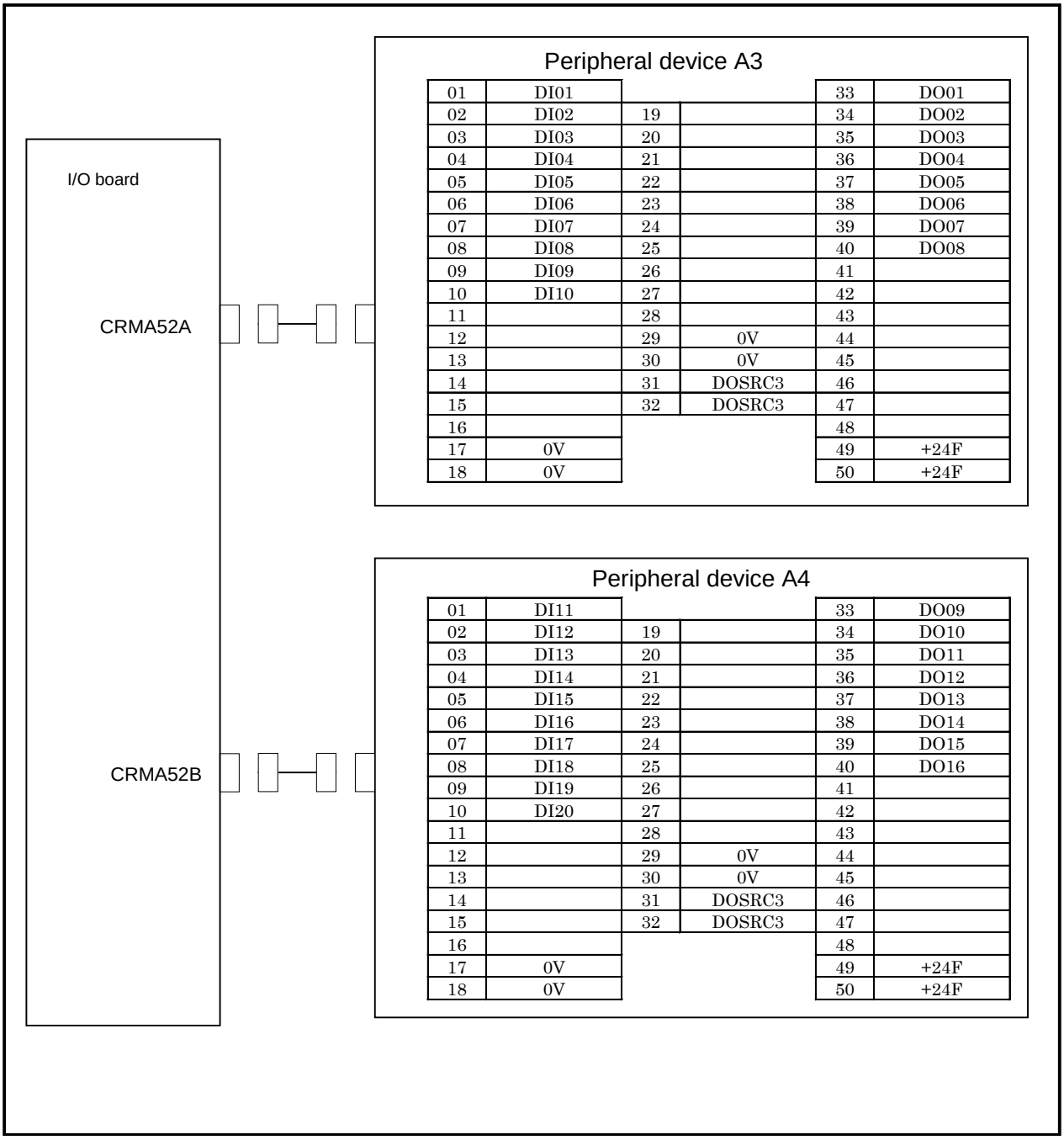

Peripheral device A3

01	DI01			33	DO01
02	DI02	19		34	DO02
03	DI03	20		35	DO03
04	DI04	21		36	DO04
05	DI05	22		37	DO05
06	DI06	23		38	DO06
07	DI07	24		39	DO07
08	DI08	25		40	DO08
09	DI09	26		41	
10	DI10	27		42	
11		28		43	
12		29	0V	44	
13		30	0V	45	
14		31	DOSRC3	46	
15		32	DOSRC3	47	
16				48	
17	0V			49	+24F
18	0V			50	+24F

Peripheral device A4

01	DI11			33	DO09
02	DI12	19		34	DO10
03	DI13	20		35	DO11
04	DI14	21		36	DO12
05	DI15	22		37	DO13
06	DI16	23		38	DO14
07	DI17	24		39	DO15
08	DI18	25		40	DO16
09	DI19	26		41	
10	DI20	27		42	
11		28		43	
12		29	0V	44	
13		30	0V	45	
14		31	DOSRC3	46	
15		32	DOSRC3	47	
16				48	
17	0V			49	+24F
18	0V			50	+24F

NOTE
Refer to the previous page about details of connection.

4.4 INTERFACE FOR WELDER

4.4.1 Connection between the Process I/O Board MB and Welding Machines

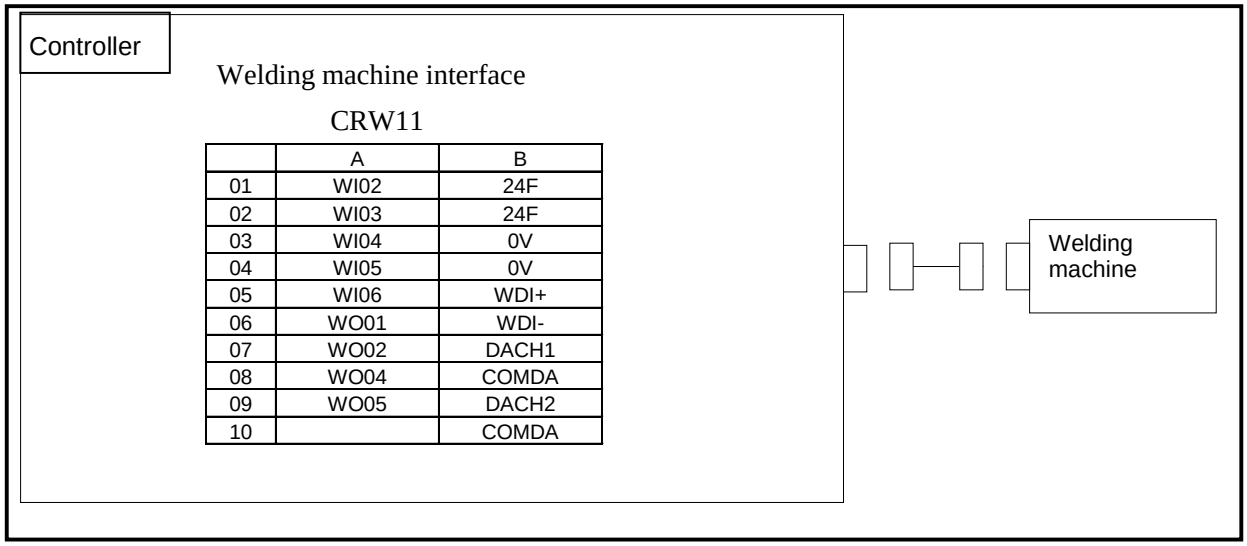

	A	B
01	WI02	24F
02	WI03	24F
03	WI04	0V
04	WI05	0V
05	WI06	WDI+
06	WO01	WDI-
07	WO02	DACH1
08	WO04	COMDA
09	WO05	DACH2
10		COMDA

NOTE
1 The welding machine connection cable is optional.

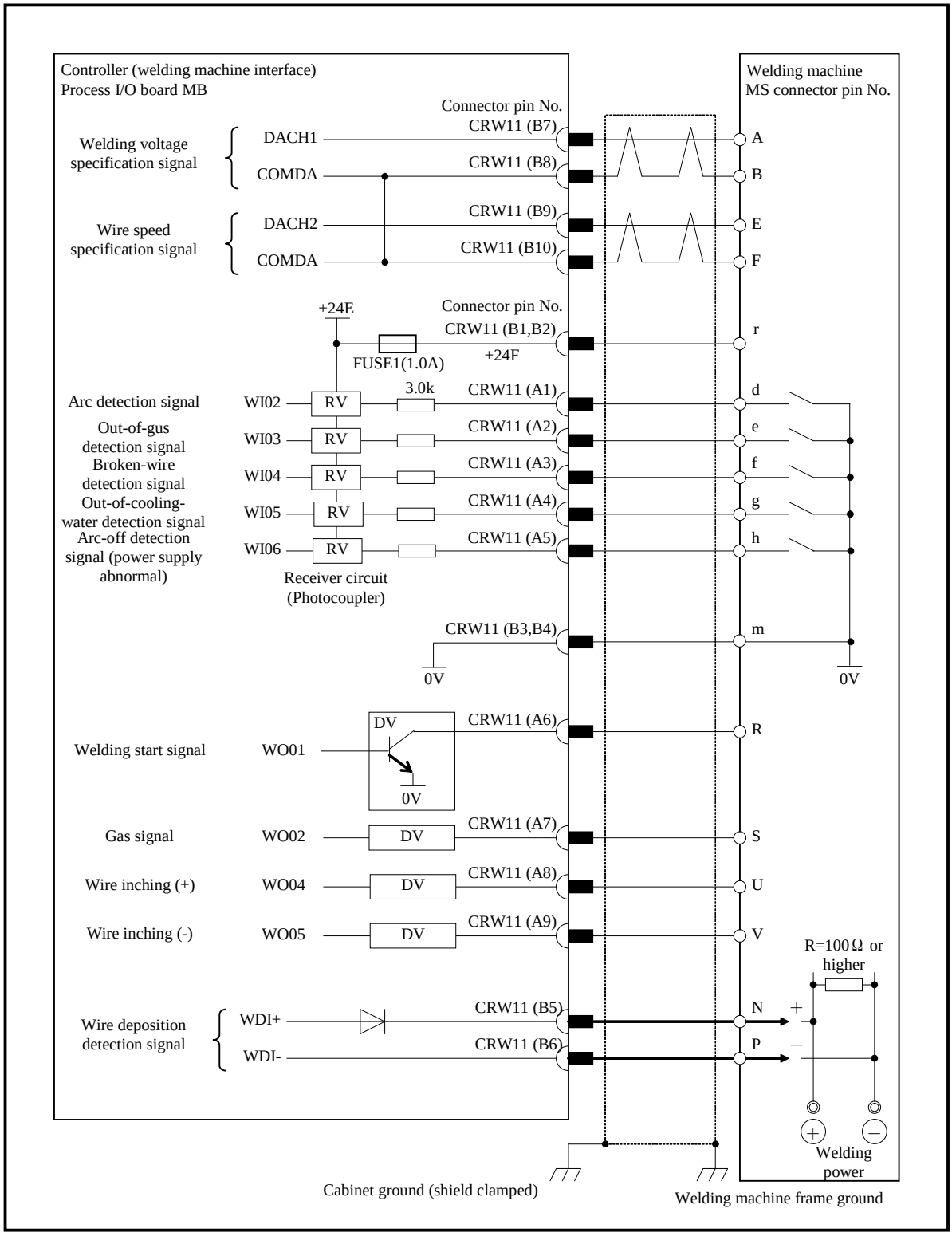

Pin-to-pin connection between CRW11 connector and welding machine connector (FANUC interface)
(Analog output, welding wire deposition detection, WI/WO connection)

4.4.2 Connection between the Process I/O Board KA, KB and Welding Machines

Control unit

Welding machine interface

CRW10

01	DACH1			33	WO1
02	COMDA1	19	ADCH1	34	WCOM1
03	DACH2	20	COMAD1	35	WO2
04	COMDA2	21	ADCH2	36	WCOM12
05	DACH3	22	COMAD2	37	WO3
06	COMDA3	23		38	WCOM3
07	WI1	24		39	WO4
08	WI2	25	WDI+	40	WCOM4
09	WI3	26	WDI-	41	WO5
10	WI4	27		42	WCOM5
11	WI5	28		43	WO6
12	WI6	29		44	WCOM6
13	WI7	30		45	WO7
14	WI8	31		46	WCOM7
15	0V	32		47	WO8
16	0V			48	WCOM8
17	0V			49	+24E
18	0V			50	+24E

Welding machine

NOTE
The welding machine connection cables are options.

Pin-to-pin connection between CRW10 connector and welding machine connector (general interface)
(Analog output, welding wire deposition detection, WI/WO connection, for connections with +24 V common)

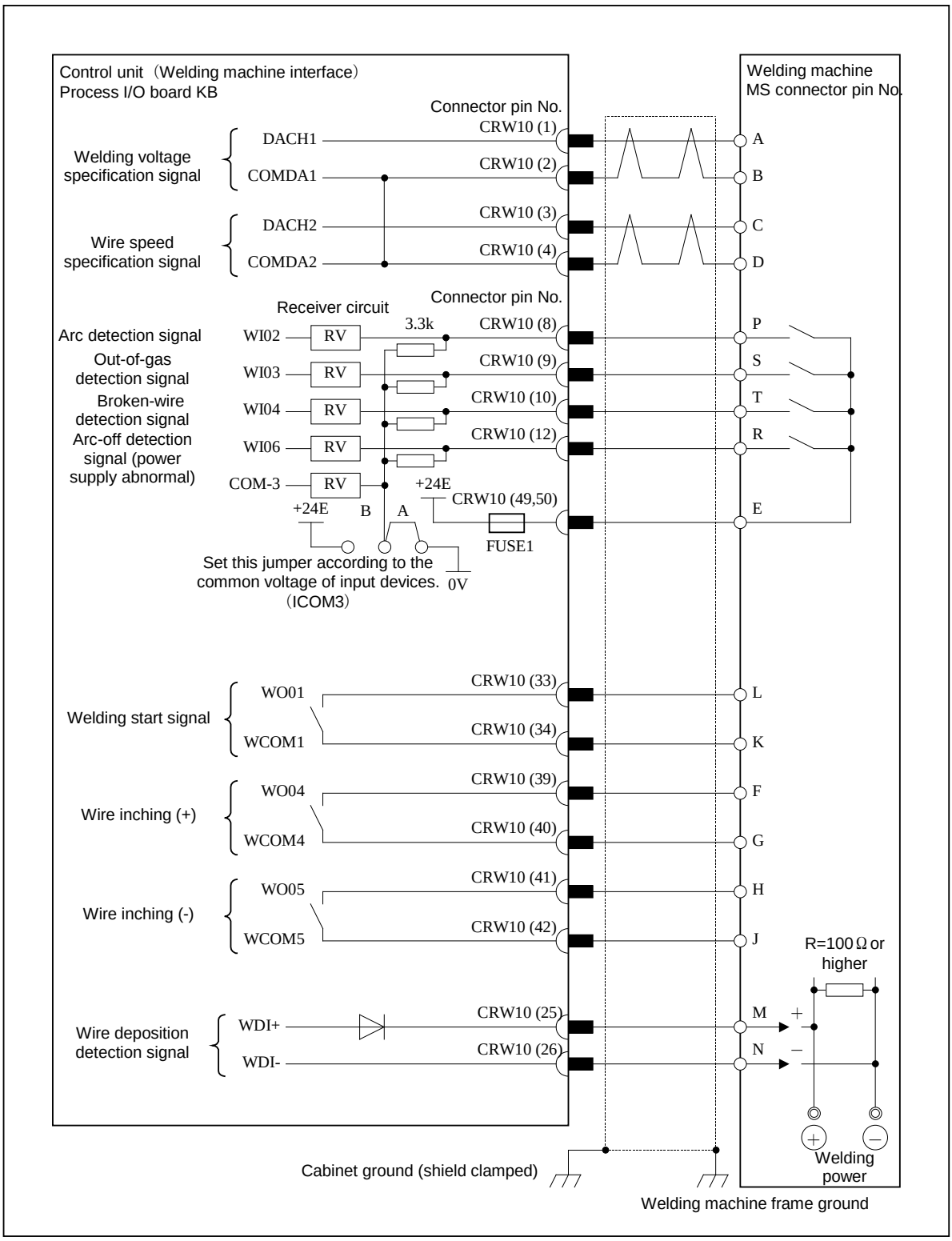

NOTE
In this diagram, common voltage of input devices is +24V.

Pin-to-pin connection between CRW10 connector and welding machine connector: FANUC interface (Analog input/output, welding wire deposition detection, WI/WO connection, for connections with +24 V common)

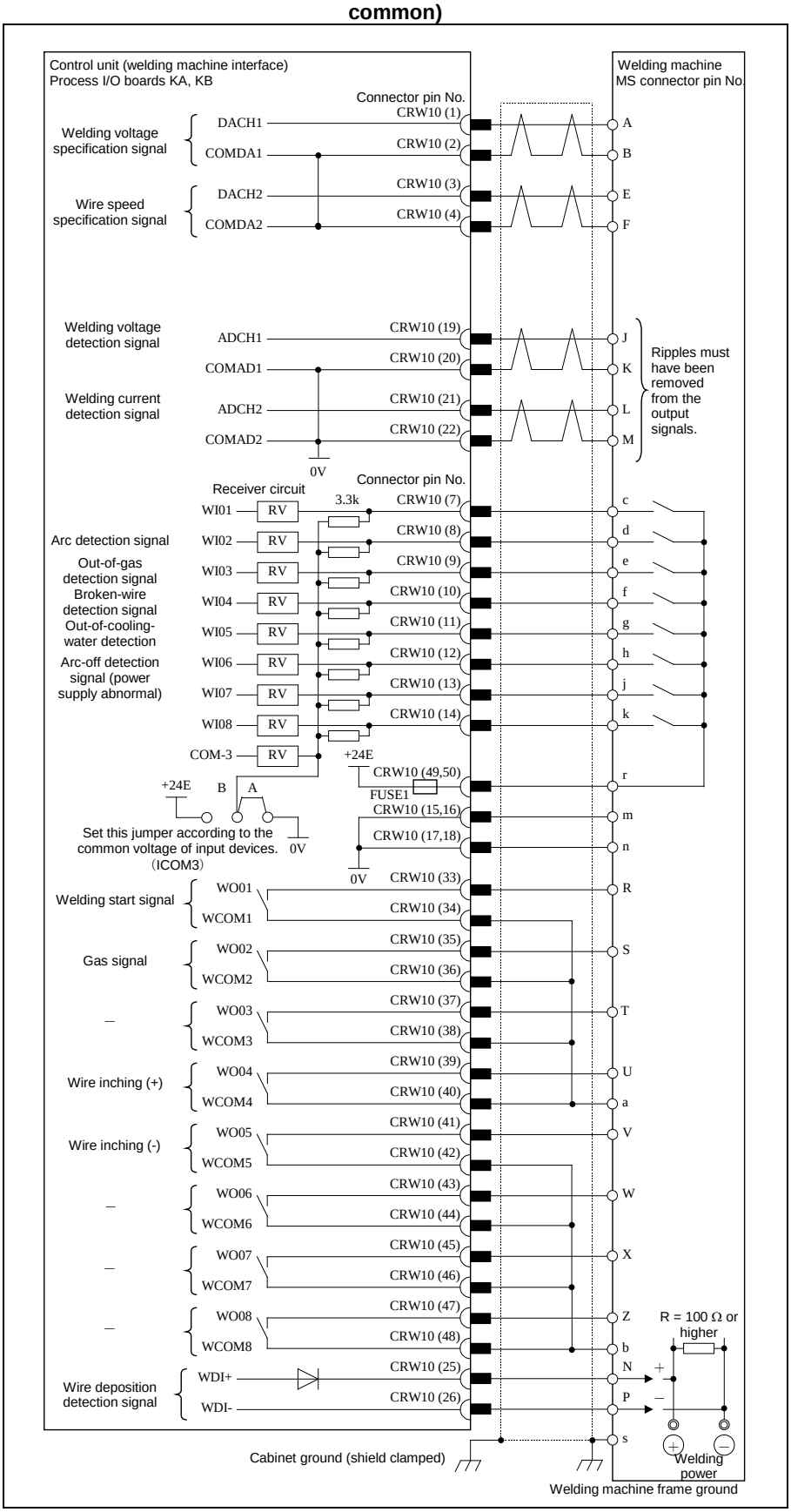

4.5 EE INTERFACE

4.5.1 Connection between the Mechanical Unit and End Effector

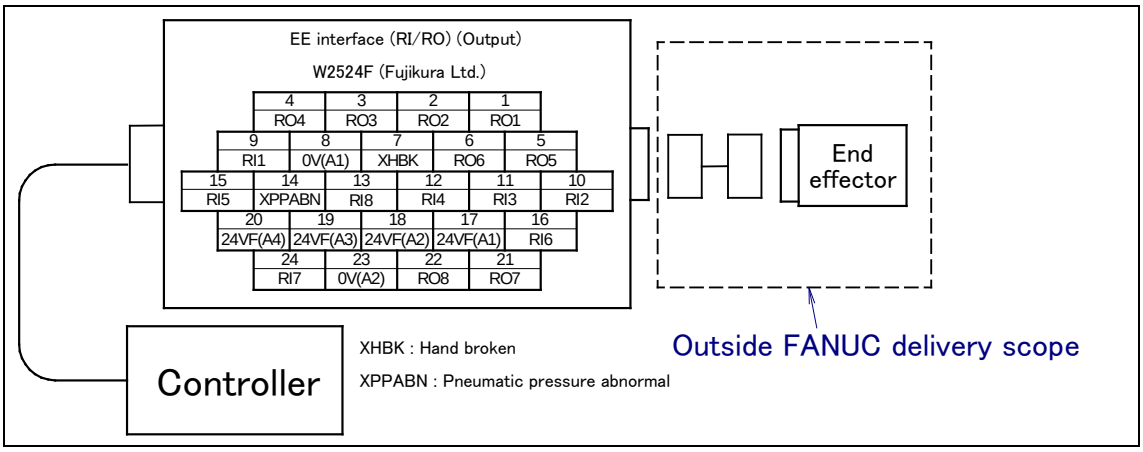

Fig.4.5.1 EE interface (In case of R-2000*i*B or M-710*i*C)

NOTE
EE interface depends on the option of the robot. Refer to the robot-specific operator's manual.

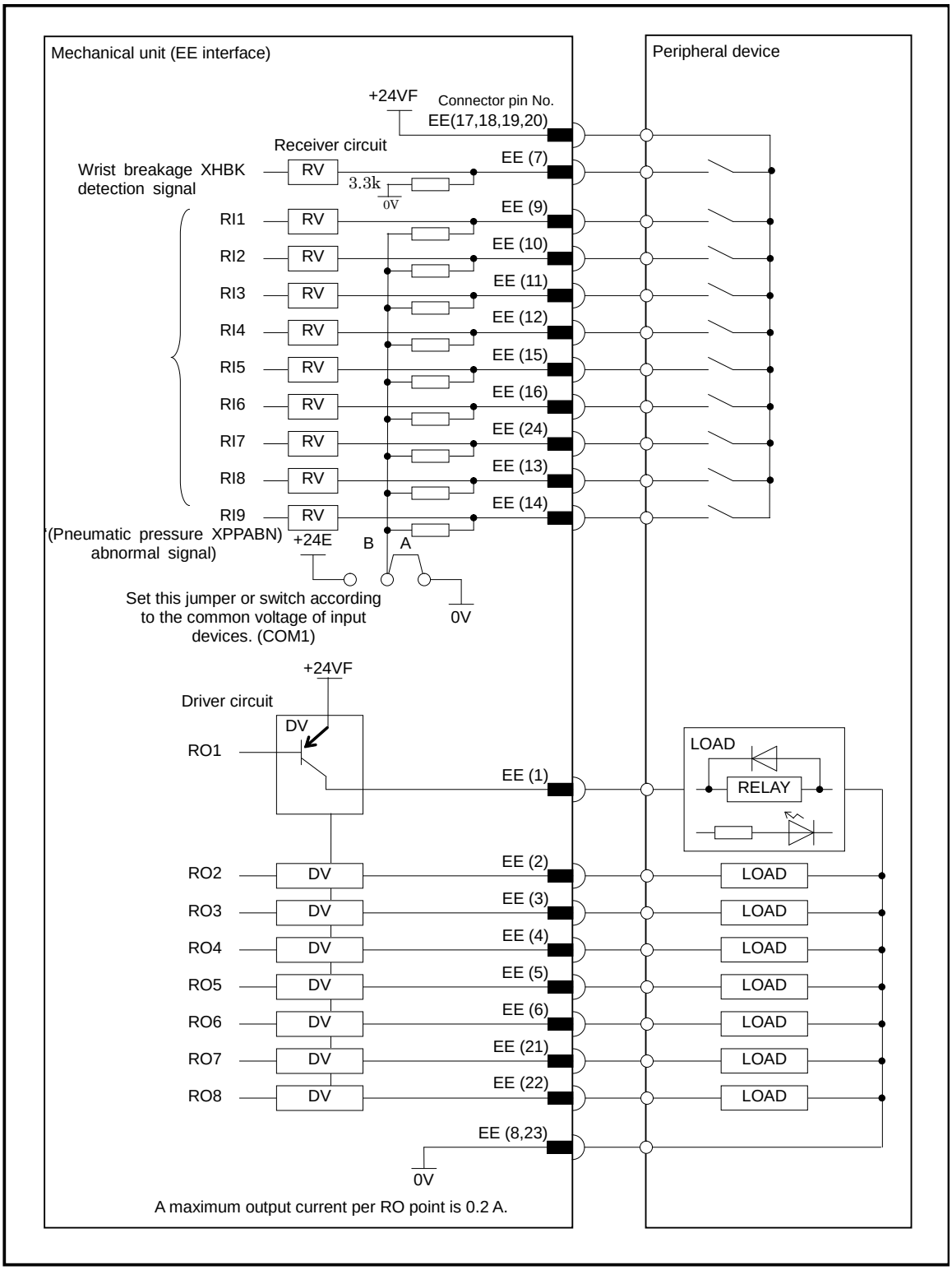

NOTE

1 In this diagram, common voltage of input devices is +24V.

2 The common-level change-over setting pin or switch (COM1) is in the 6-axis servo amplifier.

4.6 DIGITAL I/O SIGNAL SPECIFICATIONS

This section describes the specifications of the digital I/O signals interfaced with the peripheral device, end effector, and arc welder.

4.6.1 Peripheral Device Interface A

(1) Output signals in peripheral device interface A (Source type DO)

(a) Example of connection

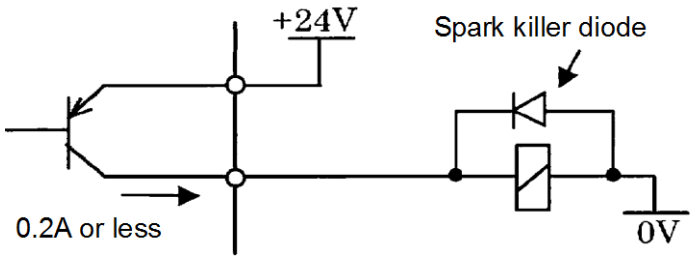

(b) Electrical specifications

Maximum load current when driver is on:	200mA (including momentary level)
Saturation voltage when driver is on:	1.0V max.
Dielectric strength:	24V ±20% (including momentary level)
Leakage current when driver is off:	100μA

(c) The external power supply to output signals must satisfy the following:

Power supply voltage: +24V ±10%

Power supply current: For each printed circuit board of this type (Total sum of maximum load currents including momentary levels + 100mA or more)

Power-on timing:

At the same time when the controller is turned on or earlier

Power-off timing:

At the same time when the controller unit is turned off or later

(d) Spark killer diode

Rated peak reverse voltage:	100V or more
Rated effective forward current:	1A or more

(e) Driver for output signals

In the driver device, the current of each output signal is monitored, and when an overcurrent is detected, the relevant output is turned off. After an output has been turned off by overcurrent, the overcurrent state is released because the output is off, so the output on state is restored. Therefore, in the ground fault or overcurrent state, the output is turned on and off repeatedly. Such a condition is found also when a load with a high surge current is connected.

The driver device also includes an overheat detection circuit, which turns off all outputs of the device when the internal temperature of the device has increased as a result of a continued overcurrent state due to a ground fault of an output and so on. The outputs are held off, but their normal states can be restored by turning the power to the controller on and off after the internal temperature of the device has lowered.

(f) Note on use

Do not use the +24V power supply of the robot.

When adding a relay, solenoid, or the like directly to the circuit, connect a diode for counter electromotive voltage protection in parallel to the load.

When using a load, such as a lamp, that generates surge current when it is turned on, install a protection resistor.

(g) Applicable signals
Output signals of process I/O board CRMA5 and CRMA6
CMDENBL, SYSRDY, PROGRUN, PAUSED, HELD, FAULT, ATPERCH, TPENBL, BATALM, BUSY,
ACK1 to ACK8, SNO1 to SNO8, SNACK, DO1 to DO76

(2) Input signals in peripheral device interface A

(a) Example of connection

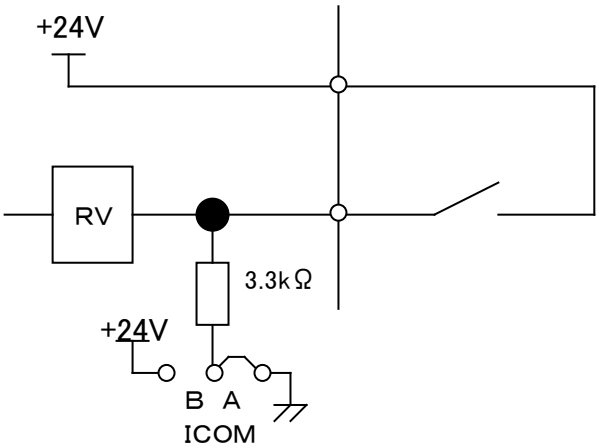

(b) Electrical specifications of the receiver

Type:	Grounded voltage receiver
Rated input voltage:	Contact close : +20V to +28V
	Contact open : 0V to +4V
Maximum applied input voltage:	+28VDC
Input impedance:	3.3kΩ (approx.)
Response time:	5ms to 20ms

(c) Specifications of the peripheral device contact

Voltage and Current:	DC24V, 0.1A
	(Use a contact whose minimum applicable load is 5mA or less.)
Input signal width:	200ms or more (on/off)
Chattering time:	5ms or less
Closed circuit resistance:	100Ω or less
Opened circuit resistance:	100kΩ or more

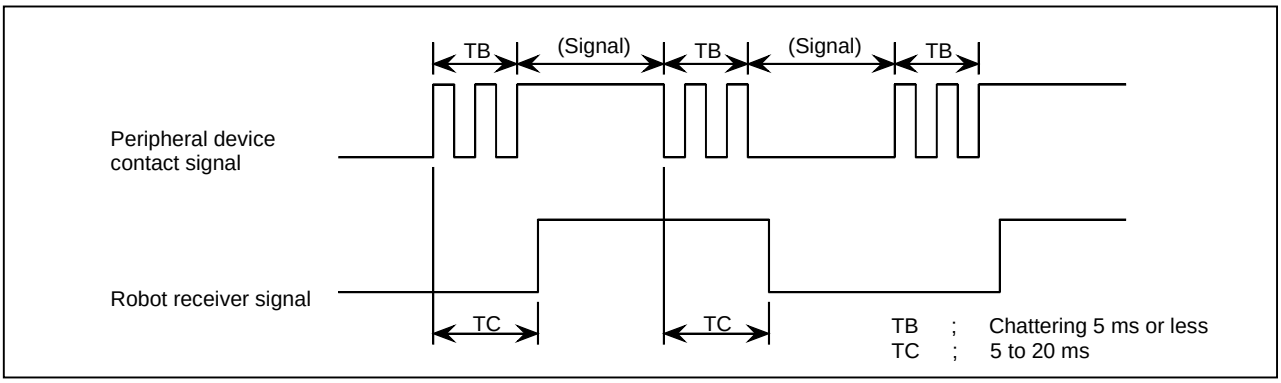

(d) Note on use
Apply the +24 V power at the robot to the receiver.
However, the above signal specifications must be satisfied at the robot receiver.

(e) Applicable signals
Input signals of process I/O board CRMA5 and CRMA6
XIMSTP, XHOLD, XSFSD, CSTOPI, FAULT RESET, START, HOME, ENBL, RSR1 to RSR8, PNSTROBE, PROD START, DI1 to DI78

4.6.2 EE Interface

(1) Output signals in EE interface
(a) Example of connection

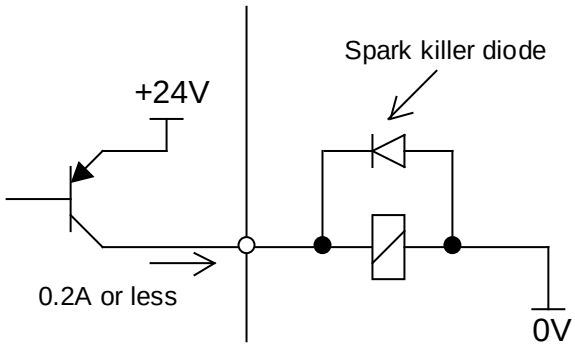

(b) Electrical specifications

Maximum load current when driver is on:	200mA (including momentary level)
Saturation voltage when driver is on:	1.0V max.
Dielectric strength:	24V ±20% (including momentary level)
Leakage current when driver is off:	100μA

(c) Power supply to output signals
The +24V power supply on the robot side can be used if the total current level, including the current of the welding interface, is 0.7A or less.

(d) Driver for output signals
In the driver device, the current of each output signal is monitored, and when an overcurrent is detected, the relevant output is turned off. After an output has been turned off by overcurrent, the overcurrent state is released because the output is off, so the output on state is restored. Therefore, in the ground fault or overcurrent state, the output is turned on and off repeatedly. Such a condition is found also when a load with a high surge current is connected.
The driver device also includes an overheat detection circuit, which turns off all outputs of the device when the internal temperature of the device has increased as a result of a continued overcurrent state due to a ground fault of an output and so on. The outputs are held off, but their normal states can be restored by turning the power to the controller on and off after the internal temperature of the device has lowered.

(e) Note on use
When adding a relay, solenoid, or the like directly to the circuit, connect a diode for counter electromotive voltage protection in parallel to the load.
When using a load, such as a lamp, that generates surge current when it is turned on, install a protection resistor.

(f) Applicable signals
RO1 to RO8

(2) Input signal in peripheral device interface
The input signals are the same as those of other I/O boards. (Refer to Subsection 4.5.1 in CONNECTIONS.)

(a) Applicable signals
RI1 to RI8, XHBK, XPPABN

4.6.3 I/O Signal Specifications for ARC-Welding Interface (A-cabinet/Process I/O Board MB)

(1) Specification for arc welding machine interface digital output signals

(a) Example of connection

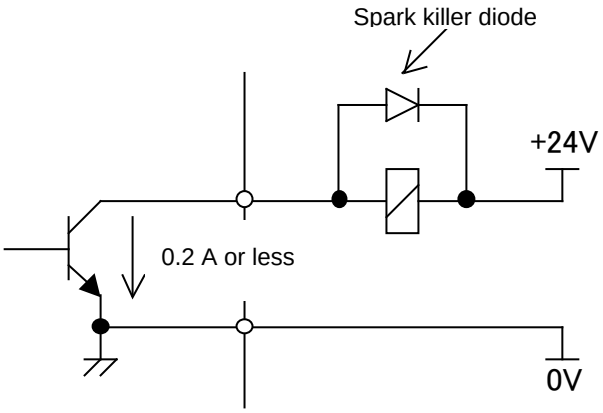

(b) Electrical specifications

Rated voltage:	24VDC
Maximum applicable voltage:	30VDC
Maximum load current:	200mA (including momentary level)
Transistor type:	Open-collector NPN
Saturation voltage when the circuit is on:	Approximately 1.0V

(c) Spark killer diode

Rated peak-to-peak reverse withstand voltage:	100V or higher
Rated effective forward current:	1A or more

(d) Caution for use
The arc welding machine interface can use the +24V power supply of the robot unless the sum of its sink current and that of the EE interface exceeds 0.7A. When using a relay or solenoid directly as a load, connect the load and a back electromotive force voltage prevention diode in parallel.
When using a load, such as a lamp, that generates surge current when it is turned on, install a protection resistor.

(e) Applicable signals
Arc welding machine interface output signals
[WO1, 2,4,5]

(2) Specification for arc welding machine interface digital output signals

(a) Example of connection

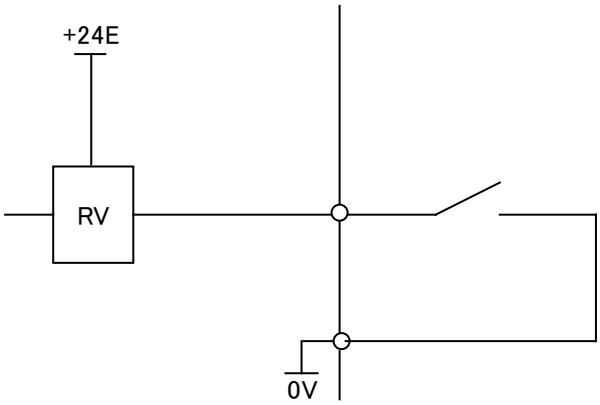

(b) Electrical specifications of the receiver

Type:	Grounded voltage receiver	
Rated input voltage:	Contact close	+20V to +28V
	Contact open	0V to +4V
Maximum applied input voltage:	+28VDC	
Input impedance:	3.0kΩ (approx.)	
Response time:	5ms to 20ms	

(c) Specifications of the peripheral device contact

Voltage and Current:	DC24V, 0.1A (Use a contact whose minimum applicable load is 5mA or less.)
Input signal width:	200ms or more (on/off)
Chattering time:	5ms or less
Closed circuit resistance:	100Ω or less
Opened circuit resistance:	100kΩ or more

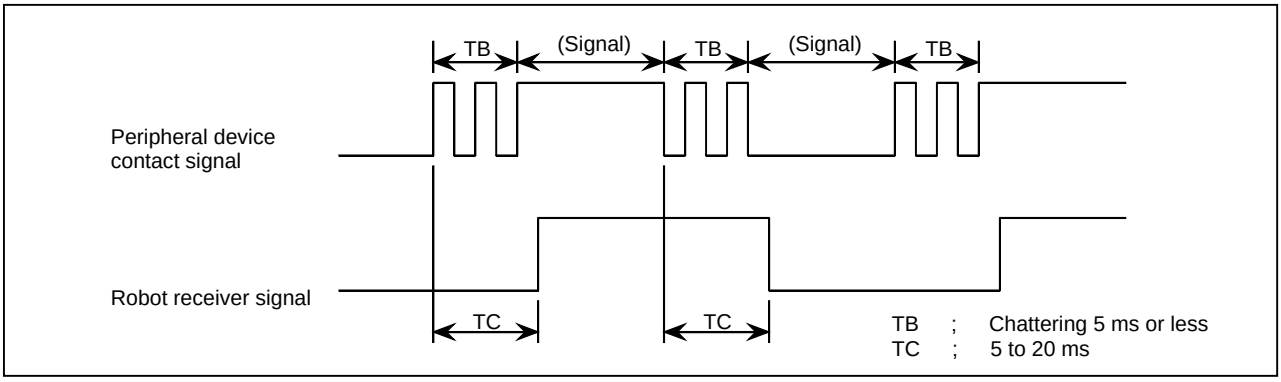

(d) Note on use

Apply the +24 V power at the robot to the receiver.

However, the above signal specifications must be satisfied at the robot receiver.

(e) Applicable signals

Arc welding machine interface input signals

[WI2 to 6]

(3) Specification for arc welding machine interface analog output signals (welding voltage and wire feed speed specification signals)

(a) Example of connection

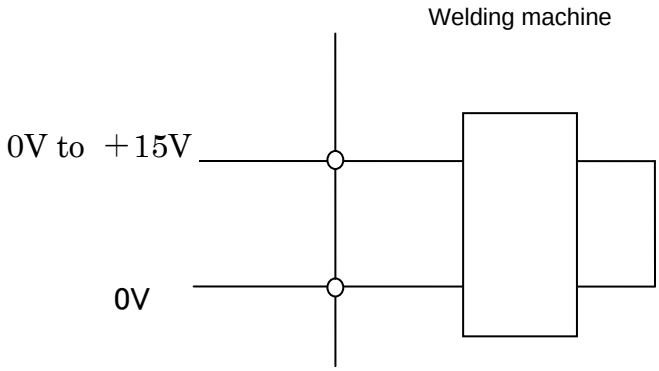

(b) Caution for use

Input impedance: 3.3kΩ or higher

Install a high-frequency filter.

(Wire deposit detection: WDI+ and WDI-)

(a) Example of connection

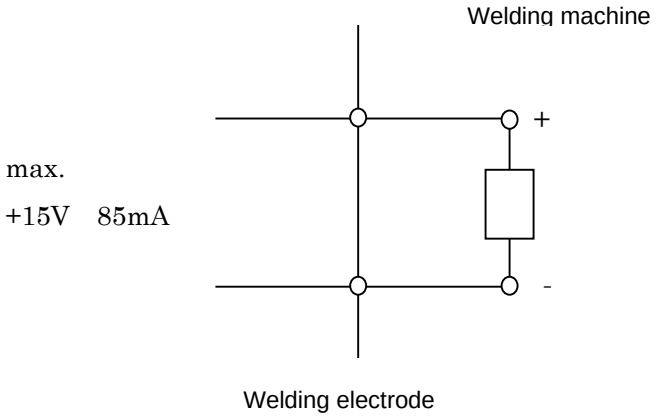

(Wire deposition detection: WDI+, WDI-)

(b) Caution for use

The resistance between the + and - terminals of the welding machine must be 100 Ω or higher.

The TIG welding deposition detection circuit must be isolated from the welding circuit (high frequency).

This circuit can withstand up to 80 V.

4.7 SPECIFICATIONS OF THE CABLES USED FOR PERIPHERAL DEVICES AND WELDERS

If the customer manufactures cables, make sure they conform to the FANUC standard cables described in this section.
(See the description in "Peripheral Device Interface" in this manual for the specifications of the FANUC standard cables.)

4.7.1 Peripheral Device Interface A Cable (CRMA5*: Honda Tsushin, 50 pins)

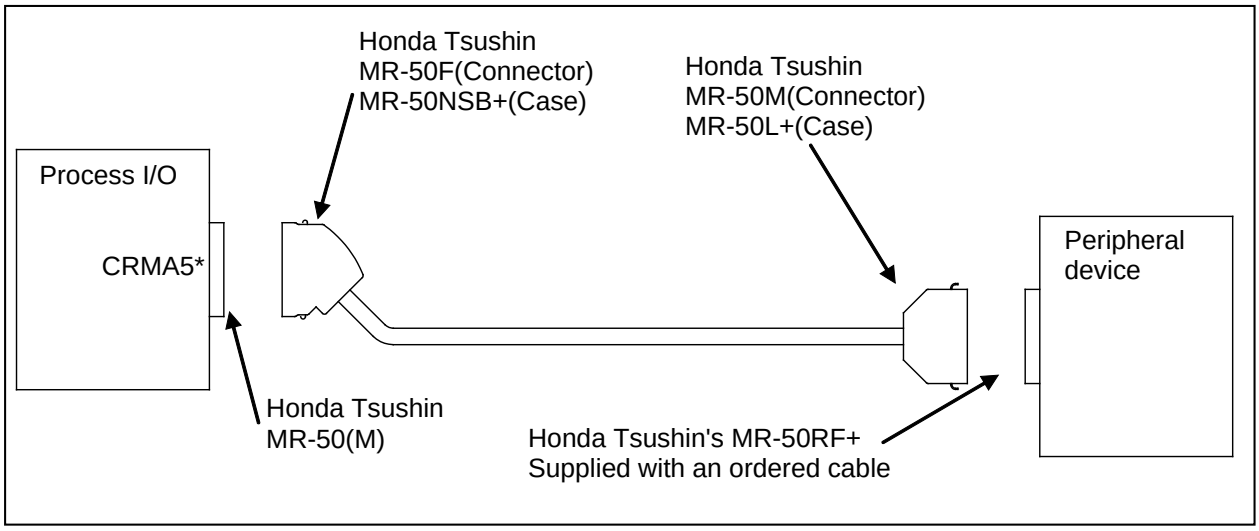

4.7.2 Peripheral Device Interface B Cable (CRMA6*: Honda Tsushin, 20 pins)

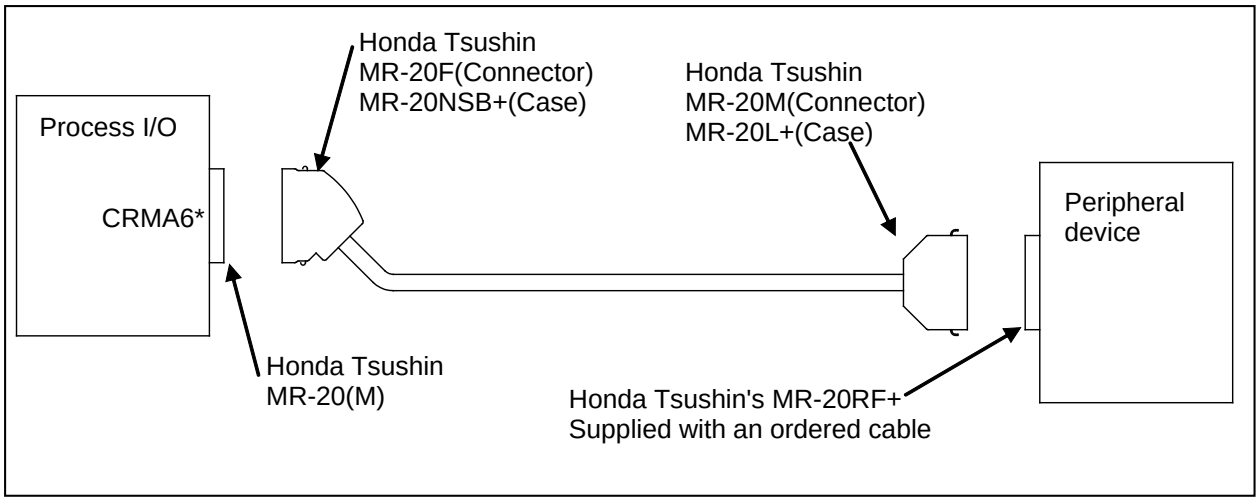

4.7.3 Peripheral Device Interface B1 and B2 Cables (CRMA52; TE Connectivity 30 pin)

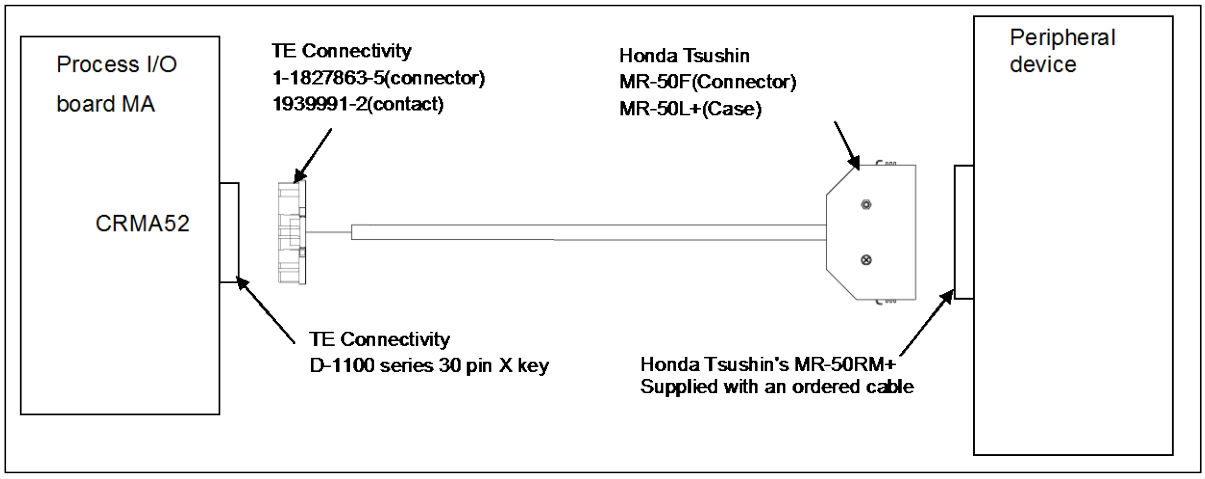

4.7.4 ARC Weld Connection Cables (CRW11; TE Connectivity 20 pin)

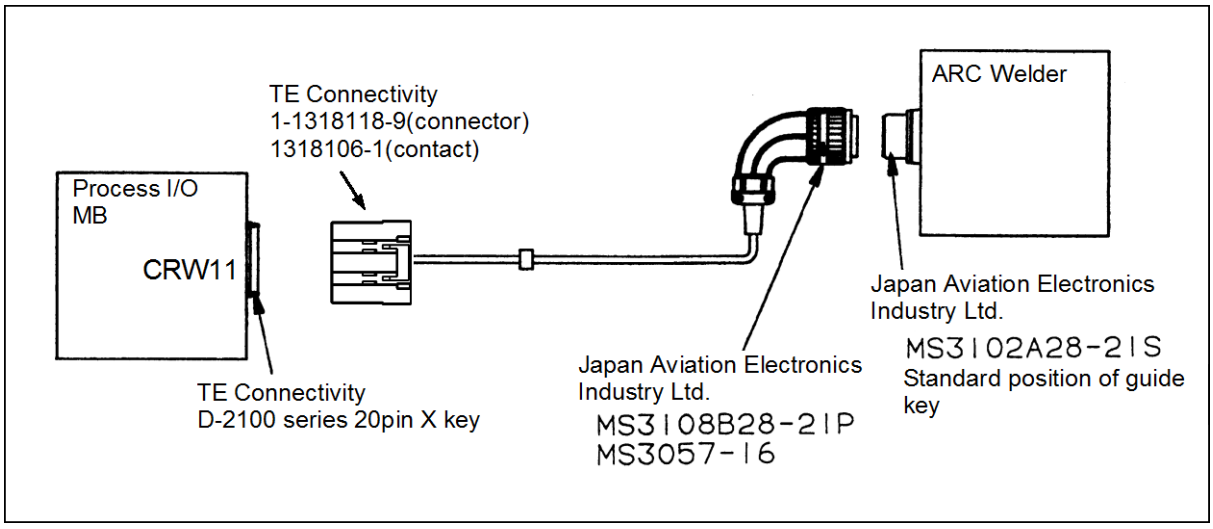

4.8 CABLE CONNECTION FOR THE PERIPHERAL DEVICES, END EFFECTORS, AND ARC WELDERS

4.8.1 Peripheral Device Connection Cable

Fig.4.8.1(a) shows the connection of the peripheral device cable in the cabinet.

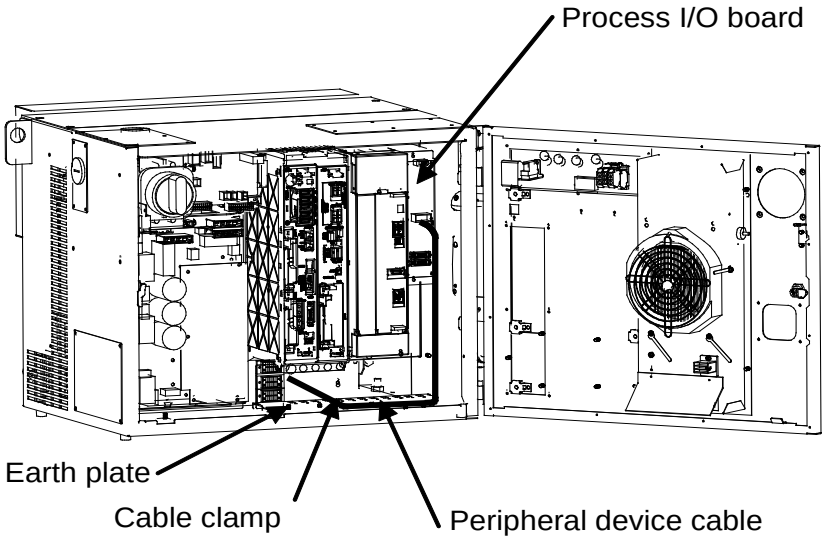

(A-cabinet)

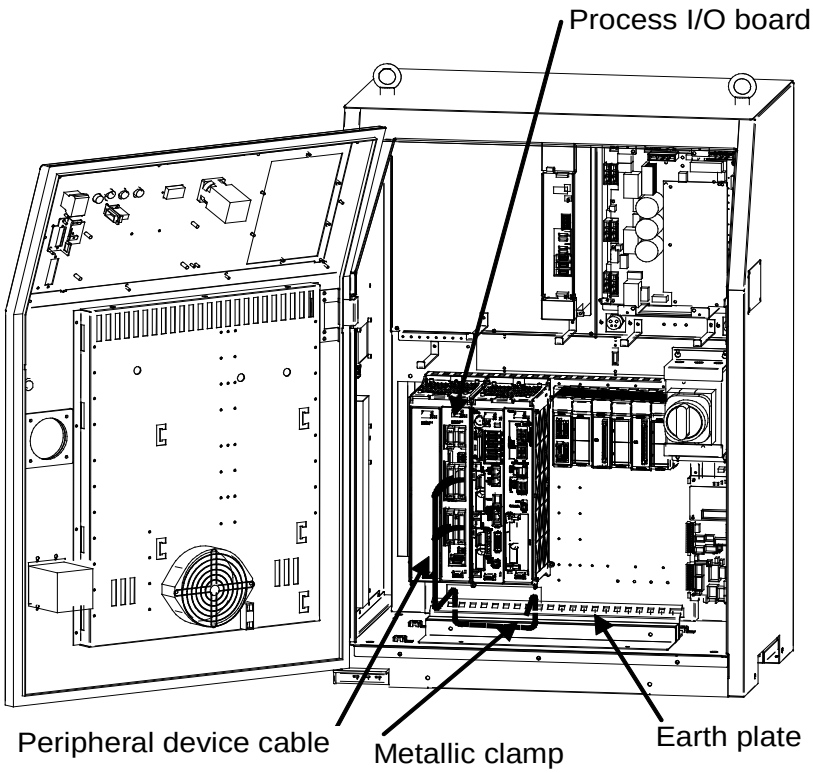

(B-cabinet)

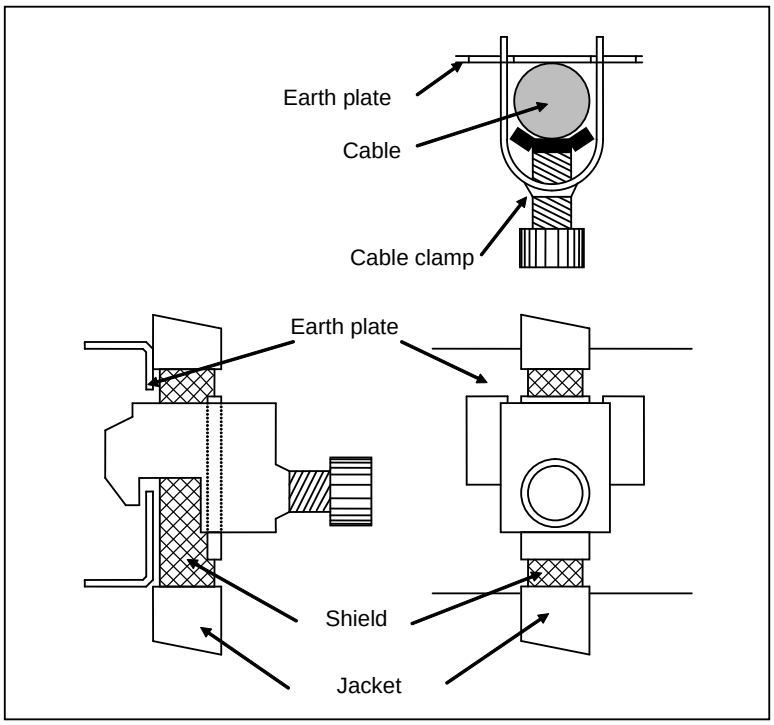

NOTE

For protection against the noise, cut part of the jacket of the connection cable to expose the shield, and fasten this part to the earth plate with the cable clamp.

Fig.4.8.1(a) Peripheral Device Cable Connection

4.8.2 Peripheral Device Cable Connector

(1) Fig.4.8.2 shows the connector for peripheral device cables A and B.

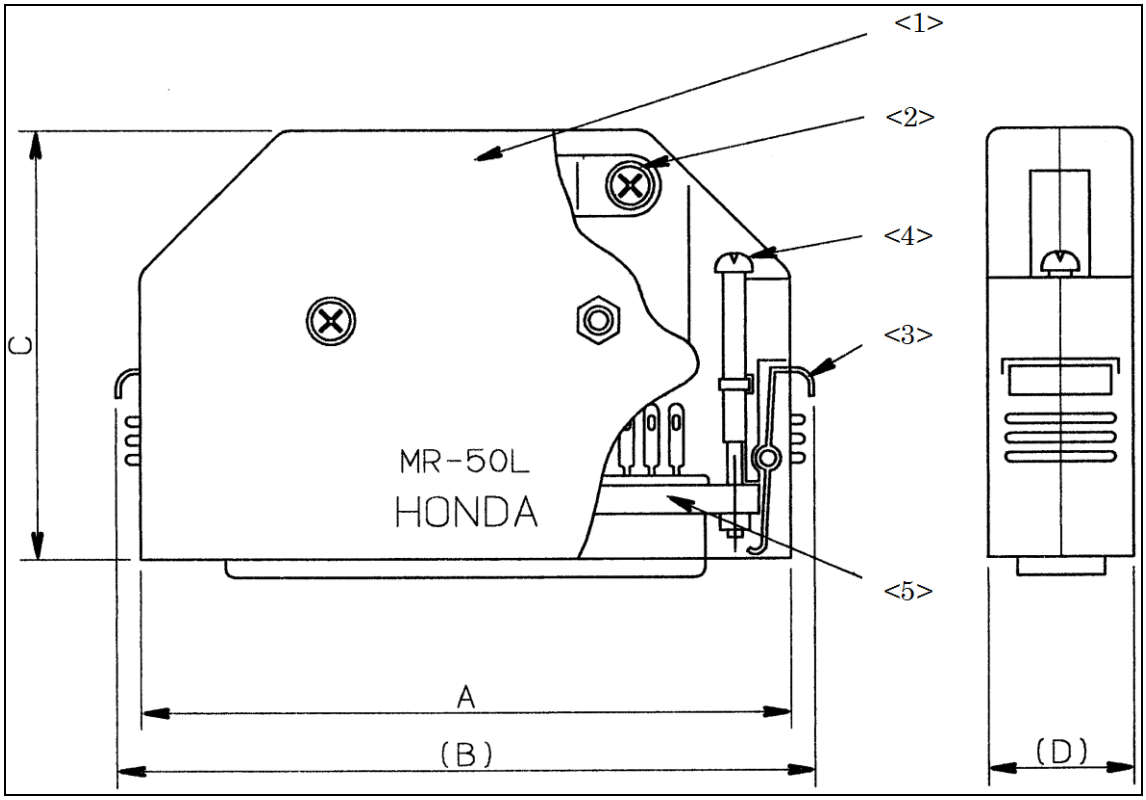

Connector specifications	Applicable interface	Dimensions				Remark
		A	(B)	C	(D)	
MR-50F(Connector) MR-50L+(Case)	CRMA5	67.9	73.5	44.8	18	Honda Tsushin Kogyo, 50 pins Female, Solder type
MR-20F(Connector) MR-20L+(Case)	CRMA6	39.3	44.9	39.8	17	Honda Tsushin Kogyo, 20 pins Female, Solder type

Symbol	Name
<1>	Connector cover
<2>	Cable clamp screw
<3>	Connector clamp spring
<4>	Connector clamp screw
<5>	Connector

Fig.4.8.2 (a) Peripheral device cable connector

(1) Fig.4.8.2 shows the connector for peripheral device cables A1 and A2.

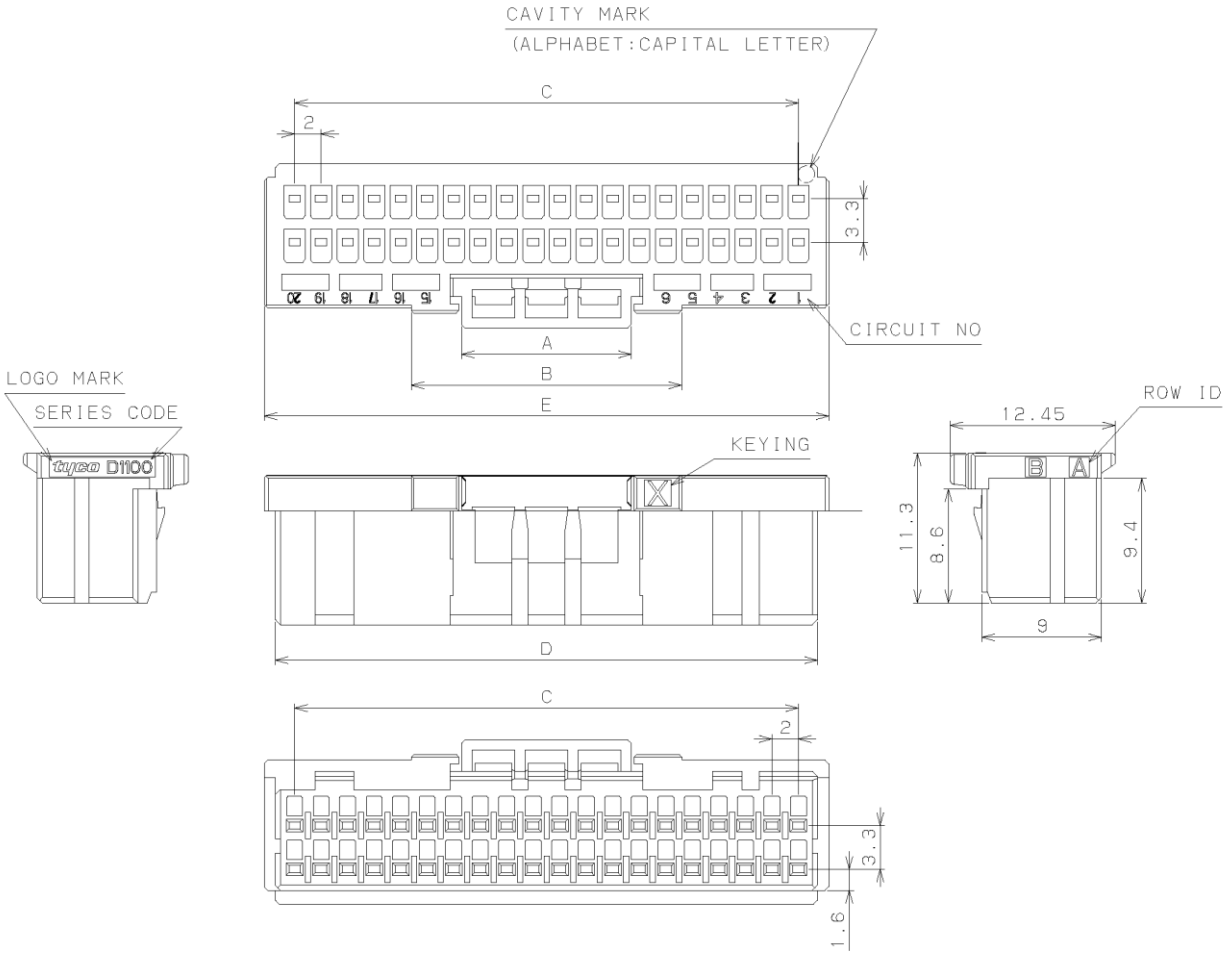

Connector specifications	Applicable interface	Dimensions					Remark
		A	B	C	D	E	
1-1827863-5 (Rece-housing)	CRMA52	12.8	20.4	28.0	30.9	32.6	TE Connectivity D-1000 series 30pin (X-key)
1939991-2 (Rece-contact)	CRMA52						TE Connectivity
1-1827863-0 (Rece-housing)	CRMA90	12.8	20.4	38.0	40.9	42.6	TE Connectivity D-1000 series 40pin (X-key)
1939992-2 (Rece-contact)	CRMA90						TE Connectivity

Maintenance tool

Hand tool (for crimping contact) 2119141-1:A05B-2550-K064
Extraction tool 1891526-1:A05B-2550-K061

Fig.4.8.2 (b) Peripheral device cable connector

(2) Peripheral device connector

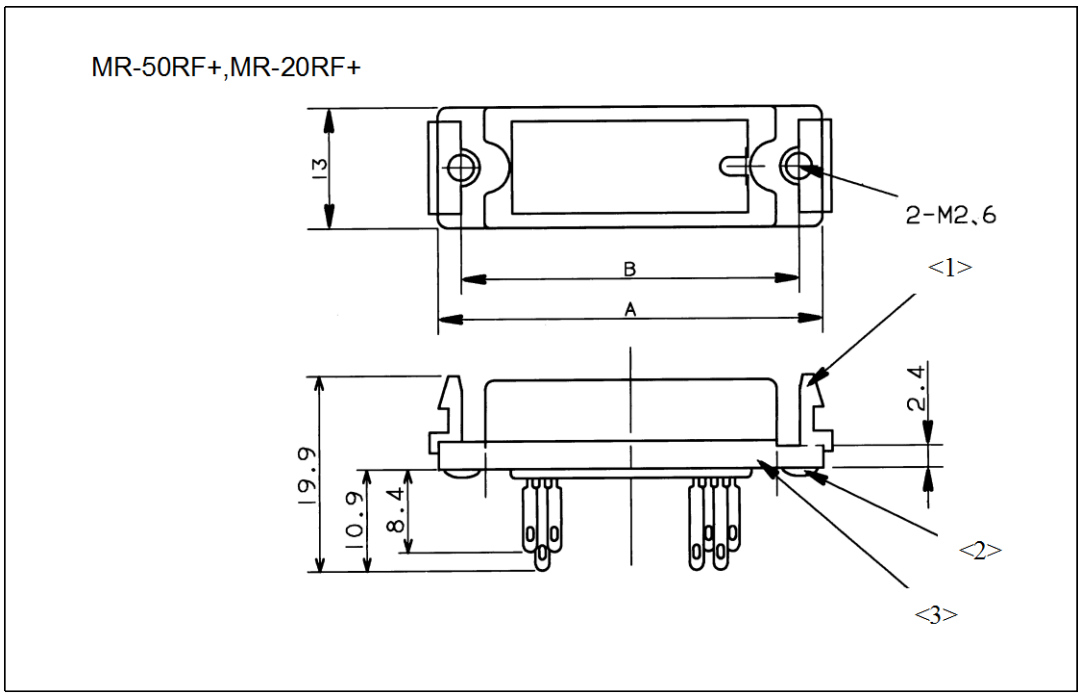

Connector specifications	Applicable	Dimensions		Remark
		A	B	
MR-50RF+	Peripheral device	61.4	56.4	Honda Tsushin Kogyo, 50 pins Female, Solder type
MR-20RF+	Peripheral device	39.3	44.9	Honda Tsushin Kogyo, 20 pins Female, Solder type

Symbol	Name
<1>	Connector clamp screw
<2>	Screw M2.6 x 8
<3>	Connector

Fig.4.8.2 (c) Peripheral device connector

4.8.3 End Effector Cable Connector (EE interface)

(1) Connector external view (Example: For R-2000*i*B, M-710*i*C)

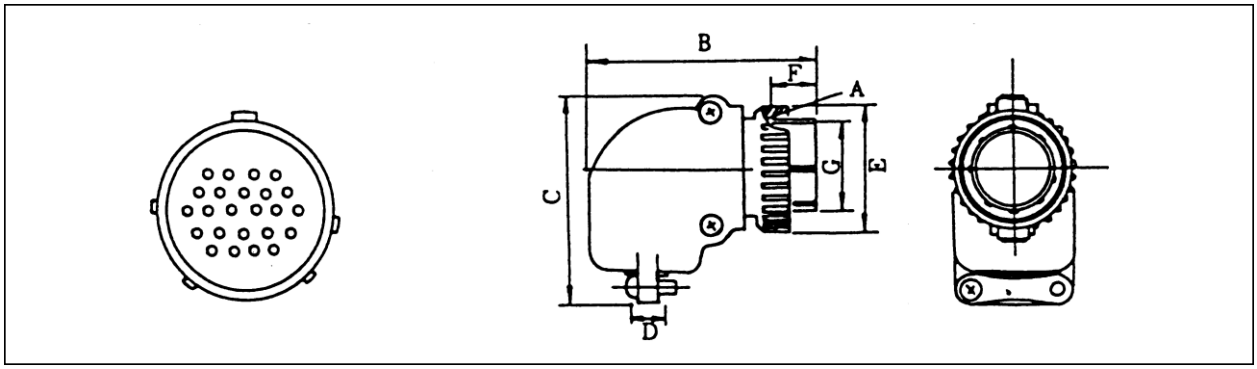

A: M30 x 1
B: 63.0
C: 54.5
D: 9.6 to 15.0 (Inside diameter)
E: ϕ33
F: 11.2
G: 24.7
Manufactured by Fujikura JMLP2524M

Fig.4.8.3 (a) Connector (Elbow Type)

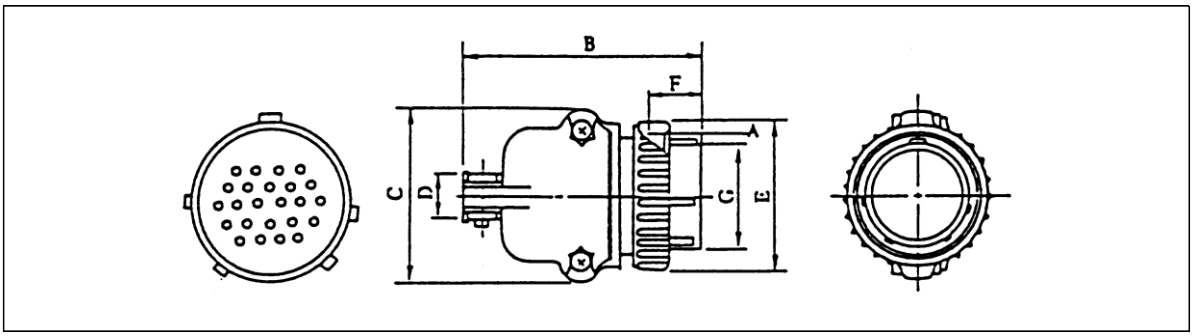

A: M30 x 1
B: 54.1
C: 37.5
D: 9.6 to 15.0 (Inside diameter)
E: ϕ33
F: 11.2
G: 24.7
Manufactured by Fujikura JMLP2524M

Fig.4.8.3 (b) Connector (Straight Type)

NOTE
EE interface depends on the option of the robot. Refer to the robot-specific operator's manual of each robot.

4.8.4 Recommended Cables

(1) Peripheral device connection cable
Connect a peripheral device using a completely shielded, heavily protected cable conforming to the specifications in Table 4.8.4 (a).
Allow an extra 50 cm for routing the cable in the controller.
The maximum cable length is 30 m.

Table 4.8.4 (a) Recommended Cable (for Peripheral Device Connection)

Number of wires	Wire specifications (FANUC specifications)	Conductor		Sheath thickness (mm)	Effective outside diameter (mm)	Electrical characteristics	
		Diameter (mm)	Configuration			Conductor resistance (Ω/km)	Allowable current (A)
50	A66L-0001-0042	ϕ1.05	7/0.18 AWG24	1.5	ϕ12.5	106	1.6A
20	A66L-0001-0041	ϕ1.05	7/0.18 AWG24	1.5	ϕ10.5	106	1.6A

(2) End effector connection cable
Connect an end effector using a heavily protected cable with a movable wire conforming to the specifications in Table 4.8.4 (b).
The cable length is determined so that the cable will not interfere with the end effector and the wrist can move through its full stroke.

Table 4.8.4 (b) Recommended Cable (for End Effector Connection)

Number of wires	Wire specifications (FANUC specifications)	Conductor		Sheath thickness (mm)	Effective outside diameter (mm)	Electrical characteristics	
		Diameter (mm)	Configuration			Conductor resistance (Ω/km)	Allowable current (A)
6	A66L-0001-0143	ϕ1.1	40/0.08 AWG24	1.0	ϕ5.3	91	3.7
20	A66L-0001-0144	ϕ1.1	40/0.08 AWG24	1.0	ϕ8.6	91	2.3
24	A66L-0001-0459	ϕ0.58	40/0.08 AWG24	1.0	ϕ8.3	93	2.3

NOTE
For protection against the noise, cut part of the jacket of the connection cable to expose the shield, and fasten this part to the earth plate with the cable clamp.

4.9 CONNECTION OF HDI

4.9.1 Connecting HDI

The HDI signals are used in combination with special application software. The HDI signals cannot be used as general-purpose DIs.

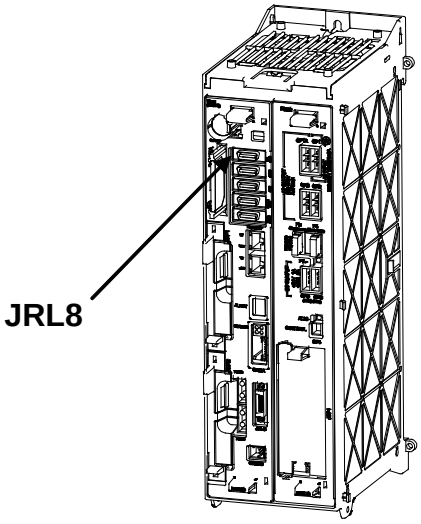

(R-30*i*B)

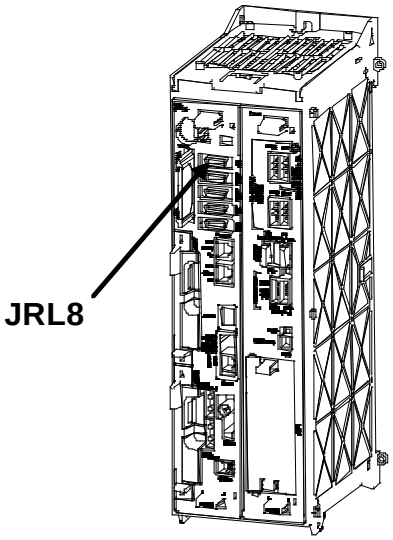

(R-30*i*B Plus)

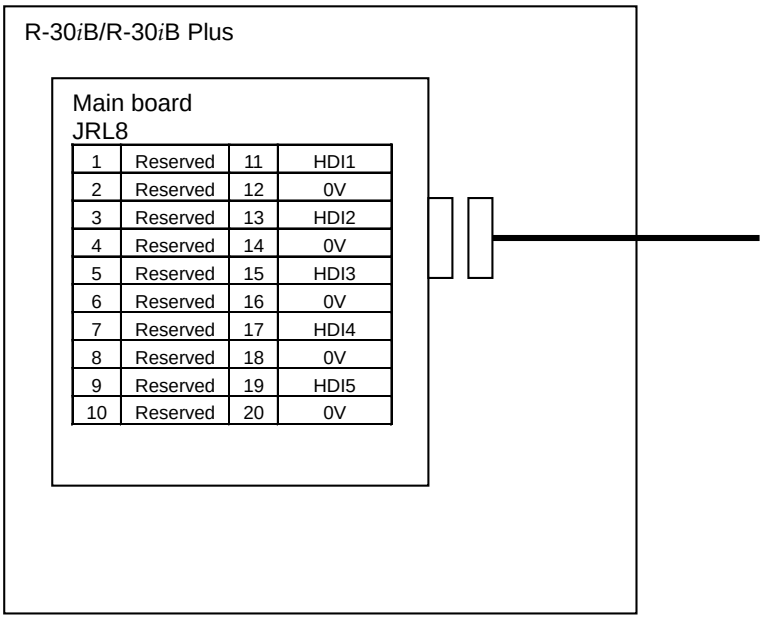

1	Reserved	11	HDI1
2	Reserved	12	0V
3	Reserved	13	HDI2
4	Reserved	14	0V
5	Reserved	15	HDI3
6	Reserved	16	0V
7	Reserved	17	HDI4
8	Reserved	18	0V
9	Reserved	19	HDI5
10	Reserved	20	0V

Cable connections

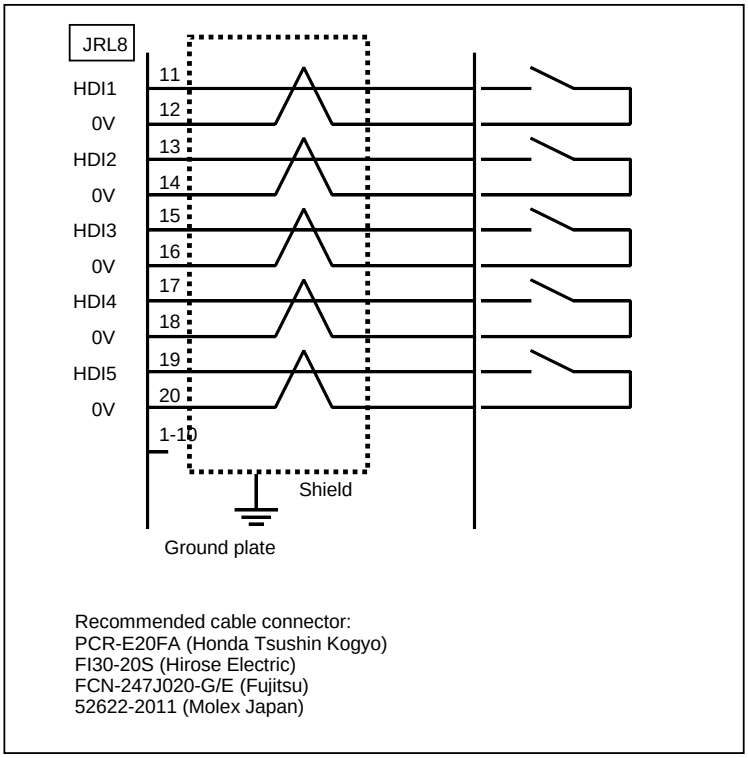

NOTE
1 Pair each signal with 0V.
2 For protection against the noise, cut part of the jacket of the connection cable to expose the shield, and fasten this part to the earth plate with the cable clamp.

4.9.2 Input Signal Rules for the High-speed Skip (HDI)

Circuit configuration

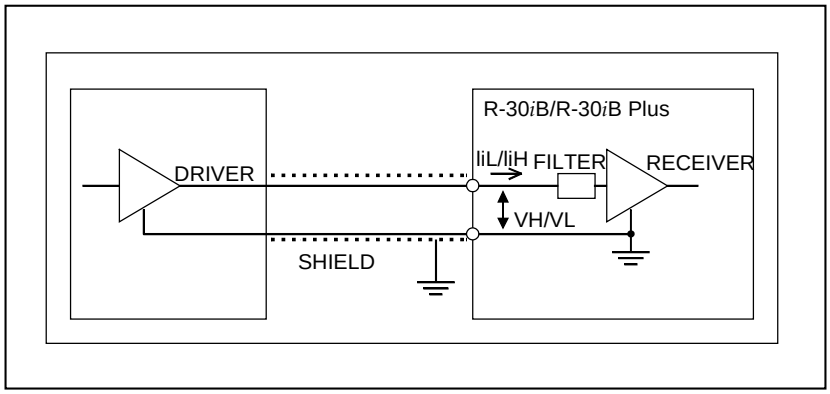

Absolute maximum rating
Input voltage range Vin: -3.6 to +10 V
Input characteristics

Unit	Symbol	Specification	Unit	Remark
High level input voltage	VH	3.6 to 11.6	V	
Low level input voltage	VL	0 to 1.0	V	

Unit	Symbol	Specification	Unit	Remark
High level input current	IiH	2 max	mA	Vin=5 V
		11 max	mA	Vin = 10 V
Low level input current	IiL	-8.0 max	mA	Vin = 0 V
Input signal pulse duration		20 min	μs	
Input signal delay or variations		20 max	μs	

NOTE
1 The plus (+) sign of IiH/IiL represents the direction of flow into the receiver. The minus (-) sign of IiH/IiL represents the direction of flow out of the receiver.
2 The high-speed skip signal is assumed to be 1 when the input voltage is at the low level and 0 when it is at the high level.

4.10 CONNECTING THE COMMUNICATION UNIT

4.10.1 RS232C Interface

4.10.1.1 Interface

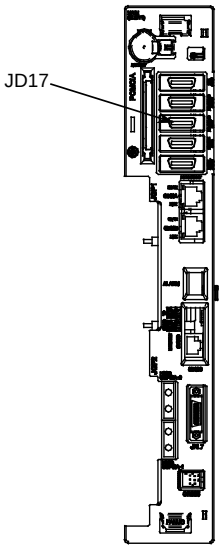

(R-30*i*B main board)

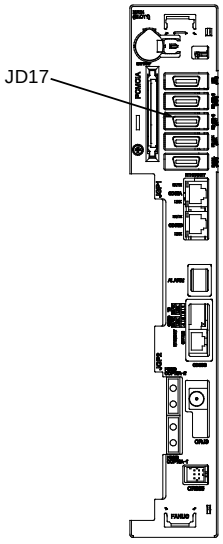

(R-30*i*B Plus main board)

JD17

1	RD	11	SD
2	SG	12	SG
3	DR	13	ER
4	SG	14	SG
5	CS	15	RS
6	SG	16	SG
7		17	
8		18	
9		19	+24V
10	+24V	20	

Honda Tsushin Kogyo
CONNECTOR: PCR-E20FS
COVER: PCR-V20LA, or compatible connector

NOTE
1 +24 V can be used as the power supply for FANUC RS232C equipment.
2 Do not connect anything to those pins for which signal names are not indicated.

4.10.1.2 RS232C interface signals

Generally signals as follows are used in RS232C interface.

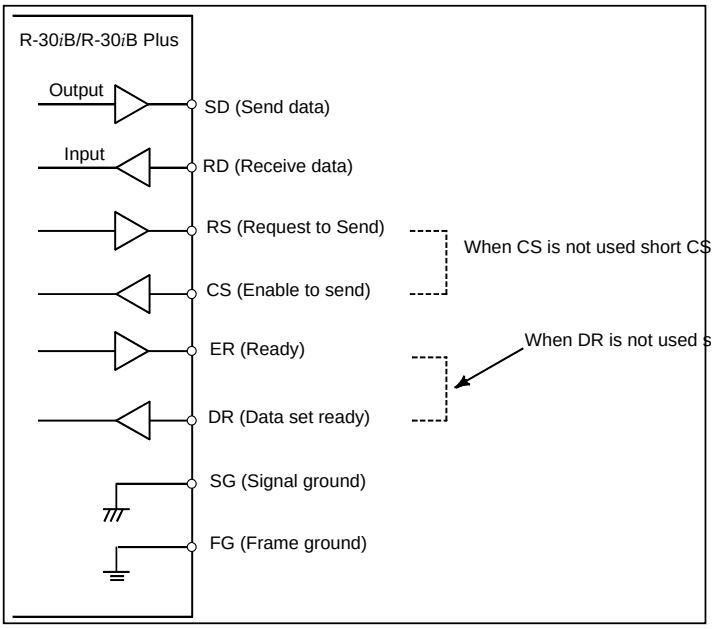

Fig.4.10.1.2 RS232C interface

4.10.1.3 Connection between RS232C interface and I/O device

The figure below shows a connection with the handshaking of the ER/DR, RS/CS signals.

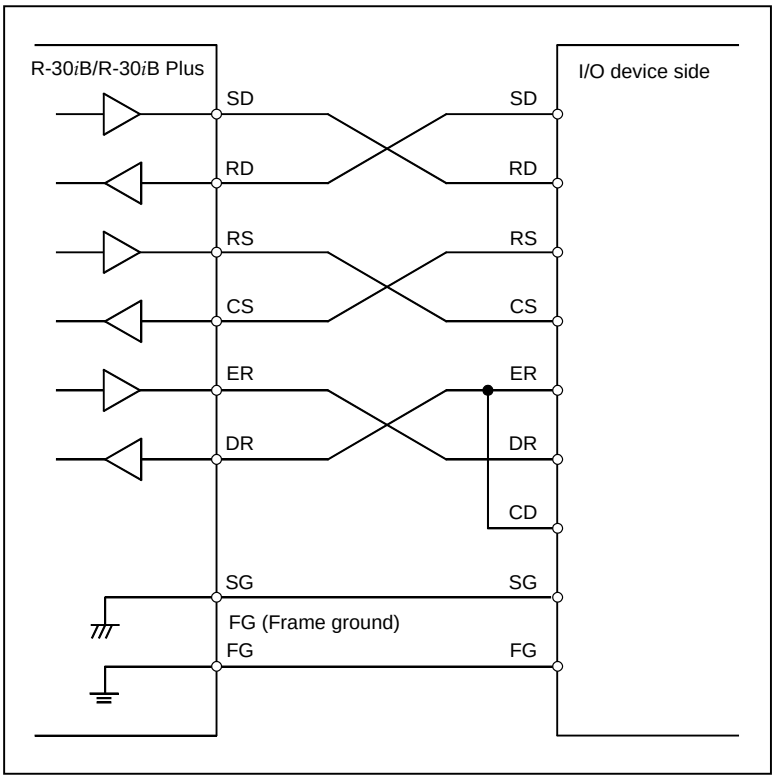

- The figure below shows a connection without the handshaking of the RS/CS, ER/DR signals.

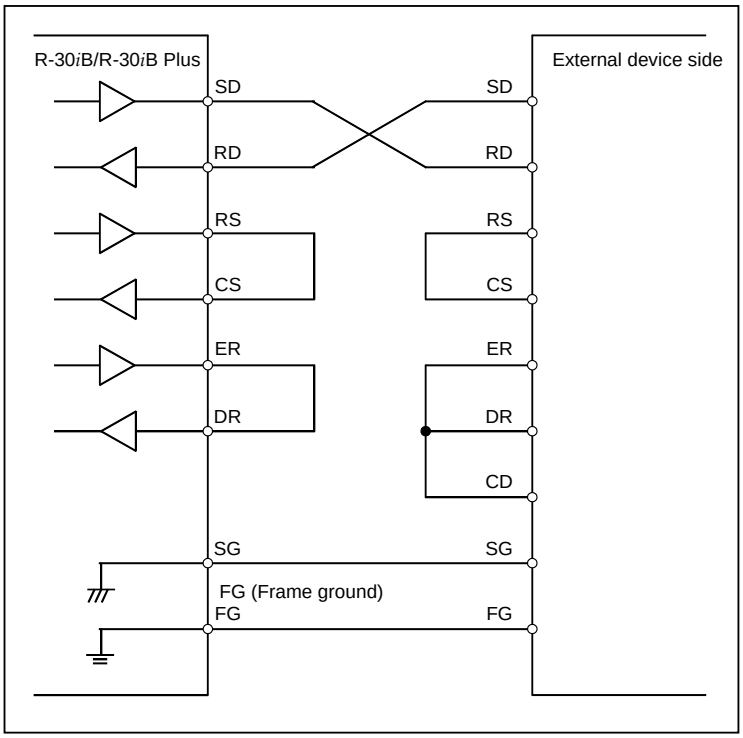

Cable connection

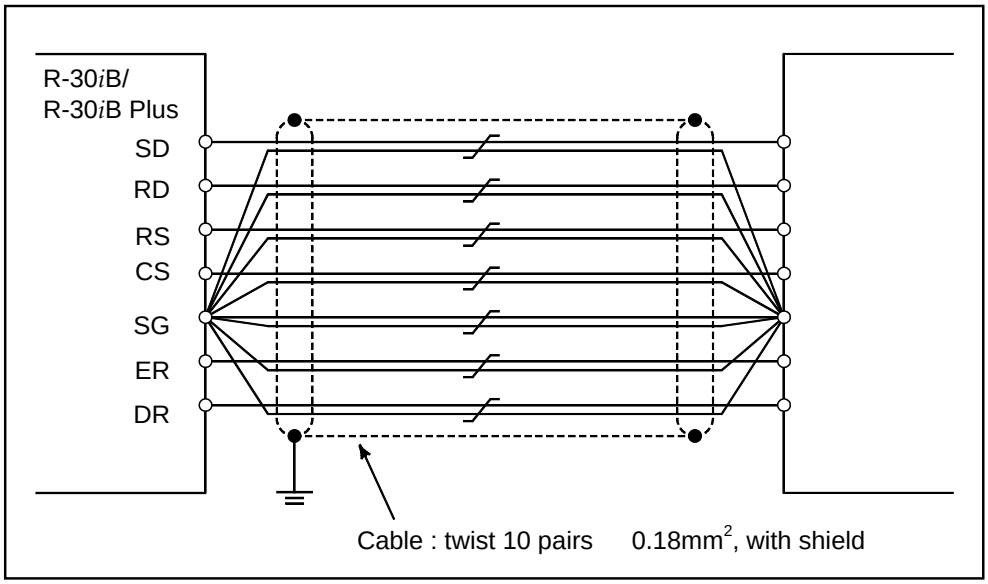

NOTE

1 Pair each signal with SG.
2 For protection against the noise, cut part of the jacket of the connection cable to expose the shield, and fasten this part to the earth plate with the cable clamp.

4.10.2 Ethernet Interface

This section describes information relating to the physical Ethernet connection.

> ⚠ **CAUTION**
> 1 Before connecting or disconnecting the Ethernet cable, make sure that the power to the robot controller is turned off.
> 2 Please inquire of each manufacturer (of hub, transceiver, cable etc.) about the construction of the network or the condition in which the equipment is being used. When configuring your network, you must take other sources of electrical noise into consideration to prevent your network from being influenced by electrical noise. Make sure that network wiring is sufficiently separated from power lines and other sources of electrical noise such as motors, and ground each of the devices as necessary. In addition, high and insufficient ground impedance may cause interference during communications. After installing the robot, conduct a communications test before you actually start operating the robot.
> We cannot ensure operation that is influenced by network trouble caused by a device other than the robot controller.

4.10.2.1 Connection to Ethernet

The robot controller is provided with a 100BASE-TX and 1000BASE-T (Only R-30*i*B Plus) interface. Prepare a hub for connecting the controller to the Ethernet trunk. The following shows an example of a general connection.

To connect the control unit to the CD38C (for R-30iB Plus) Ethernet interface in a half duplex communication mode, use a hub which satisfies the following conditions:
- Supports 100BASE-TX/1000BASE-T.
- Has an auto-negotiation function.
- Supports store-and-forward switching.
- Supports flow control.

Some devices (hub, transceiver, etc.) that are needed for building a network do not come in dust-proof construction. Using such devices in an atmosphere where they are subjected to dust or oil mist will interfere with communications or damage the robot controller. Be sure to install such devices in a dust-proof cabinet.

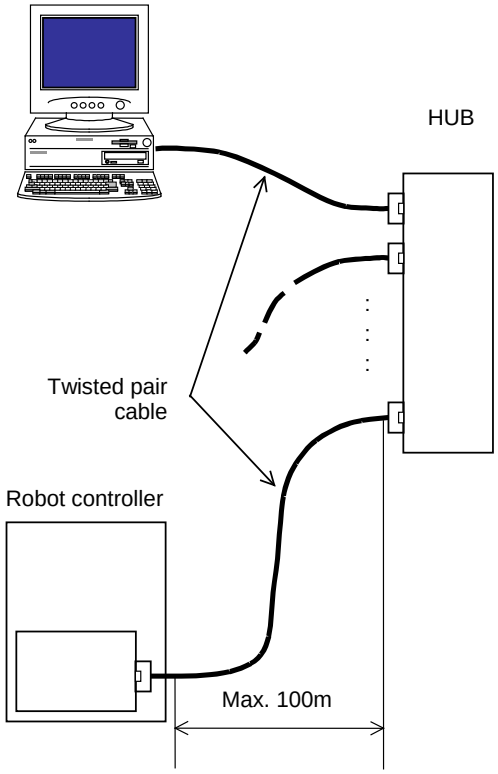

4.10.2.2 Leading out the Ethernet Cable

For this type of controller, the cable is drawn out only from the front of the controller. See the outline drawing of each type of board for the location of the connector.

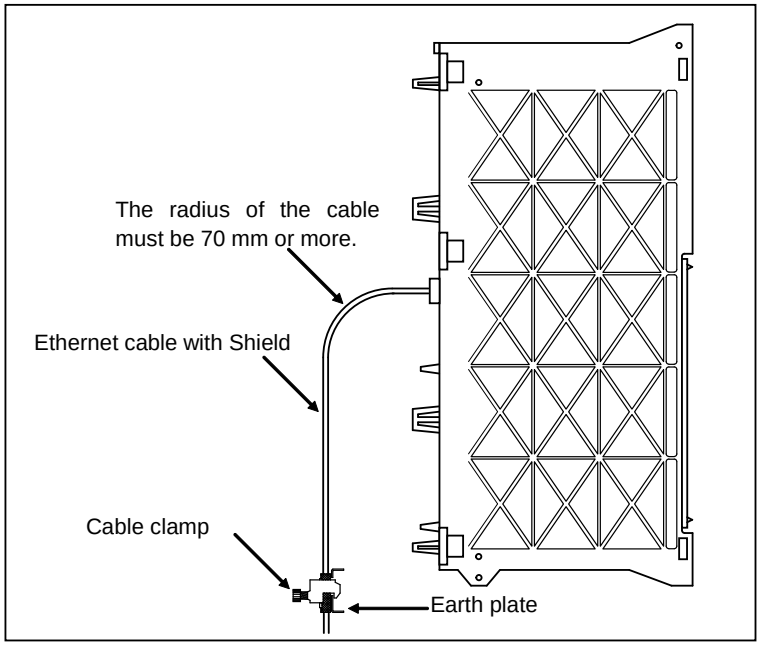

The Ethernet cable must be fastened by a cable clamp to prevent tension being applied to the modular connector (RJ-45) that connects the cable to the controller even if the Ethernet cable is pulled directly. This clamp is also used to ground the cable shield.

4.10.2.3 100BASE-TX Connector (CD38A, CD38B) / 1000BASE-T Connector (CD38C) Pin Assignments

CD38A,CD38B(R-30*i*B, R-30*i*B Plus)

Pin No.	Signal name	Description
1	TX+	Send +
2	TX-	Send -
3	RX+	Receive +
4		Not used
5		Not used
6	RX-	Receive -
7		Not used
8		Not used

CD38C(1000BASE-T, R-30*i*B Plus only)

Pin No.	Signal name	Description
1	MDI0+	Bi-directional Data 0+
2	MDI0-	Bi-directional Data 0-
3	MDI1+	Bi-directional Data 1+
4	MDI2+	Bi-directional Data 2+
5	MDI2-	Bi-directional Data 2-
6	MDI1-	Bi-directional Data 1-
7	MDI3+	Bi-directional Data 3+
8	MDI3-	Bi-directional Data 3-

4.10.2.4 Twisted-pair Cable Specification

Cable Connection

The cable used for connection between the 100BASE-TX/1000BASE-T interface, CD38, of the controller and the hub is connected as follows:

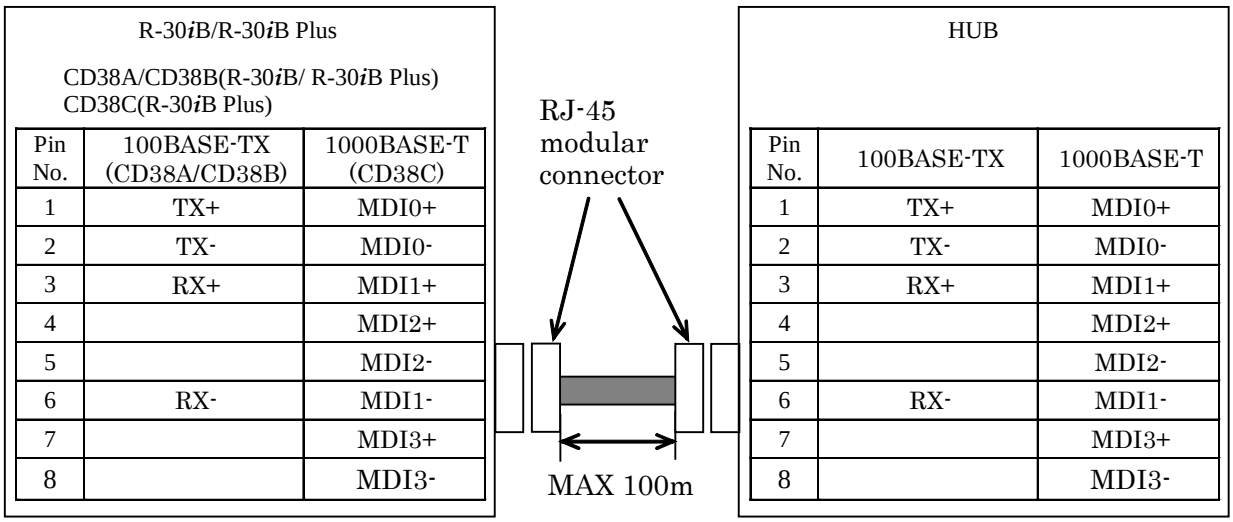

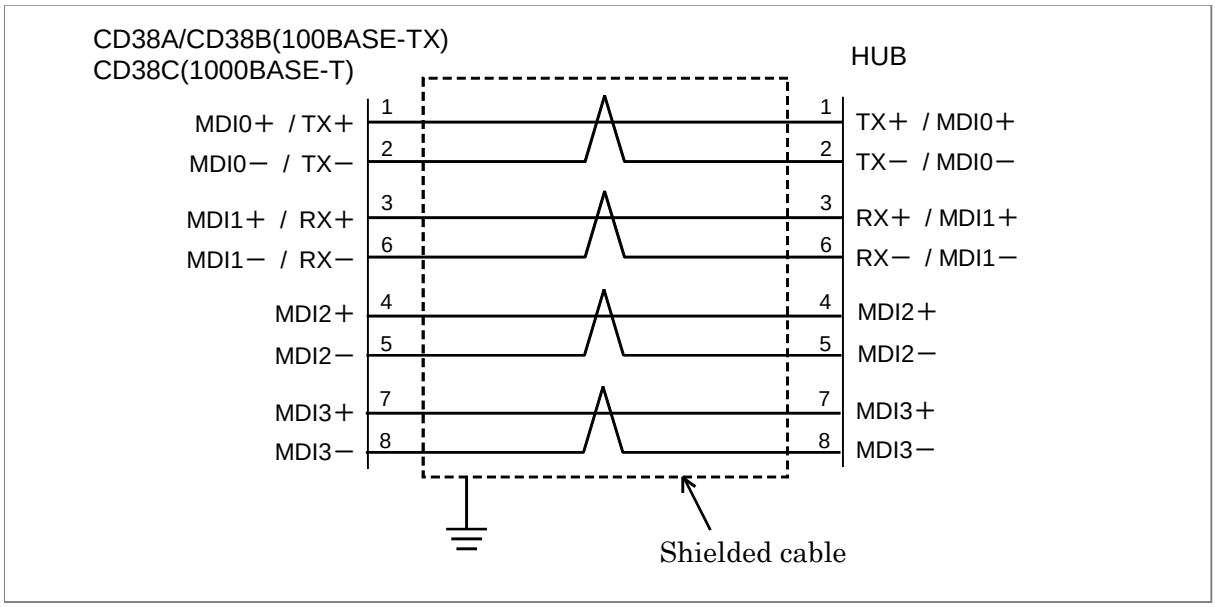

- Keep the total cable length within 100 m. (The maximum cable length of the movable cable recommended by FANUC is 40m.) Do not extend the cable more than is necessary.
- The figure above shows the cable connection when cables are crossed in the hub.
  "X" is usually indicated at the port of the hub to signify that cables are crossed in the hub.

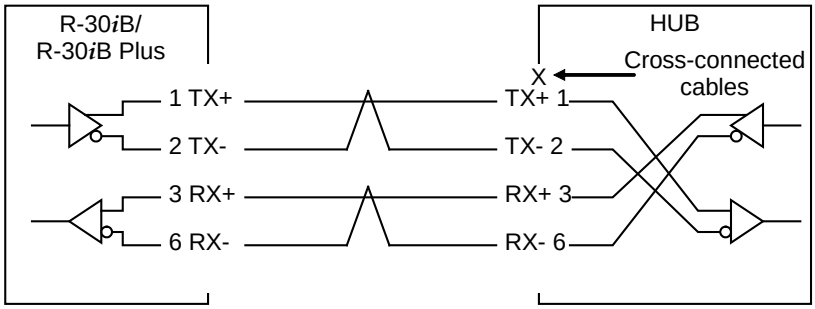

(1) Cable Materials

> ⚠ **CAUTION**
> Unshielded cable (UTP cable) is commercially available as 100BASE-TX/ 1000BASE-T twisted-pair cable: You should, however, use shielded Category 5(100BASE-TX) / 5e(1000BASE-T) twisted-pair cable (STP cable) to improve the resistance to electrical noise in an FA environment.

Recommended Cables (Non-flexible cable, 100BASE-TX)

Manufacturer	Specification	Remarks
NISSEI ELECTRIC CO., LTD.	F-4PWWWMF	Single-conductor cable

> **NOTE**
> The recommended cables cannot be connected to moving parts.

Recommended cable (for flexible parts, dedicated to FANUC)

Manufacturer	Specification	Remarks
Oki Electric Cable Co., Ltd.	AWG26 4P TPMC-C5E (S-HFR) K	CAT5e (1Gbps capable, For 1000BASE-T)
Oki Electric Cable Co., Ltd.	AWG26 4P TPMC-C5-F (SB)	CAT3, CAT5 (100Mbps capable, For 100BASE-TX)
Shinko Electric Industrial Co., Ltd.	FNC-118	CAT3, CAT5 (100Mbps capable, For 100BASE-TX)

Specification

1. Manufacture: Oki Electric Cable Co., Ltd.
   Manufacture's model number: AWG26 4P TPMC-C5E(S-HFR) K

- Electrical characteristic:
  Complying with EIA/TIA 568B.2 Category 5e.
- Structure:
  Common-shield braided cable with drain wire. The conductors of the cable are AWG26 annealed-copper strand wire, with a sheath 0.6 mm thick and an outer diameter of 6.8 mm.
- Fire resistance:
  UL1581 VW-1
- Oil resistance:
  As per Fanuc's internal standard (Equivalent to conventional oil-resistant electrical cable)
- Flexing resistance:
  Sliding: 3 millions or more sliding cycles with a bending radius of 50 mm.
  bending: 300 thousands or more bending cycles with a bending radius of 20 mm
  Twisting: 5 millions or more sliding cycles. (+/- 180degrees)
- UL style No. :
  AWM20276（80℃/30V/VW-1）

2. Manufacture: Oki Electric Cable Co., Ltd.
   Manufacture's model number: AWG26 4P TPMC-C5-F (SB)
   Manufacture: SHINKO ELECTRIC INDUSTRIES CO., LTD.
   Manufacture's model number: FNC-118

- Electric characteristics:
  Conforms to EIA/TIA 568A Category 3 and Category 5.
  From the viewpoint of attenuation performance, ensure that the length to the hub is 50 m or less.
- Structure:
  Group shielded (braided shield). A drain wire is available.
  The conductor is an AWG26 annealed copper twisted wire, with a sheath thickness of 0.8 mm and an outer diameter of 6.7 mm ±0.3 mm.
- Fire retardancy:
  UL1581 VW-1
- Oil resistance:
  Conforms to the FANUC internal standards (equivalent to the conventional oil-resistant electric cables).
- Flexing resistance:
  1,000,000 times or more with a bending radius of 50 mm (U-shaped flex test)
- UL style No. :
  AWM 20276 (80°C/30V/VW-1)

NOTE
Be sure to use the connector TM21CP-88P (03) manufactured by HIROSE ELECTRIC CO., LTD. or equivalents for this cable.

Cable assembly
Oki Electric Cable Co., Ltd. can also supply the cable assembly mentioned above.
Contact Oki Electric directly to determine the specifications (length, factory test, packing, and so forth) for purchase.

(2) Connector Specification

Use an 8-pin modular connector (RJ-45) with the twisted-pair cable for the Ethernet connection. The following connectors or equivalents must be used.

Flex	Specification	Manufacturer	Remarks
AWG26 4P TPMC-C5-F (SB) AWG26 4P TPMC-C5E (S-HFR) K, or FNC-118	TM21CP-88P (03)	HIROSE ELECTRIC CO., LTD.	Note

NOTE
Information about TM21CP-88P (03):
Connector (standard product of the manufacturer)
Drawing number: A63L-0001-0823#P
Manufacturer: HIROSE ELECTRIC CO., LTD.
Manufacturer type number: TM21CP-88P (03)
Conforms to EIA/TIA 568B.2 Category 5e.
For assembly with a cable, contact HIROSE ELECTRIC CO., LTD. directly.
(From HIROSE ELECTRIC CO., LTD., "TM21CP-88P (03) Connection Procedure Manual (Technical Specification No. ATAD-E2367)" is available as a technical document.)

4.10.2.5 Electrical Noise Countermeasures

Clamping and Shielding Cables

Clamp an Ethernet twisted pair cable according to the method described below, as with cables that need to be shielded. Clamping cables provides support and shielding and is extremely important to the safe operation of the system. Never overlook cable clamping.
Peel off part of the jacket as shown in the figure to expose the outer coating of the shield, and press this outer coating against the earth plate with the cable clamp.
The machine manufacturer must prepare the ground plate and install it as follows:

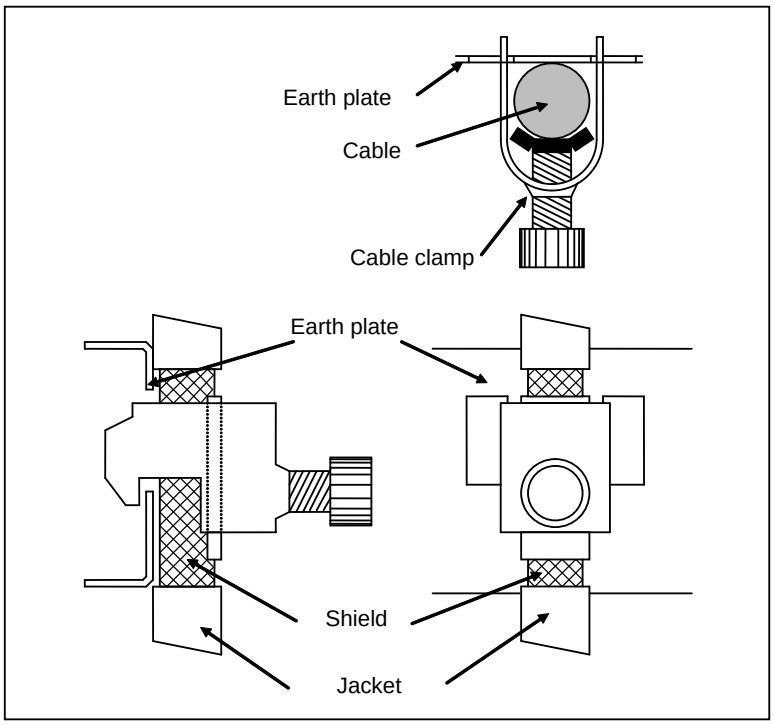

NOTE
To ensure the safe operation of the system, clamp and shield the cables.

NOTE
1 To secure fast response, FL-net communication is not provided with a retransmission process at intervals of several seconds, unlike normal Ethernet communication. It is, therefore, necessary to provide more noise resistance than that provided by general Ethernet wiring work.
2 After the laying of cables, conduct satisfactory communication tests not only before system operation but after system operation from the viewpoint of noise prevention measures.

Cable route

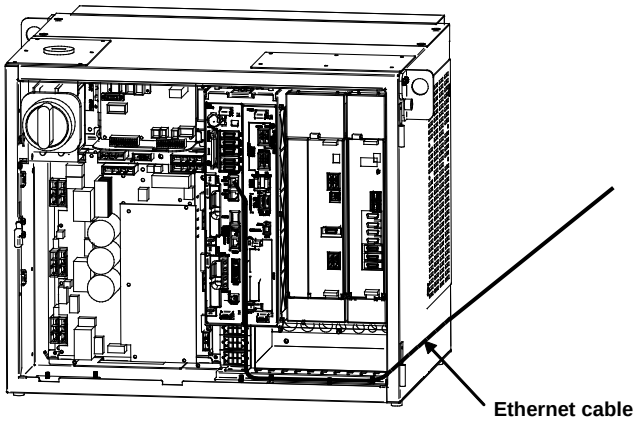

(A-cabinet)

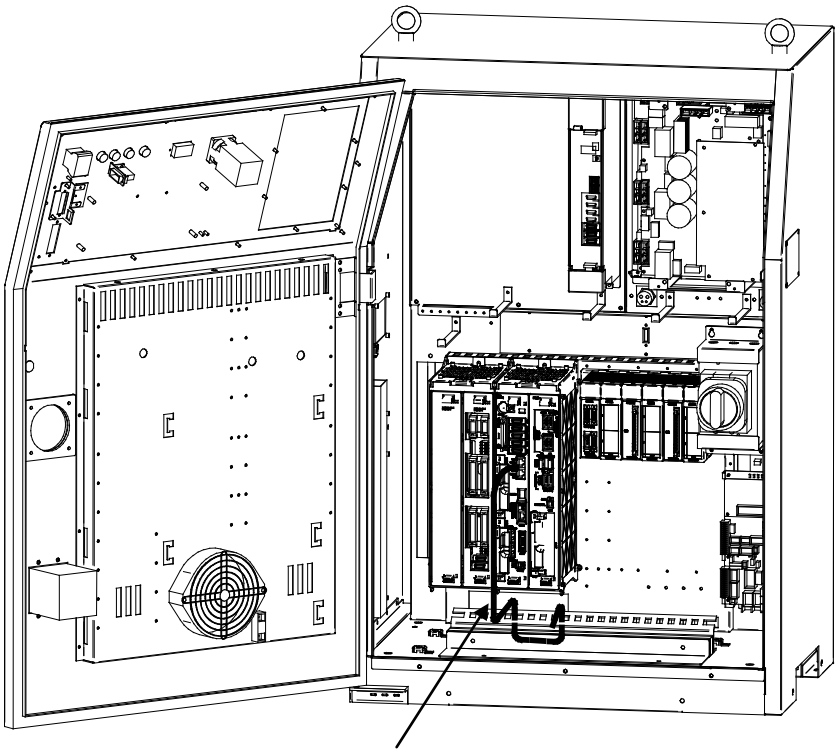

(B-cabinet)

Grounding the Network

Even if the grounding condition on the machine side is satisfied, the communication line can pick up noise from the machine, depending on the machine installation condition and environment, thus resulting in a communication error. To protect against such noise, the machine should be separated and insulated from the Ethernet trunk cable and personal computer. Examples of connection are given below.

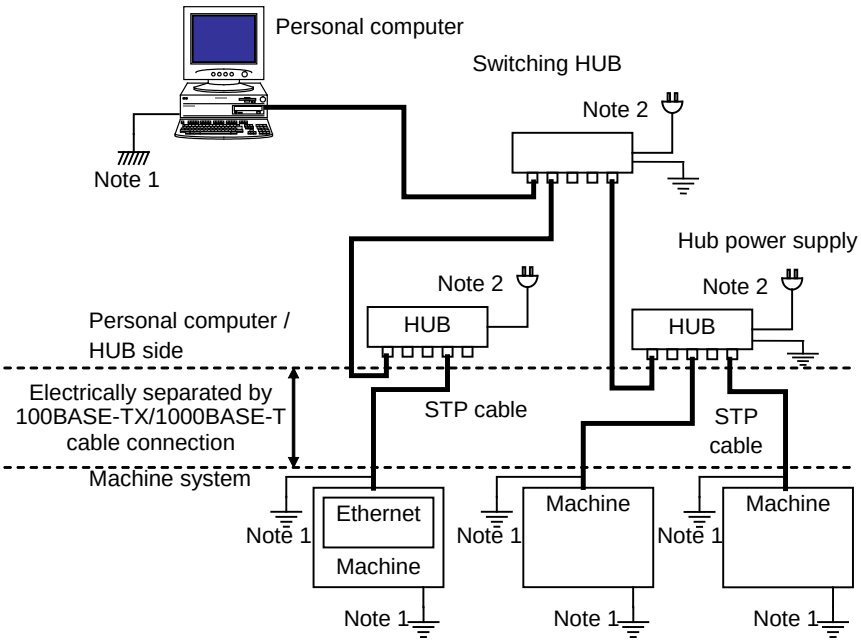

Large-Scale Network

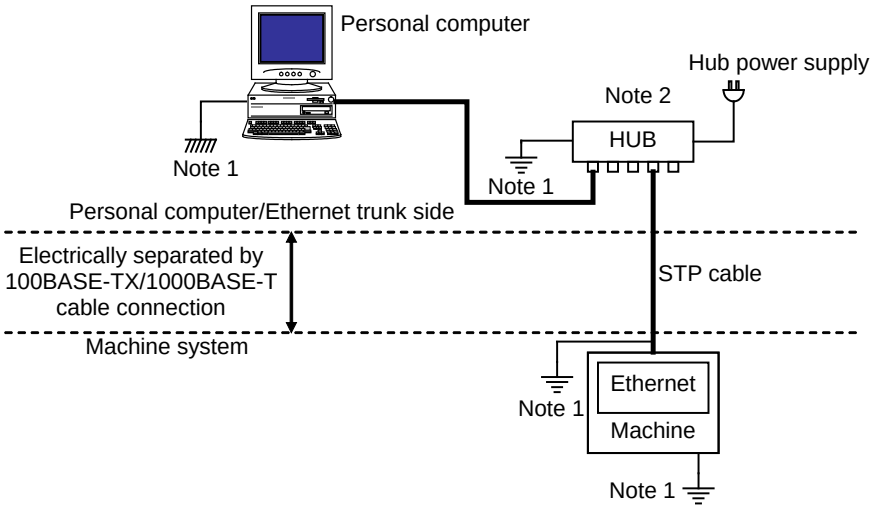

Small-Scale Network

NOTE

1 The ground between PC/HUB side and machine system side must be separated. If it is impossible to separate the ground because there is only one grounding point, connect the ground cable for each system to the grounding point independently. (See figure below.)
The resistance for grounding must be less than 100-ohm (Class D). The thickness of the ground cable is the same as the thickness of AC power cable or more. At least thickness of 5.5mm^2 is necessary.

2 Note that the number of allowable hub-to-hub connections depends on the type of hub.

3 There is possibility that noise makes the obstacle of communication even if the ground is separated using the 100BASE-TX/1000BASE-T. In the case of using the FAST Ethernet/FAST Data Server under the worst environment, please separate between the PC/Trunk line side and machine system side completely using the 100BASE-FX/1000BASE-SX/LX (Optical fiber media).

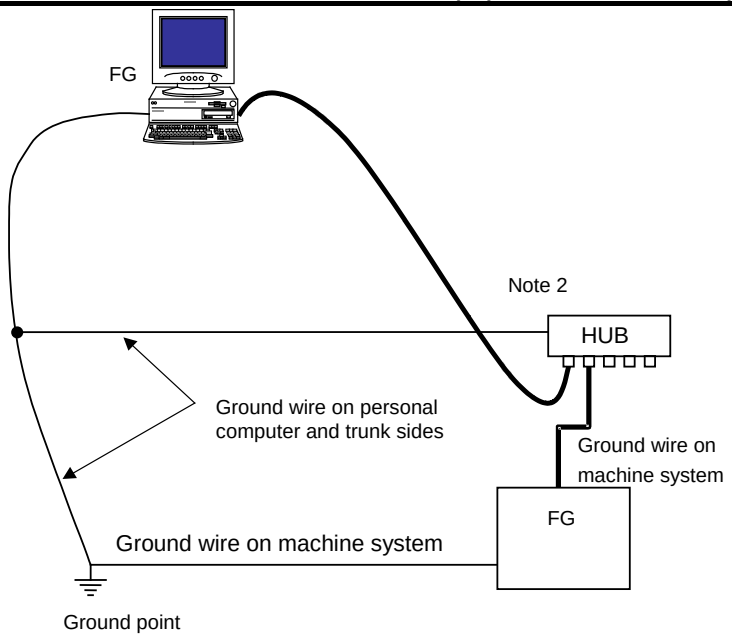

Wiring on a single ground point

4.10.2.6 Check Items at Installation

The following table lists check items at installation.

Check item		Description	Check
Ethernet cable			
	Type	Use cables which satisfies all the following conditions:	
		1) With shielding	
		2) Twisted-pair cable	
		3) Category 5	
	Length	The cable length shall be within 100 m (50 m (100BASE-TX) or 40m (1000BASE-T) for a movable cable recommended by FANUC).	
	Connection	For a twisted-pair cable of 100BASE-TX, the following pins shall be paired:	
		1) Pin No. 1 (TX+) – pin No. 2 (TX-)	
		2) Pin No. 3 (RX+) – pin No. 6 (RX-)	
		For a twisted-pair cable of 1000BASE-T, the following pins shall be paired:	
		1) Pin No. 1 (MDI0+) – pin No. 2 (MDI0+)	
		2) Pin No. 3 (MDI1+) – pin No. 6 (MDI1+)	
		3) Pin No. 4 (MDI2+) – pin No. 5 (MDI2+)	
		4) Pin No. 7 (MDI3+) – pin No. 8 (MDI3+)	
	Separation	The Ethernet cables shall be bound separately from the following cables or covered with an electromagnetic shield(Note) :	
		1) Group A: AC power lines, power lines for motors, and others	
		2) Group B: Current DC (24 VDC) and others	
	Shielding	For a shielded cable, the part of which outer coating is peeled off and exposed shall be fixed to the ground plate with a clamp fixture.	
	Clamping	The ground plate shall be located as nearest to the CNC as possible (to make the cable between the ground plate and CNC hard to be affected by noise).	
	Connectors	Any cable connector shall not be pulled (to prevent poor contact of the connector).	
	Wiring	No cable shall be laid under a heavy object.	
	Bending radius	The bending radius shall be at least four times as long as the diameter of the cable.	
	For movable part	For a movable part, a cable for a movable part shall be used.	
HUB			
	Use conditions	The "cautions on use" of the hub shall be observed (A terminating resistor shall be mounted properly if required).	
	Grounding	The hub shall be grounded.	
	Cabinet	The hub shall be installed in an enclosed cabinet.	
	Vibration	The hub shall be installed so that it is not affected by vibration.	
	Bending radius	The bending radius shall be at least four times as long as the diameter of the cable.	

NOTE

Covering a group with an electromagnetic shield means that shielding is provided between groups with grounded steel plates.

4.11 CONNECTING THE SENSOR CONNECTION CABLE

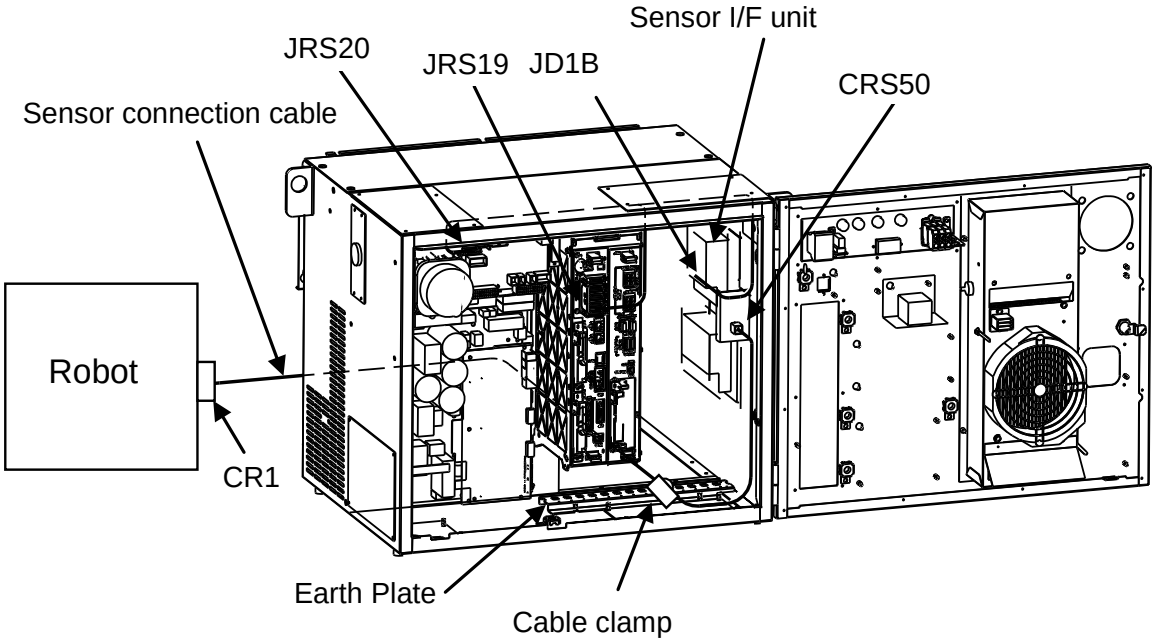

Fig. 4.11(a) Connecting the sensor connection cable

> ⚠ **CAUTION**
> Sensor connection cable should be clamped to Earth plate by cable clamp.

Table4.11(a) Specification of cable

Diameter (mm)	Weight (kg/m)	Minimum bending radius (mm)
8.5	0.115	200

5 TRANSPORTATION AND INSTALLATION

This chapter describes the transportation and installation of the controller.

5.1 TRANSPORTATION

Attach a sling to eyebolts at the top of the controller and transport it with crane.

Use cranes and slings that can handle the following loads:
Allowable load of crane: 300kg and more
Allowable load of sling: 300kg and more

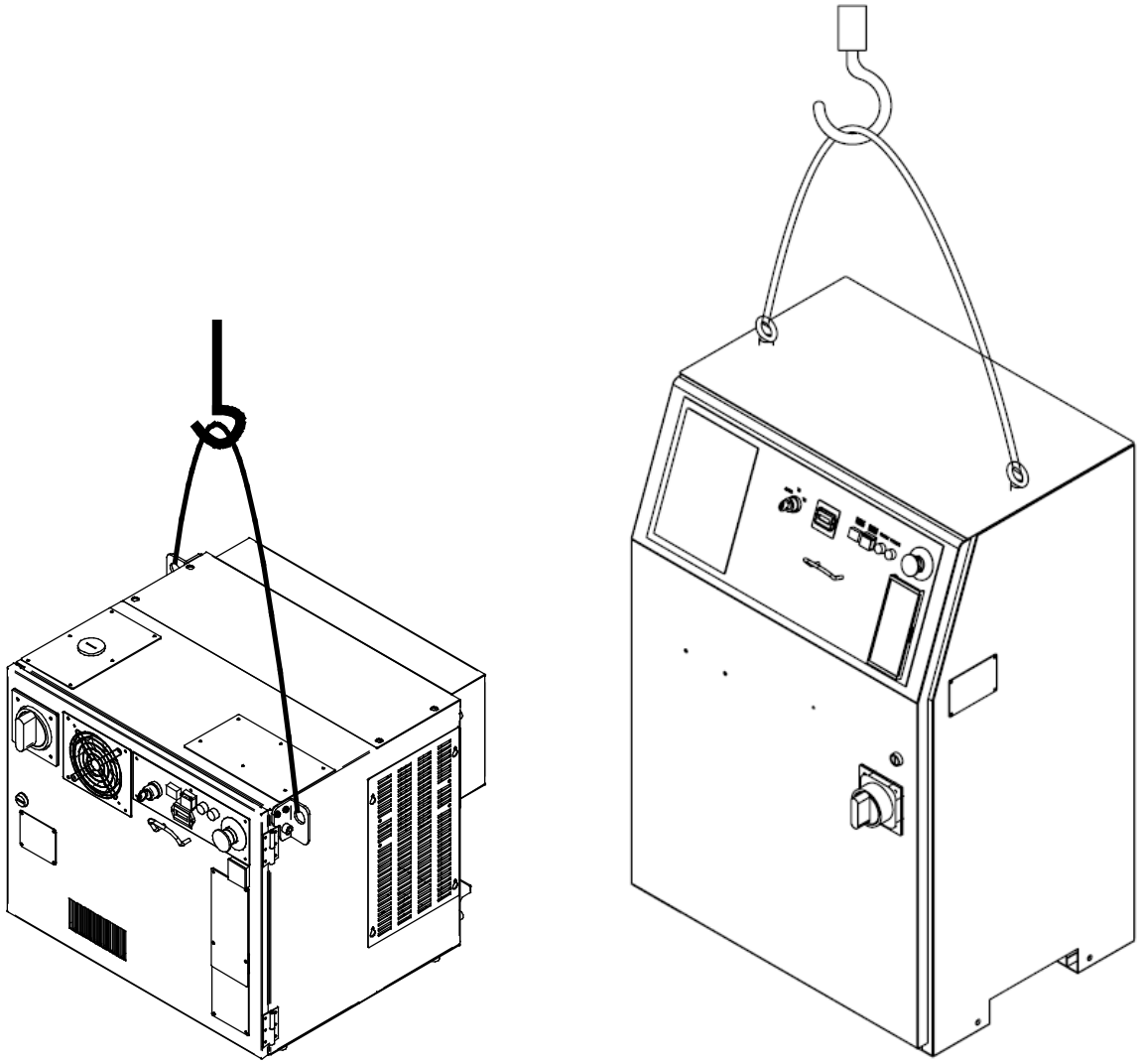

(A-cabinet) **(B-cabinet)**

Fig.5.1(a) Transportation

5.2 PACKAGE

The package method for the cabinet is as shown as below.

A-cabinet

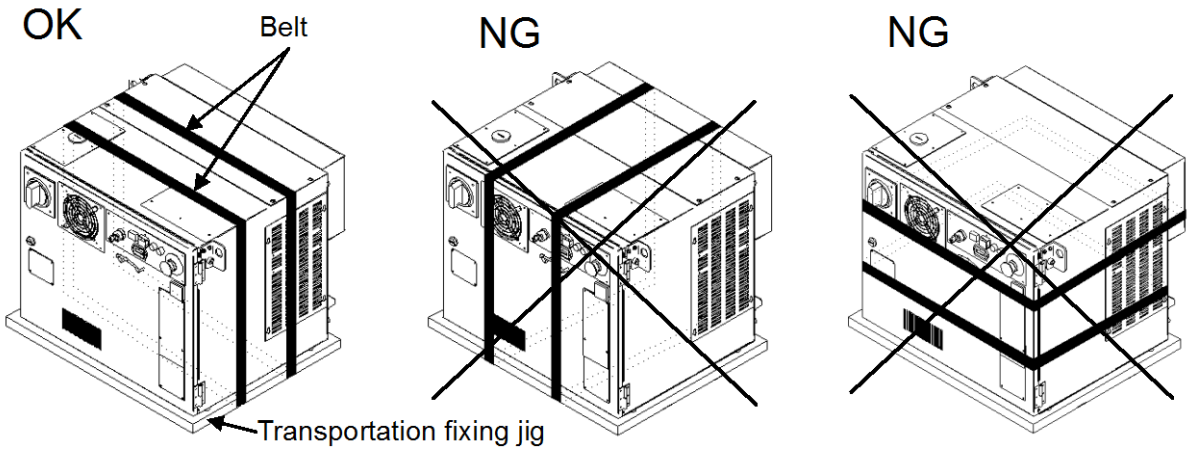

B-cabinet

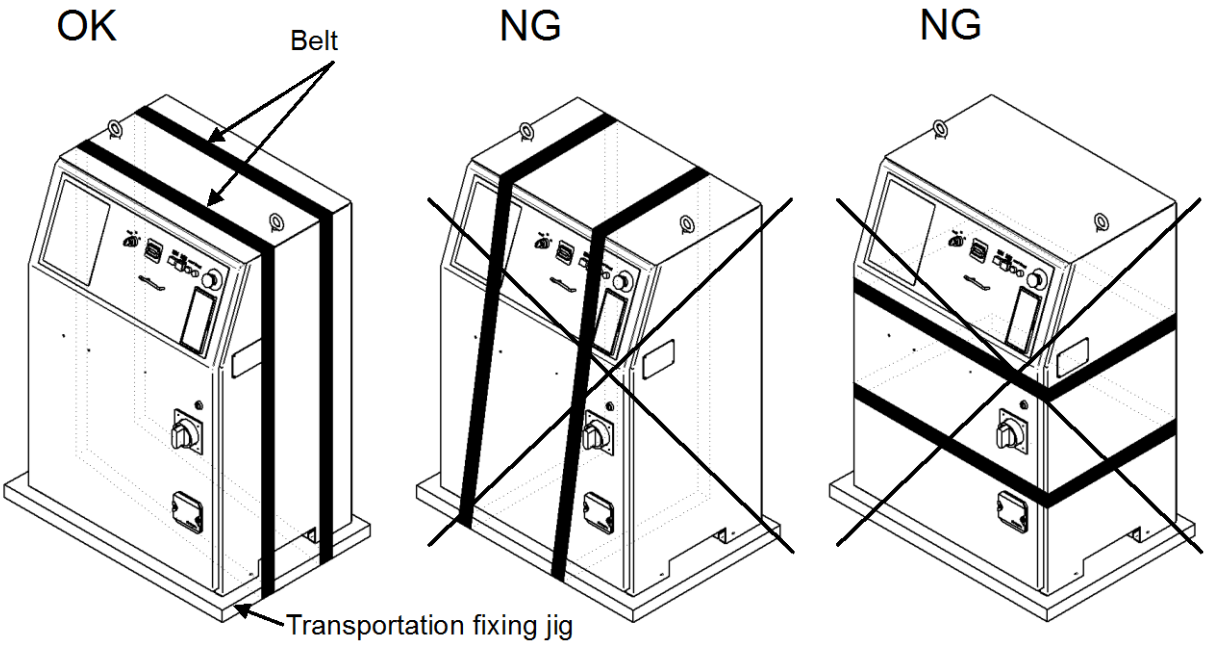

⚠ **CAUTION**
If the cabinet door is closed excessively by the belt, the gasket of the door may be crushed, and the crushed state of the gasket may not be restored even after the belt is removed, and the sealing performance of the cabinet may not be maintained during use.

5.3 INSTALLATION

5.3.1 Installation Method

Following is the installation method for cabinet.
When installing the controller, allow the space for maintenance shown in the following figure.

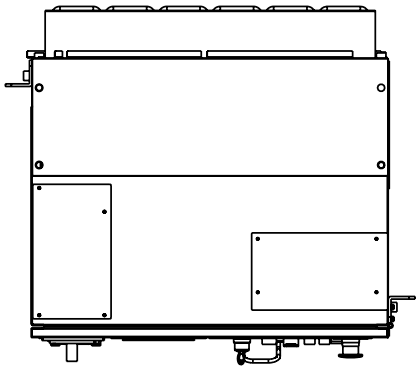

	Munsell	Color
Body	5GY3.5/0.5	Gray
Door	3.0GY8.2/0.9	White
Op. panel	N1.5	Black

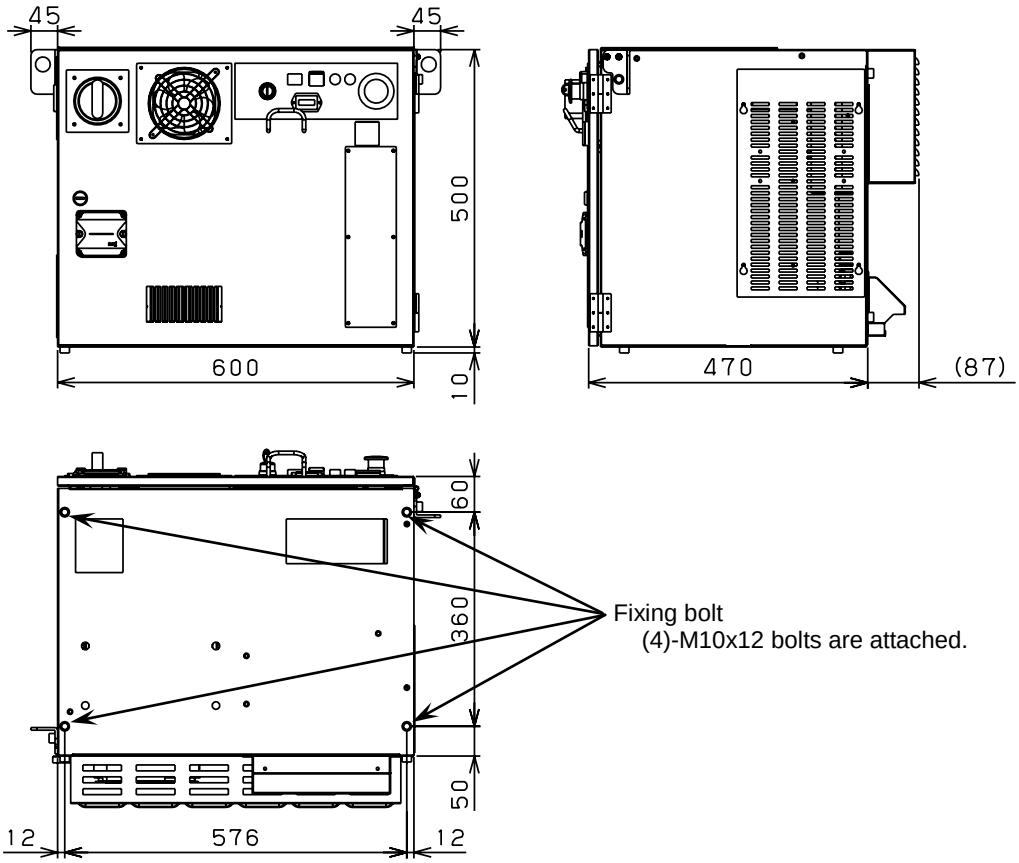

Fig.5.3.1(a1) External dimensions (A-cabinet)

> ⚠ **WARNING**
> If there is a risk of a cabinet falling, install the cabinet using fixing bolt.

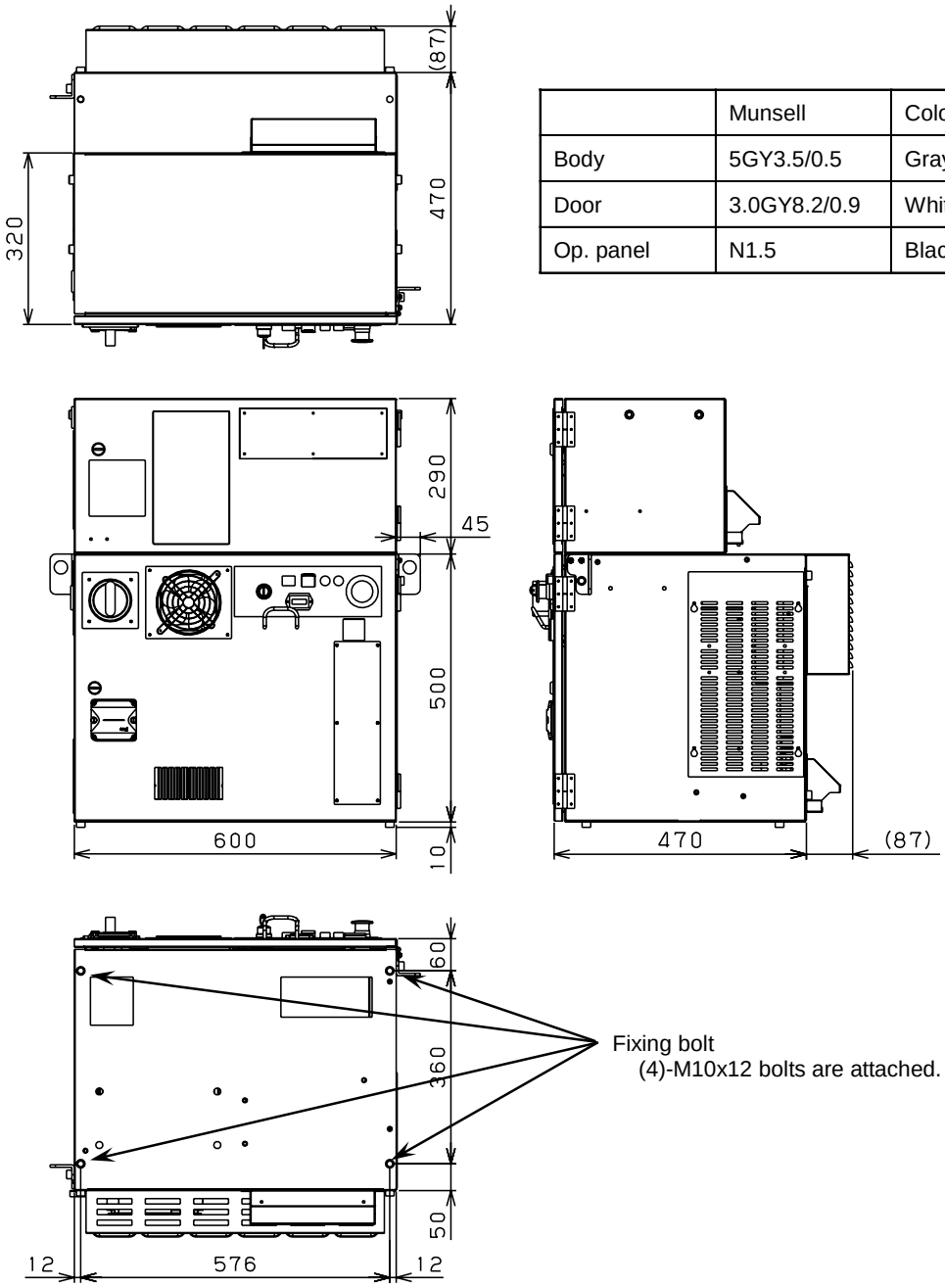

	Munsell	Color
Body	5GY3.5/0.5	Gray
Door	3.0GY8.2/0.9	White
Op. panel	N1.5	Black

Fig.5.3.1(a2) External dimensions (A-cabinet with Top box)

> ⚠ **WARNING**
> If there is a risk of a cabinet falling, install the cabinet using fixing bolt.

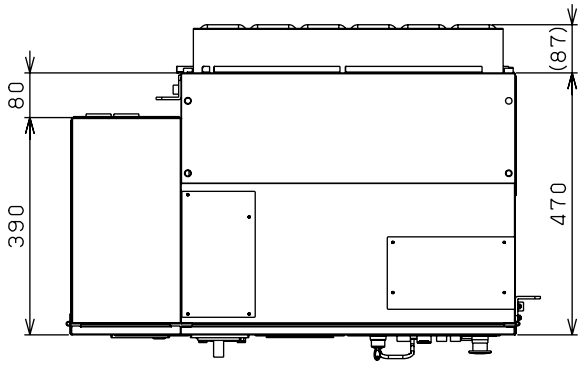

	Munsell	Color
Body	5GY3.5/0.5	Gray
Door	3.0GY8.2/0.9	White
Op. panel	N1.5	Black

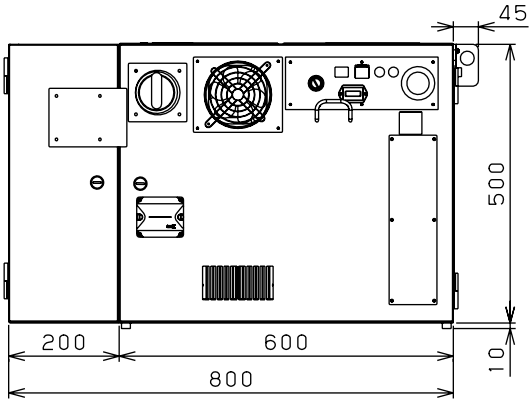

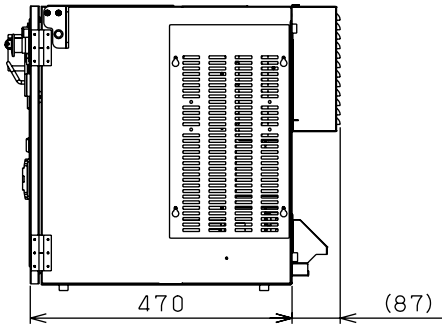

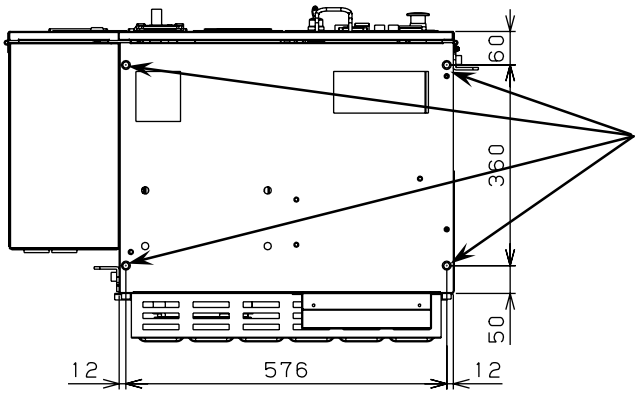

Fixing bolt
(4)-M10x12 bolts are attached.

Fig.5.3.1(a3) External dimensions (A-cabinet with Side box)

> ⚠ **WARNING**
> If there is a risk of a cabinet falling, install the cabinet using fixing bolt.

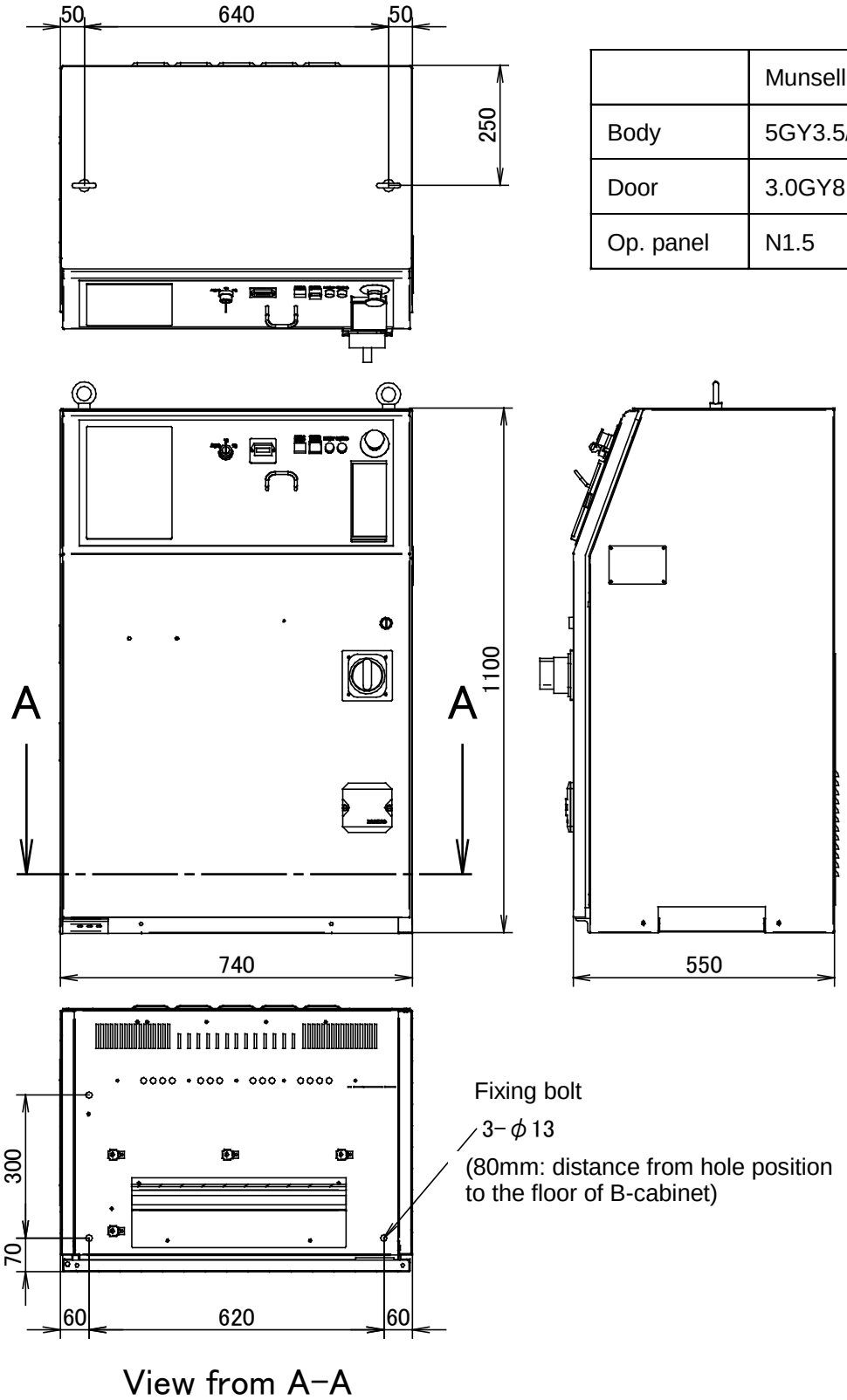

	Munsell	Color
Body	5GY3.5/0.5	Gray
Door	3.0GY8.2/0.9	White
Op. panel	N1.5	Black

Fig.5.3.1(b) External dimensions (B-cabinet)

⚠ **WARNING**

1 If there is a risk of a cabinet falling, install the cabinet using fixing bolt.
2 Do not remove the eyebolt.

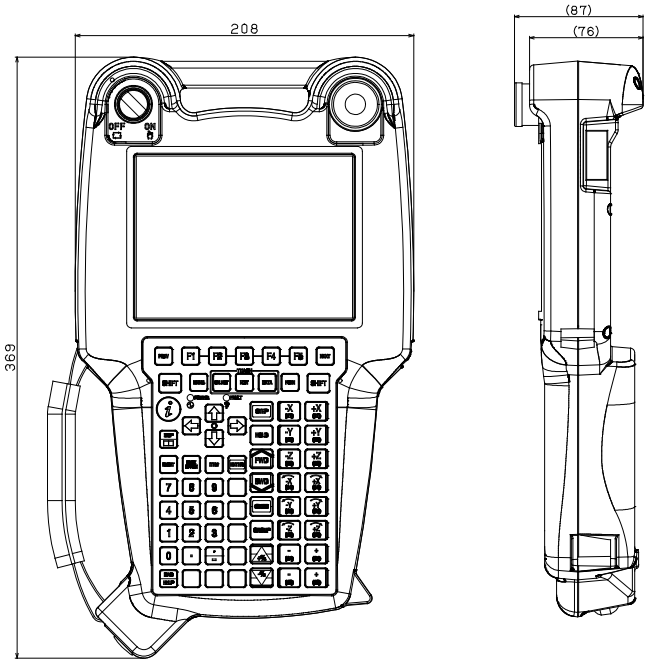

Fig.5.3.1(c) External dimensions (Teach pendant)

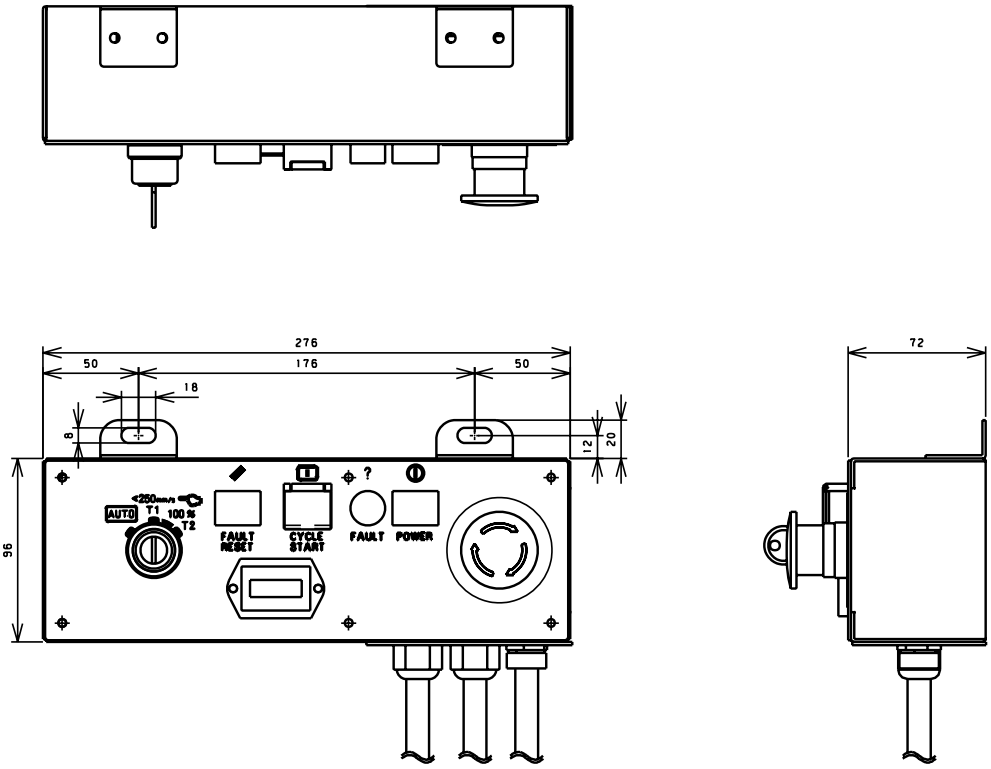

Fig.5.3.1(d) External dimensions (Switch box)

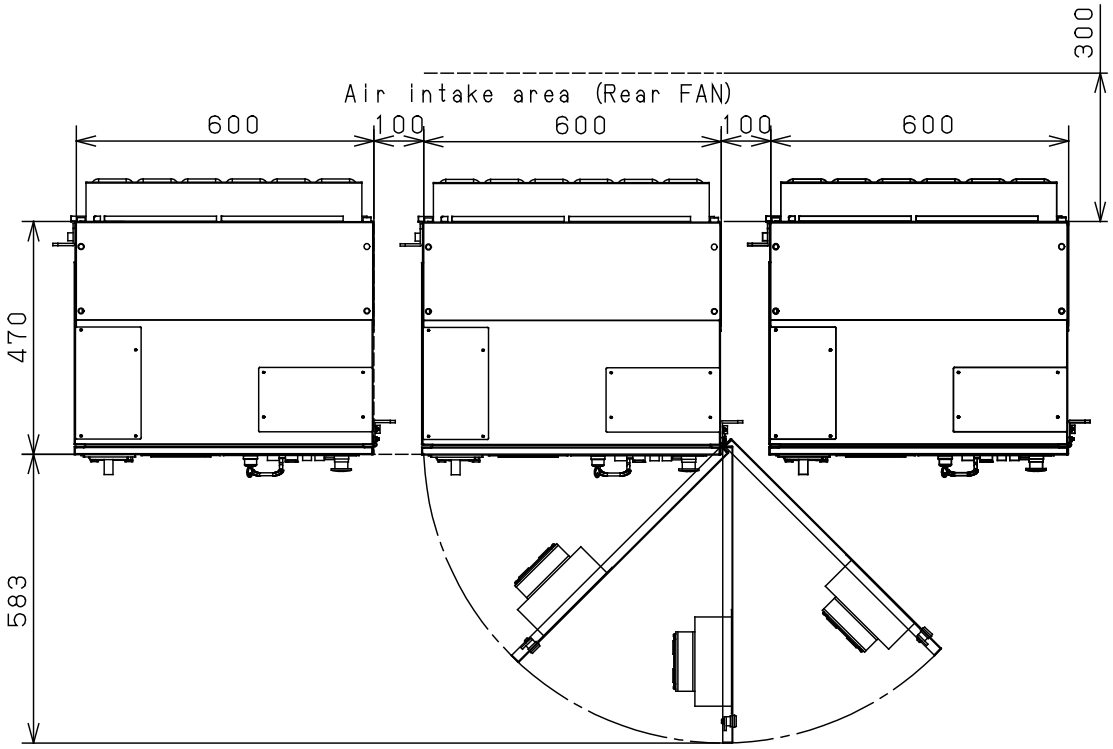

Fig.5.3.1 (e) Installation dimensions (A-cabinet)

⚠ **WARNING**

1 Keep this area for maintenance and the radiation of heat.

2 Install the controller in an open space with good ventilation. If install the controller in a sealed space, the cooling function of the controller will not work, and the controller may become hot, resulting in reliability degradation and failure.

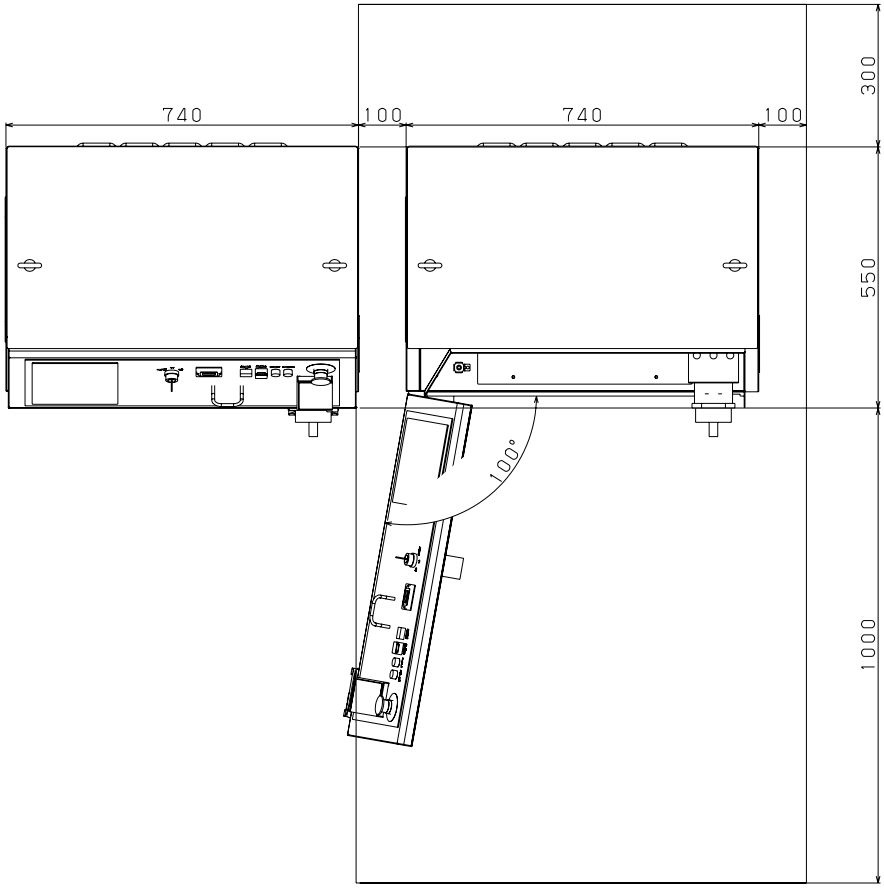

Fig.5.3.1 (f) Installation dimensions (B-cabinet)

⚠ **WARNING**

1 Keep this area for maintenance and the radiation of heat.
2 Install the controller in an open space with good ventilation. If install the controller in a sealed space, the cooling function of the controller will not work, and the controller may become hot, resulting in reliability degradation and failure.

5.3.2 Assembly at Installation

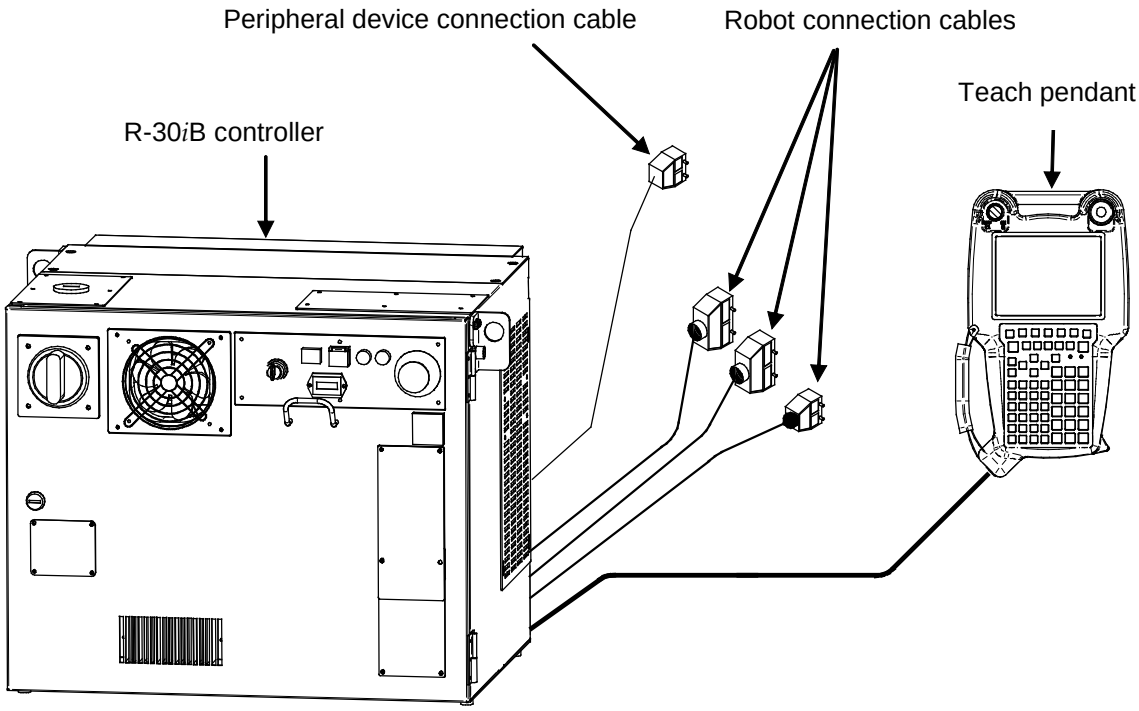

Fig.5.3.2 (a) Assemble at installation (A-cabinet)

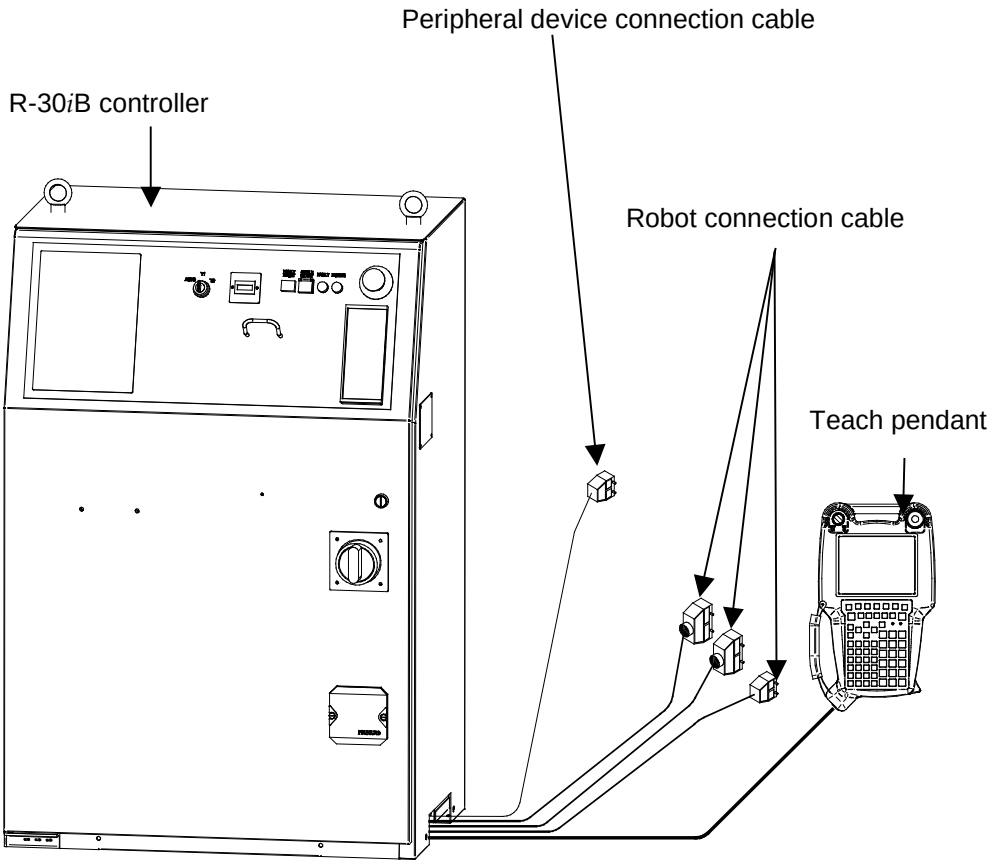

Fig.5.3.2 (b) Assemble at installation (B-cabinet)

5.4 INSTALLATION CONDITIONS

Item	Applicable model	Specification/conditions
Rated Voltage	All models	Trans. Type E:380-415, 440-500, 500-575VAC(*1) Trans. Type D:200-230, 380-400VAC 50/60Hz 3phases (*1) In case of NRTL controller with UL/CSA breaker (600V Rating), 500-575VAC tap can be used.
Tolerant fluctuation	All models	Tolerant voltage fluctuation: +10% -15% Tolerant frequency fluctuation: ±1Hz
Input power source capacity	M-900*i*A/400L/600, M-900*i*B/400L/700	18kVA
	M-900*i*A/200P, M-2000*i*A	30kVA(15kVA per cabinet)
	R-1000*i*A/120F-7B/130F, R-2000*i*B/100P/200T/220U/220US, R-2000*i*C/100P/190U/210L/210WE/220U/270F/270R, M-410*i*B, M-900*i*A/260L/350/150P, M-410*i*C, M-900*i*B/280/280L/330L/360	15kVA
	R-2000*i*B (except /200T/220U/220US), R-2000*i*C (except 210L/220U/270F/270R), R-2000*i*D/100FH/165FH/210FH, R-1000*i*A (except /120F-7B/130F), M-420*i*A, M-421*i*A, M-710*i*C, M-2*i*A, M-3*i*A	12kVA
	F-200*i*B	5kVA
	M-430*i*A/2PH/4FH/2P	3.5kVA
	ARC Mate 120*i*C, ARC Mate 100*i*D, ARC Mate120*i*D, M-20*i*A, M-20*i*B, M-20*i*D, CR-35*i*A	3kVA
	ARC Mate 100*i*C, M-10*i*A, M-10*i*D, CR-15*i*A	2kVA
	CR-4*i*A, CR-7*i*A, CR-14*i*A, LR Mate 200*i*D	1.2kVA
Average power consumption	M-900*i*A/400L/600/150P, M-900*i*B/700/400L	5kW
	M-900*i*A/200P	10kW
	M-2000*i*A	8kW
	R-1000iA/120F-7B/130F, R-2000*i*B/200T/220U/220US, R-2000*i*C/100P/190U/210L/210WE/220U/270F/270R, M-410*i*B, M-900*i*A/260L/350, M-410*i*C, M-900*i*B/280/280L/330L/360	3kW
	R-2000*i*B (except /200T/220U/220US), R-2000*i*C(except /210L/220U/270F/270R), R-2000*i*D/100FH/165FH/210FH, R-1000*i*A (except /120F-7B/130F), M-420*i*A, M-421*i*A, M-710*i*C, M-2*i*A, M-3*i*A	2.5kW
	ARC Mate 100*i*C, ARC Mate 120*i*C, ARC Mate 100*i*D, ARC Mate 120*i*D, M-10*i*A, M-20*i*A, M-20*i*B, M-10*i*D, M-20*i*D, M-430*i*A/2PH/4FH/2P, F-200*i*B, CR-15*i*A, CR-35*i*A	1kW
	CR-4*i*A, CR-7*i*A, CR-14*i*A, LR Mate 200*i*D	0.5kW

Item	Applicable model		Specification/conditions
Permissible ambient temperature	All models		During operation 0°C to 45°C For transportation/storage -20°C to 60°C Temperature change 0.3°C/minute or less
Permissible ambient humidity	All models		Normal: 75%RH or less, no condensation Short period(less than 1 month): 95%RH or less, no condensation
Atmosphere	All models		An additional protective provision is necessary if the machine is installed in an environment in which there are relatively large amounts of contaminants (dust, cutting oil, organic solvent, corrosive gas, silicone mold release agent, phosphorus compounds (insecticides etc.), alkaline cleaner, and/of salt).
Overvoltage category /Pollution degree	All models		Overvoltage categoryⅢ, Pollution degree 3, IEC60664-1 and IEC/EN/UL61010-1
Vibration acceleration	All models		4.9m/s^2 (0.5G) or less. When using the controller in a location subject to serious vibration, consult with your FANUC sales representative.
Altitude	All models		Operating:Up to 1,000m above sea level Non-operating:Up to 12,000m above sea level
Ionized and non-ionized radiation	All models		A shielding provision is necessary if the machine is installed in an environment in which it is exposed to radiation (microwave, ultraviolet rays, laser beams, and/or X-rays).
Mass of controller (In case of 2 cabinet configuration, this means mass of each cabinet)	A-cabinet	All models (Except for following models)	120kg
		R-1000*i*A/120F-7B/130F, R-2000*i*B/200T/220U/ 220US, R-2000*i*C/100P/ 190U/210L/210WE/220U/ 270F/270R, M-900*i*A, M-900*i*B, M-410*i*B, M-410*i*C	140kg
	B-cabinet	All models (Except below models)	180kg
		R-1000*i*A/120F-7B/130F, R-2000*i*B/200T/220U/ 220US, R-2000*i*C/100P/ 190U/210L/210WE/220U/ 270F/270R, M-900*i*A, M-900*i*B, M-410*i*B, M-410*i*C	200kg
Degree of protection	A-cabinet		IP54
	B-cabinet		
	Teach pendant		

NOTE

The power rating indicated above is sufficient as the continuous rating. However, when the robot is rapidly accelerating, the instantaneous requirement may increase to several times of the continuous rating.

If the acceleration/deceleration override (ACC) greater than 100% is set in the robot program, the extreme current may flow to the primary power voltage instantaneously and the input voltage of robot controller will drop depending on the equipment power capacity.

In this case, if the supply voltage is decreased 10% or more compared to the operating guaranteed voltage, power supply alarm, Move error excess alarm, DCLV alarm of servo amplifier may occur.

5.5 CAUTION ON EMC (ELECTROMAGNETIC COMPATIBILITY)

⚠CAUTION

In case of basic controller

This equipment generates, uses, and can radiate radiofrequency energy. Operation of the equipment in a residential area is likely to cause EMC (electromagnetic compatibility) interference, in which case the user, at his own expense, will be required to take whatever measure may be required to correct the interference.

⚠CAUTION

In case of NRTL controller

This equipment generates, uses, and can radiate radiofrequency energy and if not installed and used in accordance with the instruction manual, may cause interference to radio communications. As temporarily permitted by regulation, it has not been tested for compliance with the limits for Class A computing devices pursuant to subpart J of Part 15 of FCC Rules, which are designed to provide reasonable protection against such interference. Operation of the equipment in a residential area is likely to cause interference, in which case the user, at his own expense, will be required to take whatever measure may be required to correct the interference.

⚠CAUTION
In case of CE controller or CE/NRTL controller

R-30*i*B/R-30*i*B Plus controller is a group 1, class A product according to IEC55011.
This means that this product does not generate and/or use intentionally radio-frequency energy, in the form of electromagnetic radiation, inductive and/or capacitive coupling, for the treatment of material or inspection / analysis purpose and that it is suitable for use in all establishments other than domestic and those directly connected to a low voltage power supply network which supplies buildings used for domestic purposes.
There may be potential difficulties in ensuring electromagnetic compatibility in environments other than industrial, due to conducted as well as radiated disturbances.
This product must not be used in residential areas.
This product may cause interference if used in residential areas. Such use must be avoided unless the user takes special measures to reduce electromagnetic emissions to prevent interference to the reception of radio and television broadcasts.

5.6 ADJUSTMENT AND CHECKS AT INSTALLATION

Adjust the robot according to the following procedure at installation.

No.	Description
1	Visually check the inside and outside of the controller.
2	Check the screw terminals connections for proper connection.
3	Check that the connectors and printed circuit boards are firmly connected.
4	Check transformer tap setting. (See Section 6.2 in MAINTENANCE)
5	Turn the breaker off and connect the input power cable.
6	Check the input power voltage and transformer output voltage.
7	Press the EMERGENCY STOP button on the operator panel and turn on the controller.
8	Check the interface signals between controller and robot mechanical unit.
9	Check the parameters. If necessary, set them.
10	Release the EMERGENCY STOP button on the operator panel. Turn on the controller.
11	Check the movement along each axis in manual jog mode.
12	Check the behavior of the interface signals of end effector.
13	Check the behavior of the peripheral device control interface signals.

5.7 RESETTING OVERTRAVEL AND EMERGENCY STOP AT INSTALLATION

An overtravel and emergency stop occur when the robot is operated for the first time after it is installed and the mechanical and controllers are wired. This section describes how to reset the overtravel and emergency stop.
Remove the red plate fastening the swiveling axis beforehand.
The J2 and J3 axes are pressed against the hard stops at shipment. Therefore, an overtravel alarm occurs when the power is turned on after installation.
The robot can also be in an emergency stop state if the peripheral device control interface is not connected.

5.7.1 Peripheral Device Interface Processing

Take the following actions if signals XIMSTP, XHOLD, XSFSD, and ENBL are not used.

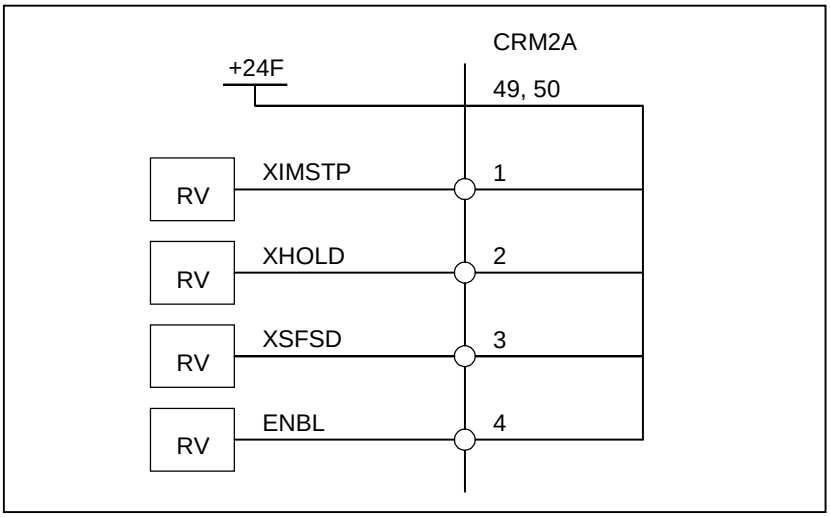

5.7.2 Resetting Overtravel

1) Select [OT release] on the overtravel release screen to release each robot axis from the overtravel state.
2) Hold down the shift key, and press the alarm release button to reset the alarm condition.
3) Still hold down the shift key, and jog to bring all axes that are in overtravel state into the movable range.

5.7.3 How to Disable/Enable HBK

1) Press [MENU] key on the teach pendant.
2) Select [NEXT].
3) Select [SYSTEM].
4) Select F1 [TYPE] on the teach pendant.
5) Select [Config] to disable/enable HBK.

Status	Hand Broken enable/disable setting	HBK (*1)	HBK detection	Robot operation	Message
1	Enable	CLOSE	Yes	Possible	None
2	Enable	OPEN	Yes	Impossible	SRVO-006
3	Disable	CLOSE	No (*2)	Impossible	SRVO-302
4	Disable	OPEN	No	Possible	At cold start, SRVO-300

NOTE

1 Robot EE connector

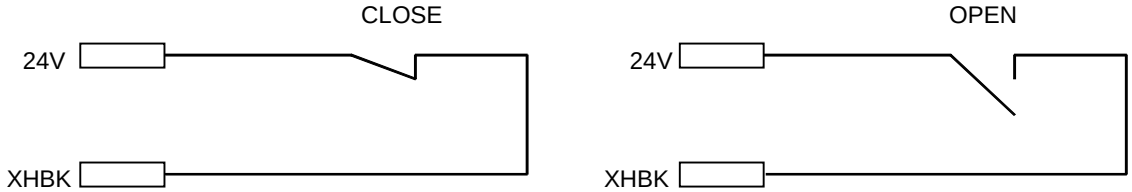

2 The moment the HBK circuit is closed, alarm "Servo 302" occurs. HBK setting needs to be valid manually. When the HBK setting is valid and the HBK circuit is opened, causing alarm "Servo 006".

3 If the power is turned off and on again under the condition stated in *2, status 4 is entered, so the alarm condition is removed.

4 It is necessary to short HBK signal of the second 6-axis amplifier (slave) when using two 6-axis amplifiers in the same group.

5.7.4 How to Disable/Enable Pneumatic Pressure Alarm (PPABN)

1) Press [MENU] key on the teach pendant.
2) Select [NEXT].
3) Select [SYSTEM].
4) Select F1 [TYPE] on the teach pendant.
5) Select [Config] to disable/enable PPABN.

APPENDIX

A SPECIFICATION LIST

Name	Ordering Specification	FANUC Specification	Note
Main board	A05B-2600-H001	A16B-3200-0730	Standard
		A16B-3200-0780	
	A05B-2600-H002	A16B-3200-0731	Option (Force sensor)
		A16B-3200-0781	
	A05B-2600-H003	A16B-3200-0732	Option (Force sensor)
		A16B-3200-0782	(High speed com. CPU)
	A05B-2600-H004	A16B-3200-0800	Standard For I/O Link *i* slave
	A05B-2600-H005	A16B-3200-0801	Option (Force sensor) For I/O Link *i* slave
	A05B-2600-H006	A16B-3200-0802	Option (Force sensor, High speed) For I/O Link *i* slave
	A05B-2670-H001 (R-30*i*B Plus)	A16B-3200-0810	Standard For I/O Link *i* slave
	A05B-2670-H002 (R-30*i*B Plus)	A16B-3200-0811	Option (Force sensor) For I/O Link *i* slave
	A05B-2670-H003 (R-30*i*B Plus)	A16B-3200-0812	Option (Force sensor, High speed) For I/O Link *i* slave
CPU card	A05B-2600-H020	A20B-3300-0686	Standard / SDRAM 32Mbyte
		A17B-3301-0106	
	A05B-2600-H021	A20B-3300-0687	Standard / SDRAM 64Mbyte
		A17B-3301-0107	
	A05B-2600-H022	A20B-3300-0688	Standard / SDRAM 128Mbyte
		A17B-3301-0108	
	A05B-2600-H023	A20B-3300-0683	High speed / SDRAM 32Mbyte
		A17B-3301-0103	
	A05B-2600-H024	A20B-3300-0684	High speed / SDRAM 64Mbyte
		A17B-3301-0104	
	A05B-2600-H025	A20B-3300-0685	High speed / SDRAM 128Mbyte
		A17B-3301-0105	
	A05B-2600-H026	A17B-3301-0109	Standard / SDRAM 32Mbyte For I/O Link *i* slave
	A05B-2600-H027	A17B-3301-0110	Standard / SDRAM 64Mbyte For I/O Link *i* slave
	A05B-2600-H028	A17B-3301-0111	Standard / SDRAM 128Mbyte For I/O Link *i* slave
	A05B-2600-H029	A17B-3301-0112	High speed / SDRAM 32Mbyte For I/O Link *i* slave
	A05B-2600-H030	A17B-3301-0113	High speed / SDRAM 64Mbyte For I/O Link *i* slave
	A05B-2600-H031	A17B-3301-0114	High speed / SDRAM 128Mbyte For I/O Link *i* slave
	A05B-2670-H020 (R-30*i*B Plus)	A17B-3301-0250	Standard /DRAM 1GB For I/O Link *i* slave

Name	Ordering Specification	FANUC Specification	Note
Servo card	A05B-2600-H040	A20B-3300-0664	6-axis
		A20B-3300-0774	
	A05B-2600-H041	A20B-3300-0663	12-axis
		A20B-3300-0773	
	A05B-2600-H042	A20B-3300-0662	18-axis
		A20B-3300-0772	
	A05B-2600-H043	A20B-3300-0661	24-axis
		A20B-3300-0771	
	A05B-2600-H044	A20B-3300-0660	36-axis
		A20B-3300-0770	
	A05B-2670-H040 (R-30*i*B Plus)	A20B-3300-0819	6-axis
	A05B-2670-H041 (R-30*i*B Plus)	A20B-3300-0818	12-axis
	A05B-2670-H042 (R-30*i*B Plus)	A20B-3300-0817	18-axis
	A05B-2670-H043 (R-30*i*B Plus)	A20B-3300-0816	24-axis
	A05B-2670-H044 (R-30*i*B Plus)	A20B-3300-0815	36-axis
FROM/SRAM module	A05B-2600-H060	A20B-3900-0283 A20B-3900-0297	FROM 32M/ SRAM 1M
	A05B-2600-H061	A20B-3900-0284 A20B-3900-0298	FROM 32M/ SRAM 2M
	A05B-2600-H062	A20B-3900-0285 A20B-3900-0299	FROM 32M/ SRAM 3M
	A05B-2600-H063	A20B-3900-0286	FROM 64M/ SRAM 1M
	A05B-2600-H064	A20B-3900-0287	FROM 64M/ SRAM 2M
	A05B-2600-H065	A20B-3900-0288	FROM 64M/ SRAM 3M
	A05B-2600-H066	A20B-3900-0280	FROM 128M/ SRAM 1M
	A05B-2600-H067	A20B-3900-0281	FROM 128M/ SRAM 2M
	A05B-2600-H068	A20B-3900-0282	FROM 128M/ SRAM 3M
	A05B-2600-H069 (R-30*i*B Plus)	A20B-3900-0293	FROM 256M/SRAM 1M
	A05B-2600-H070 (R-30*i*B Plus)	A20B-3900-0295	FROM 256M/SRAM 2M
	A05B-2600-H071 (R-30*i*B Plus)	A20B-3900-0296	FROM 256M/SRAM 3M
Battery	A02B-0200-K102	A98L-0031-0012	For memory backup
Backplane	A05B-2600-H080	A05B-2600-C001	2 slot
	A05B-2600-H081	A05B-2600-C002	4 slot (B cabinet)
	A05B-2600-H082	A05B-2600-C003	3 slot (A cabinet)
Power supply unit	A05B-2600-H100	A16B-2203-0910	
Fixing plate for CF card	A05B-2500-J300		With adapter for CF card
Additional Safety I/O board	A05B-2600-J131	A20B-8201-0110	
Safety I/O Board	A05B-2600-J130	A20B-3300-0690	For B cabinet
DeviceNet board	A05B-2600-J042	A20B-8101-0641	Master(DN4 1ch, Mini slot)
	A05B-2600-J043	A20B-8201-0170	Master(DN4 2ch, Mini slot)
	A05B-2600-J040	A20B-8101-0330	Slave（Mini slot)

Name	Ordering Specification	FANUC Specification	Note
ARC Link board	A05B-2600-J050	A20B-8101-0641	1ch, Mini slot
DeviceNet DAUGHTER board	A05B-2600-J080	A15L-0001-0130#S	DN4 1ch
	A05B-2600-J081	A15L-0001-0130#D	DN4 2ch
FL-net board	A05B-2600-J105	A20B-8101-0031	Mini slot
PC104 Interface Board	A05B-2600-J090	A16B-2204-0230	Full slot
	A05B-2600-J091	A16B-2204-0231	DENGENSHA Weld Timer, Full slot
	A05B-2600-J095	A20B-8101-0350	Wide-mini
Profibus board	A05B-2600-J070	A20B-8101-0100	Slave（Mini slot)
	A05B-2600-J071	A20B-8101-0050	Master（Mini slot)
Profinet Mother Board	A05B-2600-J075	A20B-8201-0020	Without CP1604, Wide-mini
	A05B-2600-J076	A20B-8101-0930	Mini slot
Profinet Daughter Board	A05B-2600-J083	A15L-0001-0150	Mini slot
CC Link remote device station board	A05B-2600-J110	A20B-8101-0550	Mini slot
PCI Interface Board	A05B-2600-J060	A16B-2204-0220	Full slot
EtherCAT Slave Board	A05B-2600-J120	A20B-8101-0821	Mini slot
CC-Link IE Field Slave Board	A05B-2600-J111	A20B-8101-0920	Wide-mini slot
I/O Unit-MODEL A (5 slots)	A05B-2601-J130 For A cabinet	A03B-0819-C003	Base unit
		A03B-0819-C011	Interface unit
	A05B-2603-J130 For B cabinet	A03B-0819-C002	Base unit
		A03B-0819-C011	Interface unit
	A05B-2601-J132 A cabinet/Top box	A03B-0819-C002	Base unit
		A03B-0819-C011	Interface unit
	A05B-2601-J131 A cabinet/Side box	A03B-0819-C003	Base unit
		A03B-0819-C011	Interface unit
Cover for Wide-mini slot	A05B-2500-J320		Wide-mini slot
Process I/O board JA	A05B-2600-J001	A16B-2204-0010	DI/DO=96/96(Source type)
Process I/O board JB	A05B-2600-J002	A16B-2204-0011	DI/DO=40/40(Source type)
Process I/O board CA	A05B-2600-J003	A16B-2201-0470	
Process I/O board MA	A05B-2600-J020	A20B-2004-0380	DI/DO=20/16(Source type)
	A05B-2600-J022	A20B-2004-0381	
Process I/O board MB	A05B-2600-J021	A20B-2101-0730	WI/WO=5/4(Sink type), D/A=2
	A05B-2600-J023	A20B-2101-0731	
Fuse	A05B-2300-K010	A60L-0001-0290#LM32	for interface module
Line tracking board	A05B-2600-J035	A20B-8101-0421	2ch/2connector (Wide mini slot)
	A05B-2600-J036	A20B-8101-0601	2ch/1connector (Mini slot for A-cabinet)
	A05B-2600-J037	A20B-8101-0601	2ch/1connector (Mini slot for B-cabinet)
DO module fuse	A05B-2300-K011	A60L-0001-0260#5R00	Fuse A
	A05B-2300-K012	A60L-0001-0276#3.15	Fuse B
DI module	A05B-2450-J400	A03B-0819-C101	AID32A1
	A05B-2450-J401	A03B-0819-C102	AID32B1
	A05B-2450-J402	A03B-0819-C103	AID16C
	A05B-2450-J403	A03B-0819-C104	AID16D
	A05B-2450-J404	A03B-0819-C105	AID32E1
	A05B-2450-J405	A03B-0819-C110	AID32E2
	A05B-2450-J406	A03B-0819-C106	AID32F1
	A05B-2450-J407	A03B-0819-C109	AID32F2

Name	Ordering Specification	FANUC Specification	Note
DI module	A05B-2450-J408	A03B-0819-C107	AIA16G
	A05B-2450-J409	A03B-0819-C111	AID32H1
	A05B-2450-J410	A03B-0819-C113	AID16K
	A05B-2450-J411	A03B-0819-C114	AID16L
DO module	A05B-2450-J430	A03B-0819-C162	AOD32A1
	A05B-2450-J431	A03B-0819-C151	AOD08C
	A05B-2450-J432	A03B-0819-C152	AOD08D
	A05B-2450-J433	A03B-0819-C153	AOD16C
	A05B-2450-J434	A03B-0819-C154	AOD16D
	A05B-2450-J435	A03B-0819-C155	AOD32C1
	A05B-2450-J436	A03B-0819-C156	AOD32D1
	A05B-2450-J437	A03B-0819-C167	AOD32D2
	A05B-2450-J438	A03B-0819-C157	AOA05E
	A05B-2450-J439	A03B-0819-C158	AOA08E
	A05B-2450-J440	A03B-0819-C159	AOA12F
	A05B-2450-J441	A03B-0819-C160	AOR08G
	A05B-2450-J442	A03B-0819-C161	AOR16G
	A05B-2450-J443	A03B-0819-C165	AOR16H2
	A05B-2450-J444	A03B-0819-C182	AOD16DP
	A05B-2450-J445	A03B-0819-C172	AOD32C2
Analog input module	A05B-2450-J460	A03B-0819-C051	AAD04A
Analog output module	A05B-2450-J470	A03B-0819-C052	ADA02A
	A05B-2450-J471	A03B-0819-C060	ADA02B
6-axis servo amplifier (See section 8.7 in MAINTENANCE.)	A05B-2601-H050	A06B-6400-H101	A-cabinet
	A05B-2603-H050		B-cabinet
	A05B-2601-H051	A06B-6400-H102	A-cabinet
	A05B-2603-H051		B-cabinet
	A05B-2601-H052	A06B-6400-H002	A-cabinet
	A05B-2603-H052		B-cabinet
	A05B-2601-H053	A06B-6400-H003	A-cabinet
	A05B-2603-H053		B-cabinet
	A05B-2601-H054	A06B-6400-H004	A-cabinet
	A05B-2603-H054		B-cabinet
	A05B-2601-H055	A06B-6400-H005	A-cabinet
	A05B-2603-H055		B-cabinet
Servo amplifier	A05B-2605-J040#H105	A06B-6240-H105	
	A05B-2605-J040#H106	A06B-6240-H106	
	A05B-2605-J040#H201	A06B-6240-H201	
	A05B-2605-J040#H209	A06B-6240-H209	
	A05B-2605-J040#H301	A06B-6240-H301	
Discharge resistor	A05B-2601-H060	A05B-2601-C100	A-cabinet
	A05B-2601-H062	A05B-2601-C102	A-cabinet
	A05B-2601-H063	A05B-2601-C103	A-cabinet
	A05B-2603-H060	A05B-2603-C100	B-cabinet
	A05B-2603-H062		B-cabinet
Discharge resistor for PS	A05B-2601-H061	A05B-2601-C101	A-cabinet
	A05B-2603-H061	A05B-2603-C101	B-cabinet
αiPS	A06B-6200-H015		Power supply regeneration
	A06B-6200-H037		

Name	Ordering Specification	FANUC Specification	Note
Transformer	A05B-2601-H350	A80L-0024-0028	A/B-cabinet, 3kVA, TYPE E
	A05B-2603-H350		
	A05B-2601-H354	A80L-0024-0029	A/B- cabinet, 3kVA, TYPE D
	A05B-2603-H354		
	A05B-2601-H351	A80L-0026-0040#A	A- cabinet, 7.5kVA, TYPE E
	A05B-2601-H355	A80L-0026-0041#A	A- cabinet, 7.5kVA, TYPE D
	A05B-2601-H352	A80L-0028-0024#A	A- cabinet,10.5kVA, TYPE E
	A05B-2601-H356	A80L-0028-0027#A	A- cabinet,10.5kVA, TYPE D
	A05B-2603-H351	A80L-0026-0040	B- cabinet, 7.5kVA, TYPE E
	A05B-2603-H355	A80L-0026-0041	B- cabinet, 7.5kVA, TYPE D
	A05B-2603-H352	A80L-0028-0024	B- cabinet,10.5kVA, TYPE E
	A05B-2603-H356	A80L-0028-0027	B- cabinet,10.5kVA, TYPE D
	A05B-2603-H353	A80L-0028-0025	B- cabinet,13.0kVA, TYPE E
	A05B-2603-H357	A80L-0028-0028	B- cabinet,13.0kVA, TYPE D
Brake release unit	A05B-2450-J350	A05B-2400-C151	See Subsection E in Appendix.
	A05B-2450-J351	A05B-2400-C152	
AC Reactor	A05B-2601-H365	A81L-0001-0211	A-cabinet
	A05B-2603-H365		B-cabinet
Breaker (A-cabinet)	A05B-2601-H070	A60L-0001-0509#C050	10.5kVA, 200-230V, 50A
		A60L-0001-0511#N10D	
	A05B-2601-H072	A60L-0001-0509#C030	7.5KVA, 200-230V, 30A
		A60L-0001-0511#N10D	
	A05B-2601-H073	A60L-0001-0509#C030	10.5KVA, 380-500V, 30A
		A60L-0001-0511#N10D	
	A05B-2601-H074	A60L-0001-0509#C030	10.5KVA, 380-400V, 30A
		A60L-0001-0511#N10D	
	A05B-2601-H075	A60L-0001-0509#C020	3.0KVA, 200-230V, 20A
		A60L-0001-0511#N10D	
	A05B-2601-H076	A60L-0001-0509#C020	7.5KVA, 380-500V, 20A
		A60L-0001-0511#N10D	
	A05B-2601-H077	A60L-0001-0509#C020	7.5KVA, 380-400V, 20A
		A60L-0001-0511#N10D	
	A05B-2601-H078	A60L-0001-0509#C015	3.0KVA, 380-500V,15A
		A60L-0001-0511#N10D	
	A05B-2601-H079	A60L-0001-0509#C015	3.0KVA,380-400V,15A
		A60L-0001-0511#N10D	
	A05B-2601-H190	A60L-0001-0509#C030	For AC reactor, 200-230V, 30A
		A60L-0001-0511#N10D	
	A05B-2601-H130	A05B-2601-C170	10.5KVA, 380-500V, 30A (EMC)
		A60L-0001-0509#C030	
		A60L-0001-0511#N10D	
		A70L-0001-0107	
	A05B-2601-H131	A05B-2601-C171	7.5KVA, 380-500V, 20A (EMC)
		A60L-0001-0509#C020	
		A60L-0001-0511#N10D	
		A70L-0001-0107	
	A05B-2601-H132	A05B-2601-C172	3.0KVA, 380-500V, 15A (EMC)
		A60L-0001-0509#C015	
		A60L-0001-0511#N10D	
		A70L-0001-0107	

Name	Ordering Specification	FANUC Specification	Note
Breaker (A-cabinet)	A05B-2601-H135	A05B-2601-C175	7.5KVA, 200-230V, 30A (EMC)
		A60L-0001-0509#C030	
		A60L-0001-0511#N10D	
		A70L-0001-0107	
	A05B-2601-H136	A05B-2601-C176	3.0KVA, 200-230V, 20A (EMC)
		A60L-0001-0509#C020	
		A60L-0001-0511#N10D	
		A70L-0001-0107	
	A05B-2601-H180	A05B-2601-C280	10.5KVA, 380-500V,30A (CE/NRTL)
		A60L-0001-0523#A030	
		A60L-0001-0523#LFDR	
		A70L-0001-0107	
	A05B-2601-H181	A05B-2601-C281	7.5KVA, 380-500V, 20A (CE/NRTL)
		A60L-0001-0523#A020	
		A60L-0001-0523#LFDR	
		A70L-0001-0107	
	A05B-2601-H182	A05B-2601-C282	3.0KVA, 380-500V, 15A (CE/NRTL)
		A60L-0001-0523#A015	
		A60L-0001-0523#LFDR	
		A70L-0001-0107	
	A05B-2601-H185	A05B-2601-C285	7.5KVA, 200-230V, 30A (CE/NRTL)
		A60L-0001-0523#A030	
		A60L-0001-0523#LFDR	
		A70L-0001-0107	
	A05B-2601-H186	A05B-2601-C286	3.0KVA, 200-230V, 20A (CE/NRTL)
		A60L-0001-0523#A020	
		A60L-0001-0523#LFDR	
		A70L-0001-0107	
Breaker (B-cabinet)	A05B-2603-H070	A60L-0001-0509#C050	10.5kVA, 200-230V, 50A
		A60L-0001-0463	
	A05B-2603-H071	A60L-0001-0509#D060	13.0kVA, 200-230V, 60A
		A60L-0001-0463	
	A05B-2603-H072	A60L-0001-0509#C030	7.5KVA, 200-230V, 30A
		A60L-0001-0463	
	A05B-2603-H073	A60L-0001-0509#C030	10.5KVA/13.0KVA, 380-500V, 30A
		A60L-0001-0463	
	A05B-2603-H074	A60L-0001-0509#C030	10.5KVA/13.0KVA, 380-400V, 30A
		A60L-0001-0463	
	A05B-2603-H075	A60L-0001-0509#C020	3.0KVA, 200-230V, 20A
		A60L-0001-0463	
	A05B-2603-H076	A60L-0001-0509#C020	7.5KVA, 380-500V, 20A
		A60L-0001-0463	
	A05B-2603-H077	A60L-0001-0509#C020	7.5KVA, 380-400V, 20A
		A60L-0001-0463	
	A05B-2603-H078	A60L-0001-0509#C015	3.0KVA, 380-500V,15A
		A60L-0001-0463	
	A05B-2603-H079	A60L-0001-0509#C015	3.0KVA,380-400V,15A
		A60L-0001-0463	
	A05B-2603-H190	A60L-0001-0509#C030	For AC reactor, 200-230V 30A
		A60L-0001-0463	

Name	Ordering Specification	FANUC Specification	Note
Breaker (B-cabinet)	A05B-2603-H130	A05B-2603-C170	10.5KVA/13.0KVA, 380-500V, 30A (EMC)
		A60L-0001-0509#C030	
		A60L-0001-0463	
		A70L-0001-0107	
	A05B-2603-H131	A05B-2603-C171	7.5KVA, 380-500V, 20A (EMC)
		A60L-0001-0509#C020	
		A60L-0001-0463	
		A70L-0001-0107	
	A05B-2603-H132	A05B-2603-C172	3.0KVA, 380-500V, 15A (EMC)
		A60L-0001-0509#C015	
		A60L-0001-0463	
		A70L-0001-0107	
	A05B-2603-H135	A05B-2603-C175	7.5KVA, 200-230V, 30A (EMC)
		A60L-0001-0509#C030	
		A60L-0001-0463	
		A70L-0001-0107	
	A05B-2603-H136	A05B-2603-C176	3.0KVA, 200-230V, 20A (EMC)
		A60L-0001-0509#C020	
		A60L-0001-0463	
		A70L-0001-0107	
	A05B-2601-H180	A05B-2601-C280	10.5KVA/13.0KVA, 380-500V, 30A (CE/NRTL)
		A60L-0001-0523#A030	
		A60L-0001-0523#LFDR	
		A70L-0001-0107	
	A05B-2601-H181	A05B-2601-C281	7.5KVA, 380-500V, 20A (CE/NRTL)
		A60L-0001-0523#A020	
		A60L-0001-0523#LFDR	
		A70L-0001-0107	
	A05B-2601-H182	A05B-2601-C282	3.0KVA, 380-500V, 15A (CE/NRTL)
		A60L-0001-0523#A015	
		A60L-0001-0523#LFDR	
		A70L-0001-0107	
	A05B-2601-H185	A05B-2601-C285	7.5KVA, 200-230V, 30A (CE/NRTL)
		A60L-0001-0523#A030	
		A60L-0001-0523#LFDR	
		A70L-0001-0107	
	A05B-2601-H186	A05B-2601-C286	3.0KVA, 200-230V, 20A (CE/NRTL)
		A60L-0001-0523#A020	
		A60L-0001-0523#LFDR	
		A70L-0001-0107	
Leakage breaker (A-cabinet)	A05B-2601-H100	A60L-0001-0498#C050B	10.5KVA, 200-230V, 50A
		A60L-0001-0511#N10D	
	A05B-2601-H102	A60L-0001-0498#C030B	7.5KVA, 200-230V, 30A
		A60L-0001-0511#N10D	
	A05B-2601-H103	A60L-0001-0498#J030B	10.5KVA, 380-500V, 30A
		A60L-0001-0511#N10D	
	A05B-2601-H104	A60L-0001-0498#C030B	10.5KVA, 380-400V, 30A
		A60L-0001-0511#N10D	
	A05B-2601-H105	A60L-0001-0498#C020B	3.0KVA, 200-230V, 20A
		A60L-0001-0511#N10D	
	A05B-2601-H106	A60L-0001-0498#J020B	7.5KVA, 380-500V, 20A
		A60L-0001-0511#N10D	

Name	Ordering Specification	FANUC Specification	Note
Leakage breaker (A-cabinet)	A05B-2601-H107	A60L-0001-0498#C020B	7.5KVA, 380-400V, 20A
		A60L-0001-0511#N10D	
	A05B-2601-H108	A60L-0001-0498#J015B	3.0KVA, 380-500V, 15A
		A60L-0001-0511#N10D	
	A05B-2601-H109	A60L-0001-0498#C015B	3.0KVA, 380-400V, 15A
		A60L-0001-0511#N10D	
	A05B-2601-H220	A60L-0001-0498#C030B	For AC reactor, 200-230V 30A
		A60L-0001-0511#N10D	
	A05B-2601-H160	A05B-2601-C200	10.5KVA, 380-500V, 30A (EMC)
		A60L-0001-0498#J030B	
		A60L-0001-0511#N10D	
		A70L-0001-0107	
	A05B-2601-H161	A05B-2601-C201	7.5KVA, 380-500V, 20A (EMC)
		A60L-0001-0498#J020B	
		A60L-0001-0511#N10D	
		A70L-0001-0107	
	A05B-2601-H162	A05B-2601-C202	3.0KVA, 380-500V, 15A (EMC)
		A60L-0001-0498#J015B	
		A60L-0001-0511#N10D	
		A70L-0001-0107	
	A05B-2601-H165	A05B-2601-C205	7.5KVA, 200-230V, 30A (EMC)
		A60L-0001-0498#J030B	
		A60L-0001-0511#N10D	
		A70L-0001-0107	
	A05B-2601-H166	A05B-2601-C206	3.0KVA, 200-230V, 20A (EMC)
		A60L-0001-0498#J020B	
		A60L-0001-0511#N10D	
		A70L-0001-0107	
Leakage breaker (B-cabinet)	A05B-2603-H100	A60L-0001-0498#C050B	10.5KVA, 200-230V, 50A
		A60L-0001-0463	
	A05B-2603-H101	A60L-0001-0498#D060B	13.0KVA, 200-230V, 60A
		A60L-0001-0463	
	A05B-2603-H102	A60L-0001-0498#C030B	7.5KVA, 200-230V, 30A
		A60L-0001-0463	
	A05B-2603-H103	A60L-0001-0498#J030B	10.5KVA/13.0KVA, 380-500V, 30A
		A60L-0001-0463	
	A05B-2603-H104	A60L-0001-0498#C030B	10.5KVA/13.0KVA, 380-400V, 30A
		A60L-0001-0463	
	A05B-2603-H105	A60L-0001-0498#C020B	3.0KVA, 200-230V, 20A
		A60L-0001-0463	
	A05B-2603-H106	A60L-0001-0498#J020B	7.5KVA, 380-500V, 20A
		A60L-0001-0463	
	A05B-2603-H107	A60L-0001-0498#C020B	7.5KVA, 380-400V, 20A
		A60L-0001-0463	
	A05B-2603-H108	A60L-0001-0498#J015B	3.0KVA, 380-500V, 10A
		A60L-0001-0463	
	A05B-2603-H109	A60L-0001-0498#C015B	3.0KVA, 380-400V, 10A
		A60L-0001-0463	
	A05B-2603-H220	A60L-0001-0498#C030B	For AC reactor, 200-230V 30A
		A60L-0001-0463	

Name	Ordering Specification	FANUC Specification	Note
Leakage breaker (B-cabinet)	A05B-2601-H160	A05B-2601-C200	10.5KVA/13.0KVA, 380-500V, 30A (EMC)
		A60L-0001-0498#J030B	
		A60L-0001-0511#N10D	
		A70L-0001-0107	
	A05B-2601-H161	A05B-2601-C201	7.5KVA, 380-500V, 20A (EMC)
		A60L-0001-0498#J020B	
		A60L-0001-0511#N10D	
		A70L-0001-0107	
	A05B-2601-H162	A05B-2601-C202	3.0KVA, 380-500V, 15A (EMC)
		A60L-0001-0498#J015B	
		A60L-0001-0511#N10D	
		A70L-0001-0107	
	A05B-2601-H165	A05B-2601-C205	7.5KVA, 200-230V, 30A (EMC)
		A60L-0001-0498#J030B	
		A60L-0001-0511#N10D	
		A70L-0001-0107	
	A05B-2601-H166	A05B-2601-C206	3.0KVA, 200-230V, 20A (EMC)
		A60L-0001-0498#J020B	
		A60L-0001-0511#N10D	
		A70L-0001-0107	
UL489 Breaker (A-cabinet)	A05B-2601-H251	A60L-0001-0523#A050	NF100-HRU, 10.5KVA, 200-230V, 50A
		A60L-0001-0523#LFDR	
	A05B-2601-H252	A60L-0001-0523#A030	NF100-HRU, 7.5KVA, 200-230V, 30A
		A60L-0001-0523#LFDR	
	A05B-2601-H253	A60L-0001-0523#A020	NF100-HRU, 3.0KVA, 200-230V, 20A
		A60L-0001-0523#LFDR	
	A05B-2601-H254	A60L-0001-0523#A030	NF100-HRU, 0.5KVA, 380-480V, 30A
		A60L-0001-0523#LFDR	
	A05B-2601-H255	A60L-0001-0523#A020	NF100-HRU, 7.5KVA, 380-480V, 20A
		A60L-0001-0523#LFDR	
	A05B-2601-H256	A60L-0001-0523#A015	NF100-HRU, 3.0KVA, 380-480V, 15A
		A60L-0001-0523#LFDR	
	A05B-2601-H259	A60L-0001-0523#A030	NF100-HRU, 200V-230V, 30A Without Transformer
		A60L-0001-0523#LFDR	
	A05B-2601-H261	A60L-0001-0512#E050	BW125RAGU, 10.5KVA, 200-230V, 50A
		A60L-0001-0511#CAA	
	A05B-2601-H262	A60L-0001-0512#E030	BW125RAGU, 7.5KVA, 200-230V, 30A
		A60L-0001-0511#CAA	
	A05B-2601-H263	A60L-0001-0512#E020	BW125RAGU, 3.0KVA, 200-230V, 20A
		A60L-0001-0511#CAA	
	A05B-2601-H264	A60L-0001-0512#E030	BW125RAGU, 10.5KVA, 380-575V, 30A
		A60L-0001-0511#CAA	
	A05B-2601-H265	A60L-0001-0512#E020	BW125RAGU, 7.5KVA, 380-575V, 20A
		A60L-0001-0511#CAA	
	A05B-2601-H266	A60L-0001-0512#E015	BW125RAGU, 3.0KVA, 380-575V, 15A
		A60L-0001-0511#CAA	
UL489 Breaker (B-cabinet)	A05B-2603-H261	A60L-0001-0512#E050	BW125RAGU, 10.5KVA/13.0KVA, 200-230V, 50A
		A60L-0001-0511#CAA	
	A05B-2603-H262	A60L-0001-0512#E030	BW125RAGU, 7.5KVA, 200-230V, 30A
		A60L-0001-0511#CAA	
	A05B-2603-H263	A60L-0001-0512#E020	BW125RAGU, 3.0KVA, 200-230V, 20A
		A60L-0001-0511#CAA	

Name	Ordering Specification	FANUC Specification	Note
UL489 Breaker (B-cabinet)	A05B-2603-H264	A60L-0001-0512#E030 A60L-0001-0511#CAA	BW125RAGU, 10.5KVA/13.0KVA, 380-575V, 30A
	A05B-2603-H265	A60L-0001-0512#E020 A60L-0001-0511#CAA	BW125RAGU, 7.5KVA, 380-575V, 20A
	A05B-2603-H266	A60L-0001-0512#E015 A60L-0001-0511#CAA	BW125RAGU, 3.0KVA, 380-575V, 15A
UL/CSA Breaker (A-cabinet)	A05B-2601-H267	A60L-0001-0532#B030 A60L-0001-0533	BW50KAGU,Top box 10.5KVA, 380-575V, 30A
	A05B-2601-H268	A60L-0001-0532#B020 A60L-0001-0533	BW50KAGU, Top box 3.0KVA/7.5KVA, 380-575V, 20A
	A05B-2601-H277	A60L-0001-0532#B030 A60L-0001-0533	BW50KAGU, Side box 10.5KVA, 380-575V, 30A
	A05B-2601-H278	A60L-0001-0532#B020 A60L-0001-0533	BW50KAGU, Side box 3.0KVA/7.5KVA, 380-575V, 20A
	A05B-2626-H270	A60L-0001-0532#B030 A60L-0001-0533	BW50KAGU, Remote operation box, 10.5KVA, 380-575V 30A
	A05B-2626-H271	A60L-0001-0532#B020 A60L-0001-0533	BW50KAGU, Remote operation box, 3.0KVA/7.5KVA, 380-575V, 20A
UL/CSA Breaker (B-cabinet)	A05B-2603-H254	A60L-0001-0532#A030 A60L-0001-0533	BW50KAGU, 10.5KVA/13.0KVA, 380-575V, 30A
	A05B-2603-H255	A60L-0001-0532#A020 A60L-0001-0533	BW50KAGU, 3.0KVA/7.5KVA, 380-575V, 20A
Caster	A05B-2300-J380		B-cabinet
Sensor I/Funit	A05B-2601-H300	A05B-2600-C320	CR-4*i*A, CR-7*i*A, CR-14*i*A, CR-15*i*A, CR-35*i*A
Fan unit	A05B-2601-H380	A05B-2601-C312	Fan unit A
	A05B-2601-H381	A05B-2601-C310	Fan unit B (Power regeneration)
	A05B-2601-H382	A05B-2601-C311	Fan unit C
Floor fan unit	A05B-2603-H380	A05B-2603-C312	
E-STOP unit	A05B-2601-H280	A05B-2601-C400 A20B-2200-0650	Standard, A-cabinet 3kVA, 10A
	A05B-2601-H282	A05B-2601-C402 A20B-2200-0650	Standard, A-cabinet 7.5kVA, 10.5kVA, 30A
	A05B-2601-H290	A05B-2601-C410 A20B-2200-0650	UL489, A-cabinet 3kVA, 10A
	A05B-2601-H292	A05B-2601-C412 A20B-2200-0650	UL489, A-cabinet 7.5kVA, 10.5kVA, 30A
	A05B-2603-H280	A05B-2603-C400 A20B-2102-0050	Standard, B-cabinet 3kVA, 10A
	A05B-2603-H282	A05B-2603-C402 A20B-2102-0050	Standard, B-cabinet 7.5kVA, 10.5kVA, 13kVA, 30A
	A05B-2603-H283	A05B-2603-C403 A20B-2102-0050	Standard, B-cabinet 13kVA, 40A
	A05B-2603-H290	A05B-2603-C410 A20B-2102-0050	UL489, B-cabinet 3kVA, 10A
	A05B-2603-H292	A05B-2603-C412 A20B-2102-0050	UL489, B-cabinet 7.5kVA,10.5kVA,13kVA,30A
	A05B-2603-H293	A05B-2603-C413 A20B-2102-0050	UL489, B-cabinet 13kVA,40A

Name	Ordering Specification	FANUC Specification	Note
Teach pendant (R-30*i*B)	A05B-2255-H100#ESW	A05B-2255-C102#ESW	English/ Spot welding
	A05B-2255-H100#EMH	A05B-2255-C102#EMH	English/ Material handling
	A05B-2255-H100#EAW	A05B-2255-C102#EAW	English/ ARC welding
	A05B-2255-H100#ESL	A05B-2255-C102#ESL	English/ Sealing
	A05B-2255-H100#EGN	A05B-2255-C102#EGN	English/ General
	A05B-2255-H100#SGN	A05B-2255-C102#SGN	General/ Symbolic
	A05B-2255-H100#JSW	A05B-2255-C102#JSW	Japanese/ Spot welding
	A05B-2255-H100#JMH	A05B-2255-C102#JMH	Japanese/ Material handling
	A05B-2255-H100#JAW	A05B-2255-C102#JAW	Japanese/ ARC welding
	A05B-2255-H100#JSL	A05B-2255-C102#JSL	Japanese/ Sealing
	A05B-2255-H100#JGN	A05B-2255-C102#JGN	Japanese/ General
Teach pendant (R-30*i*B Plus)	A05B-2256-H100#ESW	A05B-2256-C102#ESW	English/ Spot welding
	A05B-2256-H100#EMH	A05B-2256-C102#EMH	English/ Material handling
	A05B-2256-H100#EAW	A05B-2256-C102#EAW	English/ ARC welding
	A05B-2256-H100#ESL	A05B-2256-C102#ESL	English/ Sealing
	A05B-2256-H100#EGN	A05B-2256-C102#EGN	English/ General
	A05B-2256-H100#SGN	A05B-2256-C102#SGN	General/ Symbolic
	A05B-2256-H100#JSW	A05B-2256-C102#JSW	Japanese/ Spot welding
	A05B-2256-H100#JMH	A05B-2256-C102#JMH	Japanese/ Material handling
	A05B-2256-H100#JAW	A05B-2256-C102#JAW	Japanese/ ARC welding
	A05B-2256-H100#JSL	A05B-2256-C102#JSL	Japanese/ Sealing
	A05B-2256-H100#JGN	A05B-2256-C102#JGN	Japanese/ General
Teach pendant (Touch panel) (R-30*i*B)	A05B-2255-H101#ESW	A05B-2255-C101#ESW	English/ Spot welding
	A05B-2255-H101#EMH	A05B-2255-C101#EMH	English/ Material handling
	A05B-2255-H101#EAW	A05B-2255-C101#EAW	English/ ARC welding
	A05B-2255-H101#ESL	A05B-2255-C101#ESL	English/ Sealing
	A05B-2255-H101#EGN	A05B-2255-C101#EGN	English/ General
	A05B-2255-H101#SGN	A05B-2255-C101#SGN	General/ Symbolic
	A05B-2255-H101#JSW	A05B-2255-C103#JSW	Japanese/ Spot welding
	A05B-2255-H101#JMH	A05B-2255-C101#JMH	Japanese/ Material handling
	A05B-2255-H101#JAW	A05B-2255-C101#JAW	Japanese/ ARC welding
	A05B-2255-H101#JSL	A05B-2255-C101#JSL	Japanese/ Sealing
	A05B-2255-H101#JGN	A05B-2255-C101#JGN	Japanese/ General
Teach pendant (Touch panel) (R-30*i*B Plus)	A05B-2256-H101#ESW	A05B-2256-C101#ESW	English/ Spot welding
	A05B-2256-H101#EMH	A05B-2256-C101#EMH	English/ Material handling
	A05B-2256-H101#EAW	A05B-2256-C101#EAW	English/ ARC welding
	A05B-2256-H101#ESL	A05B-2256-C101#ESL	English/ Sealing
	A05B-2256-H101#EGN	A05B-2256-C101#EGN	English/ General
	A05B-2256-H101#SGN	A05B-2256-C101#SGN	General/ Symbolic
	A05B-2256-H101#JSW	A05B-2256-C103#JSW	Japanese/ Spot welding
	A05B-2256-H101#JMH	A05B-2256-C101#JMH	Japanese/ Material handling
	A05B-2256-H101#JAW	A05B-2256-C101#JAW	Japanese/ ARC welding
	A05B-2256-H101#JSL	A05B-2256-C101#JSL	Japanese/ Sealing
	A05B-2256-H101#JGN	A05B-2256-C101#JGN	Japanese/ General

Name	Ordering Specification	FANUC Specification	Note
Teach pendant (Haptic) (R-30*i*B)	A05B-2255-H104#ESW	A05B-2255-C104#ESW	English/ Spot welding
	A05B-2255-H104#EMH	A05B-2255-C104#EMH	English/ Material handling
	A05B-2255-H104#EAW	A05B-2255-C104#EAW	English/ ARC welding
	A05B-2255-H104#ESL	A05B-2255-C104#ESL	English/ Sealing
	A05B-2255-H104#EGN	A05B-2255-C104#EGN	English/ General
	A05B-2255-H104#SGN	A05B-2255-C104#SGN	General/ Symbolic
	A05B-2255-H104#JSW	A05B-2255-C104#JSW	Japanese/ Spot welding
	A05B-2255-H104#JMH	A05B-2255-C104#JMH	Japanese/ Material handling
	A05B-2255-H104#JAW	A05B-2255-C104#JAW	Japanese/ ARC welding
	A05B-2255-H104#JSL	A05B-2255-C104#JSL	Japanese/ Sealing
	A05B-2255-H104#JGN	A05B-2255-C104#JGN	Japanese/ General
Teach pendant (Haptic) (R-30*i*B Plus)	A05B-2256-H102#ESW	A05B-2256-C102#ESW	English/ Spot welding
	A05B-2256-H102#EMH	A05B-2256-C102#EMH	English/ Material handling
	A05B-2256-H102#EAW	A05B-2256-C102#EAW	English/ ARC welding
	A05B-2256-H102#ESL	A05B-2256-C102#ESL	English/ Sealing
	A05B-2256-H102#EGN	A05B-2256-C102#EGN	English/ General
	A05B-2256-H102#SGN	A05B-2256-C102#SGN	General/ Symbolic
	A05B-2256-H102#JSW	A05B-2256-C102#JSW	Japanese/ Spot welding
	A05B-2256-H102#JMH	A05B-2256-C102#JMH	Japanese/ Material handling
	A05B-2256-H102#JAW	A05B-2256-C102#JAW	Japanese/ ARC welding
	A05B-2256-H102#JSL	A05B-2256-C102#JSL	Japanese/ Sealing
	A05B-2256-H102#JGN	A05B-2256-C102#JGN	Japanese/ General
Teach pendant (Touch panel, Haptic) (R-30*i*B)	A05B-2255-H105#ESW	A05B-2255-C105#ESW	English/ Spot welding
	A05B-2255-H105#EMH	A05B-2255-C105#EMH	English/ Material handling
	A05B-2255-H105#EAW	A05B-2255-C105#EAW	English/ ARC welding
	A05B-2255-H105#ESL	A05B-2255-C105#ESL	English/ Sealing
	A05B-2255-H105#EGN	A05B-2255-C105#EGN	English/ General
	A05B-2255-H105#SGN	A05B-2255-C105#SGN	General/ Symbolic
	A05B-2255-H105#JSW	A05B-2255-C105#JSW	Japanese/ Spot welding
	A05B-2255-H105#JMH	A05B-2255-C105#JMH	Japanese/ Material handling
	A05B-2255-H105#JAW	A05B-2255-C105#JAW	Japanese/ ARC welding
	A05B-2255-H105#JSL	A05B-2255-C105#JSL	Japanese/ Sealing
	A05B-2255-H105#JGN	A05B-2255-C105#JGN	Japanese/ General
Teach pendant (Touch panel, Haptic) (R-30*i*B Plus)	A05B-2256-H103#ESW	A05B-2256-C103#ESW	English/ Spot welding
	A05B-2256-H103#EMH	A05B-2256-C103#EMH	English/ Material handling
	A05B-2256-H103#EAW	A05B-2256-C103#EAW	English/ ARC welding
	A05B-2256-H103#ESL	A05B-2256-C103#ESL	English/ Sealing
	A05B-2256-H103#EGN	A05B-2256-C103#EGN	English/ General
	A05B-2256-H103#SGN	A05B-2256-C103#SGN	General/ Symbolic
	A05B-2256-H103#JSW	A05B-2256-C103#JSW	Japanese/ Spot welding
	A05B-2256-H103#JMH	A05B-2256-C103#JMH	Japanese/ Material handling
	A05B-2256-H103#JAW	A05B-2256-C103#JAW	Japanese/ ARC welding
	A05B-2256-H103#JSL	A05B-2256-C103#JSL	Japanese/ Sealing
	A05B-2256-H103#JGN	A05B-2256-C103#JGN	Japanese/ General

Name	Ordering Specification	FANUC Specification	Note
Operator's panel (A-cabinet, without TP disconnect)	A05B-2601-H001	A05B-2601-C001	English/ 3 mode
	A05B-2601-H002	A05B-2601-C002	Japanese/ 3 mode
	A05B-2601-H003	A05B-2601-C003	Simple/ 3 mode
	A05B-2601-H004	A05B-2601-C004	English/ 2 mode
	A05B-2601-H005	A05B-2601-C005	Japanese/ 2 mode
	A05B-2601-H006	A05B-2601-C006	Simple/ 2 mode
	A05B-2601-H030	A05B-2601-C050	Symbol/3 mode/ top box mounting
	A05B-2601-H032	A05B-2601-C052	Symbol/2 mode/ top box mounting
Operator's panel (A-cabinet, with TP disconnect, "Warm mode")	A05B-2601-H013	A05B-2601-C013	English/ 3 mode
	A05B-2601-H014	A05B-2601-C014	Japanese/ 3 mode
	A05B-2601-H016	A05B-2601-C016	English/ 2 mode
	A05B-2601-H017	A05B-2601-C017	Japanese/ 2 mode
Operator's panel (R-30*i*B, B-cabinet)	A05B-2603-H001	A05B-2603-C001	Standard type (English/Symbol) (3 mode)
	A05B-2603-H002	A05B-2603-C002	Standard type (Japanese/Symbol) (3 mode)
	A05B-2603-H003	A05B-2603-C003	Simple type (3 mode)
	A05B-2603-H004	A05B-2603-C004	Standard type (English/Symbol) (2 mode)
	A05B-2603-H005	A05B-2603-C005	Standard type (Japanese/Symbol) (2 mode)
	A05B-2603-H006	A05B-2603-C006	Simple type (2 mode)
	A05B-2603-H030	A05B-2603-C010	Symbol/3 mode
Operator's panel (R-30*i*B Plus, B-cabinet)	A05B-2672-H001	A05B-2603-C001	Standard type (English/Symbol) (3 mode)
	A05B-2672-H002	A05B-2603-C002	Standard type (Japanese/Symbol) (3 mode)
	A05B-2672-H003	A05B-2603-C003	Simple type (3 mode)
	A05B-2672-H004	A05B-2603-C004	Standard type (English/Symbol) (2 mode)
	A05B-2672-H005	A05B-2603-C005	Standard type (Japanese/Symbol) (2 mode)
	A05B-2672-H006	A05B-2603-C006	Simple type (2 mode)
Switch box (without TP disconnect)	A05B-2601-H007	A05B-2601-C007	English/3 mode
	A05B-2601-H008	A05B-2601-C008	Japanease/3 mode
	A05B-2601-H009	A05B-2601-C009	Simple/3 mode
	A05B-2601-H010	A05B-2601-C010	English/2 mode
	A05B-2601-H011	A05B-2601-C011	Japanease/2 mode
	A05B-2601-H012	A05B-2601-C012	Simple/2 mode
Switch box (with TP disconnect, "Warm mode")	A05B-2601-H019	A05B-2601-C019	English/3 mode
	A05B-2601-H020	A05B-2601-C020	Japanease/3 mode
	A05B-2601-H022	A05B-2601-C022	English/2 mode
	A05B-2601-H023	A05B-2601-C023	Japanease/2 mode
Operator's panel for remote operation box (without TP disconnect)	A05B-2625-H021	A05B-2601-C007	English/3 mode
	A05B-2625-H022	A05B-2601-C010	English/2 mode

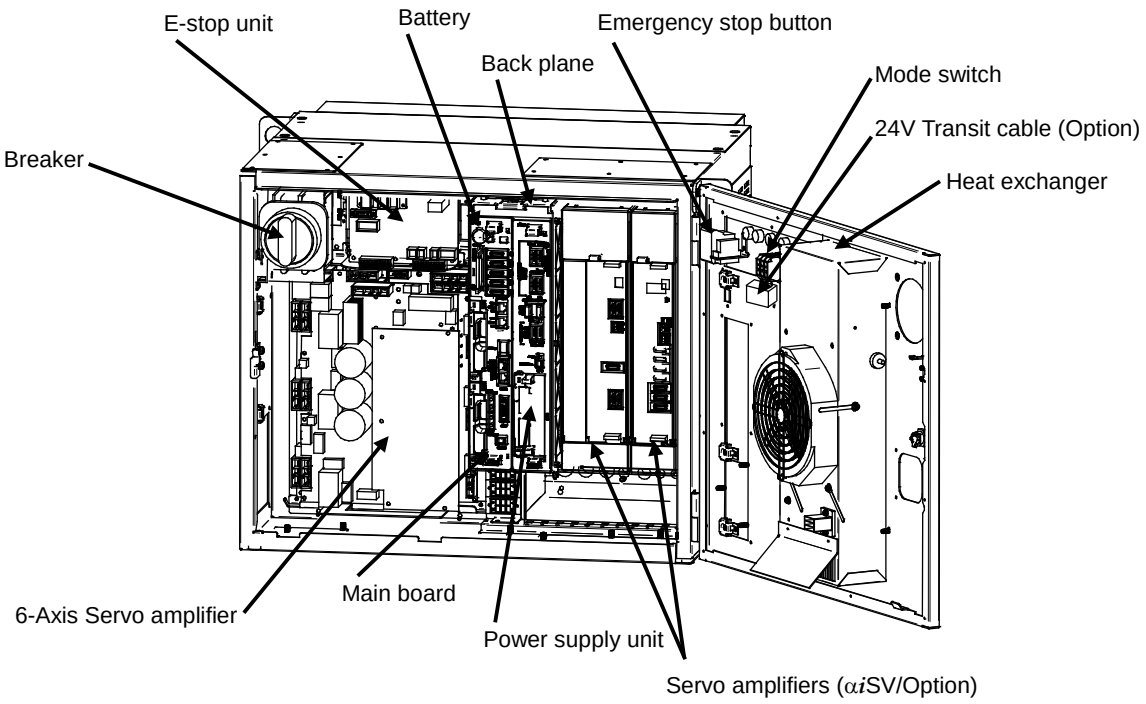

Fig.A (a) R-30*i*B/R-30*i*B Plus A-cabinet interior (Front)

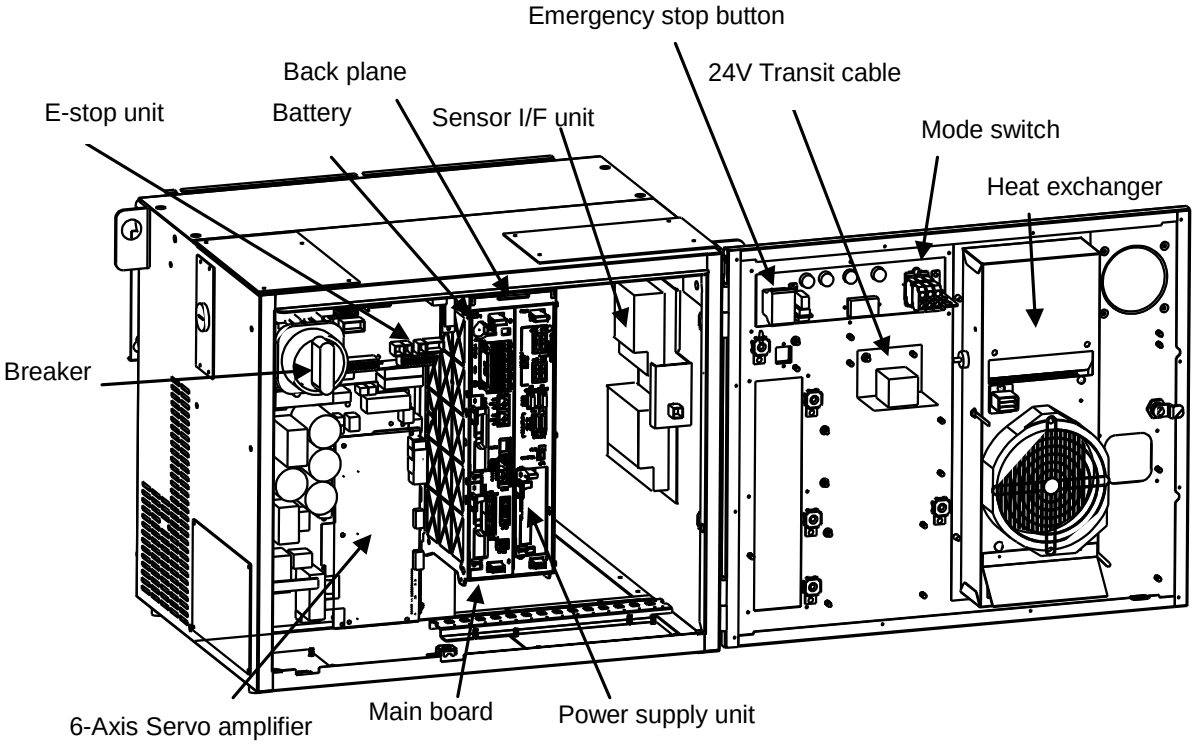

Fig.A (b) R-30*i*B/R-30*i*B Plus A-cabinet interior (Front) (CR-4*i*A, CR-7*i*A, CR-14*i*A, CR-15*i*A, CR-35*i*A)

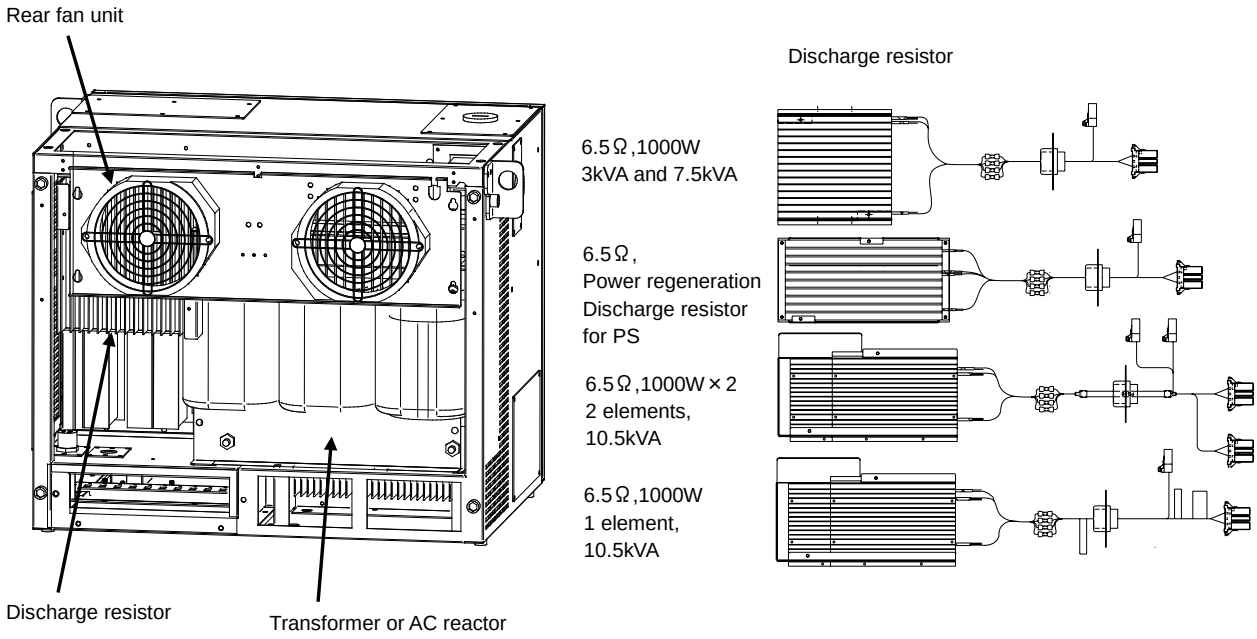

Fig.A (c) R-30*i*B/R-30*i*B Plus A-cabinet interior (Rear)

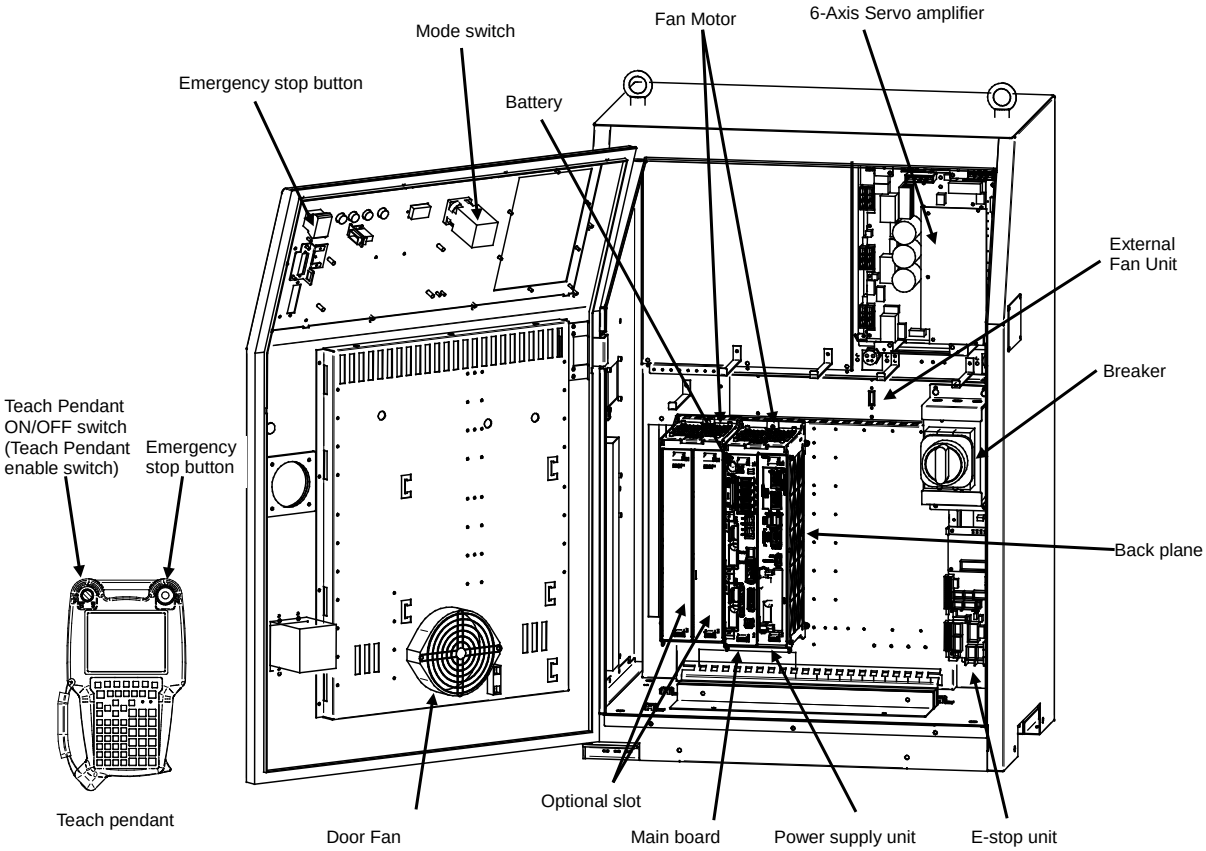

Fig.A (d) R-30*i*B/R-30*i*B Plus B-cabinet interior (Front)

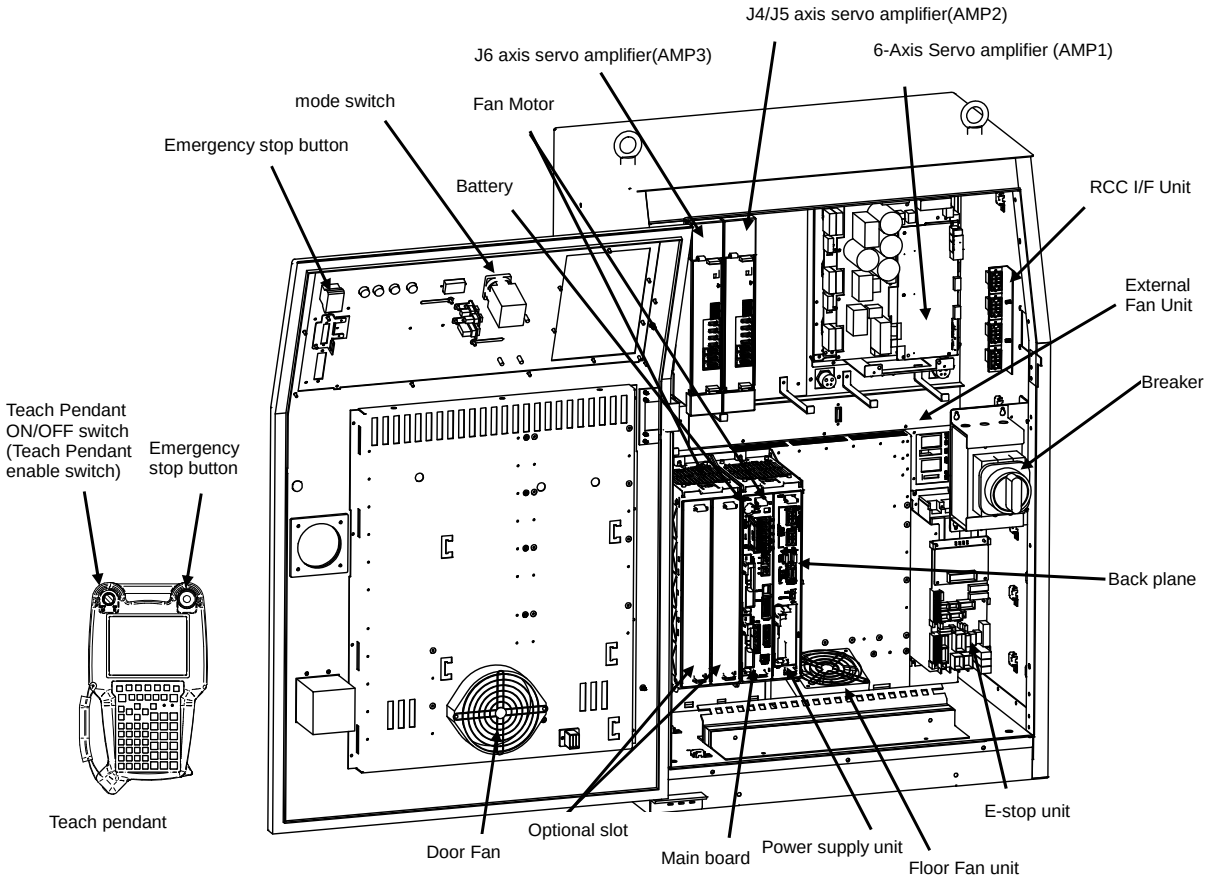

Fig.A (e) R-30*i*B/R-30*i*B Plus B-cabinet interior (Front)
(M-900*i*A/400L, M-900*i*A/600, M-900*i*B/700, M-900*i*B/400L)

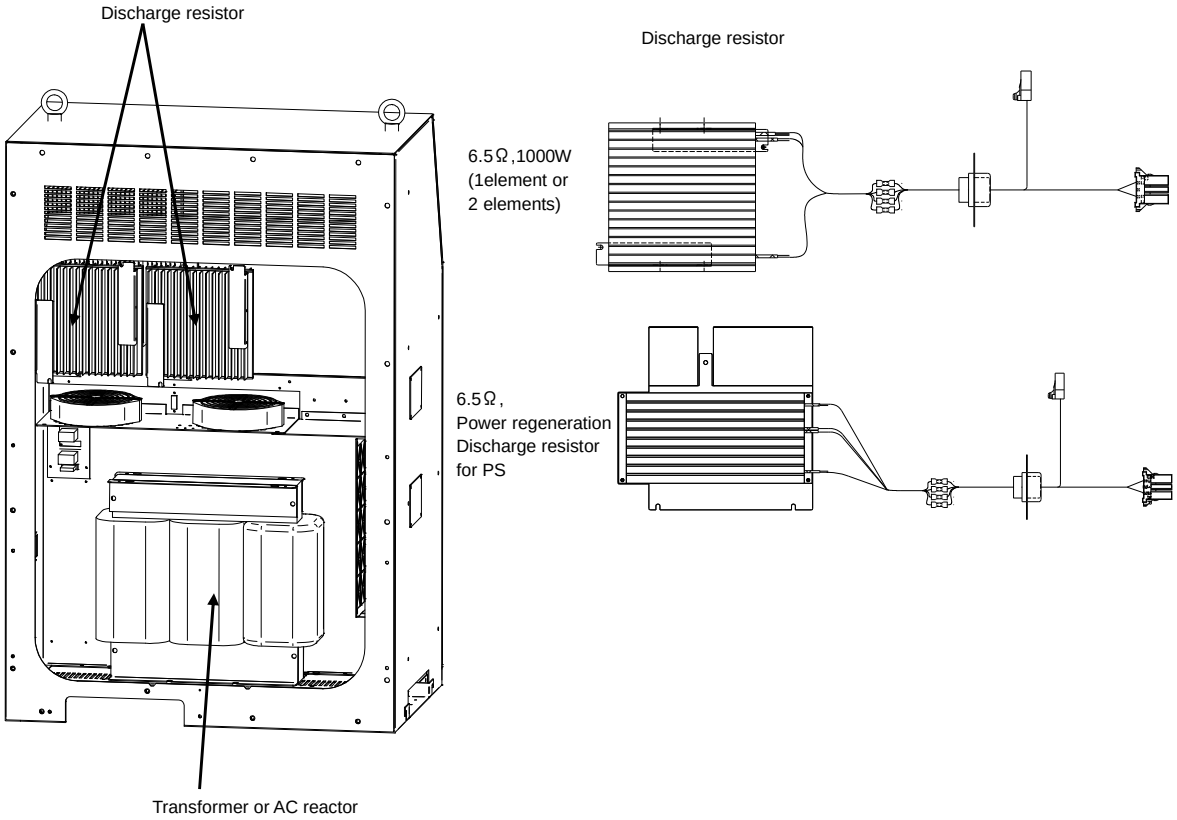

Fig.A (f) R-30*i*B/R-30*i*B Plus B-cabinet interior (Rear)

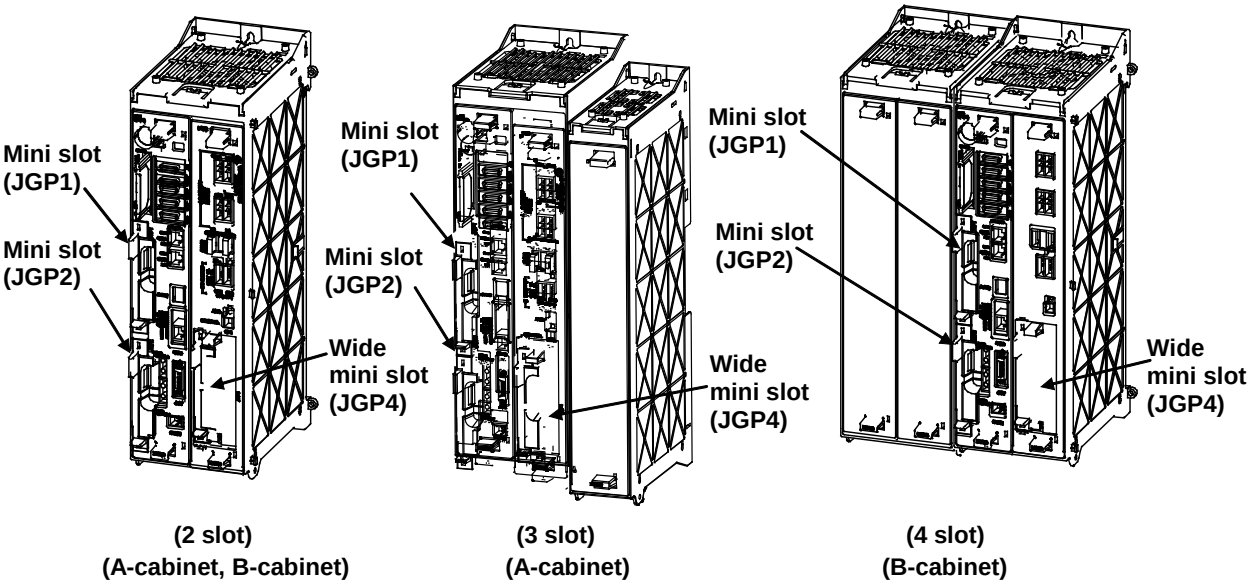

Fig.A (g) Backplane

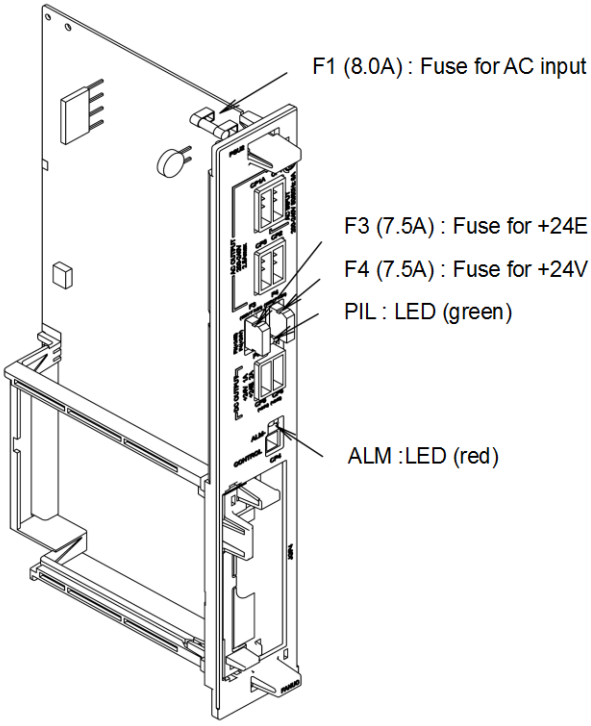

Fig.A (h) The power supply unit

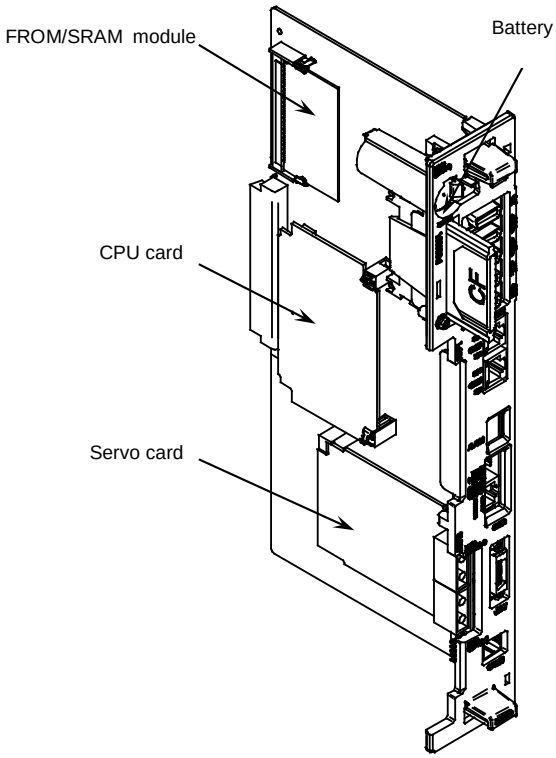

(R-30*i*B main board)

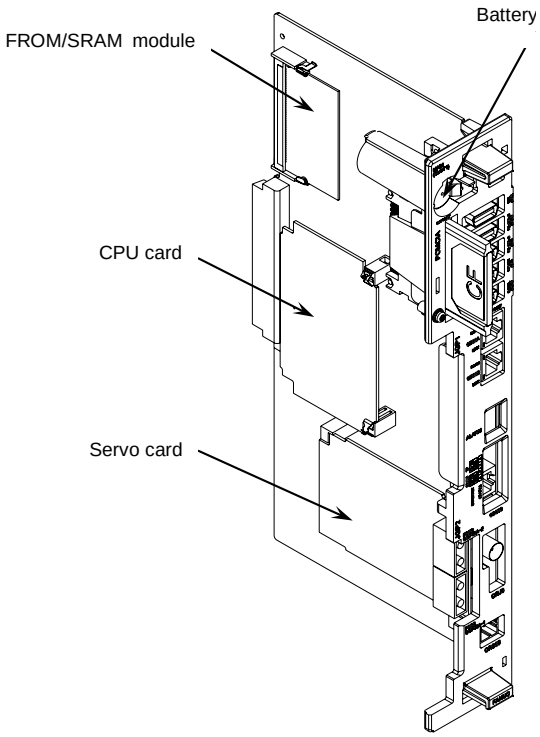

(R-30*i*B Plus main board)

Fig.A (i) Main board

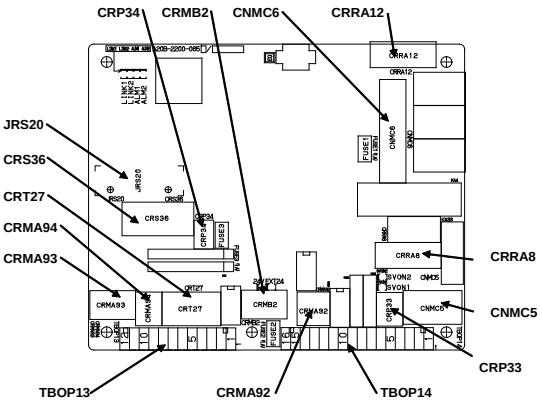

(A-cabinet)

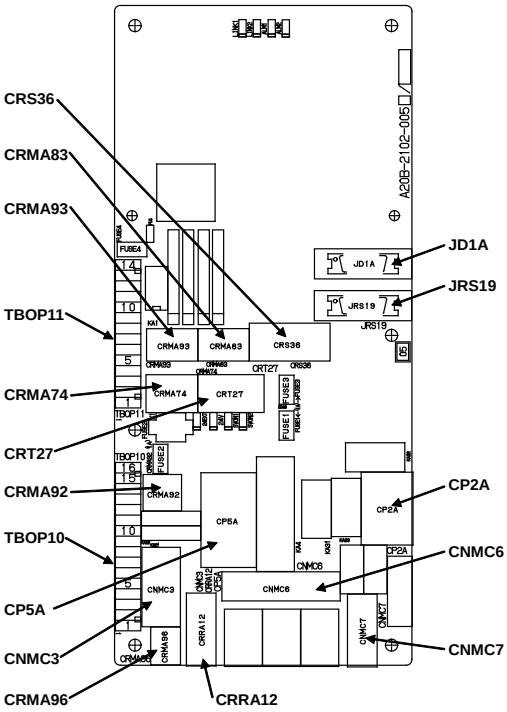

(B-cabinet)

Fig.A (j) Emergency stop board

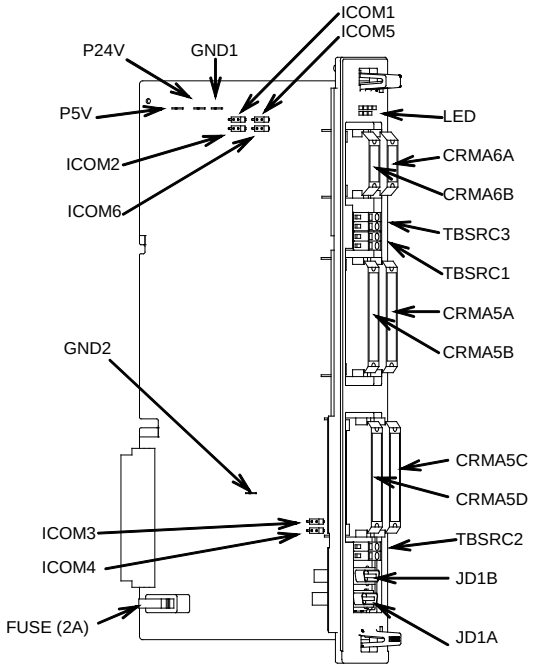

Total edition 04A or earlier

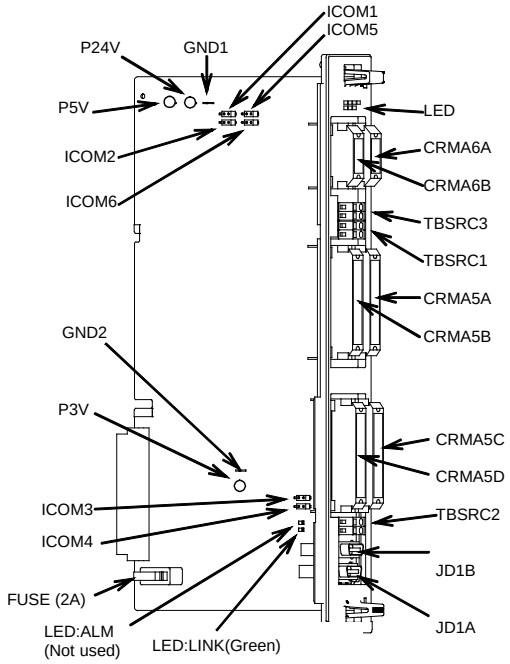

Total edition 05B or later

Fig.A (k) Process I/O Board JA

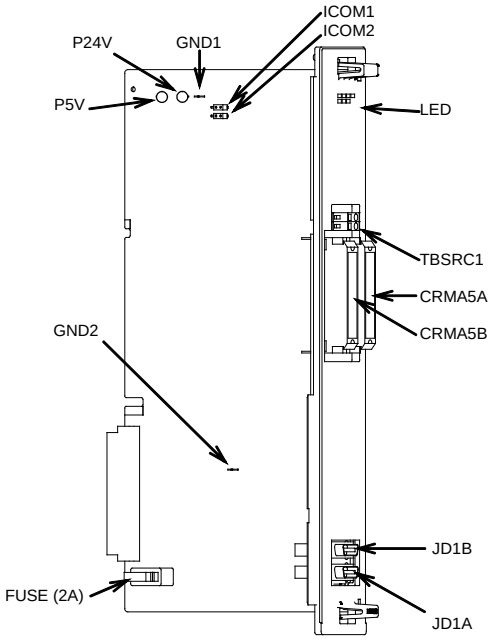

Total edition 04A or earlier

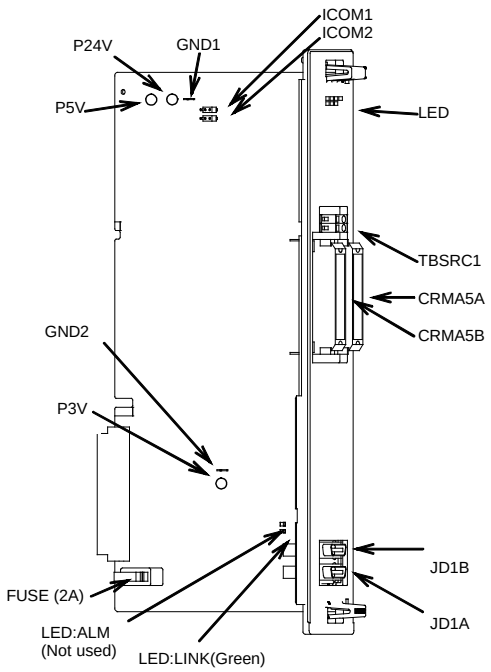

Total edition 05B or later

Fig.A (l) Process I/O Board JB

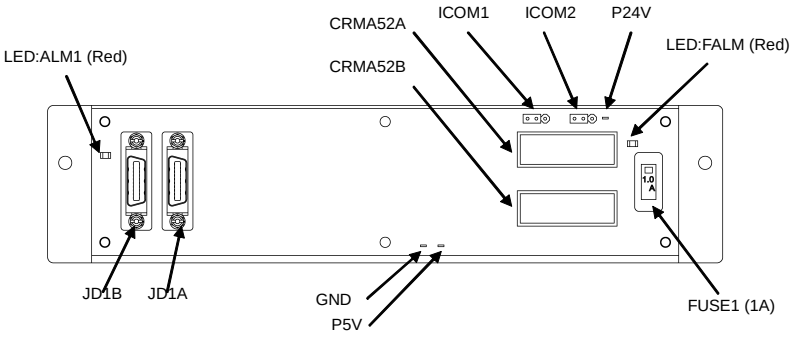

Total edition 02A or earlier

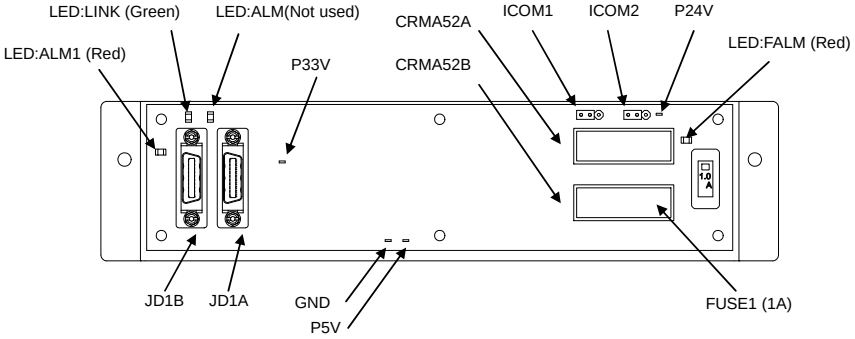

Total edition 04B or later

Fig.A (m) Process I/O Board MA

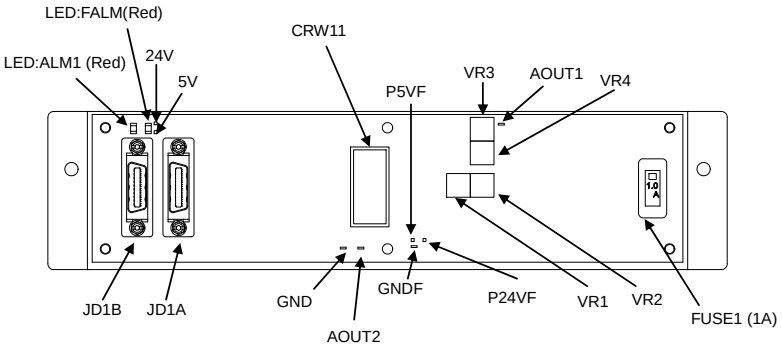

Total edition 02A or earlier

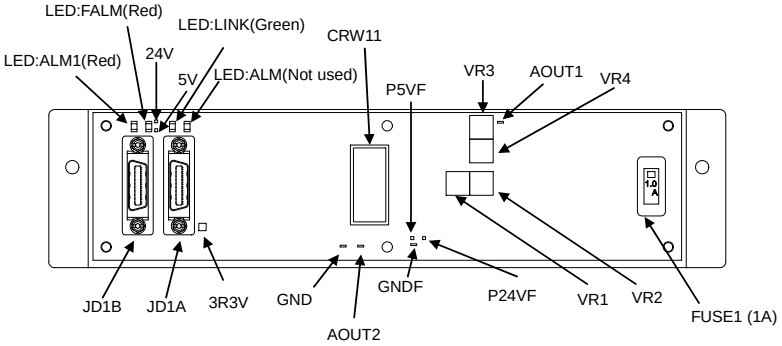

Total edition 04B or later

Fig.A (n) Process I/O Board MB

Operator's panel (A-cabinet, without TP disconnect)

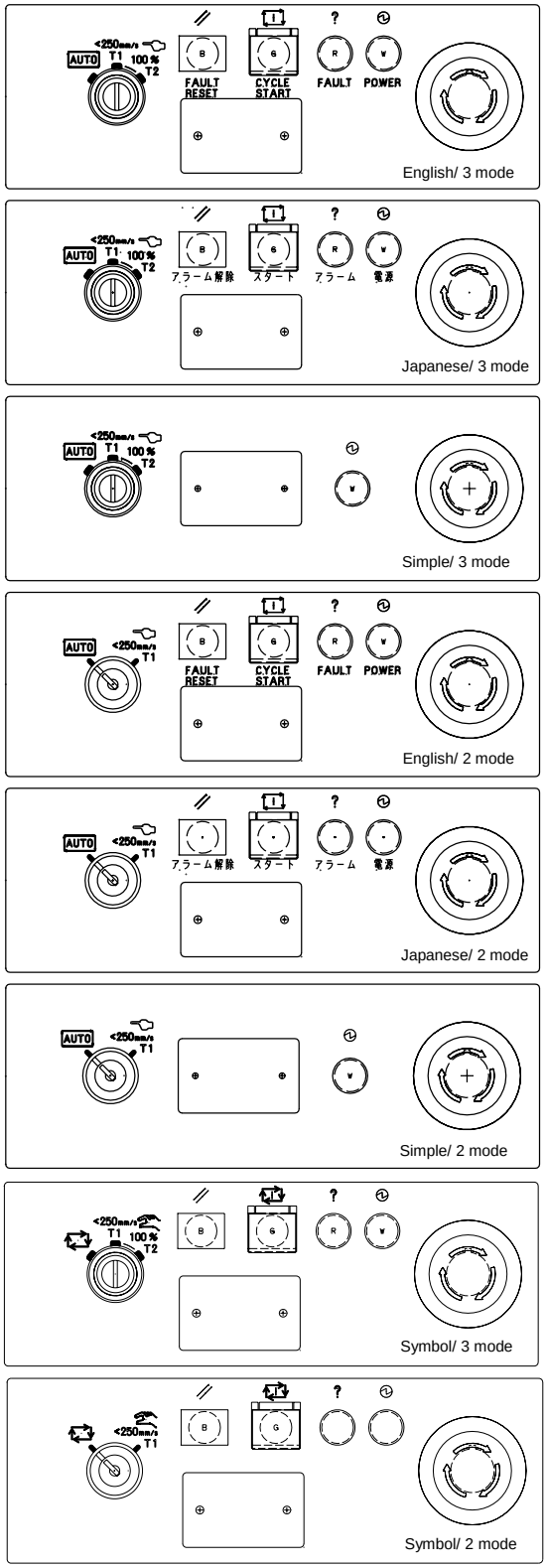

Operator's panel (A-cabinet, with TP disconnect)

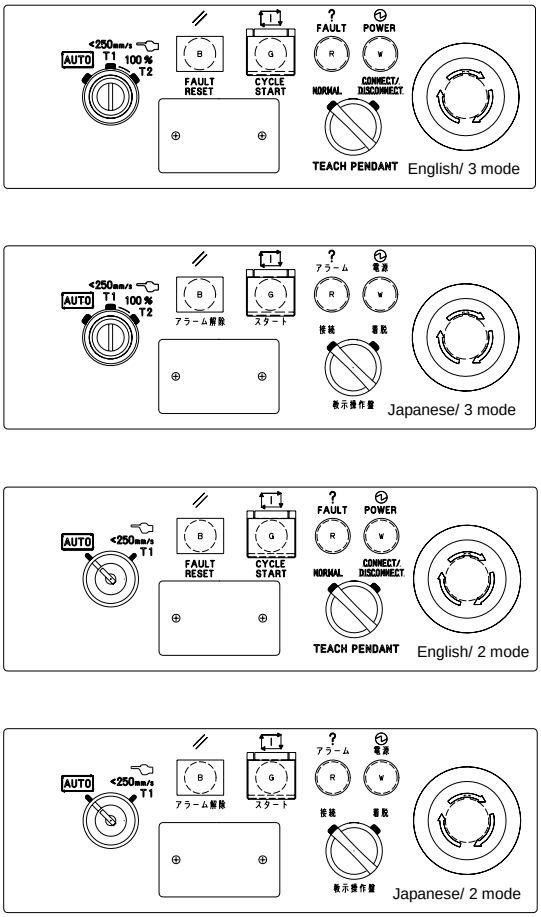

Fig.A (o) Operator's panel (A-cabinet)

Operator's panel (R-30*i*B, B-cabinet)

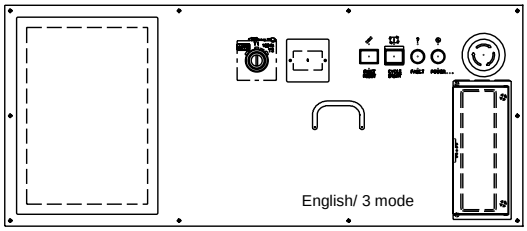

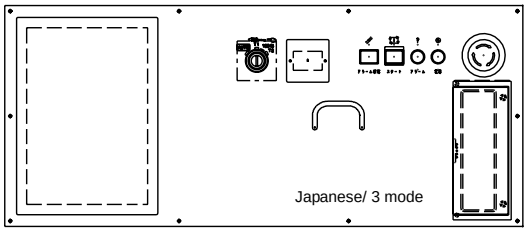

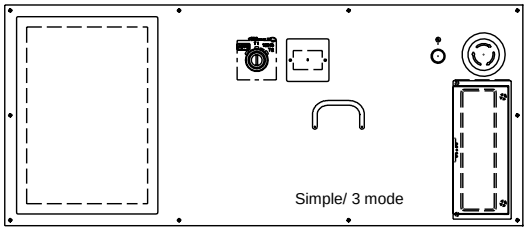

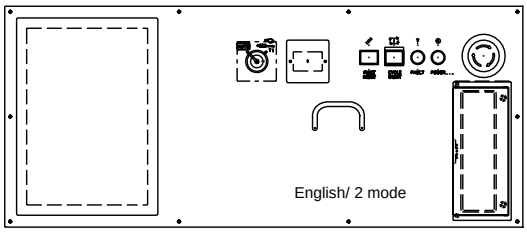

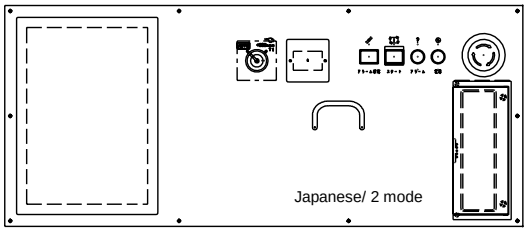

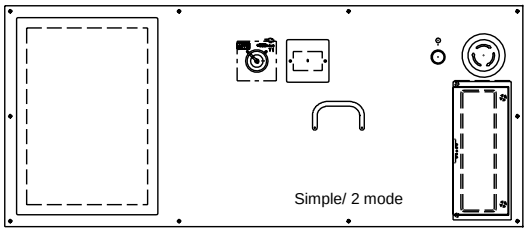

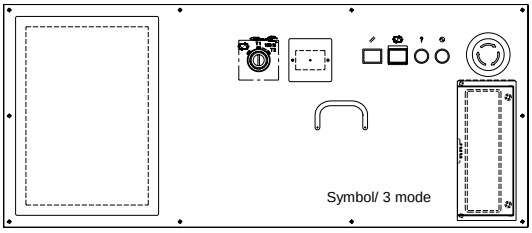

Operator's panel (R-30*i*B Plus, B-cabinet)

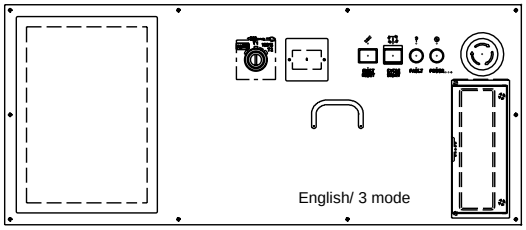

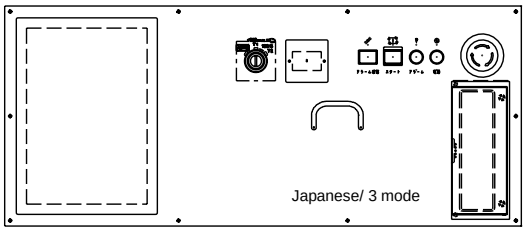

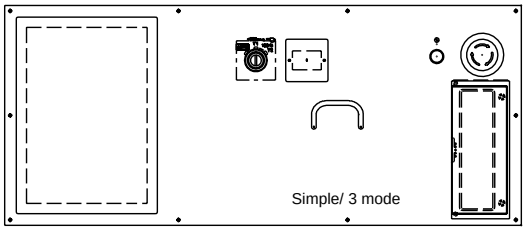

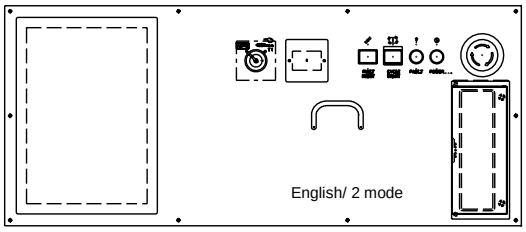

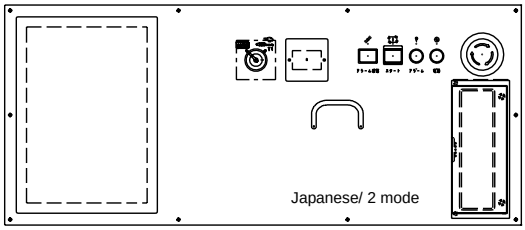

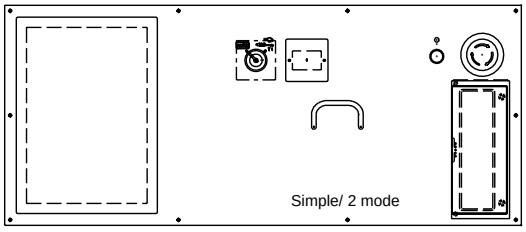

Fig.A (p) Operator's panel (B-cabinet)

Switch box (A-cabinet, without TP disconnect)

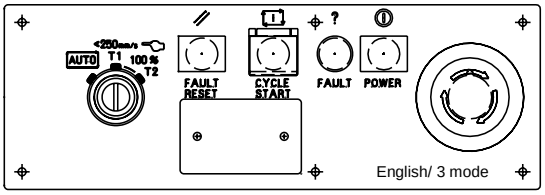

English/ 3 mode

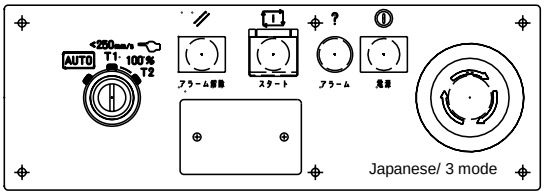

Japanese/ 3 mode

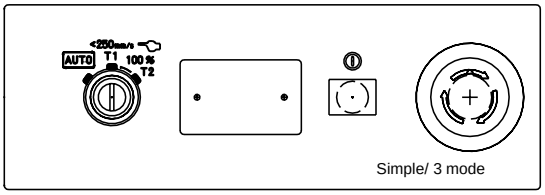

Simple/ 3 mode

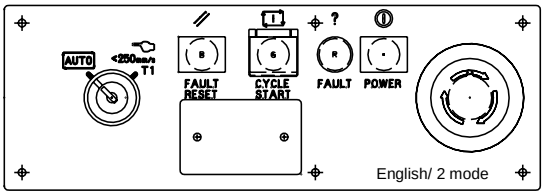

English/ 2 mode

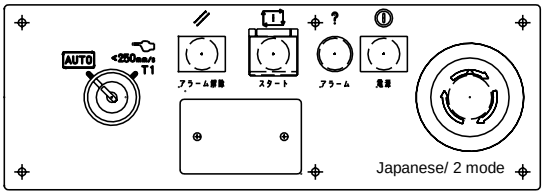

Japanese/ 2 mode

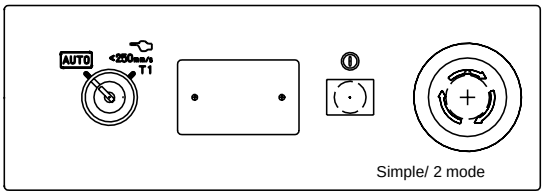

Simple/ 2 mode

Switch box (A-cabinet, with TP

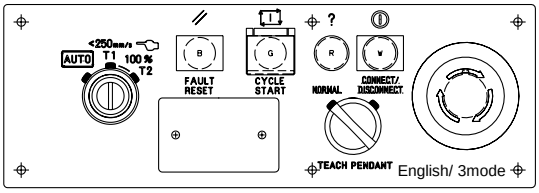

English/ 3mode

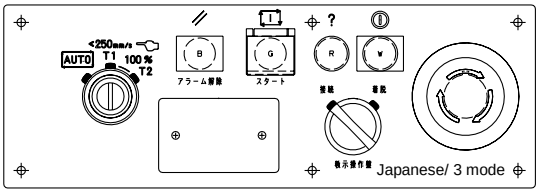

Japanese/ 3 mode

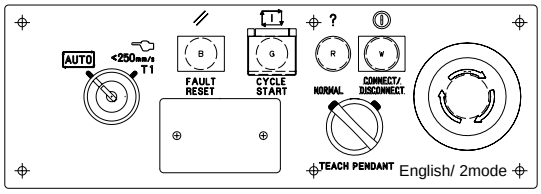

English/ 2mode

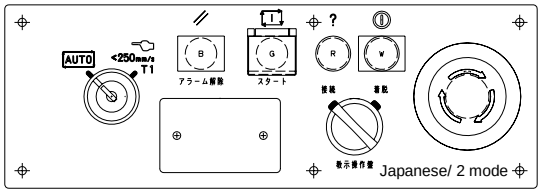

Japanese/ 2 mode

Fig.A (q) Switch box

Operator's panel for remote operation box (without TP disconnect)

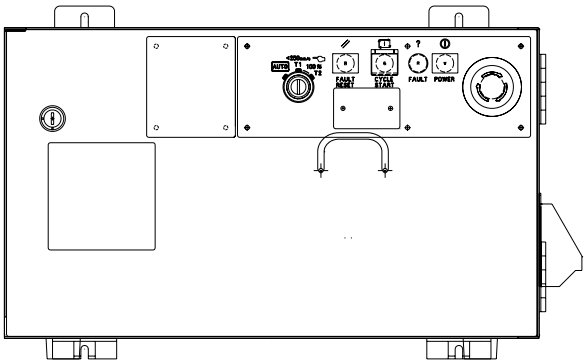

English/ 3 mode

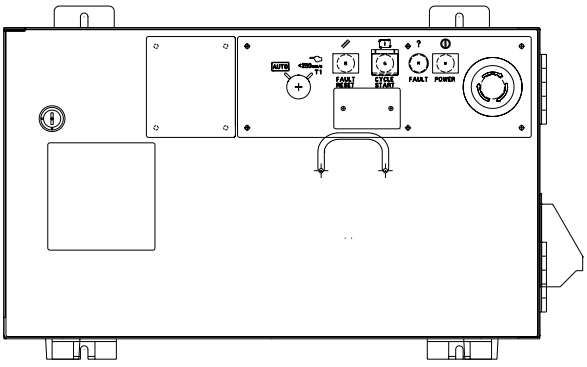

English/ 2 mode

Fig.A (r) Operator's panel for remote operation box

Cable No.	Name	Length (m)	Ordering Specification	FANUC Specification	Note
K30	Peripheral cable (Process I/O JA and JB) (A-cabinet)	10	A05B-2601-J200	A660-2006-T268#L10R33F	Process I/O (CRMA5) ~Peripheral device
		20	A05B-2601-J201	A660-2006-T268#L20R33F	
		30	A05B-2601-J202	A660-2006-T268#L30R33F	
	Peripheral cable (Process I/O JA and JB) (B-cabinet)	10	A05B-2603-J200	A660-2007-T378#L10R53B	
		20	A05B-2603-J201	A660-2007-T378#L20R53B	
		30	A05B-2603-J202	A660-2007-T378#L30R53B	
K31	Peripheral cable (Process I/O JA)	10	A05B-2603-J203	A660-2007-T379#L10R53B	Process I/O JA (CRMA6) ~Peripheral device
		20	A05B-2603-J204	A660-2007-T379#L20R53B	
		30	A05B-2603-J205	A660-2007-T379#L30R53B	
K32	Peripheral cable (Process I/O MA)	10	A05B-2601-J240	A660-2007-T375#L10R53A	Process I/O MA (CRMA52) ~Peripheral device
		20	A05B-2601-J241	A660-2007-T375#L20R53A	
		30	A05B-2601-J242	A660-2007-T375#L30R53A	
K34	Peripheral cable (Process I/O CA) (A-cabinet)	10	A05B-2601-J206	A660-2005-T122#L10R33E	Process I/O CA (CRM2) ~Peripheral device
		20	A05B-2601-J207	A660-2005-T122#L20R33E	
		30	A05B-2601-J208	A660-2005-T122#L30R33E	
	Peripheral cable (Process I/O CA) (B-cabinet)	10	A05B-2603-J206	A660-2005-T122#L10R03B	
		20	A05B-2603-J207	A660-2005-T122#L20R03B	
		30	A05B-2603-J208	A660-2005-T122#L30R03B	
K33	Welding machine cable (FANUC I/F/ Elbow connector) (Process I/O MB)	3	A05B-2601-J246	A660-2007-T377#L3R503A	Process I/O MB (CRW11) ~Welding machine
		7	A05B-2601-J247	A660-2007-T377#L7R503A	
		14	A05B-2601-J248	A660-2007-T377#L14R53A	
	Welding machine cable (FANUC I/F/ Straight connector) (Process I/O MB)	3	A05B-2601-J250	A660-2007-T816#L3R503A	
		7	A05B-2601-J251	A660-2007-T816#L7R503A	
		14	A05B-2601-J252	A660-2007-T816#L14R53A	
K95	Portable Brake release unit Robot connection cable	5	A05B-2450-J360	A660-2005-T559#L5R003	R-2000*i*B, M-2*i*A R-2000*i*C, M-3*i*A R-1000*i*A, M-710*i*C,M-410*i*B, M-420*i*A,M-421*i*A, M-410*i*C,M-900*i*A, M-900*i*B,M-2000*i*A
		10	A05B-2450-J361	A660-2005-T559#L10R03	
		5	A05B-2450-J370	A660-2005-T871#L5R003	F-200*i*B
		10	A05B-2450-J371	A660-2005-T871#L10R03	
		5	A05B-2525-J047	A660-2006-T881#L5R003	M-10*i*A, M-20*i*A, M-10*i*D, M-20*i*D, ARC Mate100*i*C, ARC Mate 120*i*C, ARC Mate 100*i*D, ARC Mate 120*i*D, CR-4*i*A, CR-7*i*A, CR-15*i*A,CR-35*i*A, LR Mate 200*i*D
		10	A05B-2525-J048	A660-2006-T881#L10R03	
		5	A05B-2525-J051	A660-2006-T888#L5R003	M-430*i*A/2PH,4FH
		10	A05B-2525-J052	A660-2006-T888#L10R03	
		5	A05B-2525-J049	A660-2006-T887#L5R003	M-430*i*A/2P
		10	A05B-2525-J050	A660-2006-T887#L10R03	
		5	A05B-2525-J035	A660-2006-T474#L5R003	
		10	A05B-2525-J036	A660-2006-T474#L10R03	
		5	A05B-2525-J045	A660-2006-T803#L5R003	Integrated type M-410*i*B, M-410*i*C
		10	A05B-2525-J046	A660-2006-T803#L10R03	

Cable No.	Name	Length (m)	Ordering Specification	FANUC Specification	Note
K96	Portable Brake release unit Aux. axis connection cable	5	A05B-2450-J366	A660-2005-T711#L5R003	Aux. Axis
		10	A05B-2450-J367	A660-2005-T711#L10R03	
K97	Portable Brake release unit Power cable	5	A05B-2450-J364	A05B-2450-D001	AC100-115V, AC200-240V, w/o Power plug
		10	A05B-2450-J365	A05B-2450-D002	AC100-115V, AC200-240V, w/o Power plug
		5	A05B-2525-J010	A05B-2525-D001	AC100-115V, w/ Power plug
		10	A05B-2525-J011	A05B-2525-D002	AC100-115V, w/ Power plug
K01	Power supply cable (A-cabinet) (Only for robot controller)	7	A05B-2601-J320	A660-8017-T712#L7R503	A(Standard,5.5sq, M5 terminal,30A)
		7	A05B-2601-J321	A660-8017-T790#L7R503	B(Standard,8sq, M8 terminal, AC200V, 60A)
		7	A05B-2601-J322	A660-8017-T791#L7R503	C(CE/NRTL,5.5sq, M5 terminal,30A)
	Power supply cable (B-cabinet) (Only for robot controller)	7	A05B-2114-J050	A660-8002-T896#L9R003	A(Standard,5.5sq, M5 terminal,30A)
		7	A05B-2452-J450	A660-8014-T588#L9R003	B(Standard,8sq, M8 terminal, 200V, 60A)
	DC 24V distribution cable		A05B-2601-J330	A05B-2601-D200	
			A05B-2660-J330		
K20	Teach pendant cable (A-cabinet)	10	A05B-2601-H320	A660-2007-T364#L10R53A	iPendant ~ controller (CRS36)
		20	A05B-2601-H321	A660-2007-T364#L20R53A	
	Teach pendant cable (B-cabinet)	10	A05B-2603-H320	A660-2007-T364#L10R53B	
		20	A05B-2603-H321	A660-2007-T364#L20R53B	
	Teach pendant cable (A-cabinet) (With Strain Relief)	10	A05B-2601-H310	A660-2008-T028#L10R53A	
		20	A05B-2601-H311	A660-2008-T028#L20R53A	
	Teach pendant cable (B-cabinet) (With Strain Relief)	10	A05B-2603-H310	A660-2008-T028#L10R53B	
		20	A05B-2603-H311	A660-2008-T028#L20R53B	
K21	Teach pendant cable (For switch box or Operator's panel, with TP disconnect)	10	A05B-2601-H330	A660-2007-T392#L10R53	iPendant~ switch box / Operator's panel
		20	A05B-2601-H331	A660-2007-T392#L20R53	
	Teach pendant cable (For switch box or Operator's panel, with TP disconnect, with Strain Relief)	10	A05B-2601-H340	A660-2008-T032#L10R53	
		20	A05B-2601-H341	A660-2008-T032#L20R53	

Cable No.	Name	Length (m)	Ordering Specification	FANUC Specification	Note
K22	Teach pendant cable (For Remote Operation box)	10	A05B-2601-H325	A660-2007-T364#L10R23D	iPendant~ Operation box
		20	A05B-2601-H326	A660-2007-T364#L20R23D	
	Teach pendant cable (For Remote Operation box, with Strain Relief)	10	A05B-2601-H315	A660-2008-T028#L10R23D	
		20	A05B-2601-H316	A660-2008-T028#L20R23D	
K27	Remote operation box connection cable	10	A05B-2626-H450	A05B-2626-D120	controller~Remote operation box
		20	A05B-2626-H451	A05B-2626-D121	
K26	Remote mode switch retrofit kit (A-cabinet)	7	A05B-2601-K100	A660-8018-T132#L7R503A	3 mode
		14	A05B-2601-K101	A660-8018-T132#L14R53A	3 mode
		20	A05B-2601-K102	A660-8018-T132#L20R53A	3 mode
		30	A05B-2601-K103	A660-8018-T132#L30R53A	3 mode
		7	A05B-2601-K110	A660-8018-T133#L7R503A	2 mode
		14	A05B-2601-K111	A660-8018-T133#L14R53A	2 mode
		20	A05B-2601-K112	A660-8018-T133#L20R53A	2 mode
		30	A05B-2601-K113	A660-8018-T133#L30R53A	2 mode
	Remote mode switch retrofit kit (B-cabinet)	7	A05B-2603-K100	A660-8018-T132#L7R503B	3 mode
		14	A05B-2603-K101	A660-8018-T132#L14R53B	3 mode
		20	A05B-2603-K102	A660-8018-T132#L20R53B	3 mode
		30	A05B-2603-K103	A660-8018-T132#L30R53B	3 mode
		7	A05B-2603-K110	A660-8018-T133#L7R503B	2 mode
		14	A05B-2603-K111	A660-8018-T133#L14R53B	2 mode
		20	A05B-2603-K112	A660-8018-T133#L20R53B	2 mode
		30	A05B-2603-K113	A660-8018-T133#L30R53B	2 mode
K25	Switch box connection cable	10	A05B-2601-H450	A05B-2601-D250	without TP disconnect
		20	A05B-2601-H451	A05B-2601-D251	without TP disconnect
		10	A05B-2601-H460	A05B-2601-D260	with TP disconnect
		20	A05B-2601-H461	A05B-2601-D261	with TP disconnect
K40	Robot connection cable Group 1 Non-flex (A-cabinet)	7	A05B-2610-H100	A660-2007-T299#L7R503A	RP1 cable
				A660-4005-T080#L7R503A	RM1 cable
				A660-8011-T182#L7R503	Earth cable
		14	A05B-2610-H101	A660-2007-T299#L14R53A	RP1 cable
				A660-4005-T080#L14R53A	RM1 cable
				A660-8011-T182#L14R53	Earth cable
		20	A05B-2610-H102	A660-2007-T299#L20R53A	RP1 cable
				A660-4005-T080#L20R53A	RM1 cable
				A660-8011-T182#L20R53	Earth cable
		30	A05B-2610-H103	A660-2007-T334#L30R53A	RP1 cable
				A660-4005-T080#L30R53A	RM1 cable
				A660-8011-T182#L30R53	Earth cable

Cable No.	Name	Length (m)	Ordering Specification	FANUC Specification	Note
K40	Robot connection cable Group 1 Flex (A-cabinet)	7	A05B-2610-H110	A660-2007-T335#L7R503A	RP1 cable
				A660-4005-T114#L7R503A	RM1 cable
				A660-8011-T182#L7R503	Earth cable
		14	A05B-2610-H111	A660-2007-T335#L14R53A	RP1 cable
				A660-4005-T114#L14R53A	RM1 cable
				A660-8011-T182#L14R53	Earth cable
		20	A05B-2610-H112	A660-2007-T335#L20R53A	RP1 cable
				A660-4005-T114#L20R53A	RM1 cable
				A660-8011-T182#L20R53	Earth cable
		30	A05B-2610-H113	A660-2007-T335#L30R53A	RP1 cable
				A660-4005-T114#L30R53A	RM1 cable
				A660-8011-T182#L30R53	Earth cable
	Robot connection cable Group 1 Non-flex, CE (A-cabinet)	7	A05B-2610-H200	A660-2007-T299#L7R503A	RP1 cable
				A660-4005-T113#L7R503A	RM1 cable
				A660-8011-T182#L7R503	Earth cable
		14	A05B-2610-H201	A660-2007-T299#L14R53A	RP1 cable
				A660-4005-T113#L14R53A	RM1 cable
				A660-8011-T182#L14R53	Earth cable
		20	A05B-2610-H202	A660-2007-T299#L20R53A	RP1 cable
				A660-4005-T113#L20R53A	RM1 cable
				A660-8011-T182#L20R53	Earth cable
		30	A05B-2610-H203	A660-2007-T334#L30R53A	RP1 cable
				A660-4005-T113#L30R53A	RM1 cable
				A660-8011-T182#L30R53	Earth cable
	Robot connection cable Group 1 Flex, CE (A-cabinet)	7	A05B-2610-H210	A660-2007-T335#L7R503A	RP1 cable
				A660-4005-T115#L7R503A	RM1 cable
				A660-8011-T182#L7R503	Earth cable
		14	A05B-2610-H211	A660-2007-T335#L14R53A	RP1 cable
				A660-4005-T115#L14R53A	RM1 cable
				A660-8011-T182#L14R53	Earth cable
		20	A05B-2610-H212	A660-2007-T335#L20R53A	RP1 cable
				A660-4005-T115#L20R53A	RM1 cable
				A660-8011-T182#L20R53	Earth cable
		30	A05B-2610-H213	A660-2007-T335#L30R53A	RP1 cable
				A660-4005-T115#L30R53A	RM1 cable
				A660-8011-T182#L30R53	Earth cable
	Robot connection cable Group 1 Non-flex (B-cabinet)	7	A05B-2610-H120	A660-2007-T299#L7R503B	RP1 cable
				A660-4005-T080#L7R503B	RM1 cable
				A660-8011-T182#L7R503	Earth cable
		14	A05B-2610-H121	A660-2007-T299#L14R53B	RP1 cable
				A660-4005-T080#L14R53B	RM1 cable
				A660-8011-T182#L14R53	Earth cable
		20	A05B-2610-H122	A660-2007-T299#L20R53B	RP1 cable
				A660-4005-T080#L20R53B	RM1 cable
				A660-8011-T182#L20R53	Earth cable
		30	A05B-2610-H123	A660-2007-T334#L30R53B	RP1 cable
				A660-4005-T080#L30R53B	RM1 cable
				A660-8011-T182#L30R53	Earth cable

Cable No.	Name	Length (m)	Ordering Specification	FANUC Specification	Note
K40	Robot connection cable Group 1 Flex (B-cabinet)	7	A05B-2610-H130	A660-2007-T335#L7R503B	RP1 cable
				A660-4005-T114#L7R503B	RM1 cable
				A660-8011-T182#L7R503	Earth cable
		14	A05B-2610-H131	A660-2007-T335#L14R53B	RP1 cable
				A660-4005-T114#L14R53B	RM1 cable
				A660-8011-T182#L14R53	Earth cable
		20	A05B-2610-H132	A660-2007-T335#L20R53B	RP1 cable
				A660-4005-T114#L20R53B	RM1 cable
				A660-8011-T182#L20R53	Earth cable
		30	A05B-2610-H133	A660-2007-T335#L30R53B	RP1 cable
				A660-4005-T114#L30R53B	RM1 cable
				A660-8011-T182#L30R53	Earth cable
	Robot connection cable Group 1 Non-flex, CE (B-cabinet)	7	A05B-2610-H220	A660-2007-T299#L7R503B	RP1 cable
				A660-4005-T113#L7R503B	RM1 cable
				A660-8011-T182#L7R503	Earth cable
		14	A05B-2610-H221	A660-2007-T299#L14R53B	RP1 cable
				A660-4005-T113#L14R53B	RM1 cable
				A660-8011-T182#L14R53	Earth cable
		20	A05B-2610-H222	A660-2007-T299#L20R53B	RP1 cable
				A660-4005-T113#L20R53B	RM1 cable
				A660-8011-T182#L20R53	Earth cable
		30	A05B-2610-H223	A660-2007-T334#L30R53B	RP1 cable
				A660-4005-T113#L30R53B	RM1 cable
				A660-8011-T182#L30R53	Earth cable
	Robot connection cable Group 1 Flex, CE (B-cabinet)	7	A05B-2610-H230	A660-2007-T335#L7R503B	RP1 cable
				A660-4005-T115#L7R503B	RM1 cable
				A660-8011-T182#L7R503	Earth cable
		14	A05B-2610-H231	A660-2007-T335#L14R53B	RP1 cable
				A660-4005-T115#L14R53B	RM1 cable
				A660-8011-T182#L14R53	Earth cable
		20	A05B-2610-H232	A660-2007-T335#L20R53B	RP1 cable
				A660-4005-T115#L20R53B	RM1 cable
				A660-8011-T182#L20R53	Earth cable
		30	A05B-2610-H233	A660-2007-T335#L30R53B	RP1 cable
				A660-4005-T115#L30R53B	RM1 cable
				A660-8011-T182#L30R53	Earth cable
K41	Robot connection cable Group 2 Non-flex (A-cabinet)	7	A05B-2619-H100	A660-2007-T299#L7R503A	RP1 cable
				A660-4005-T188#L7R503A	RM1 cable
				A660-8014-T130#L7R503	Earth cable
		14	A05B-2619-H101	A660-2007-T299#L14R53A	RP1 cable
				A660-4005-T188#L14R53A	RM1 cable
				A660-8014-T130#L14R53	Earth cable
		20	A05B-2619-H102	A660-2007-T299#L20R53A	RP1 cable
				A660-4005-T188#L20R53A	RM1 cable
				A660-8014-T130#L20R53	Earth cable
		30	A05B-2619-H103	A660-2007-T334#L30R53A	RP1 cable
				A660-4005-T188#L30R53A	RM1 cable
				A660-8014-T130#L30R53	Earth cable

Cable No.	Name	Length (m)	Ordering Specification	FANUC Specification	Note
K41	Robot connection cable Group 2 Non-flex, CE (A-cabinet)	7	A05B-2619-H200	A660-2007-T299#L7R503A	RP1 cable
				A660-4005-T190#L7R503A	RM1 cable
				A660-8014-T130#L7R503	Earth cable
		14	A05B-2619-H201	A660-2007-T299#L14R53A	RP1 cable
				A660-4005-T190#L14R53A	RM1 cable
				A660-8014-T130#L14R53	Earth cable
		20	A05B-2619-H202	A660-2007-T299#L20R53A	RP1 cable
				A660-4005-T190#L20R53A	RM1 cable
				A660-8014-T130#L20R53	Earth cable
		30	A05B-2619-H203	A660-2007-T334#L30R53A	RP1 cable
				A660-4005-T190#L30R53A	RM1 cable
				A660-8014-T130#L30R53	Earth cable
	Robot connection cable Group 2 Non-flex (B-cabinet)	7	A05B-2619-H120	A660-2007-T299#L7R503B	RP1 cable
				A660-4005-T188#L7R503B	RM1 cable
				A660-8014-T130#L7R503	Earth cable
		14	A05B-2619-H121	A660-2007-T299#L14R53B	RP1 cable
				A660-4005-T188#L14R53B	RM1 cable
				A660-8014-T130#L14R53	Earth cable
		20	A05B-2619-H122	A660-2007-T299#L20R53B	RP1 cable
				A660-4005-T188#L20R53B	RM1 cable
				A660-8014-T130#L20R53	Earth cable
		30	A05B-2619-H123	A660-2007-T334#L30R53B	RP1 cable
				A660-4005-T188#L30R53B	RM1 cable
				A660-8014-T130#L30R53	Earth cable
	Robot connection cable Group 2 Non-flex, CE (B-cabinet)	7	A05B-2619-H220	A660-2007-T299#L7R503B	RP1 cable
				A660-4005-T190#L7R503B	RM1 cable
				A660-8014-T130#L7R503	Earth cable
		14	A05B-2619-H221	A660-2007-T299#L14R53B	RP1 cable
				A660-4005-T190#L14R53B	RM1 cable
				A660-8014-T130#L14R53	Earth cable
		20	A05B-2619-H222	A660-2007-T299#L20R53B	RP1 cable
				A660-4005-T190#L20R53B	RM1 cable
				A660-8014-T130#L20R53	Earth cable
		30	A05B-2619-H223	A660-2007-T334#L30R53B	RP1 cable
				A660-4005-T190#L30R53B	RM1 cable
				A660-8014-T130#L30R53	Earth cable
K42	Robot connection cable Group 3 Non-flex (A-cabinet)	7	A05B-2612-H100	A660-2007-T299#L7R503A	RP1 cable
				A660-4005-T123#L7R503A	RM1 cable
				A660-4005-T124#L7R503A	RM2 cable
				A660-8011-T182#L7R503	Earth cable
		14	A05B-2612-H101	A660-2007-T299#L14R53A	RP1 cable
				A660-4005-T123#L14R53A	RM1 cable
				A660-4005-T124#L14R53A	RM2 cable
				A660-8011-T182#L14R53	Earth cable
		20	A05B-2612-H102	A660-2007-T299#L20R53A	RP1 cable
				A660-4005-T123#L20R53A	RM1 cable
				A660-4005-T124#L20R53A	RM2 cable
				A660-8011-T182#L20R53	Earth cable

Cable No.	Name	Length (m)	Ordering Specification	FANUC Specification	Note
K42		30	A05B-2612-H103	A660-2007-T334#L30R53A	RP1 cable
				A660-4005-T123#L30R53A	RM1 cable
				A660-4005-T124#L30R53A	RM2 cable
				A660-8011-T182#L30R53	Earth cable
		2	A05B-2612-H104	A660-2007-T299#L2R503A	RP1 cable
				A660-4005-T123#L2R503A	RM1 cable
				A660-4005-T124#L2R503A	RM2 cable
				A660-8011-T182#L2R503	Earth cable
	Robot connection cable Group 3 Flex (A-cabinet)	7	A05B-2612-H110	A660-2007-T335#L7R503A	RP1 cable
				A660-4005-T127#L7R503A	RM1 cable
				A660-4005-T128#L7R503A	RM2 cable
				A660-8011-T182#L7R503	Earth cable
		14	A05B-2612-H111	A660-2007-T335#L14R53A	RP1 cable
				A660-4005-T127#L14R53A	RM1 cable
				A660-4005-T128#L14R53A	RM2 cable
				A660-8011-T182#L14R53	Earth cable
		20	A05B-2612-H112	A660-2007-T335#L20R53A	RP1 cable
				A660-4005-T127#L20R53A	RM1 cable
				A660-4005-T128#L20R53A	RM2 cable
				A660-8011-T182#L20R53	Earth cable
		30	A05B-2612-H113	A660-2007-T335#L30R53A	RP1 cable
				A660-4005-T127#L30R53A	RM1 cable
				A660-4005-T128#L30R53A	RM2 cable
				A660-8011-T182#L30R53	Earth cable
	Robot connection cable Group 3 Non-flex, CE (A-cabinet)	7	A05B-2612-H200	A660-2007-T299#L7R503A	RP1 cable
				A660-4005-T125#L7R503A	RM1 cable
				A660-4005-T126#L7R503A	RM2 cable
				A660-8011-T182#L7R503	Earth cable
		14	A05B-2612-H201	A660-2007-T299#L14R53A	RP1 cable
				A660-4005-T125#L14R53A	RM1 cable
				A660-4005-T126#L14R53A	RM2 cable
				A660-8011-T182#L14R53	Earth cable
		20	A05B-2612-H202	A660-2007-T299#L20R53A	RP1 cable
				A660-4005-T125#L20R53A	RM1 cable
				A660-4005-T126#L20R53A	RM2 cable
				A660-8011-T182#L20R53	Earth cable
		30	A05B-2612-H203	A660-2007-T334#L30R53A	RP1 cable
				A660-4005-T125#L30R53A	RM1 cable
				A660-4005-T126#L30R53A	RM2 cable
				A660-8011-T182#L30R53	Earth cable
		2	A05B-2612-H204	A660-2007-T299#L2R503A	RP1 cable
				A660-4005-T125#L2R503A	RM1 cable
				A660-4005-T126#L2R503A	RM2 cable
				A660-8011-T182#L2R503	Earth cable
	Robot connection cable Group 3 Flex, CE (A-cabinet)	7	A05B-2612-H210	A660-2007-T335#L7R503A	RP1 cable
				A660-4005-T129#L7R503A	RM1 cable
				A660-4005-T130#L7R503A	RM2 cable
				A660-8011-T182#L7R503	Earth cable
		14	A05B-2612-H211	A660-2007-T335#L14R53A	RP1 cable
				A660-4005-T129#L14R53A	RM1 cable
				A660-4005-T130#L14R53A	RM2 cable
				A660-8011-T182#L14R53	Earth cable

Cable No.	Name	Length (m)	Ordering Specification	FANUC Specification	Note
K42		20	A05B-2612-H212	A660-2007-T335#L20R53A	RP1 cable
				A660-4005-T129#L20R53A	RM1 cable
				A660-4005-T130#L20R53A	RM2 cable
				A660-8011-T182#L20R53	Earth cable
		30	A05B-2612-H213	A660-2007-T335#L30R53A	RP1 cable
				A660-4005-T129#L30R53A	RM1 cable
				A660-4005-T130#L30R53A	RM2 cable
				A660-8011-T182#L30R53	Earth cable
	Robot connection cable Group 3 Non-flex (B-cabinet)	7	A05B-2612-H120	A660-2007-T299#L7R503B	RP1 cable
				A660-4005-T123#L7R503B	RM1 cable
				A660-4005-T124#L7R503B	RM2 cable
				A660-8011-T182#L7R503	Earth cable
		14	A05B-2612-H121	A660-2007-T299#L14R53B	RP1 cable
				A660-4005-T123#L14R53B	RM1 cable
				A660-4005-T124#L14R53B	RM2 cable
				A660-8011-T182#L14R53	Earth cable
		20	A05B-2612-H122	A660-2007-T299#L20R53B	RP1 cable
				A660-4005-T123#L20R53B	RM1 cable
				A660-4005-T124#L20R53B	RM2 cable
				A660-8011-T182#L20R53	Earth cable
		30	A05B-2612-H123	A660-2007-T334#L30R53B	RP1 cable
				A660-4005-T123#L30R53B	RM1 cable
				A660-4005-T124#L30R53B	RM2 cable
				A660-8011-T182#L30R53	Earth cable
	Robot connection cable Group 3 Flex (B-cabinet)	7	A05B-2612-H130	A660-2007-T335#L7R503B	RP1 cable
				A660-4005-T127#L7R503B	RM1 cable
				A660-4005-T128#L7R503B	RM2 cable
				A660-8011-T182#L7R503	Earth cable
		14	A05B-2612-H131	A660-2007-T335#L14R53B	RP1 cable
				A660-4005-T127#L14R53B	RM1 cable
				A660-4005-T128#L14R53B	RM2 cable
				A660-8011-T182#L14R53	Earth cable
		20	A05B-2612-H132	A660-2007-T335#L20R53B	RP1 cable
				A660-4005-T127#L20R53B	RM1 cable
				A660-4005-T128#L20R53B	RM2 cable
				A660-8011-T182#L20R53	Earth cable
		30	A05B-2612-H133	A660-2007-T335#L30R53B	RP1 cable
				A660-4005-T127#L30R53B	RM1 cable
				A660-4005-T128#L30R53B	RM2 cable
				A660-8011-T182#L30R53	Earth cable
	Robot connection cable Group 3 Non-flex, CE (B-cabinet)	7	A05B-2612-H220	A660-2007-T299#L7R503B	RP1 cable
				A660-4005-T125#L7R503B	RM1 cable
				A660-4005-T126#L7R503B	RM2 cable
				A660-8011-T182#L7R503	Earth cable
		14	A05B-2612-H221	A660-2007-T299#L14R53B	RP1 cable
				A660-4005-T125#L14R53B	RM1 cable
				A660-4005-T126#L14R53B	RM2 cable
				A660-8011-T182#L14R53	Earth cable

Cable No.	Name	Length (m)	Ordering Specification	FANUC Specification	Note
K42		20	A05B-2612-H222	A660-2007-T299#L20R53B	RP1 cable
				A660-4005-T125#L20R53B	RM1 cable
				A660-4005-T126#L20R53B	RM2 cable
				A660-8011-T182#L20R53	Earth cable
		30	A05B-2612-H223	A660-2007-T334#L30R53B	RP1 cable
				A660-4005-T125#L30R53B	RM1 cable
				A660-4005-T126#L30R53B	RM2 cable
				A660-8011-T182#L30R53	Earth cable
	Robot connection cable Group 3 Flex, CE (B-cabinet)	7	A05B-2612-H230	A660-2007-T335#L7R503B	RP1 cable
				A660-4005-T129#L7R503B	RM1 cable
				A660-4005-T130#L7R503B	RM2 cable
				A660-8011-T182#L7R503	Earth cable
		14	A05B-2612-H231	A660-2007-T335#L14R53B	RP1 cable
				A660-4005-T129#L14R53B	RM1 cable
				A660-4005-T130#L14R53B	RM2 cable
				A660-8011-T182#L14R53	Earth cable
		20	A05B-2612-H232	A660-2007-T335#L20R53B	RP1 cable
				A660-4005-T129#L20R53B	RM1 cable
				A660-4005-T130#L20R53B	RM2 cable
				A660-8011-T182#L20R53	Earth cable
		30	A05B-2612-H233	A660-2007-T335#L30R53B	RP1 cable
				A660-4005-T129#L30R53B	RM1 cable
				A660-4005-T130#L30R53B	RM2 cable
				A660-8011-T182#L30R53	Earth cable
K43	Robot connection cable Group 4 Non-flex (A-cabinet)	7	A05B-2613-H100	A660-2007-T299#L7R503A	RP1 cable
				A660-4005-T084#L7R503A	RM1 cable
				A660-4005-T085#L7R503A	RM2 cable
				A660-8011-T182#L7R503	Earth cable
		14	A05B-2613-H101	A660-2007-T299#L14R53A	RP1 cable
				A660-4005-T084#L14R53A	RM1 cable
				A660-4005-T085#L14R53A	RM2 cable
				A660-8011-T182#L14R53	Earth cable
		20	A05B-2613-H102	A660-2007-T299#L20R53A	RP1 cable
				A660-4005-T084#L20R53A	RM1 cable
				A660-4005-T085#L20R53A	RM2 cable
				A660-8011-T182#L20R53	Earth cable
		30	A05B-2613-H103	A660-2007-T334#L30R53A	RP1 cable
				A660-4005-T084#L30R53A	RM1 cable
				A660-4005-T085#L30R53A	RM2 cable
				A660-8011-T182#L30R53	Earth cable
	Robot connection cable Group 4 Flex (A-cabinet)	7	A05B-2613-H110	A660-2007-T335#L7R503A	RP1 cable
				A660-4005-T131#L7R503A	RM1 cable
				A660-4005-T132#L7R503A	RM2 cable
				A660-8011-T182#L7R503	Earth cable
		14	A05B-2613-H111	A660-2007-T335#L14R53A	RP1 cable
				A660-4005-T131#L14R53A	RM1 cable
				A660-4005-T132#L14R53A	RM2 cable
				A660-8011-T182#L14R53	Earth cable
		20	A05B-2613-H112	A660-2007-T335#L20R53A	RP1 cable
				A660-4005-T131#L20R53A	RM1 cable
				A660-4005-T132#L20R53A	RM2 cable
				A660-8011-T182#L20R53	Earth cable

Cable No.	Name	Length (m)	Ordering Specification	FANUC Specification	Note
K43	Robot connection cable Group 4 Flex (A-cabinet)	30	A05B-2613-H113	A660-2007-T335#L30R53A	RP1 cable
				A660-4005-T131#L30R53A	RM1 cable
				A660-4005-T132#L30R53A	RM2 cable
				A660-8011-T182#L30R53	Earth cable
	Robot connection cable Group 4 Non-flex, CE (A-cabinet)	7	A05B-2613-H200	A660-2007-T299#L7R503A	RP1 cable
				A660-4005-T111#L7R503A	RM1 cable
				A660-4005-T112#L7R503A	RM2 cable
				A660-8011-T182#L7R503	Earth cable
		14	A05B-2613-H201	A660-2007-T299#L14R53A	RP1 cable
				A660-4005-T111#L14R53A	RM1 cable
				A660-4005-T112#L14R53A	RM2 cable
				A660-8011-T182#L14R53	Earth cable
		20	A05B-2613-H202	A660-2007-T299#L20R53A	RP1 cable
				A660-4005-T111#L20R53A	RM1 cable
				A660-4005-T112#L20R53A	RM2 cable
				A660-8011-T182#L20R53	Earth cable
		30	A05B-2613-H203	A660-2007-T334#L30R53A	RP1 cable
				A660-4005-T111#L30R53A	RM1 cable
				A660-4005-T112#L30R53A	RM2 cable
				A660-8011-T182#L30R53	Earth cable
	Robot connection cable Group 4 Flex, CE (A-cabinet)	7	A05B-2613-H210	A660-2007-T335#L7R503A	RP1 cable
				A660-4005-T133#L7R503A	RM1 cable
				A660-4005-T134#L7R503A	RM2 cable
				A660-8011-T182#L7R503	Earth cable
		14	A05B-2613-H211	A660-2007-T335#L14R53A	RP1 cable
				A660-4005-T133#L14R53A	RM1 cable
				A660-4005-T134#L14R53A	RM2 cable
				A660-8011-T182#L14R53	Earth cable
		20	A05B-2613-H212	A660-2007-T335#L20R53A	RP1 cable
				A660-4005-T133#L20R53A	RM1 cable
				A660-4005-T134#L20R53A	RM2 cable
				A660-8011-T182#L20R53	Earth cable
		30	A05B-2613-H213	A660-2007-T335#L30R53A	RP1 cable
				A660-4005-T133#L30R53A	RM1 cable
				A660-4005-T134#L30R53A	RM2 cable
				A660-8011-T182#L30R53	Earth cable
	Robot connection cable Group 4 Non-flex (B-cabinet)	7	A05B-2613-H120	A660-2007-T299#L7R503B	RP1 cable
				A660-4005-T084#L7R503B	RM1 cable
				A660-4005-T085#L7R503B	RM2 cable
				A660-8011-T182#L7R503	Earth cable
		14	A05B-2613-H121	A660-2007-T299#L14R53B	RP1 cable
				A660-4005-T084#L14R53B	RM1 cable
				A660-4005-T085#L14R53B	RM2 cable
				A660-8011-T182#L14R53	Earth cable
		20	A05B-2613-H122	A660-2007-T299#L20R53B	RP1 cable
				A660-4005-T084#L20R53B	RM1 cable
				A660-4005-T085#L20R53B	RM2 cable
				A660-8011-T182#L20R53	Earth cable
		30	A05B-2613-H123	A660-2007-T334#L30R53B	RP1 cable
				A660-4005-T084#L30R53B	RM1 cable
				A660-4005-T085#L30R53B	RM2 cable
				A660-8011-T182#L30R53	Earth cable

Cable No.	Name	Length (m)	Ordering Specification	FANUC Specification	Note
K43	Robot connection cable Group 4 Flex (B-cabinet)	7	A05B-2613-H130	A660-2007-T335#L7R503B	RP1 cable
				A660-4005-T131#L7R503B	RM1 cable
				A660-4005-T132#L7R503B	RM2 cable
				A660-8011-T182#L7R503	Earth cable
		14	A05B-2613-H131	A660-2007-T335#L14R53B	RP1 cable
				A660-4005-T131#L14R53B	RM1 cable
				A660-4005-T132#L14R53B	RM2 cable
				A660-8011-T182#L14R53	Earth cable
		20	A05B-2613-H132	A660-2007-T335#L20R53B	RP1 cable
				A660-4005-T131#L20R53B	RM1 cable
				A660-4005-T132#L20R53B	RM2 cable
				A660-8011-T182#L20R53	Earth cable
		30	A05B-2613-H133	A660-2007-T335#L30R53B	RP1 cable
				A660-4005-T131#L30R53B	RM1 cable
				A660-4005-T132#L30R53B	RM2 cable
				A660-8011-T182#L30R53	Earth cable
	Robot connection cable Group 4 Non-flex, CE (B-cabinet)	7	A05B-2613-H220	A660-2007-T299#L7R503B	RP1 cable
				A660-4005-T111#L7R503B	RM1 cable
				A660-4005-T112#L7R503B	RM2 cable
				A660-8011-T182#L7R503	Earth cable
		14	A05B-2613-H221	A660-2007-T299#L14R53B	RP1 cable
				A660-4005-T111#L14R53B	RM1 cable
				A660-4005-T112#L14R53B	RM2 cable
				A660-8011-T182#L14R53	Earth cable
		20	A05B-2613-H222	A660-2007-T299#L20R53B	RP1 cable
				A660-4005-T111#L20R53B	RM1 cable
				A660-4005-T112#L20R53B	RM2 cable
				A660-8011-T182#L20R53	Earth cable
		30	A05B-2613-H223	A660-2007-T334#L30R53B	RP1 cable
				A660-4005-T111#L30R53B	RM1 cable
				A660-4005-T112#L30R53B	RM2 cable
				A660-8011-T182#L30R53	Earth cable
	Robot connection cable Group 4 Flex, CE (B-cabinet)	7	A05B-2613-H230	A660-2007-T335#L7R503B	RP1 cable
				A660-4005-T133#L7R503B	RM1 cable
				A660-4005-T134#L7R503B	RM2 cable
				A660-8011-T182#L7R503	Earth cable
		14	A05B-2613-H231	A660-2007-T335#L14R53B	RP1 cable
				A660-4005-T133#L14R53B	RM1 cable
				A660-4005-T134#L14R53B	RM2 cable
				A660-8011-T182#L14R53	Earth cable
		20	A05B-2613-H232	A660-2007-T335#L20R53B	RP1 cable
				A660-4005-T133#L20R53B	RM1 cable
				A660-4005-T134#L20R53B	RM2 cable
				A660-8011-T182#L20R53	Earth cable
		30	A05B-2613-H233	A660-2007-T335#L30R53B	RP1 cable
				A660-4005-T133#L30R53B	RM1 cable
				A660-4005-T134#L30R53B	RM2 cable
				A660-8011-T182#L30R53	Earth cable

Cable No.	Name	Length (m)	Ordering Specification	FANUC Specification	Note
K44	Robot connection cable Group 5 Non-flex (B-cabinet)	7	A05B-2614-H120	A660-4005-T135#L7R503B	RP1 cable
				A660-4005-T251#L7R503B	RM1 cable
				A660-4005-T252#L7R503B	RM2 cable
				A660-8011-T182#L7R503	Earth cable
		14	A05B-2614-H121	A660-4005-T135#L14R53B	RP1 cable
				A660-4005-T251#L14R53B	RM1 cable
				A660-4005-T252#L14R53B	RM2 cable
				A660-8011-T182#L14R53	Earth cable
		20	A05B-2614-H122	A660-4005-T135#L20R53B	RP1 cable
				A660-4005-T251#L20R53B	RM1 cable
				A660-4005-T252#L20R53B	RM2 cable
				A660-8011-T182#L20R53	Earth cable
		30	A05B-2614-H123	A660-4005-T136#L30R53B	RP1 cable
				A660-4005-T251#L30R53B	RM1 cable
				A660-4005-T252#L30R53B	RM2 cable
				A660-8011-T182#L30R53	Earth cable
	Robot connection cable Group 5 Flex (B-cabinet)	7	A05B-2614-H130	A660-4005-T137#L7R503B	RP1 cable
				A660-4005-T253#L7R503B	RM1 cable
				A660-4005-T254#L7R503B	RM2 cable
				A660-8011-T182#L7R503	Earth cable
		14	A05B-2614-H131	A660-4005-T137#L14R53B	RP1 cable
				A660-4005-T253#L14R53B	RM1 cable
				A660-4005-T254#L14R53B	RM2 cable
				A660-8011-T182#L14R53	Earth cable
		20	A05B-2614-H132	A660-4005-T137#L20R53B	RP1 cable
				A660-4005-T253#L20R53B	RM1 cable
				A660-4005-T254#L20R53B	RM2 cable
				A660-8011-T182#L20R53	Earth cable
		30	A05B-2614-H133	A660-4005-T137#L30R53B	RP1 cable
				A660-4005-T253#L30R53B	RM1 cable
				A660-4005-T254#L30R53B	RM2 cable
				A660-8011-T182#L30R53	Earth cable
	Robot connection cable Group 5 Non-flex, CE (B-cabinet)	7	A05B-2614-H220	A660-4005-T135#L7R503B	RP1 cable
				A660-4005-T139#L7R503B	RM1 cable
				A660-4005-T140#L7R503B	RM2 cable
				A660-8011-T182#L7R503	Earth cable
		14	A05B-2614-H221	A660-4005-T135#L14R53B	RP1 cable
				A660-4005-T139#L14R53B	RM1 cable
				A660-4005-T140#L14R53B	RM2 cable
				A660-8011-T182#L14R53	Earth cable
		20	A05B-2614-H222	A660-4005-T135#L20R53B	RP1 cable
				A660-4005-T139#L20R53B	RM1 cable
				A660-4005-T140#L20R53B	RM2 cable
				A660-8011-T182#L20R53	Earth cable
		30	A05B-2614-H223	A660-4005-T136#L30R53B	RP1 cable
				A660-4005-T139#L30R53B	RM1 cable
				A660-4005-T140#L30R53B	RM2 cable
				A660-8011-T182#L30R53	Earth cable

Cable No.	Name	Length (m)	Ordering Specification	FANUC Specification	Note
K44	Robot connection cable Group 5 Flex, CE (B-cabinet)	7	A05B-2614-H230	A660-4005-T137#L7R503B	RP1 cable
				A660-4005-T141#L7R503B	RM1 cable
				A660-4005-T142#L7R503B	RM2 cable
				A660-8011-T182#L7R503	Earth cable
		14	A05B-2614-H231	A660-4005-T137#L14R53B	RP1 cable
				A660-4005-T141#L14R53B	RM1 cable
				A660-4005-T142#L14R53B	RM2 cable
				A660-8011-T182#L14R53	Earth cable
		20	A05B-2614-H232	A660-4005-T137#L20R53B	RP1 cable
				A660-4005-T141#L20R53B	RM1 cable
				A660-4005-T142#L20R53B	RM2 cable
				A660-8011-T182#L20R53	Earth cable
		30	A05B-2614-H233	A660-4005-T137#L30R53B	RP1 cable
				A660-4005-T141#L30R53B	RM1 cable
				A660-4005-T142#L30R53B	RM2 cable
				A660-8011-T182#L30R53	Earth cable
K98	Connection cable for Accuracy /Stiffness enhancement option Non-flex	7	A05B-2614-J120	A660-4005-T425#L7R603A	
		14	A05B-2614-J121	A660-4005-T425#L14R63A	
		20	A05B-2614-J122	A660-4005-T425#L20R63A	
		30	A05B-2614-J123	A660-4005-T425#L30R63A	
K45	Robot connection cable Group 6 Non-flex (A-cabinet)	7	A05B-2616-H100	A660-4005-T171#L7R503A	RP1 cable
				A660-4005-T174#L7R503A	RM1 cable
				A660-8011-T180#L7R503	Earth cable
		14	A05B-2616-H101	A660-4005-T171#L14R53A	RP1 cable
				A660-4005-T174#L14R53A	RM1 cable
				A660-8011-T180#L14R53	Earth cable
		20	A05B-2616-H102	A660-4005-T171#L20R53A	RP1 cable
				A660-4005-T174#L20R53A	RM1 cable
				A660-8011-T180#L20R53	Earth cable
		30	A05B-2616-H103	A660-4005-T172#L30R53A	RP1 cable
				A660-4005-T174#L30R53A	RM1 cable
				A660-8011-T180#L30R53	Earth cable
	Robot connection cable Group 6 Non-flex, CE (A-cabinet)	7	A05B-2616-H200	A660-4005-T171#L7R503A	RP1 cable
				A660-4005-T175#L7R503A	RM1 cable
				A660-8011-T180#L7R503	Earth cable
		14	A05B-2616-H201	A660-4005-T171#L14R53A	RP1 cable
				A660-4005-T175#L14R53A	RM1 cable
				A660-8011-T180#L14R53	Earth cable
		20	A05B-2616-H202	A660-4005-T171#L20R53A	RP1 cable
				A660-4005-T175#L20R53A	RM1 cable
				A660-8011-T180#L20R53	Earth cable
		30	A05B-2616-H203	A660-4005-T172#L30R53A	RP1 cable
				A660-4005-T175#L30R53A	RM1 cable
				A660-8011-T180#L30R53	Earth cable

Cable No.	Name	Length (m)	Ordering Specification	FANUC Specification	Note
K45	Robot connection cable Group 6 Non-flex (B-cabinet)	7	A05B-2616-H120	A660-4005-T171#L7R503B	RP1 cable
				A660-4005-T174#L7R503B	RM1 cable
				A660-8011-T180#L7R503	Earth cable
		14	A05B-2616-H121	A660-4005-T171#L14R53B	RP1 cable
				A660-4005-T174#L14R53B	RM1 cable
				A660-8011-T180#L14R53	Earth cable
		20	A05B-2616-H122	A660-4005-T171#L20R53B	RP1 cable
				A660-4005-T174#L20R53B	RM1 cable
				A660-8011-T180#L20R53	Earth cable
		30	A05B-2616-H123	A660-4005-T172#L30R53B	RP1 cable
				A660-4005-T174#L30R53B	RM1 cable
				A660-8011-T180#L30R53	Earth cable
	Robot connection cable Group 6 Non-flex, CE (B-cabinet)	7	A05B-2616-H220	A660-4005-T171#L7R503B	RP1 cable
				A660-4005-T175#L7R503B	RM1 cable
				A660-8011-T180#L7R503	Earth cable
		14	A05B-2616-H221	A660-4005-T171#L14R53B	RP1 cable
				A660-4005-T175#L14R53B	RM1 cable
				A660-8011-T180#L14R53	Earth cable
		20	A05B-2616-H222	A660-4005-T171#L20R53B	RP1 cable
				A660-4005-T175#L20R53B	RM1 cable
				A660-8011-T180#L20R53	Earth cable
		30	A05B-2616-H223	A660-4005-T172#L30R53B	RP1 cable
				A660-4005-T175#L30R53B	RM1 cable
				A660-8011-T180#L30R53	Earth cable
K52	M-430iA/2PH Robot connection cable for J6 (A-cabinet)	7	A05B-2616-J100	A660-2007-T373#L7R503A	RP6 cable
				A660-4005-T186#L7R503A	RM6 cable
		14	A05B-2616-J101	A660-2007-T373#L14R53A	RP6 cable
				A660-4005-T186#L14R53A	RM6 cable
		20	A05B-2616-J102	A660-2007-T373#L20R53A	RP6 cable
				A660-4005-T186#L20R53A	RM6 cable
		30	A05B-2616-J103	A660-2007-T373#L30R53A	RP6 cable
				A660-4005-T186#L30R53A	RM6 cable
	M-430iA/2PH Robot connection cable for J6 (A-cabinet) CE	7	A05B-2616-J200	A660-2007-T373#L7R503A	RP6 cable
				A660-4005-T187#L7R503A	RM6 cable
		14	A05B-2616-J201	A660-2007-T373#L14R53A	RP6 cable
				A660-4005-T187#L14R53A	RM6 cable
		20	A05B-2616-J202	A660-2007-T373#L20R53A	RP6 cable
				A660-4005-T187#L20R53A	RM6 cable
		30	A05B-2616-J203	A660-2007-T373#L30R53A	RP6 cable
				A660-4005-T187#L30R53A	RM6 cable
	M-430iA/2PH Robot connection cable for J6 (B-cabinet)	7	A05B-2616-J120	A660-2007-T373#L7R503B	RP6 cable
				A660-4005-T186#L7R503B	RM6 cable
		14	A05B-2616-J121	A660-2007-T373#L14R53B	RP6 cable
				A660-4005-T186#L14R53B	RM6 cable
		20	A05B-2616-J122	A660-2007-T373#L20R53B	RP6 cable
				A660-4005-T186#L20R53B	RM6 cable
		30	A05B-2616-J123	A660-2007-T373#L30R53B	RP6 cable
				A660-4005-T186#L30R53B	RM6 cable

Cable No.	Name	Length (m)	Ordering Specification	FANUC Specification	Note
K52	M-430iA/2PH Robot connection cable for J6 (B-cabinet) CE	7	A05B-2616-J220	A660-2007-T373#L7R503B	RP6 cable
				A660-4005-T187#L7R503B	RM6 cable
		14	A05B-2616-J221	A660-2007-T373#L14R53B	RP6 cable
				A660-4005-T187#L14R53B	RM6 cable
		20	A05B-2616-J222	A660-2007-T373#L20R53B	RP6 cable
				A660-4005-T187#L20R53B	RM6 cable
		30	A05B-2616-J223	A660-2007-T373#L30R53B	RP6 cable
				A660-4005-T187#L30R53B	RM6 cable
K46	Robot connection cable Group 7 Non-flex (A-cabinet)	7	A05B-2616-H140	A660-4005-T163#L7R503A	RMP cable
				A660-8011-T180#L7R503	Earth cable
		14	A05B-2616-H141	A660-4005-T163#L14R53A	RMP cable
				A660-8011-T180#L14R53	Earth cable
		20	A05B-2616-H142	A660-4005-T163#L20R53A	RMP cable
				A660-8011-T180#L20R53	Earth cable
		30	A05B-2616-H143	A660-4005-T164#L30R53A	RMP cable
				A660-8011-T180#L30R53	Earth cable
	Robot connection cable Group 7 Non-flex, CE (A-cabinet)	7	A05B-2616-H240	A660-4005-T165#L7R503A	RMP cable
				A660-8011-T180#L7R503	Earth cable
		14	A05B-2616-H241	A660-4005-T165#L14R53A	RMP cable
				A660-8011-T180#L14R53	Earth cable
		20	A05B-2616-H242	A660-4005-T165#L20R53A	RMP cable
				A660-8011-T180#L20R53	Earth cable
		30	A05B-2616-H243	A660-4005-T166#L30R53A	RMP cable
				A660-8011-T180#L30R53	Earth cable
	Robot connection cable Group 7 Non-flex (B-cabinet)	7	A05B-2616-H160	A660-4005-T163#L7R503B	RMP cable
				A660-8011-T180#L7R503	Earth cable
		14	A05B-2616-H161	A660-4005-T163#L14R53B	RMP cable
				A660-8011-T180#L14R53	Earth cable
		20	A05B-2616-H162	A660-4005-T163#L20R53B	RMP cable
				A660-8011-T180#L20R53	Earth cable
		30	A05B-2616-H163	A660-4005-T164#L30R53B	RMP cable
				A660-8011-T180#L30R53	Earth cable
	Robot connection cable Group 7 Non-flex, CE (B-cabinet)	7	A05B-2616-H260	A660-4005-T165#L7R503B	RMP cable
				A660-8011-T180#L7R503	Earth cable
		14	A05B-2616-H261	A660-4005-T165#L14R53B	RMP cable
				A660-8011-T180#L14R53	Earth cable
		20	A05B-2616-H262	A660-4005-T165#L20R53B	RMP cable
				A660-8011-T180#L20R53	Earth cable
		30	A05B-2616-H263	A660-4005-T166#L30R53B	RMP cable
				A660-8011-T180#L30R53	Earth cable
K47	Robot connection cable Group 8 Non-flex (A-cabinet)	7	A05B-2611-H100	A660-4005-T081#L7R503A	RMP cable
				A660-8011-T182#L7R503	Earth cable
		14	A05B-2611-H101	A660-4005-T081#L14R53A	RMP cable
				A660-8011-T182#L14R53	Earth cable
		20	A05B-2611-H102	A660-4005-T081#L20R53A	RMP cable
				A660-8011-T182#L20R53	Earth cable
		30	A05B-2611-H103	A660-4005-T116#L30R53A	RMP cable
				A660-8011-T182#L30R53	Earth cable

Cable No.	Name	Length (m)	Ordering Specification	FANUC Specification	Note
K47	Robot connection cable Group 8 Flex (A-cabinet)	7	A05B-2611-H110	A660-4005-T119#L7R503A	RMP cable
				A660-8011-T182#L7R503	Earth cable
		14	A05B-2611-H111	A660-4005-T119#L14R53A	RMP cable
				A660-8011-T182#L14R53	Earth cable
		20	A05B-2611-H112	A660-4005-T119#L20R53A	RMP cable
				A660-8011-T182#L20R53	Earth cable
		30	A05B-2611-H113	A660-4005-T119#L30R53A	RMP cable
				A660-8011-T182#L30R53	Earth cable
	Robot connection cable Group 8 Non-flex, CE (A-cabinet)	7	A05B-2611-H200	A660-4005-T117#L7R503A	RMP cable
				A660-8011-T182#L7R503	Earth cable
		14	A05B-2611-H201	A660-4005-T117#L14R53A	RMP cable
				A660-8011-T182#L14R53	Earth cable
		20	A05B-2611-H202	A660-4005-T117#L20R53A	RMP cable
				A660-8011-T182#L20R53	Earth cable
		30	A05B-2611-H203	A660-4005-T118#L30R53A	RMP cable
				A660-8011-T182#L30R53	Earth cable
	Robot connection cable Group 8 Flex, CE (A-cabinet)	7	A05B-2611-H210	A660-4005-T120#L7R503A	RMP cable
				A660-8011-T182#L7R503	Earth cable
		14	A05B-2611-H211	A660-4005-T120#L14R53A	RMP cable
				A660-8011-T182#L14R53	Earth cable
		20	A05B-2611-H212	A660-4005-T120#L20R53A	RMP cable
				A660-8011-T182#L20R53	Earth cable
		30	A05B-2611-H213	A660-4005-T120#L30R53A	RMP cable
				A660-8011-T182#L30R53	Earth cable
	Robot connection cable Group 8 Non-flex (B-cabinet)	7	A05B-2611-H120	A660-4005-T081#L7R503B	RMP cable
				A660-8011-T182#L7R503	Earth cable
		14	A05B-2611-H121	A660-4005-T081#L14R53B	RMP cable
				A660-8011-T182#L14R53	Earth cable
		20	A05B-2611-H122	A660-4005-T081#L20R53B	RMP cable
				A660-8011-T182#L20R53	Earth cable
		30	A05B-2611-H123	A660-4005-T116#L30R53B	RMP cable
				A660-8011-T182#L30R53	Earth cable
	Robot connection cable Group 8 Flex (B-cabinet)	7	A05B-2611-H130	A660-4005-T119#L7R503B	RMP cable
				A660-8011-T182#L7R503	Earth cable
		14	A05B-2611-H131	A660-4005-T119#L14R53B	RMP cable
				A660-8011-T182#L14R53	Earth cable
		20	A05B-2611-H132	A660-4005-T119#L20R53B	RMP cable
				A660-8011-T182#L20R53	Earth cable
		30	A05B-2611-H133	A660-4005-T119#L30R53B	RMP cable
				A660-8011-T182#L30R53	Earth cable
	Robot connection cable Group 8 Non-flex, CE (B-cabinet)	7	A05B-2611-H220	A660-4005-T117#L7R503B	RMP cable
				A660-8011-T182#L7R503	Earth cable
		14	A05B-2611-H221	A660-4005-T117#L14R53B	RMP cable
				A660-8011-T182#L14R53	Earth cable
		20	A05B-2611-H222	A660-4005-T117#L20R53B	RMP cable
				A660-8011-T182#L20R53	Earth cable
		30	A05B-2611-H223	A660-4005-T118#L30R53B	RMP cable
				A660-8011-T182#L30R53	Earth cable

Cable No.	Name	Length (m)	Ordering Specification	FANUC Specification	Note
K47	Robot connection cable Group 8 Flex, CE (B-cabinet)	7	A05B-2611-H230	A660-4005-T120#L7R503B	RMP cable
				A660-8011-T182#L7R503	Earth cable
		14	A05B-2611-H231	A660-4005-T120#L14R53B	RMP cable
				A660-8011-T182#L14R53	Earth cable
		20	A05B-2611-H232	A660-4005-T120#L20R53B	RMP cable
				A660-8011-T182#L20R53	Earth cable
		30	A05B-2611-H233	A660-4005-T120#L30R53B	RMP cable
				A660-8011-T182#L30R53	Earth cable
K48	Robot connection cable Group 9 Non-flex (Controller 2) (B-cabinet)	7	A05B-2618-H120	A660-2007-T299#L7R503B	RP1 cable
				A660-4005-T314#L7R503MB	RM1 cable
				A660-4005-T315#L7R503MB	RM2 cable
				A660-8011-T182#L7R503	Earth cable
		14	A05B-2618-H121	A660-2007-T299#L14R53B	RP1 cable
				A660-4005-T314#L14R53MB	RM1 cable
				A660-4005-T315#L14R53MB	RM2 cable
				A660-8011-T182#L14R53	Earth cable
		20	A05B-2618-H122	A660-2007-T299#L20R53B	RP1 cable
				A660-4005-T314#L20R53MB	RM1 cable
				A660-4005-T315#L20R53MB	RM2 cable
				A660-8011-T182#L20R53	Earth cable
		30	A05B-2618-H123	A660-2007-T334#L30R53B	RP1 cable
				A660-4005-T314#L30R53MB	RM1 cable
				A660-4005-T315#L30R53MB	RM2 cable
				A660-8011-T182#L30R53	Earth cable
	Robot connection cable Group 9 Non-flex (Controller 1) (B-cabinet)	7	A05B-2618-H125	A660-2007-T521#L7R503B	RP2 cable
				A660-4005-T314#L7R503SB	RM3 cable
				A660-4005-T315#L7R503SB	RM4 cable
		14	A05B-2618-H126	A660-2007-T521#L14R53B	RP2 cable
				A660-4005-T314#L14R53SB	RM3 cable
				A660-4005-T315#L14R53SB	RM4 cable
		20	A05B-2618-H127	A660-2007-T521#L20R53B	RP2 cable
				A660-4005-T314#L20R53SB	RM3 cable
				A660-4005-T315#L20R53SB	RM4 cable
		30	A05B-2618-H128	A660-2007-T522#L30R53B	RP2 cable
				A660-4005-T314#L30R53SB	RM3 cable
				A660-4005-T315#L30R53SB	RM4 cable
	Robot connection cable Group 9 Non-flex, CE (Controller 2) (B-cabinet)	7	A05B-2618-H220	A660-2007-T299#L7R503B	RP1 cable
				A660-4005-T316#L7R503MB	RM1 cable
				A660-4005-T317#L7R503MB	RM2 cable
				A660-8011-T182#L7R503	Earth cable
		14	A05B-2618-H221	A660-2007-T299#L14R53B	RP1 cable
				A660-4005-T316#L14R53MB	RM1 cable
				A660-4005-T317#L14R53MB	RM2 cable
				A660-8011-T182#L14R53	Earth cable
		20	A05B-2618-H222	A660-2007-T299#L20R53B	RP1 cable
				A660-4005-T316#L20R53MB	RM1 cable
				A660-4005-T317#L20R53MB	RM2 cable
				A660-8011-T182#L20R53	Earth cable
		30	A05B-2618-H223	A660-2007-T334#L30R53B	RP1 cable
				A660-4005-T316#L30R53MB	RM1 cable
				A660-4005-T317#L30R53MB	RM2 cable
				A660-8011-T182#L30R53	Earth cable

Cable No.	Name	Length (m)	Ordering Specification	FANUC Specification	Note
K48	Robot connection cable Group 9 Non-flex, CE (Controller 1) (B-cabinet)	7	A05B-2618-H225	A660-2007-T521#L7R503B	RP2 cable
				A660-4005-T316#L7R503SB	RM3 cable
				A660-4005-T317#L7R503SB	RM4 cable
		14	A05B-2618-H226	A660-2007-T521#L14R53B	RP2 cable
				A660-4005-T316#L14R53SB	RM3 cable
				A660-4005-T317#L14R53SB	RM4 cable
		20	A05B-2618-H227	A660-2007-T521#L20R53B	RP2 cable
				A660-4005-T316#L20R53SB	RM3 cable
				A660-4005-T317#L20R53SB	RM4 cable
		30	A05B-2618-H228	A660-2007-T522#L30R53B	RP2 cable
				A660-4005-T316#L30R53SB	RM3 cable
				A660-4005-T317#L30R53SB	RM4 cable
K49	Robot connection cable Group 10 Non-flex (Controller 1) (A-cabinet)	7	A05B-2617-H100	A660-4005-T237#L8R003A	RP1 cable
				A660-4005-T239#L8R003MA	RM1 cable
				A660-4005-T240#L8R003MA	RM2 cable
		14	A05B-2617-H101	A660-4005-T237#L15R03A	RP1 cable
				A660-4005-T239#L15R03MA	RM1 cable
				A660-4005-T240#L15R03MA	RM2 cable
		20	A05B-2617-H102	A660-4005-T237#L21R03A	RP1 cable
				A660-4005-T239#L21R03MA	RM1 cable
				A660-4005-T240#L21R03MA	RM2 cable
		30	A05B-2617-H103	A660-4005-T260#L31R03A	RP1 cable
				A660-4005-T239#L31R03MA	RM1 cable
				A660-4005-T240#L31R03MA	RM2 cable
	Robot connection cable Group 10 Non-flex (Controller 2) (A-cabinet)	7	A05B-2617-H105	A660-4005-T238#L7R503A	RP2 cable
				A660-4005-T239#L7R503SA	RM3 cable
				A660-4005-T240#L7R503SA	RM4 cable
				A660-8011-T182#L7R503	Earth cable
		14	A05B-2617-H106	A660-4005-T238#L14R53A	RP2 cable
				A660-4005-T239#L14R53SA	RM3 cable
				A660-4005-T240#L14R53SA	RM4 cable
				A660-8011-T182#L14R53	Earth cable
		20	A05B-2617-H107	A660-4005-T238#L20R53A	RP2 cable
				A660-4005-T239#L20R53SA	RM3 cable
				A660-4005-T240#L20R53SA	RM4 cable
				A660-8011-T182#L20R53	Earth cable
		30	A05B-2617-H108	A660-4005-T261#L30R53A	RP2 cable
				A660-4005-T239#L30R53SA	RM3 cable
				A660-4005-T240#L30R53SA	RM4 cable
				A660-8011-T182#L30R53	Earth cable
	Robot connection cable Group 10 Flex (Controller 1) (A-cabinet)	7	A05B-2617-H110	A660-4005-T262#L8R003A	RP1 cable
				A660-4005-T264#L8R003MA	RM1 cable
				A660-4005-T265#L8R003MA	RM2 cable
		14	A05B-2617-H111	A660-4005-T262#L15R03A	RP1 cable
				A660-4005-T264#L15R03MA	RM1 cable
				A660-4005-T265#L15R03MA	RM2 cable
		20	A05B-2617-H112	A660-4005-T262#L21R03A	RP1 cable
				A660-4005-T264#L21R03MA	RM1 cable
				A660-4005-T265#L21R03MA	RM2 cable
		30	A05B-2617-H113	A660-4005-T262#L31R03A	RP1 cable
				A660-4005-T264#L31R03MA	RM1 cable
				A660-4005-T265#L31R03MA	RM2 cable

Cable No.	Name	Length (m)	Ordering Specification	FANUC Specification	Note
K49	Robot connection cable Group 10 Flex (Controller 2) (A-cabinet)	7	A05B-2617-H115	A660-4005-T263#L7R503A	RP2 cable
				A660-4005-T264#L7R503SA	RM3 cable
				A660-4005-T265#L7R503SA	RM4 cable
				A660-8011-T182#L7R503	Earth cable
		14	A05B-2617-H116	A660-4005-T263#L14R53A	RP2 cable
				A660-4005-T264#L14R53SA	RM3 cable
				A660-4005-T265#L14R53SA	RM4 cable
				A660-8011-T182#L14R53	Earth cable
		20	A05B-2617-H117	A660-4005-T263#L20R53A	RP2 cable
				A660-4005-T264#L20R53SA	RM3 cable
				A660-4005-T265#L20R53SA	RM4 cable
				A660-8011-T182#L20R53	Earth cable
		30	A05B-2617-H118	A660-4005-T263#L30R53A	RP2 cable
				A660-4005-T264#L30R53SA	RM3 cable
				A660-4005-T265#L30R53SA	RM4 cable
				A660-8011-T182#L30R53	Earth cable
	Robot connection cable Group 10 Non-flex, CE (Controller 1) (A-cabinet)	7	A05B-2617-H200	A660-4005-T237#L8R003A	RP1 cable
				A660-4005-T266#L8R003MA	RM1 cable
				A660-4005-T267#L8R003MA	RM2 cable
		14	A05B-2617-H201	A660-4005-T237#L15R03A	RP1 cable
				A660-4005-T266#L15R03MA	RM1 cable
				A660-4005-T267#L15R03MA	RM2 cable
		20	A05B-2617-H202	A660-4005-T237#L21R03A	RP1 cable
				A660-4005-T266#L21R03MA	RM1 cable
				A660-4005-T267#L21R03MA	RM2 cable
		30	A05B-2617-H203	A660-4005-T260#L31R03A	RP1 cable
				A660-4005-T266#L31R03MA	RM1 cable
				A660-4005-T267#L31R03MA	RM2 cable
	Robot connection cable Group 10 Flex, CE (Controller 2) (A-cabinet)	7	A05B-2617-H205	A660-4005-T238#L7R503A	RP2 cable
				A660-4005-T266#L7R503SA	RM3 cable
				A660-4005-T267#L7R503SA	RM4 cable
				A660-8011-T182#L7R503	Earth cable
		14	A05B-2617-H206	A660-4005-T238#L14R53A	RP2 cable
				A660-4005-T266#L14R53SA	RM3 cable
				A660-4005-T267#L14R53SA	RM4 cable
				A660-8011-T182#L14R53	Earth cable
		20	A05B-2617-H207	A660-4005-T238#L20R53A	RP2 cable
				A660-4005-T266#L20R53SA	RM3 cable
				A660-4005-T267#L20R53SA	RM4 cable
				A660-8011-T182#L20R53	Earth cable
		30	A05B-2617-H208	A660-4005-T261#L30R53A	RP2 cable
				A660-4005-T266#L30R53SA	RM3 cable
				A660-4005-T267#L30R53SA	RM4 cable
				A660-8011-T182#L30R53	Earth cable

Cable No.	Name	Length (m)	Ordering Specification	FANUC Specification	Note
K49	Robot connection cable Group 10 Flex, CE (Controller 1) (A-cabinet)	7	A05B-2617-H210	A660-4005-T262#L8R003A	RP1 cable
				A660-4005-T268#L8R003MA	RM1 cable
				A660-4005-T269#L8R003MA	RM2 cable
		14	A05B-2617-H211	A660-4005-T262#L15R03A	RP1 cable
				A660-4005-T268#L15R03MA	RM1 cable
				A660-4005-T269#L15R03MA	RM2 cable
		20	A05B-2617-H212	A660-4005-T262#L21R03A	RP1 cable
				A660-4005-T268#L21R03MA	RM1 cable
				A660-4005-T269#L21R03MA	RM2 cable
		30	A05B-2617-H213	A660-4005-T262#L31R03A	RP1 cable
				A660-4005-T268#L31R03MA	RM1 cable
				A660-4005-T269#L31R03MA	RM2 cable
	Robot connection cable Group 10 Flex, CE (Controller 2) (A-cabinet)	7	A05B-2617-H215	A660-4005-T263#L7R503A	RP2 cable
				A660-4005-T268#L7R503SA	RM3 cable
				A660-4005-T269#L7R503SA	RM4 cable
				A660-8011-T182#L7R503	Earth cable
		14	A05B-2617-H216	A660-4005-T263#L14R53A	RP2 cable
				A660-4005-T268#L14R53SA	RM3 cable
				A660-4005-T269#L14R53SA	RM4 cable
				A660-8011-T182#L14R53	Earth cable
		20	A05B-2617-H217	A660-4005-T263#L20R53A	RP2 cable
				A660-4005-T268#L20R53SA	RM3 cable
				A660-4005-T269#L20R53SA	RM4 cable
				A660-8011-T182#L20R53	Earth cable
		30	A05B-2617-H218	A660-4005-T263#L30R53A	RP2 cable
				A660-4005-T268#L30R53SA	RM3 cable
				A660-4005-T269#L30R53SA	RM4 cable
				A660-8011-T182#L30R53	Earth cable
	Robot connection cable Group 10 Non-flex (Controller 1) (B-cabinet)	7	A05B-2617-H120	A660-4005-T237#L7R503B	RP1 cable
				A660-4005-T239#L7R503MB	RM1 cable
				A660-4005-T240#L7R503MB	RM2 cable
				A660-8011-T182#L7R503	Earth cable
		14	A05B-2617-H121	A660-4005-T237#L14R53B	RP1 cable
				A660-4005-T239#L14R53MB	RM1 cable
				A660-4005-T240#L14R53MB	RM2 cable
				A660-8011-T182#L14R53	Earth cable
		20	A05B-2617-H122	A660-4005-T237#L20R53B	RP1 cable
				A660-4005-T239#L20R53MB	RM1 cable
				A660-4005-T240#L20R53MB	RM2 cable
				A660-8011-T182#L20R53	Earth cable
		30	A05B-2617-H123	A660-4005-T260#L30R53B	RP1 cable
				A660-4005-T239#L30R53MB	RM1 cable
				A660-4005-T240#L30R53MB	RM2 cable
				A660-8011-T182#L30R53	Earth cable

Cable No.	Name	Length (m)	Ordering Specification	FANUC Specification	Note
K49	Robot connection cable Group 10 Non-flex (Controller 2) (B-cabinet)	7	A05B-2617-H125	A660-4005-T238#L7R503B	RP2 cable
				A660-4005-T239#L7R503SB	RM3 cable
				A660-4005-T240#L7R503SB	RM4 cable
		14	A05B-2617-H126	A660-4005-T238#L14R53B	RP2 cable
				A660-4005-T239#L14R53SB	RM3 cable
				A660-4005-T240#L14R53SB	RM4 cable
		20	A05B-2617-H127	A660-4005-T238#L20R53B	RP2 cable
				A660-4005-T239#L20R53SB	RM3 cable
				A660-4005-T240#L20R53SB	RM4 cable
		30	A05B-2617-H128	A660-4005-T261#L30R53B	RP2 cable
				A660-4005-T239#L30R53SB	RM3 cable
				A660-4005-T240#L30R53SB	RM4 cable
	Robot connection cable Group 10 Flex (Controller 1) (B-cabinet)	7	A05B-2617-H130	A660-4005-T262#L7R503B	RP1 cable
				A660-4005-T264#L7R503MB	RM1 cable
				A660-4005-T265#L7R503MB	RM2 cable
				A660-8011-T182#L7R503	Earth cable
		14	A05B-2617-H131	A660-4005-T262#L14R53B	RP1 cable
				A660-4005-T264#L14R53MB	RM1 cable
				A660-4005-T265#L14R53MB	RM2 cable
				A660-8011-T182#L14R53	Earth cable
		20	A05B-2617-H132	A660-4005-T262#L20R53B	RP1 cable
				A660-4005-T264#L20R53MB	RM1 cable
				A660-4005-T265#L20R53MB	RM2 cable
				A660-8011-T182#L20R53	Earth cable
		30	A05B-2617-H133	A660-4005-T262#L30R53B	RP1 cable
				A660-4005-T264#L30R53MB	RM1 cable
				A660-4005-T265#L30R53MB	RM2 cable
				A660-8011-T182#L30R53	Earth cable
	Robot connection cable Group 10 Flex (Controller 2) (B-cabinet)	7	A05B-2617-H135	A660-4005-T263#L7R503B	RP2 cable
				A660-4005-T264#L7R503SB	RM3 cable
				A660-4005-T265#L7R503SB	RM4 cable
		14	A05B-2617-H136	A660-4005-T263#L14R53B	RP2 cable
				A660-4005-T264#L14R53SB	RM3 cable
				A660-4005-T265#L14R53SB	RM4 cable
		20	A05B-2617-H137	A660-4005-T263#L20R53B	RP2 cable
				A660-4005-T264#L20R53SB	RM3 cable
				A660-4005-T265#L20R53SB	RM4 cable
		30	A05B-2617-H138	A660-4005-T263#L30R53B	RP2 cable
				A660-4005-T264#L30R53SB	RM3 cable
				A660-4005-T265#L30R53SB	RM4 cable

Cable No.	Name	Length (m)	Ordering Specification	FANUC Specification	Note
K49	Robot connection cable Group 10 Non-flex, CE (Controller 1) (B-cabinet)	7	A05B-2617-H220	A660-4005-T237#L7R503B	RP1 cable
				A660-4005-T266#L7R503MB	RM1 cable
				A660-4005-T267#L7R503MB	RM2 cable
				A660-8011-T182#L7R503	Earth cable
		14	A05B-2617-H221	A660-4005-T237#L14R53B	RP1 cable
				A660-4005-T266#L14R53MB	RM1 cable
				A660-4005-T267#L14R53MB	RM2 cable
				A660-8011-T182#L14R53	Earth cable
		20	A05B-2617-H222	A660-4005-T237#L20R53B	RP1 cable
				A660-4005-T266#L20R53MB	RM1 cable
				A660-4005-T267#L20R53MB	RM2 cable
				A660-8011-T182#L20R53	Earth cable
		30	A05B-2617-H223	A660-4005-T260#L30R53B	RP1 cable
				A660-4005-T266#L30R53MB	RM1 cable
				A660-4005-T267#L30R53MB	RM2 cable
				A660-8011-T182#L30R53	Earth cable
	Robot connection cable Group 10 Non-flex, CE (Controller 2) (B-cabinet)	7	A05B-2617-H225	A660-4005-T238#L7R503B	RP2 cable
				A660-4005-T266#L7R503SB	RM3 cable
				A660-4005-T267#L7R503SB	RM4 cable
		14	A05B-2617-H226	A660-4005-T238#L14R53B	RP2 cable
				A660-4005-T266#L14R53SB	RM3 cable
				A660-4005-T267#L14R53SB	RM4 cable
		20	A05B-2617-H227	A660-4005-T238#L20R53B	RP2 cable
				A660-4005-T266#L20R53SB	RM3 cable
				A660-4005-T267#L20R53SB	RM4 cable
		30	A05B-2617-H228	A660-4005-T261#L30R53B	RP2 cable
				A660-4005-T266#L30R53SB	RM3 cable
				A660-4005-T267#L30R53SB	RM4 cable
	Robot connection cable Group 10 Flex, CE (Controller 1) (B-cabinet)	7	A05B-2617-H230	A660-4005-T262#L7R503B	RP1 cable
				A660-4005-T268#L7R503MB	RM1 cable
				A660-4005-T269#L7R503MB	RM2 cable
				A660-8011-T182#L7R503	Earth cable
		14	A05B-2617-H231	A660-4005-T262#L14R53B	RP1 cable
				A660-4005-T268#L14R53MB	RM1 cable
				A660-4005-T269#L14R53MB	RM2 cable
				A660-8011-T182#L14R53	Earth cable
		20	A05B-2617-H232	A660-4005-T262#L20R53B	RP1 cable
				A660-4005-T268#L20R53MB	RM1 cable
				A660-4005-T269#L20R53MB	RM2 cable
				A660-8011-T182#L20R53	Earth cable
		30	A05B-2617-H233	A660-4005-T262#L30R53B	RP1 cable
				A660-4005-T268#L30R53MB	RM1 cable
				A660-4005-T269#L30R53MB	RM2 cable
				A660-8011-T182#L30R53	Earth cable

Cable No.	Name	Length (m)	Ordering Specification	FANUC Specification	Note
K49	Robot connection cable Group 10 Flex, CE (Controller 2) (B-cabinet)	7	A05B-2617-H235	A660-4005-T263#L7R503B	RP2 cable
				A660-4005-T268#L7R503SB	RM3 cable
				A660-4005-T269#L7R503SB	RM4 cable
		14	A05B-2617-H236	A660-4005-T263#L14R53B	RP2 cable
				A660-4005-T268#L14R53SB	RM3 cable
				A660-4005-T269#L14R53SB	RM4 cable
		20	A05B-2617-H237	A660-4005-T263#L20R53B	RP2 cable
				A660-4005-T268#L20R53SB	RM3 cable
				A660-4005-T269#L20R53SB	RM4 cable
		30	A05B-2617-H238	A660-4005-T263#L30R53B	RP2 cable
				A660-4005-T268#L30R53SB	RM3 cable
				A660-4005-T269#L30R53SB	RM4 cable
K50	Robot connection cable Group 11 Non-flex (A-cabinet)	7	A05B-2615-H100	A660-2007-T300#L7R503A	RP1 cable
				A660-4005-T082#L7R503A	RM1 cable
				A660-8011-T182#L7R503	Earth cable
		14	A05B-2615-H101	A660-2007-T300#L14R53A	RP1 cable
				A660-4005-T082#L14R53A	RM1 cable
				A660-8011-T182#L14R53	Earth cable
		20	A05B-2615-H102	A660-2007-T300#L20R53A	RP1 cable
				A660-4005-T082#L20R53A	RM1 cable
				A660-8011-T182#L20R53	Earth cable
		30	A05B-2615-H103	A660-2007-T316#L30R53A	RP1 cable
				A660-4005-T082#L30R53A	RM1 cable
				A660-8011-T182#L30R53	Earth cable
	Robot connection cable Group 11 Non-flex, CE (A-cabinet)	7	A05B-2615-H200	A660-2007-T300#L7R503A	RP1 cable
				A660-4005-T144#L7R503A	RM1 cable
				A660-8011-T182#L7R503	Earth cable
		14	A05B-2615-H201	A660-2007-T300#L14R53A	RP1 cable
				A660-4005-T144#L14R53A	RM1 cable
				A660-8011-T182#L14R53	Earth cable
		20	A05B-2615-H202	A660-2007-T300#L20R53A	RP1 cable
				A660-4005-T144#L20R53A	RM1 cable
				A660-8011-T182#L20R53	Earth cable
		30	A05B-2615-H203	A660-2007-T316#L30R53A	RP1 cable
				A660-4005-T144#L30R53A	RM1 cable
				A660-8011-T182#L30R53	Earth cable
K51	Robot connection cable Group 12 Non-flex (A-cabinet)	7	A05B-2610-H100	A660-2007-T299#L7R503A	RP1 cable
				A660-4005-T080#L7R503A	RM1 cable
				A660-8011-T182#L7R503	Earth cable
		14	A05B-2610-H101	A660-2007-T299#L14R53A	RP1 cable
				A660-4005-T080#L14R53A	RM1 cable
				A660-8011-T182#L14R53	Earth cable
		20	A05B-2610-H102	A660-2007-T299#L20R53A	RP1 cable
				A660-4005-T080#L20R53A	RM1 cable
				A660-8011-T182#L20R53	Earth cable
		30	A05B-2610-H103	A660-2007-T334#L30R53A	RP1 cable
				A660-4005-T080#L30R53A	RM1 cable
				A660-8011-T182#L30R53	Earth cable

Cable No.	Name	Length (m)	Ordering Specification	FANUC Specification	Note
K51	Robot connection cable Group 12 Flex (A-cabinet)	7	A05B-2610-H110	A660-2007-T335#L7R503A	RP1 cable
				A660-4005-T114#L7R503A	RM1 cable
				A660-8011-T182#L7R503	Earth cable
		14	A05B-2610-H111	A660-2007-T335#L14R53A	RP1 cable
				A660-4005-T114#L14R53A	RM1 cable
				A660-8011-T182#L14R53	Earth cable
		20	A05B-2610-H112	A660-2007-T335#L20R53A	RP1 cable
				A660-4005-T114#L20R53A	RM1 cable
				A660-8011-T182#L20R53	Earth cable
		30	A05B-2610-H113	A660-2007-T335#L30R53A	RP1 cable
				A660-4005-T114#L30R53A	RM1 cable
				A660-8011-T182#L30R53	Earth cable
	Robot connection cable Group 12 Non-flex, CE (A-cabinet)	7	A05B-2610-H200	A660-2007-T299#L7R503A	RP1 cable
				A660-4005-T113#L7R503A	RM1 cable
				A660-8011-T182#L7R503	Earth cable
		14	A05B-2610-H201	A660-2007-T299#L14R53A	RP1 cable
				A660-4005-T113#L14R53A	RM1 cable
				A660-8011-T182#L14R53	Earth cable
		20	A05B-2610-H202	A660-2007-T299#L20R53A	RP1 cable
				A660-4005-T113#L20R53A	RM1 cable
				A660-8011-T182#L20R53	Earth cable
		30	A05B-2610-H203	A660-2007-T334#L30R53A	RP1 cable
				A660-4005-T113#L30R53A	RM1 cable
				A660-8011-T182#L30R53	Earth cable
	Robot connection cable Group 12 Flex, CE (A-cabinet)	7	A05B-2610-H210	A660-2007-T335#L7R503A	RP1 cable
				A660-4005-T115#L7R503A	RM1 cable
				A660-8011-T182#L7R503	Earth cable
		14	A05B-2610-H211	A660-2007-T335#L14R53A	RP1 cable
				A660-4005-T115#L14R53A	RM1 cable
				A660-8011-T182#L14R53	Earth cable
		20	A05B-2610-H212	A660-2007-T335#L20R53A	RP1 cable
				A660-4005-T115#L20R53A	RM1 cable
				A660-8011-T182#L20R53	Earth cable
		30	A05B-2610-H213	A660-2007-T335#L30R53A	RP1 cable
				A660-4005-T115#L30R53A	RM1 cable
				A660-8011-T182#L30R53	Earth cable
	Robot connection cable Group 12 Non-flex (B-cabinet)	7	A05B-2610-H120	A660-2007-T299#L7R503B	RP1 cable
				A660-4005-T080#L7R503B	RM1 cable
				A660-8011-T182#L7R503	Earth cable
		14	A05B-2610-H121	A660-2007-T299#L14R53B	RP1 cable
				A660-4005-T080#L14R53B	RM1 cable
				A660-8011-T182#L14R53	Earth cable
		20	A05B-2610-H122	A660-2007-T299#L20R53B	RP1 cable
				A660-4005-T080#L20R53B	RM1 cable
				A660-8011-T182#L20R53	Earth cable
		30	A05B-2610-H123	A660-2007-T334#L30R53B	RP1 cable
				A660-4005-T080#L30R53B	RM1 cable
				A660-8011-T182#L30R53	Earth cable

Cable No.	Name	Length (m)	Ordering Specification	FANUC Specification	Note
K51	Robot connection cable Group 12 Flex (B-cabinet)	7	A05B-2610-H130	A660-2007-T335#L7R503B	RP1 cable
				A660-4005-T114#L7R503B	RM1 cable
				A660-8011-T182#L7R503	Earth cable
		14	A05B-2610-H131	A660-2007-T335#L14R53B	RP1 cable
				A660-4005-T114#L14R53B	RM1 cable
				A660-8011-T182#L14R53	Earth cable
		20	A05B-2610-H132	A660-2007-T335#L20R53B	RP1 cable
				A660-4005-T114#L20R53B	RM1 cable
				A660-8011-T182#L20R53	Earth cable
		30	A05B-2610-H133	A660-2007-T335#L30R53B	RP1 cable
				A660-4005-T114#L30R53B	RM1 cable
				A660-8011-T182#L30R53	Earth cable
	Robot connection cable Group 12 Non-flex, CE (B-cabinet)	7	A05B-2610-H220	A660-2007-T299#L7R503B	RP1 cable
				A660-4005-T113#L7R503B	RM1 cable
				A660-8011-T182#L7R503	Earth cable
		14	A05B-2610-H221	A660-2007-T299#L14R53B	RP1 cable
				A660-4005-T113#L14R53B	RM1 cable
				A660-8011-T182#L14R53	Earth cable
		20	A05B-2610-H222	A660-2007-T299#L20R53B	RP1 cable
				A660-4005-T113#L20R53B	RM1 cable
				A660-8011-T182#L20R53	Earth cable
		30	A05B-2610-H223	A660-2007-T334#L30R53B	RP1 cable
				A660-4005-T113#L30R53B	RM1 cable
				A660-8011-T182#L30R53	Earth cable
	Robot connection cable Group 12 Flex, CE (B-cabinet)	7	A05B-2610-H230	A660-2007-T335#L7R503B	RP1 cable
				A660-4005-T115#L7R503B	RM1 cable
				A660-8011-T182#L7R503	Earth cable
		14	A05B-2610-H231	A660-2007-T335#L14R53B	RP1 cable
				A660-4005-T115#L14R53B	RM1 cable
				A660-8011-T182#L14R53	Earth cable
		20	A05B-2610-H232	A660-2007-T335#L20R53B	RP1 cable
				A660-4005-T115#L20R53B	RM1 cable
				A660-8011-T182#L20R53	Earth cable
		30	A05B-2610-H233	A660-2007-T335#L30R53B	RP1 cable
				A660-4005-T115#L30R53B	RM1 cable
				A660-8011-T182#L30R53	Earth cable
K53	R-1000iA/120F-7B Robot connection cable for J7 Non-flex (A-cabinet)	7	A05B-2623-J100	A660-2008-T092#L7R503A	RP7A cable
				A660-4005-T630#L7R503A	RM7A cable
		14	A05B-2623-J101	A660-2008-T092#L14R53A	RP7A cable
				A660-4005-T630#L14R53A	RM7A cable
		20	A05B-2623-J102	A660-2008-T092#L20R53A	RP7A cable
				A660-4005-T630#L20R53A	RM7A cable
		30	A05B-2623-J103	A660-2008-T092#L30R53A	RP7A cable
				A660-4005-T630#L30R53A	RM7A cable
	R-1000iA/120F-7B Robot connection cable for J7 Flex (A-cabinet)	7	A05B-2623-J110	A660-2008-T407#L7R503A	RP7A cable
				A660-4005-T764#L7R503A	RM7A cable
		14	A05B-2623-J111	A660-2008-T407#L14R53A	RP7A cable
				A660-4005-T764#L14R53A	RM7A cable
		20	A05B-2623-J112	A660-2008-T407#L20R53A	RP7A cable
				A660-4005-T764#L20R53A	RM7A cable
		30	A05B-2623-J113	A660-2008-T407#L30R53A	RP7A cable
				A660-4005-T764#L30R53A	RM7A cable

Cable No.	Name	Length (m)	Ordering Specification	FANUC Specification	Note
K53	R-1000iA/120F-7B Robot connection cable for J7 Non-flex, CE (A-cabinet)	7	A05B-2623-J200	A660-2008-T092#L7R503A	RP7A cable
				A660-4005-T639#L7R503A	RM7A cable
		14	A05B-2623-J201	A660-2008-T092#L14R53A	RP7A cable
				A660-4005-T639#L14R53A	RM7A cable
		20	A05B-2623-J202	A660-2008-T092#L20R53A	RP7A cable
				A660-4005-T639#L20R53A	RM7A cable
		30	A05B-2623-J203	A660-2008-T092#L30R53A	RP7A cable
				A660-4005-T639#L30R53A	RM7A cable
	R-1000iA/120F-7B Robot connection cable for J7 Flex, CE (A-cabinet)	7	A05B-2623-J210	A660-2008-T407#L7R503A	RP7A cable
				A660-4005-T765#L7R503A	RM7A cable
		14	A05B-2623-J211	A660-2008-T407#L14R53A	RP7A cable
				A660-4005-T765#L14R53A	RM7A cable
		20	A05B-2623-J212	A660-2008-T407#L20R53A	RP7A cable
				A660-4005-T765#L20R53A	RM7A cable
		30	A05B-2623-J213	A660-2008-T407#L30R53A	RP7A cable
				A660-4005-T765#L30R53A	RM7A cable
	R-1000iA/120F-7B Robot connection cable for J7 Non-flex (B-cabinet)	7	A05B-2623-J120	A660-2008-T092#L7R503B	RP7A cable
				A660-4005-T630#L7R503B	RM7A cable
		14	A05B-2623-J121	A660-2008-T092#L14R53B	RP7A cable
				A660-4005-T630#L14R53B	RM7A cable
		20	A05B-2623-J122	A660-2008-T092#L20R53B	RP7A cable
				A660-4005-T630#L20R53B	RM7A cable
		30	A05B-2623-J123	A660-2008-T092#L30R53B	RP7A cable
				A660-4005-T630#L30R53B	RM7A cable
	R-1000iA/120F-7B Robot connection cable for J7 Flex (B-cabinet)	7	A05B-2623-J130	A660-2008-T407#L7R503B	RP7A cable
				A660-4005-T764#L7R503B	RM7A cable
		14	A05B-2623-J131	A660-2008-T407#L14R53B	RP7A cable
				A660-4005-T764#L14R53B	RM7A cable
		20	A05B-2623-J132	A660-2008-T407#L20R53B	RP7A cable
				A660-4005-T764#L20R53B	RM7A cable
		30	A05B-2623-J133	A660-2008-T407#L30R53B	RP7A cable
				A660-4005-T764#L30R53B	RM7A cable
	R-1000iA/120F-7B Robot connection cable for J7 Non-flex, CE (B-cabinet)	7	A05B-2623-J220	A660-2008-T092#L7R503B	RP7A cable
				A660-4005-T639#L7R503B	RM7A cable
		14	A05B-2623-J221	A660-2008-T092#L14R53B	RP7A cable
				A660-4005-T639#L14R53B	RM7A cable
		20	A05B-2623-J222	A660-2008-T092#L20R53B	RP7A cable
				A660-4005-T639#L20R53B	RM7A cable
		30	A05B-2623-J223	A660-2008-T092#L30R53B	RP7A cable
				A660-4005-T639#L30R53B	RM7A cable
	R-1000iA/120F-7B Robot connection cable for J7 Flex, CE (B-cabinet)	7	A05B-2623-J230	A660-2008-T407#L7R503B	RP7A cable
				A660-4005-T765#L7R503B	RM7A cable
		14	A05B-2623-J231	A660-2008-T407#L14R53B	RP7A cable
				A660-4005-T765#L14R53B	RM7A cable
		20	A05B-2623-J232	A660-2008-T407#L20R53B	RP7A cable
				A660-4005-T765#L20R53B	RM7A cable
		30	A05B-2623-J233	A660-2008-T407#L30R53B	RP7A cable
				A660-4005-T765#L30R53B	RM7A cable

Cable No.	Name	Length (m)	Ordering Specification	FANUC Specification	Note
K54	R-1000iA/120F-7B Robot connection cable for J7+ServoGun Non-flex (A-cabinet)	7	A05B-2623-J140	A660-4005-T634#L7R503A	RP7A cable
				A660-4005-T635#L7R503A	RM7A cable
		14	A05B-2623-J141	A660-4005-T634#L14R53A	RP7A cable
				A660-4005-T635#L14R53A	RM7A cable
		20	A05B-2623-J142	A660-4005-T634#L20R53A	RP7A cable
				A660-4005-T635#L20R53A	RM7A cable
		30	A05B-2623-J143	A660-4005-T634#L30R53A	RP7A cable
				A660-4005-T635#L30R53A	RM7A cable
	R-1000iA/120F-7B Robot connection cable for J7+ServoGun Non-flex, CE (A-cabinet)	7	A05B-2623-J240	A660-4005-T634#L7R503A	RP7A cable
				A660-4005-T640#L7R503A	RM7A cable
		14	A05B-2623-J241	A660-4005-T634#L14R53A	RP7A cable
				A660-4005-T640#L14R53A	RM7A cable
		20	A05B-2623-J242	A660-4005-T634#L20R53A	RP7A cable
				A660-4005-T640#L20R53A	RM7A cable
		30	A05B-2623-J243	A660-4005-T634#L30R53A	RP7A cable
				A660-4005-T640#L30R53A	RM7A cable
	R-1000iA/120F-7B Robot connection cable for J7+ServoGun Non-flex (B-cabinet)	7	A05B-2623-J160	A660-4005-T634#L7R503B	RP7A cable
				A660-4005-T635#L7R503B	RM7A cable
		14	A05B-2623-J161	A660-4005-T634#L14R53B	RP7A cable
				A660-4005-T635#L14R53B	RM7A cable
		20	A05B-2623-J162	A660-4005-T634#L20R53B	RP7A cable
				A660-4005-T635#L20R53B	RM7A cable
		30	A05B-2623-J163	A660-4005-T634#L30R53B	RP7A cable
				A660-4005-T635#L30R53B	RM7A cable
	R-1000iA/120F-7B Robot connection cable for J7+ServoGun Non-flex, CE (B-cabinet)	7	A05B-2623-J260	A660-4005-T634#L7R503B	RP7A cable
				A660-4005-T640#L7R503B	RM7A cable
		14	A05B-2623-J261	A660-4005-T634#L14R53B	RP7A cable
				A660-4005-T640#L14R53B	RM7A cable
		20	A05B-2623-J262	A660-4005-T634#L20R53B	RP7A cable
				A660-4005-T640#L20R53B	RM7A cable
		30	A05B-2623-J263	A660-4005-T634#L30R53B	RP7A cable
				A660-4005-T640#L30R53B	RM7A cable
K80	Line Tracking Cable (A-cabinet)	7	A05B-2601-J380	A660-2007-T380#L7R503A	(Pulsecoder ~ controller), for Wide mini / Incremental
		14	A05B-2601-J381	A660-2007-T380#L14R53A	
		20	A05B-2601-J382	A660-2007-T380#L20R53A	
		30	A05B-2601-J383	A660-2007-T380#L30R53A	
		7	A05B-2601-J385	A660-2007-T381#L7R503A	(pulse Multiplexer ~ controller), for Wide mini / Incremental
		14	A05B-2601-J386	A660-2007-T381#L14R53A	
		20	A05B-2601-J387	A660-2007-T381#L20R53A	
		30	A05B-2601-J388	A660-2007-T381#L30R53A	
		7	A05B-2601-J220	A660-2007-T563#L7R503A	αA1000S/ Wide-mini board
		14	A05B-2601-J221	A660-2007-T563#L14R53A	
		20	A05B-2601-J222	A660-2007-T563#L20R53A	
		30	A05B-2601-J223	A660-2007-T563#L30R53A	

Cable No.	Name	Length (m)	Ordering Specification	FANUC Specification	Note
K81		7	A05B-2601-J370	A660-2007-T456#L7R503A	(Pulsecoder ~ controller), for Mini slot / Incremental
		14	A05B-2601-J371	A660-2007-T456#L14R53A	
		20	A05B-2601-J372	A660-2007-T456#L20R53A	
		30	A05B-2601-J373	A660-2007-T456#L30R53A	
		7	A05B-2601-J375	A660-2007-T457#L7R503A	(pulse Multiplexer ~ controller), for Mini slot / Incremental
		14	A05B-2601-J376	A660-2007-T457#L14R53A	
		20	A05B-2601-J377	A660-2007-T457#L20R53A	
		30	A05B-2601-J378	A660-2007-T457#L30R53A	
		7	A05B-2601-J210	A660-2007-T564#L7R503A	αA1000S 1 pcs /Mini board
		14	A05B-2601-J211	A660-2007-T564#L14R53A	
		20	A05B-2601-J212	A660-2007-T564#L20R53A	
		30	A05B-2601-J213	A660-2007-T564#L30R53A	
K82		7	A05B-2601-J260	A660-4005-T330#L7R503A	αA1000S 2 pcs /Mini board
		14	A05B-2601-J261	A660-4005-T330#L14R53A	
		20	A05B-2601-J262	A660-4005-T330#L20R53A	
		30	A05B-2601-J263	A660-4005-T330#L30R53A	
K83		7	A05B-2601-J270	A660-2007-T582#L7R503A	αA1000S / Main board
		14	A05B-2601-J271	A660-2007-T582#L14R53A	
		20	A05B-2601-J272	A660-2007-T582#L20R53A	
		30	A05B-2601-J273	A660-2007-T582#L30R53A	
K80	Line Tracking Cable (B-cabinet)	7	A05B-2603-J380	A660-2007-T380#L7R503B	(Pulsecoder ~ controller), for Wide mini / Incremental
		14	A05B-2603-J381	A660-2007-T380#L14R53B	
		20	A05B-2603-J382	A660-2007-T380#L20R53B	
		30	A05B-2603-J383	A660-2007-T380#L30R53B	
		7	A05B-2603-J385	A660-2007-T381#L7R503B	(pulse Multiplexer ~ controller), for Wide mini / Incremental
		14	A05B-2603-J386	A660-2007-T381#L14R53B	
		20	A05B-2603-J387	A660-2007-T381#L20R53B	
		30	A05B-2603-J388	A660-2007-T381#L30R53B	
		7	A05B-2603-J220	A660-2007-T563#L7R503B	αA1000S/ Wide-mini board
		14	A05B-2603-J221	A660-2007-T563#L14R53B	
		20	A05B-2603-J222	A660-2007-T563#L20R53B	
		30	A05B-2603-J223	A660-2007-T563#L30R53B	
K81		7	A05B-2603-J370	A660-2007-T456#L7R503B	(Pulsecoder ~ controller), for Mini slot / Incremental
		14	A05B-2603-J371	A660-2007-T456#L14R53B	
		20	A05B-2603-J372	A660-2007-T456#L20R53B	
		30	A05B-2603-J373	A660-2007-T456#L30R53B	
		7	A05B-2603-J375	A660-2007-T457#L7R503B	(pulse Multiplexer ~ controller), for Mini slot / Incremental
		14	A05B-2603-J376	A660-2007-T457#L14R53B	
		20	A05B-2603-J377	A660-2007-T457#L20R53B	
		30	A05B-2603-J378	A660-2007-T457#L30R53B	
		7	A05B-2603-J210	A660-2007-T564#L7R503B	αA1000S 1 pcs /Mini board
		14	A05B-2603-J211	A660-2007-T564#L14R53B	
		20	A05B-2603-J212	A660-2007-T564#L20R53B	
		30	A05B-2603-J213	A660-2007-T564#L30R53B	
K82		7	A05B-2603-J260	A660-4005-T330#L7R503B	αA1000S 2 pcs /Mini board
		14	A05B-2603-J261	A660-4005-T330#L14R53B	
		20	A05B-2603-J262	A660-4005-T330#L20R53B	
		30	A05B-2603-J263	A660-4005-T330#L30R53B	
K83		7	A05B-2603-J270	A660-2007-T582#L7R503B	αA1000S / Main board
		14	A05B-2603-J271	A660-2007-T582#L14R53B	
		20	A05B-2603-J272	A660-2007-T582#L20R53B	
		30	A05B-2603-J273	A660-2007-T582#L30R53B	

B TOTAL CONNECTION DIAGRAM

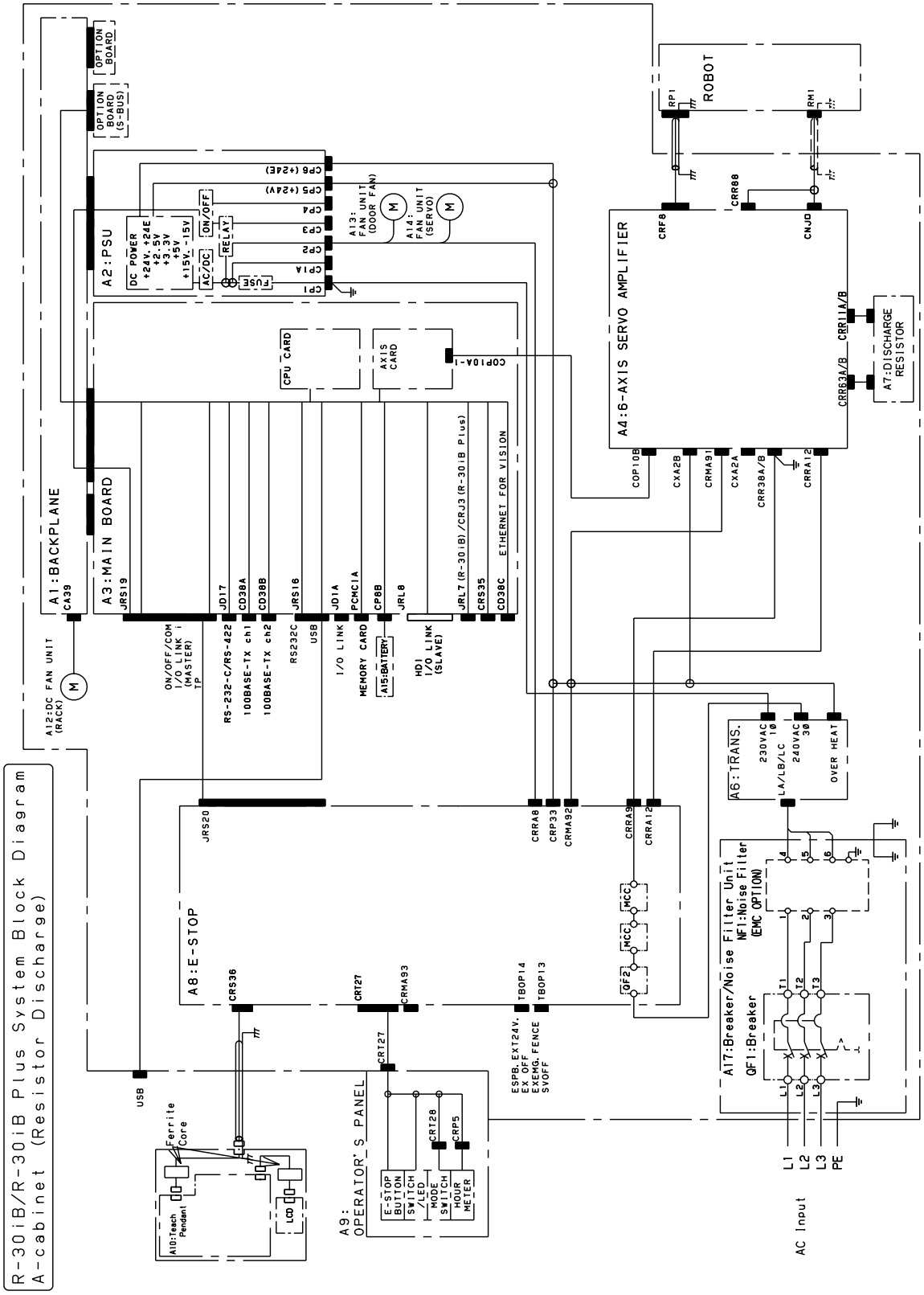

Fig.B (a) System block diagram (A-cabinet / Resistor discharge)

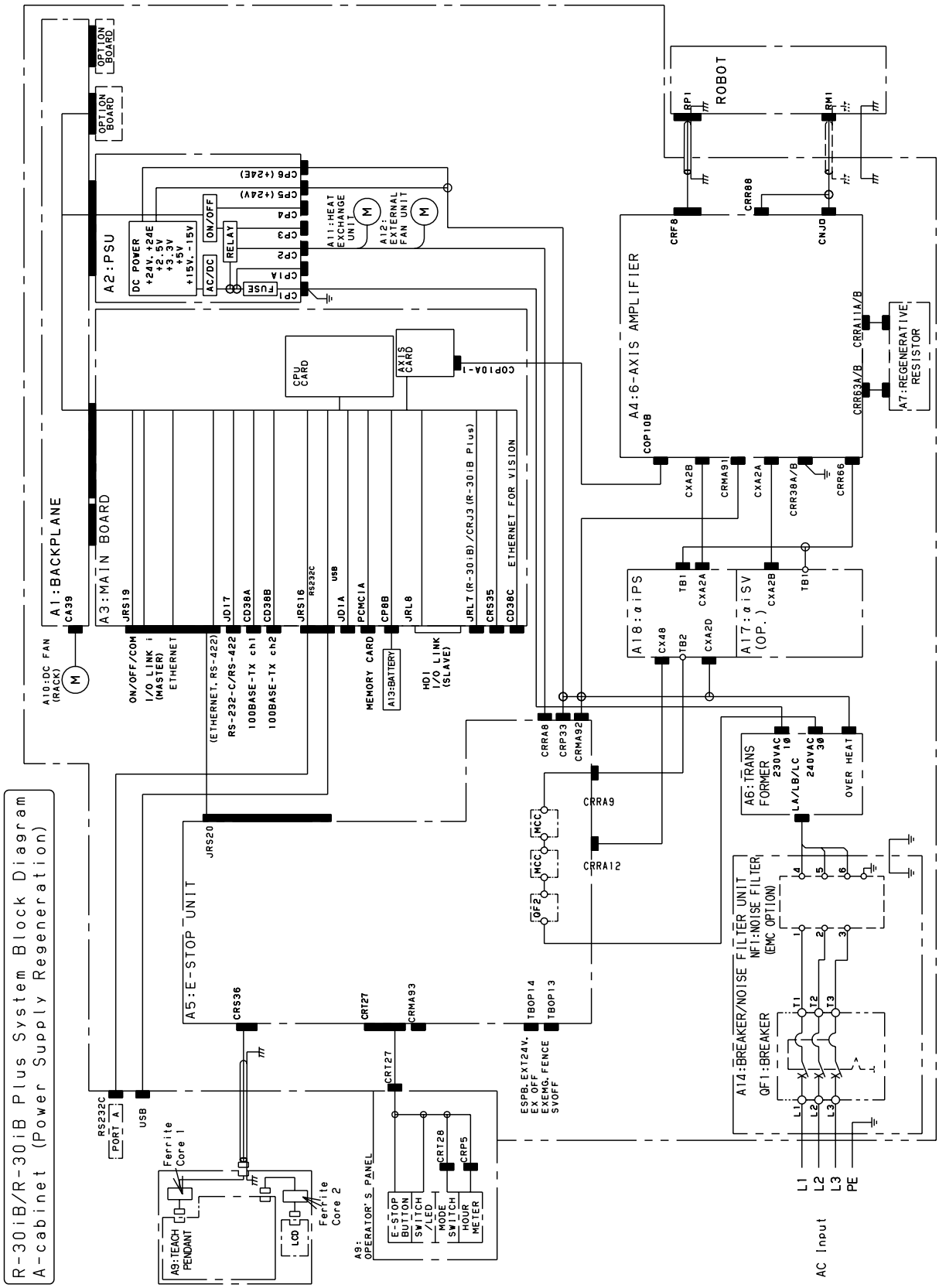

Fig.B (b) System block diagram (A-cabinet / Power supply regeneration)

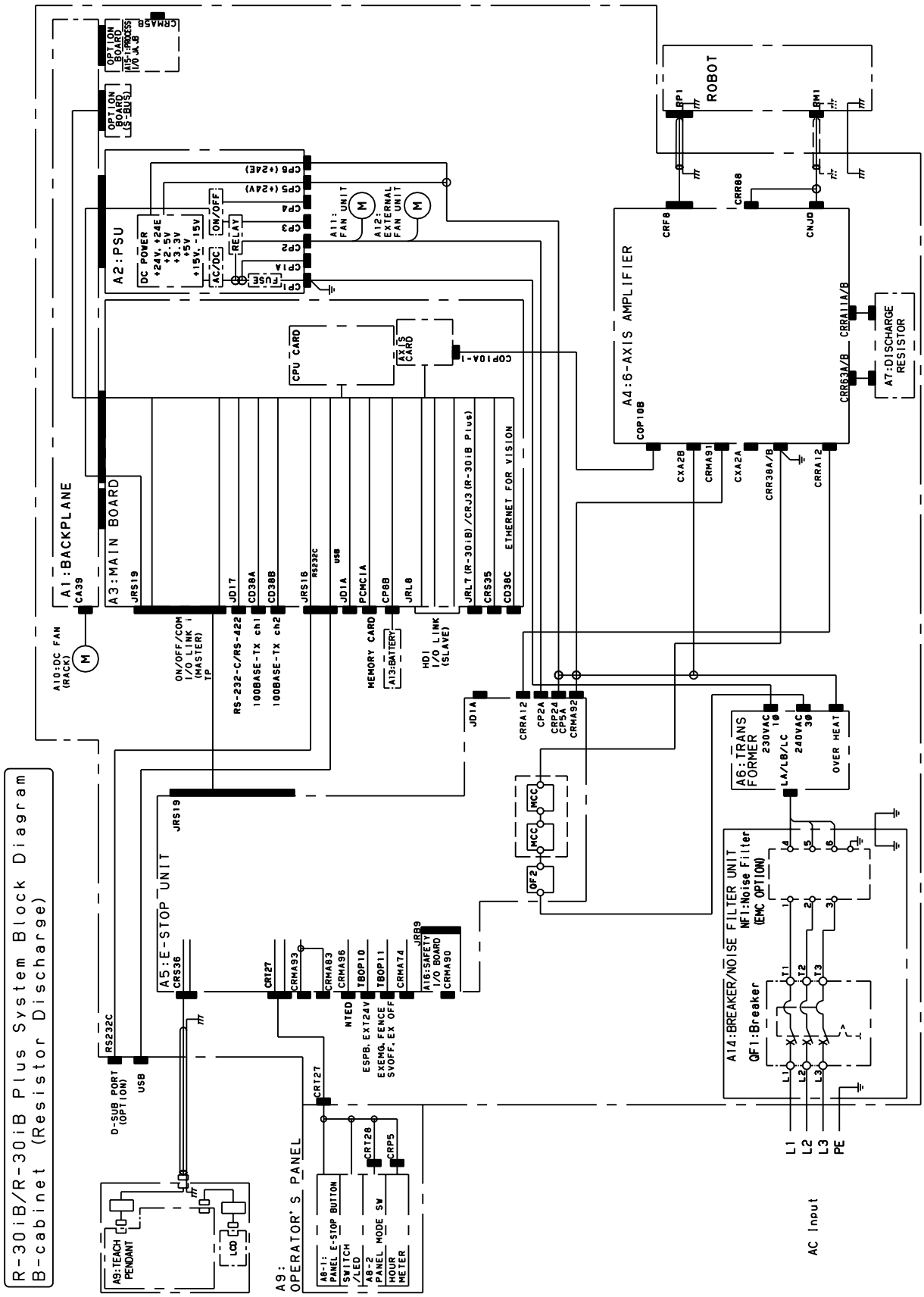

Fig.B (c) System block diagram (B-cabinet / Resistor discharge)

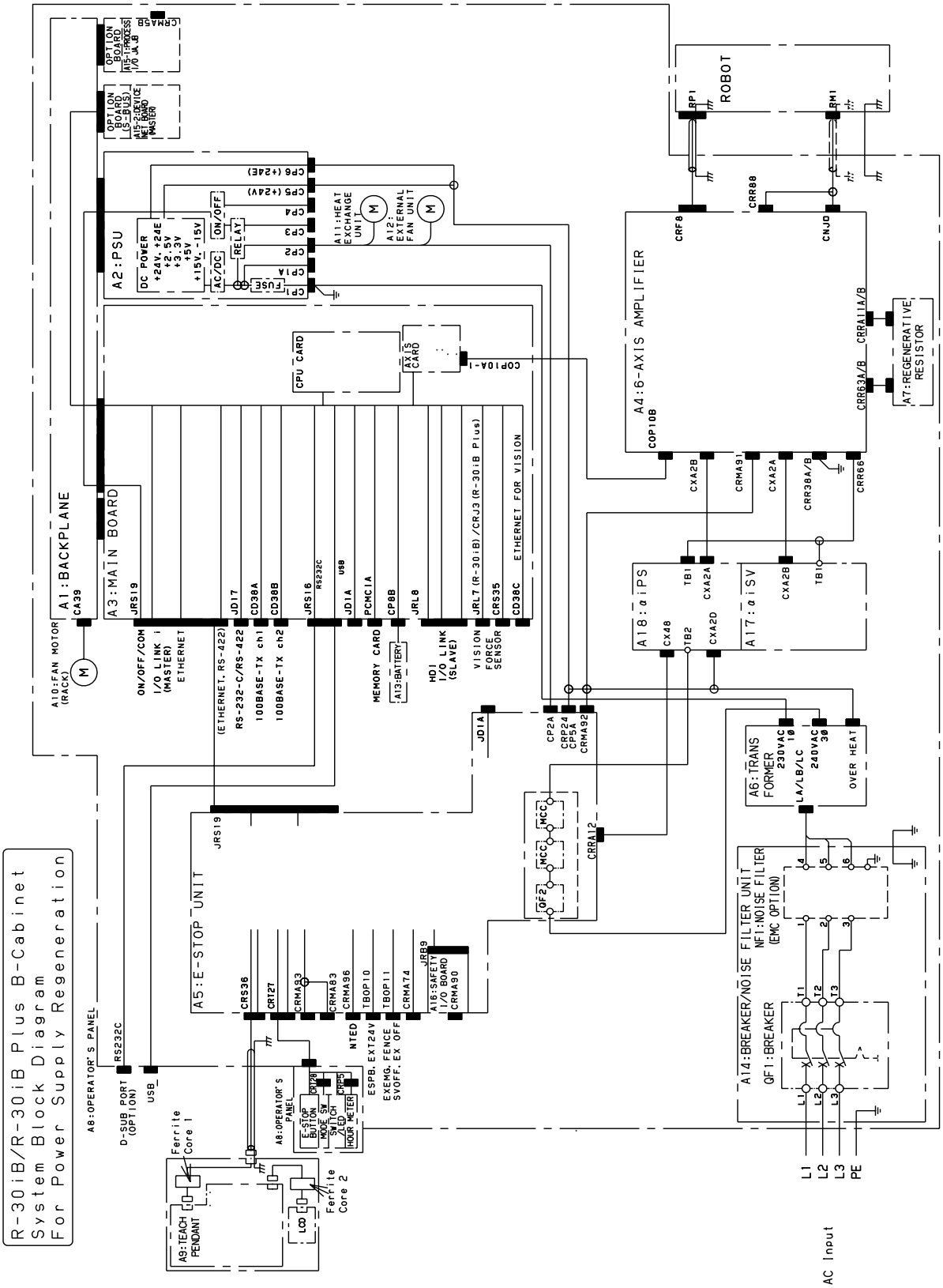

Fig.B (d) System block diagram (B-cabinet / Power supply regeneration)

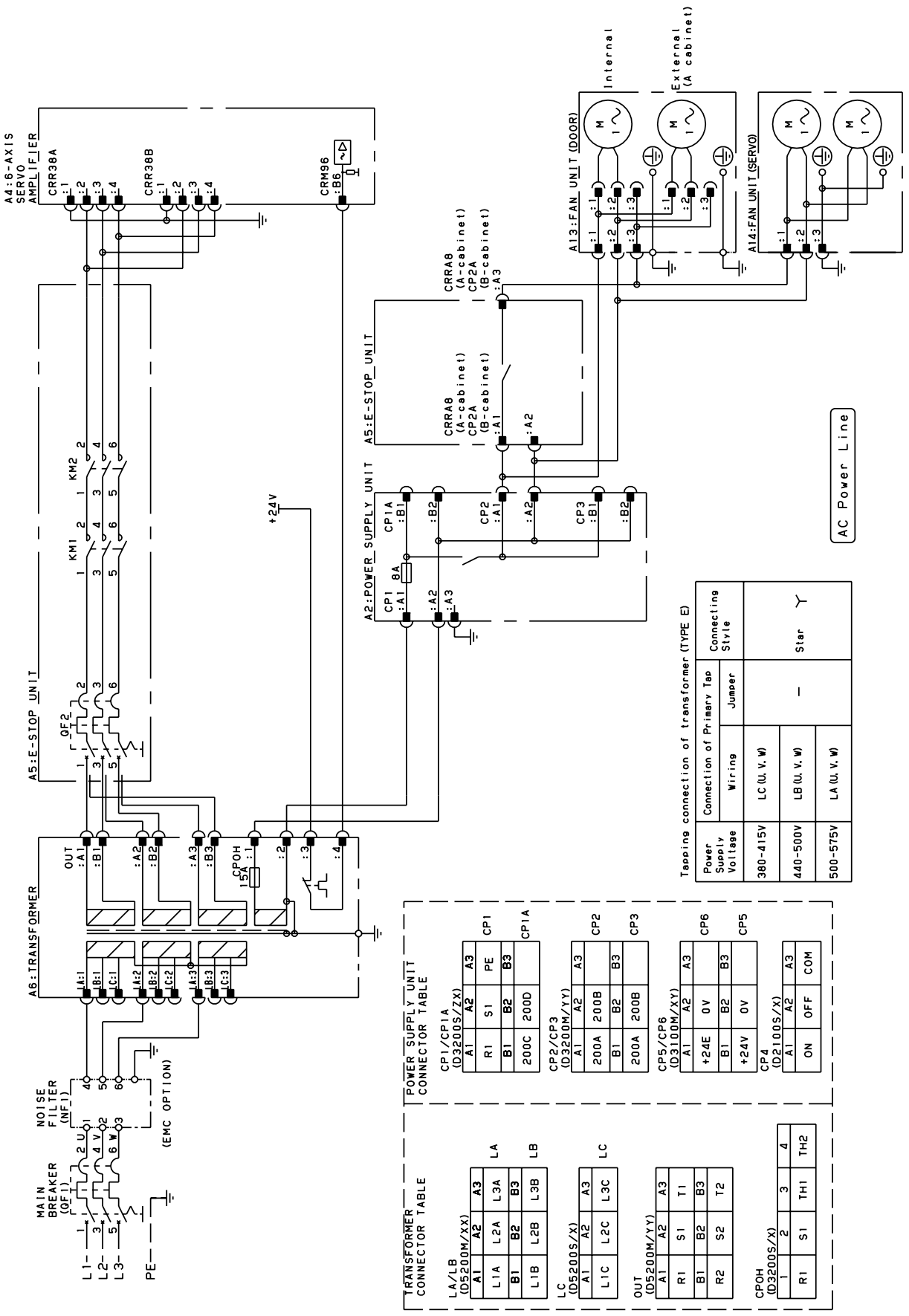

Fig.B (e) AC power line connection diagram (in case of TYPE E transformer)

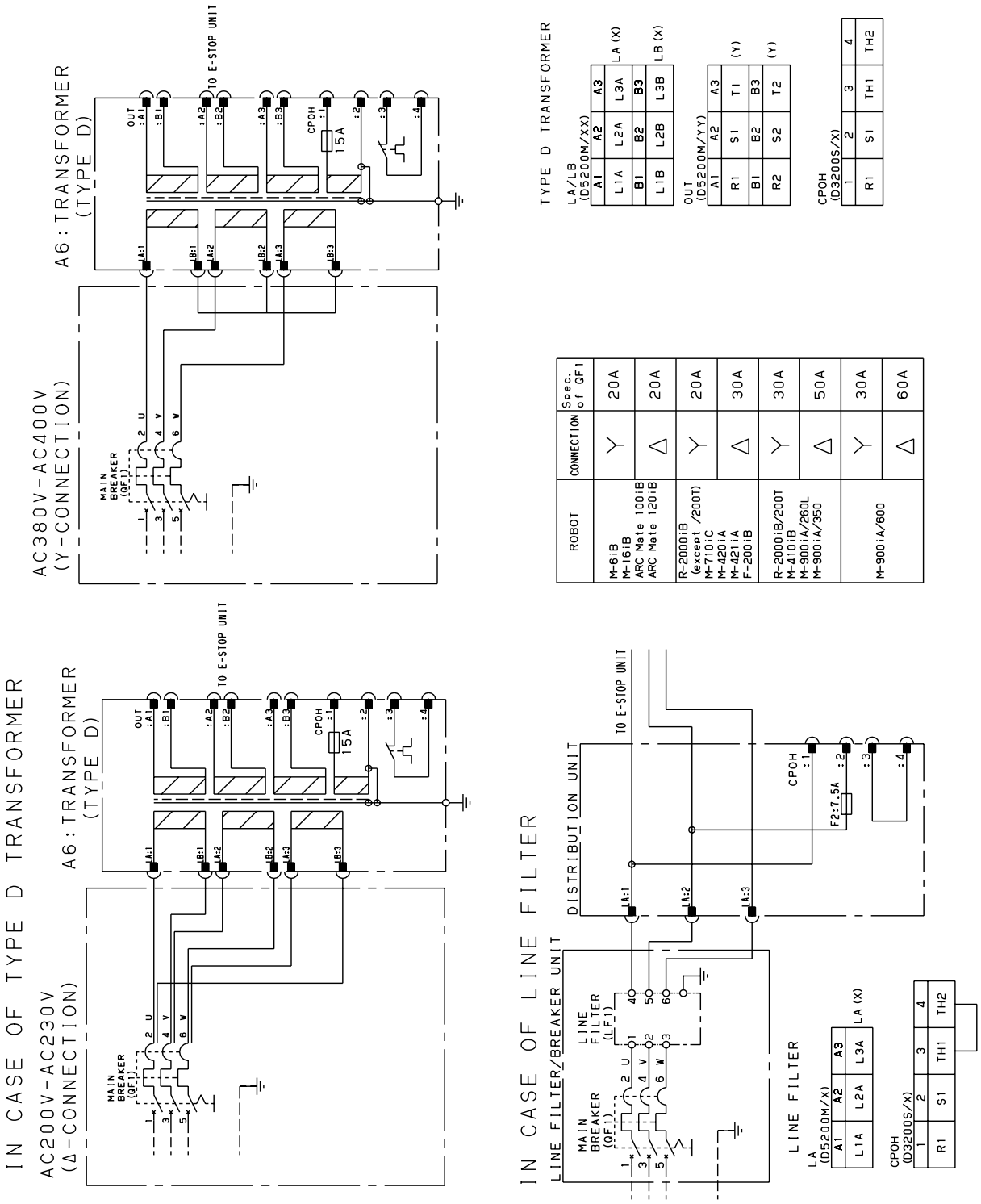

Fig.B (f) AC power line connection diagram (in case of TYPE D transformer or line filter)

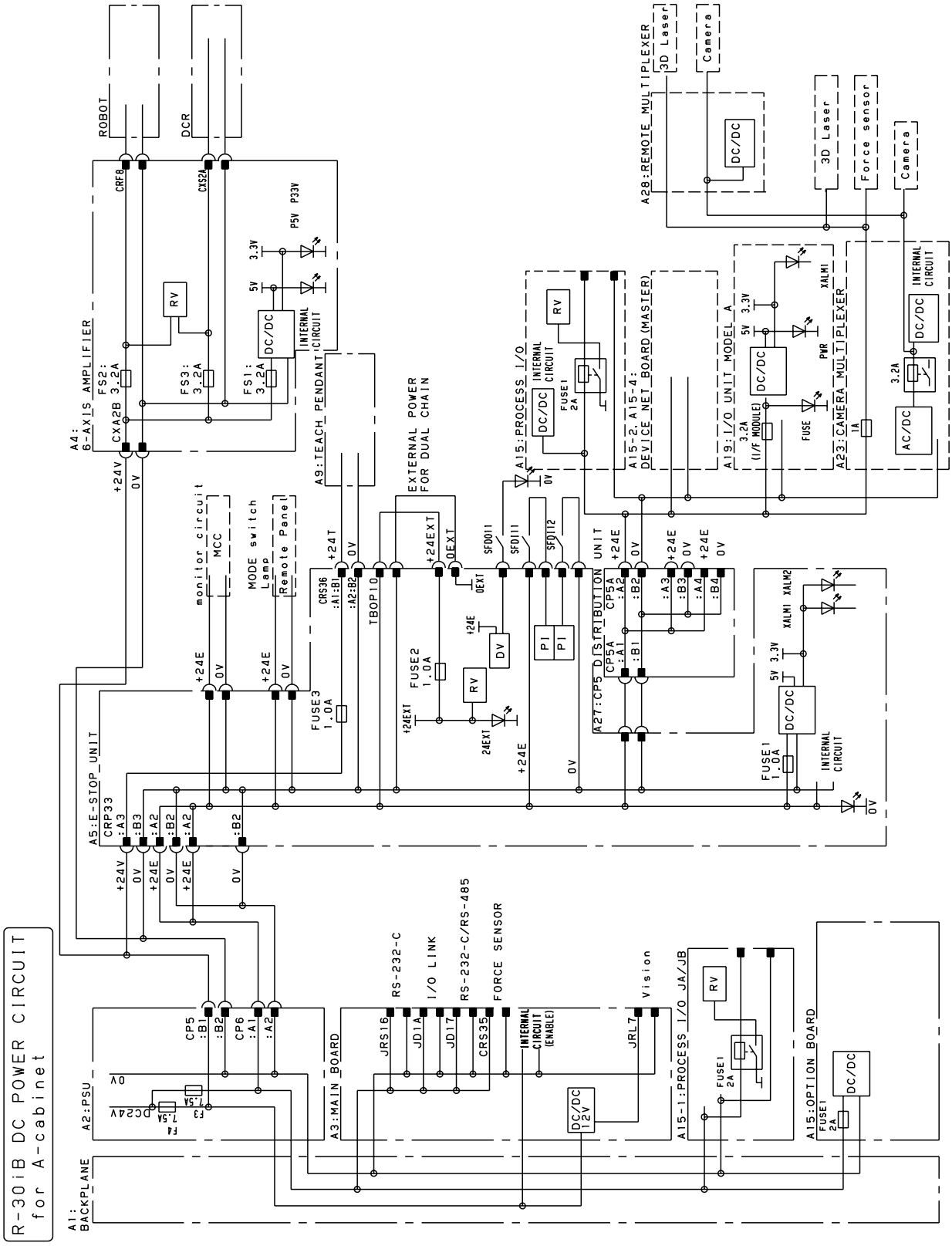

Fig.B (g) DC power line connection diagram (R-30iB A-cabinet)

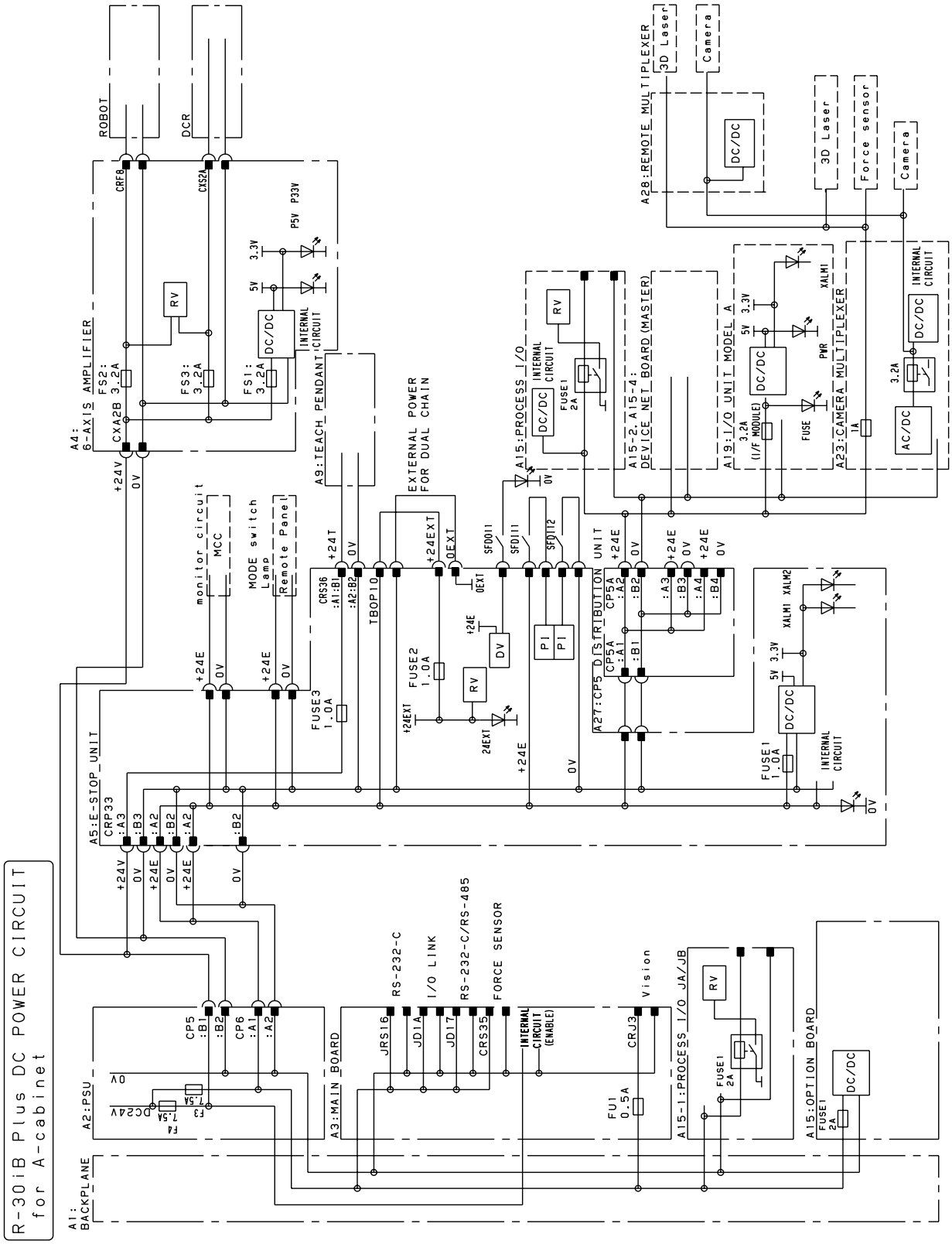

Fig.B (h) DC power line connection diagram (R-30iB Plus A-cabinet)

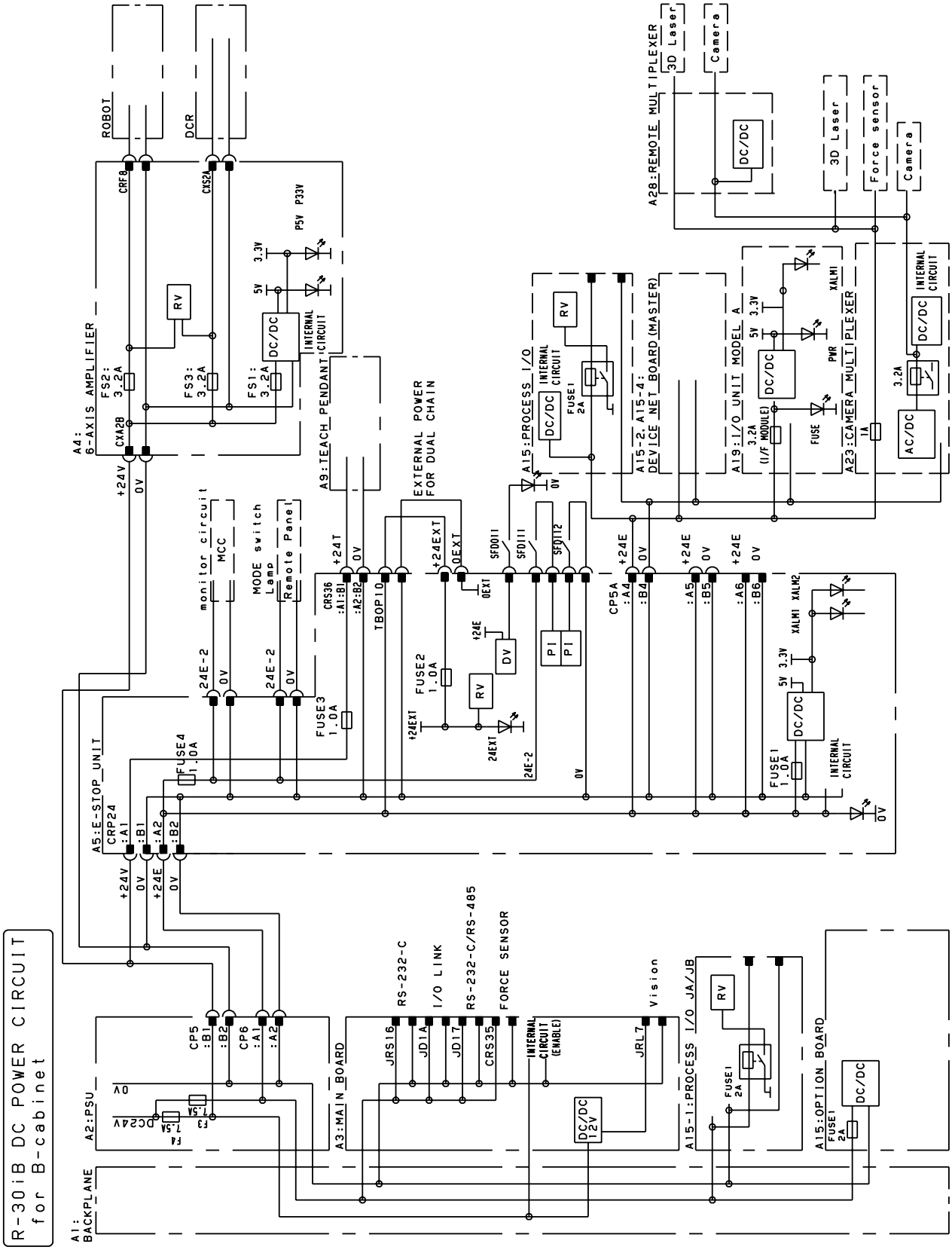

Fig.B (i) DC power line connection diagram (R-30iB B-cabinet)

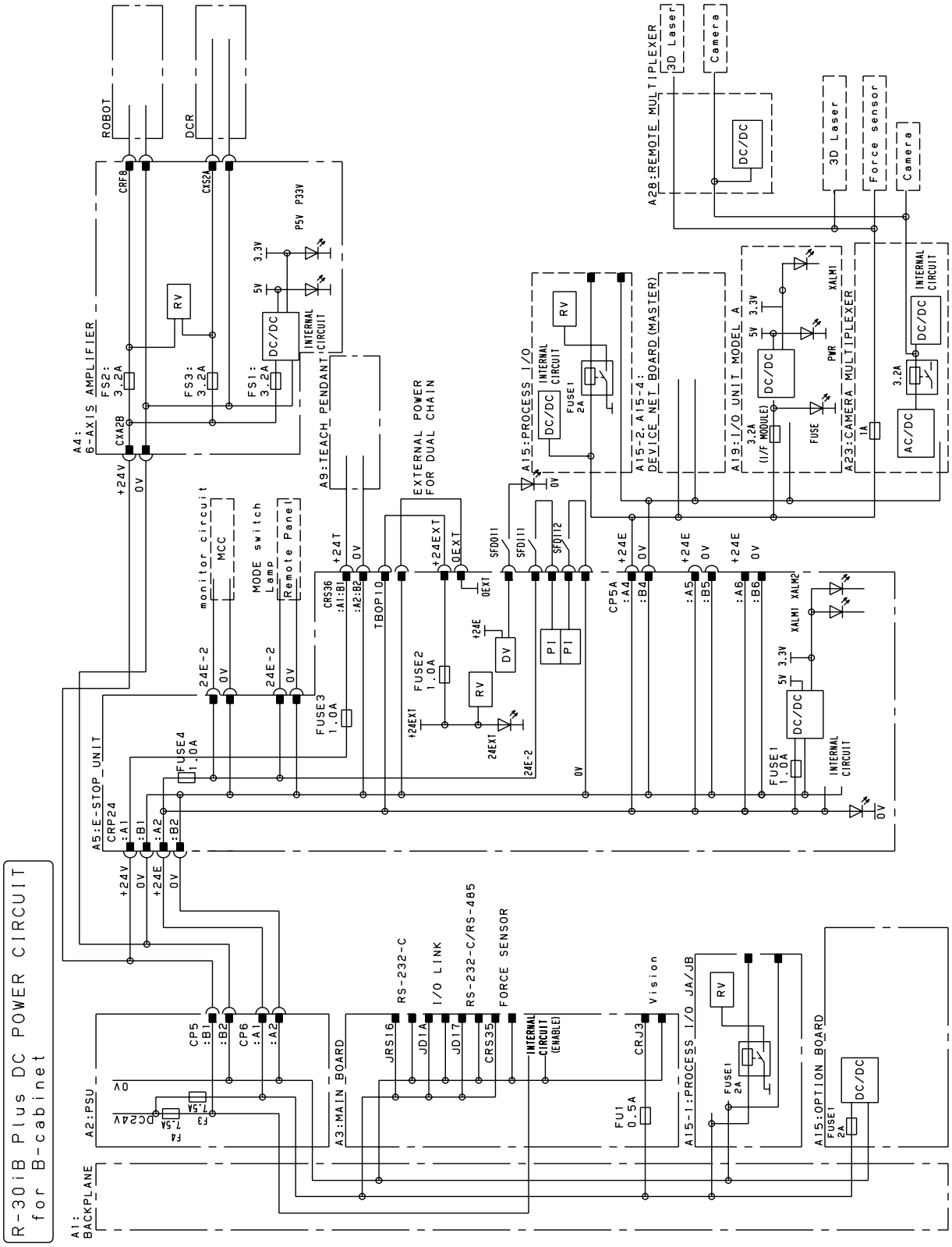

Fig.B (j) DC power line connection diagram (R-30iB Plus B-cabinet)

E-STOP CIRCUIT FOR A-CABINET
RESISTOR DISCHARGE

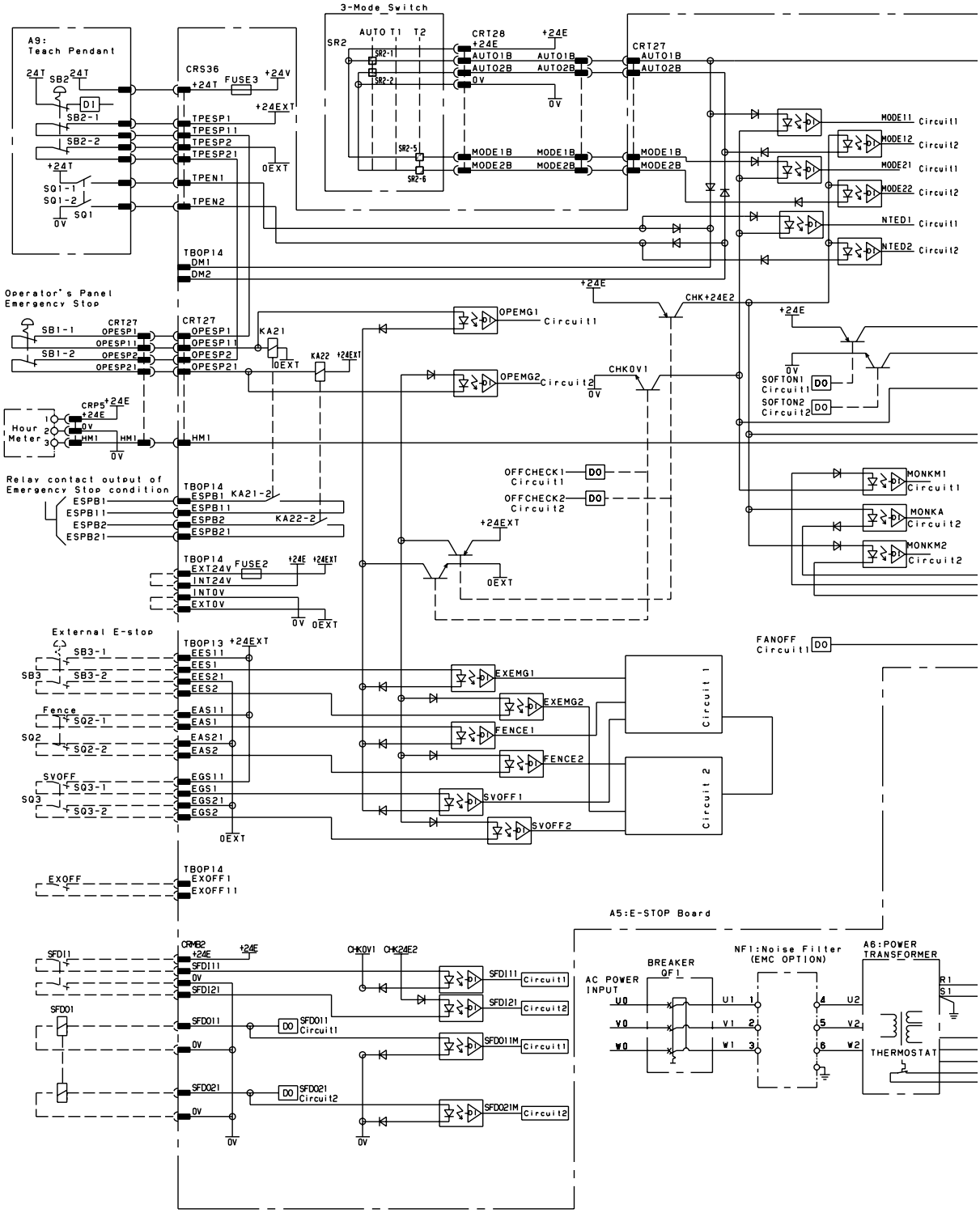

Fig.B (k) Emergency stop circuit connection diagram (A-cabinet/Resistor discharge)

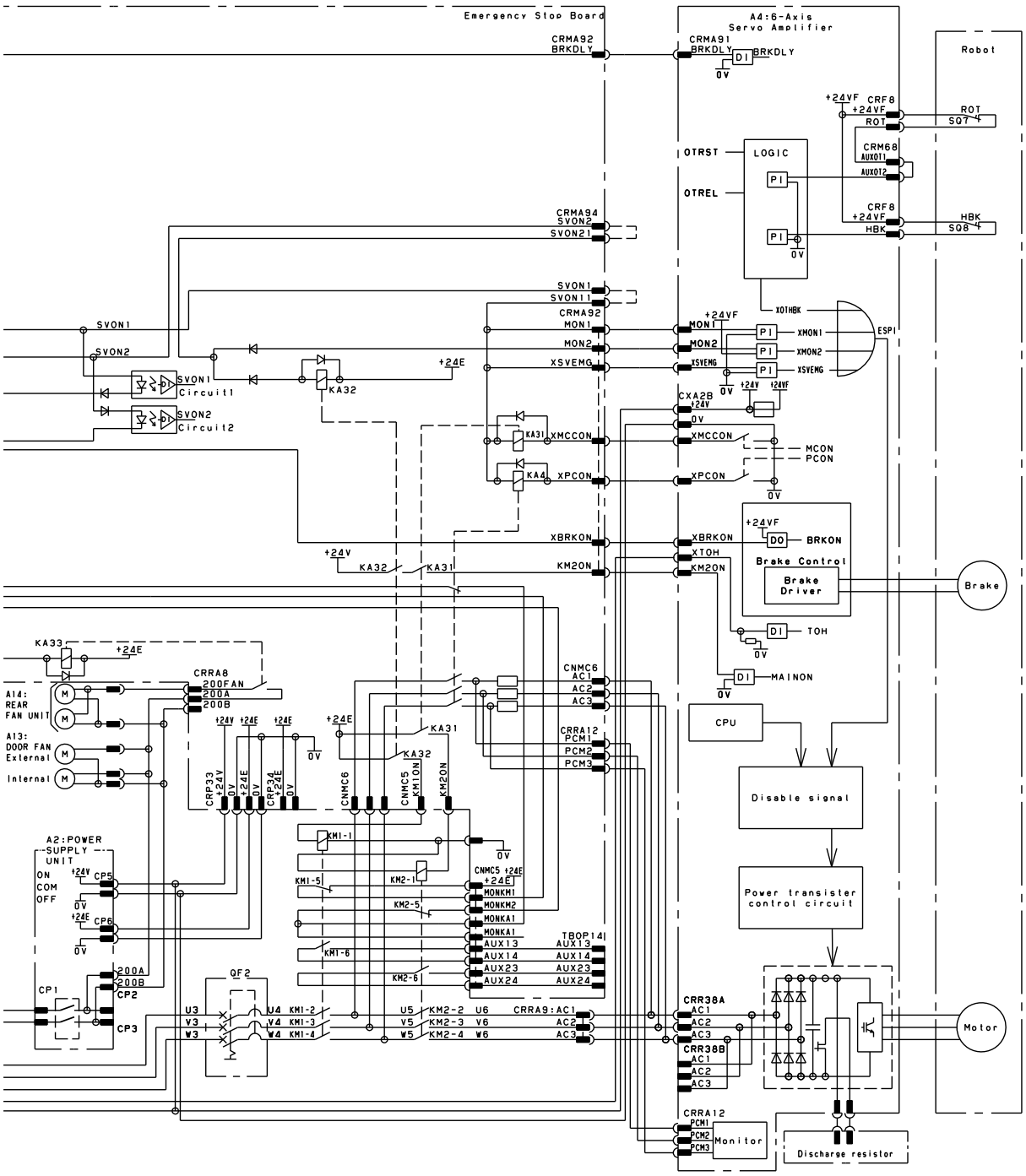
Emergency Stop Board
A4:6-Axis Servo Amplifier
Robot
CRMA92 BRKDLY
CRMA91 BRKDLY
DI
BRKDLY
0V
+24VF
CRF8
ROT
SQ7
CRM68
AUXOT1
AUXOT2
OTRST
OTREL
LOGIC
PI
HBK
SQ8
CRMA94 SVON2
SVON21
SVON1
SVON11
CRMA92
MON1
MON2
XSVEMG
XOTHBK
ESP1
XMON1
XMON2
CXA2B
XMCCON
MCON
PCON
XPCON
XBRKON
XTOH
KM2ON
DO
BRKON
Brake Control
Brake Driver
Brake
TOH
MAINON
CPU
Disable signal
Power transister control circuit
Motor
Discharge resistor
Monitor
Circuit1
Circuit2
KA32
KA31
KA4
KA33
+24E
+24V
A14: REAR FAN UNIT
A13: DOOR FAN External
Internal
CRRA8
200FAN
200A
200B
CRP33
CRP34
CNMC6
CNMC5
KM1ON
CNMC5 +24E
MONKM1
MONKM2
MONKA1
AUX13
AUX14
AUX23
AUX24
TBOP14
CRRA12
PCM1
PCM2
PCM3
A2:POWER SUPPLY UNIT
ON
COM
OFF
CP5
CP6
CP1
CP2
CP3
QF2
KM1-1
KM1-2
KM1-3
KM1-4
KM1-5
KM1-6
KM2-1
KM2-2
KM2-3
KM2-4
KM2-5
KM2-6
U3
V3
W3
U4
V4
W4
U5
V5
W5
U6
V6
W6
CRRA9:AC1
AC2
AC3
CRR38A
CRR38B

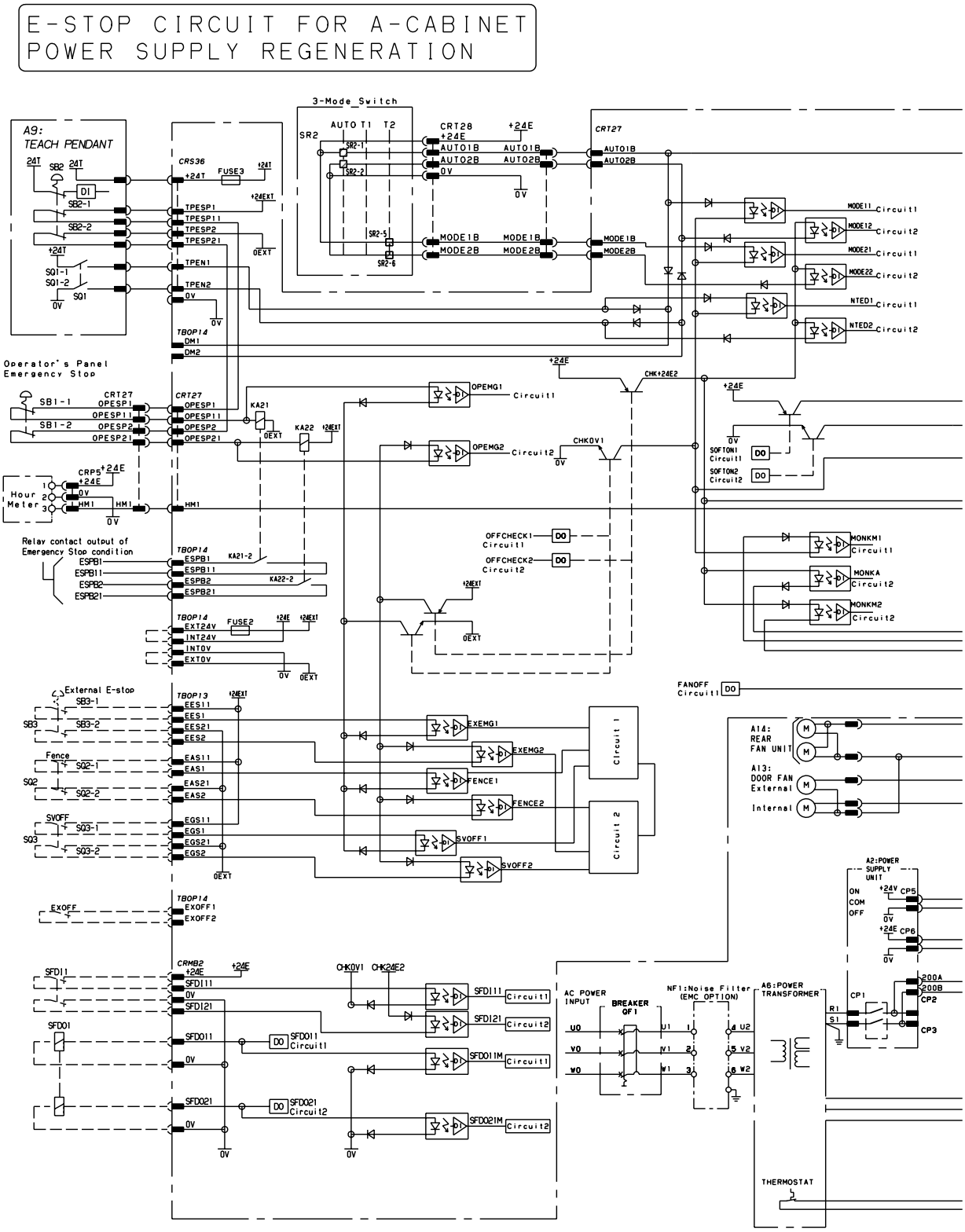

Fig.B (l) Emergency stop circuit connection diagram (A-cabinet/Power supply regeneration)

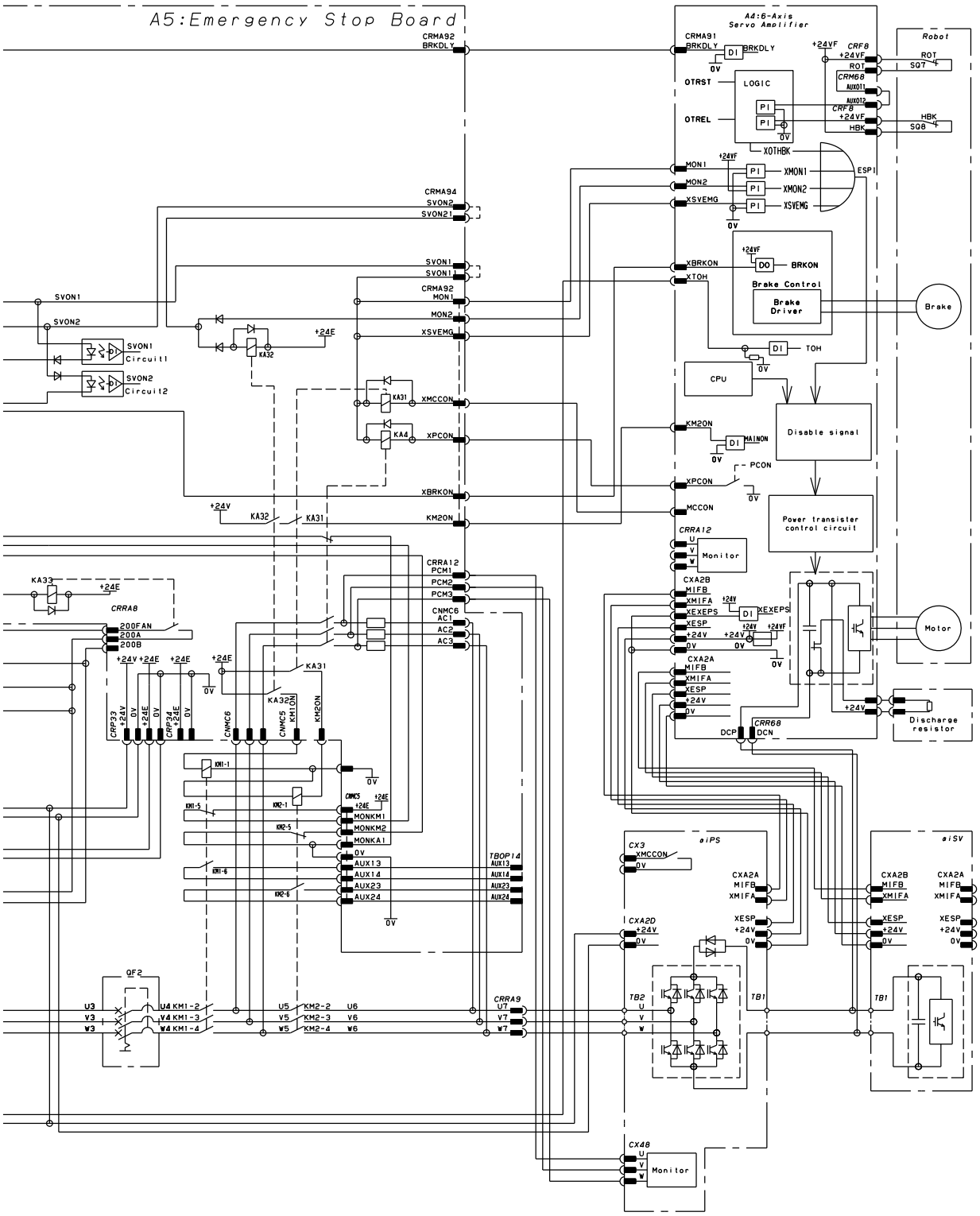
A5:Emergency Stop Board
A4:6-Axis Servo Amplifier
Robot
LOGIC
Brake Control
Brake Driver
Brake
CPU
Disable signal
Power transister control circuit
Monitor
Motor
Discharge resistor
Circuit1
Circuit2
aIPS
aISV

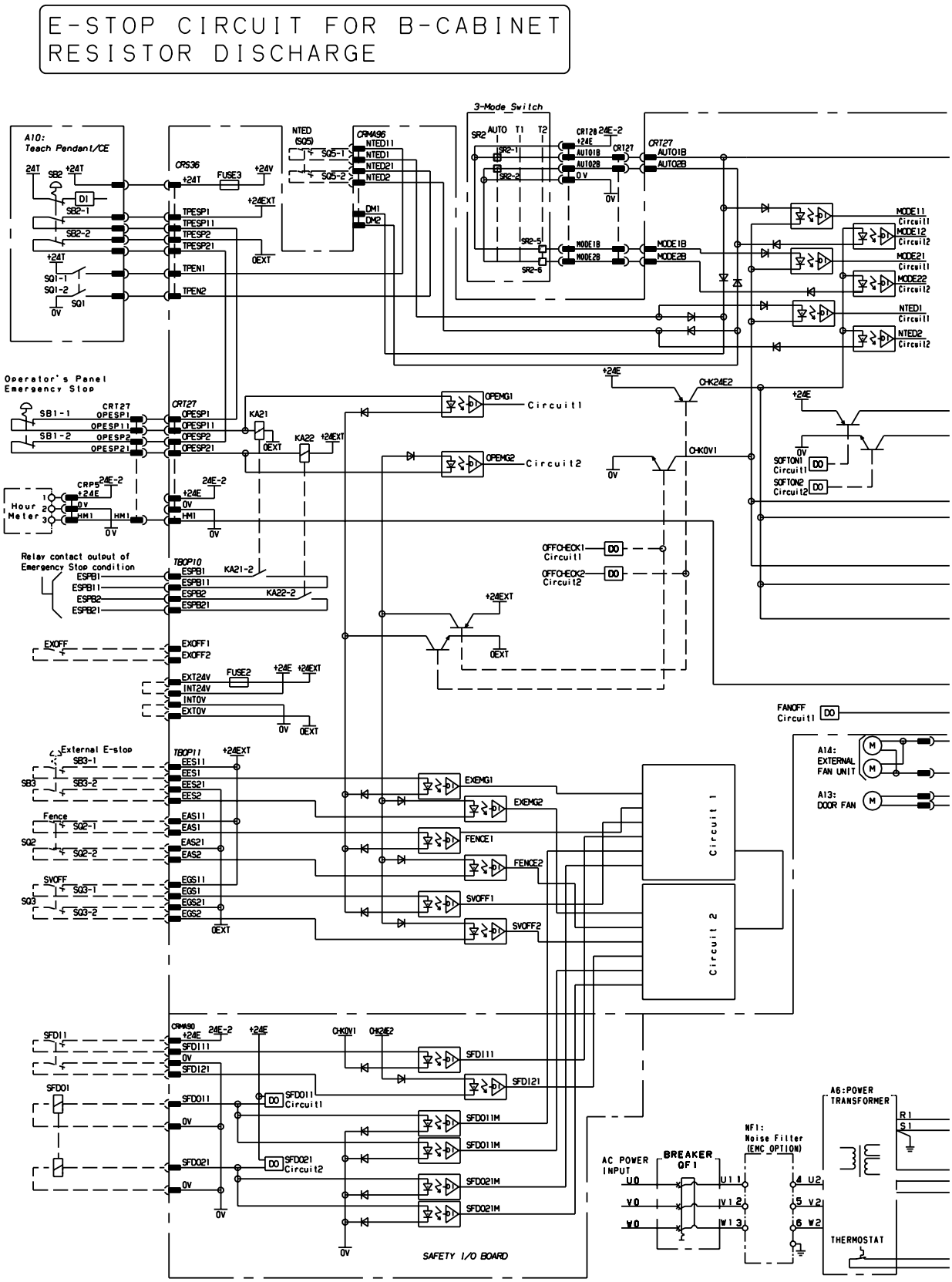

Fig.B (m) Emergency stop circuit connection diagram (B-cabinet/Resistor discharge)

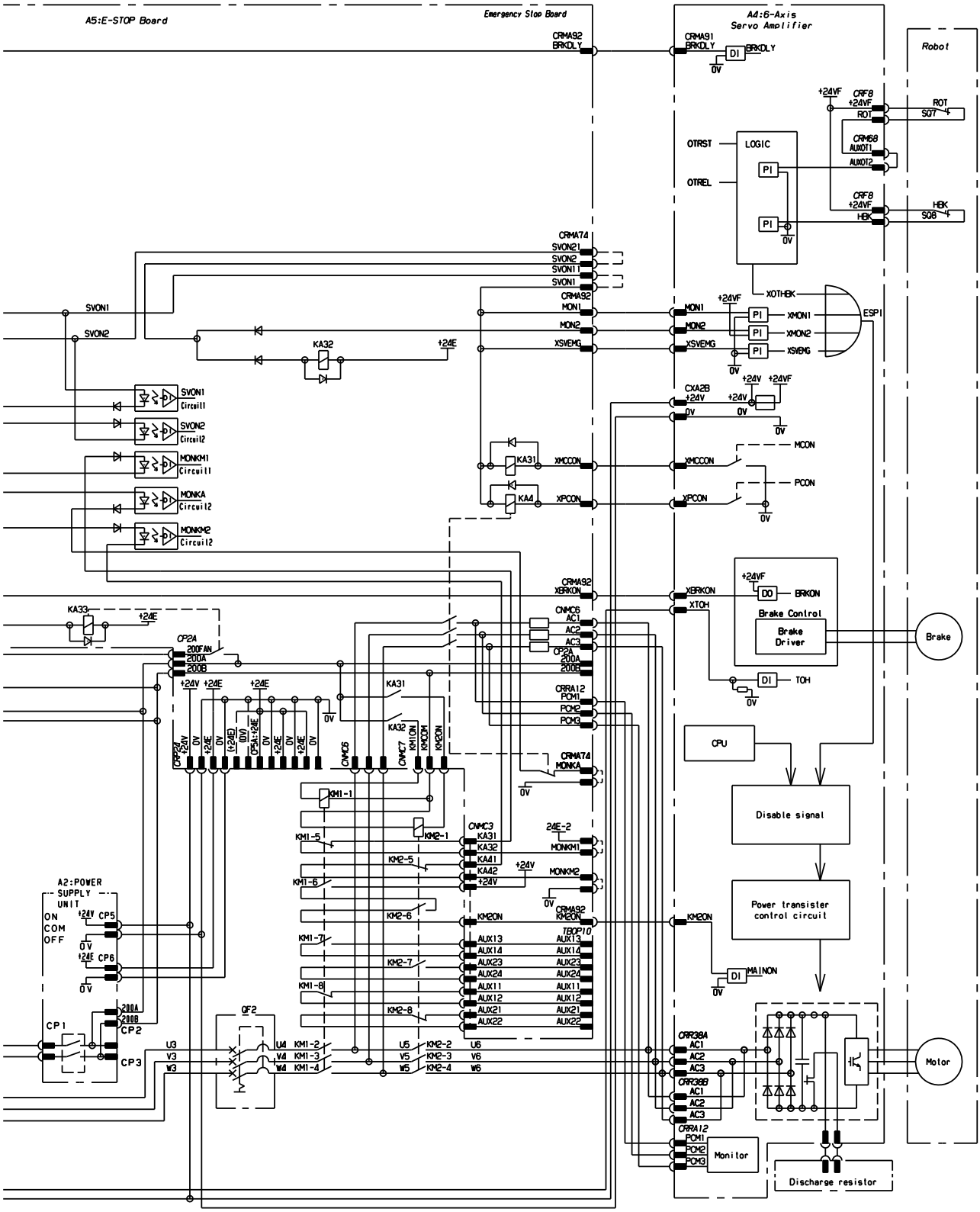
A5:E-STOP Board
Emergency Stop Board
A4:6-Axis Servo Amplifier
Robot
LOGIC
OTRST
OTREL
XOTHBK
ESPI
XMON1
XMON2
XSVEMG
MCON
PCON
Brake Control
Brake Driver
Brake
CPU
Disable signal
Power transister control circuit
Monitor
Discharge resistor
Motor
A2:POWER SUPPLY UNIT
ON
COM
OFF
SVON1
SVON2
KA32
KA33
KA31
KA4
XMCCON
XPCON
XBRKON
BRKON
XTOH
TOH
MAINON
KM2ON
KM1-1
KM1-2
KM1-3
KM1-4
KM1-5
KM1-6
KM1-7
KM1-8
KM2-1
KM2-2
KM2-3
KM2-4
KM2-5
KM2-6
KM2-7
KM2-8
CP1
CP2
CP3
CP5
CP6
QF2

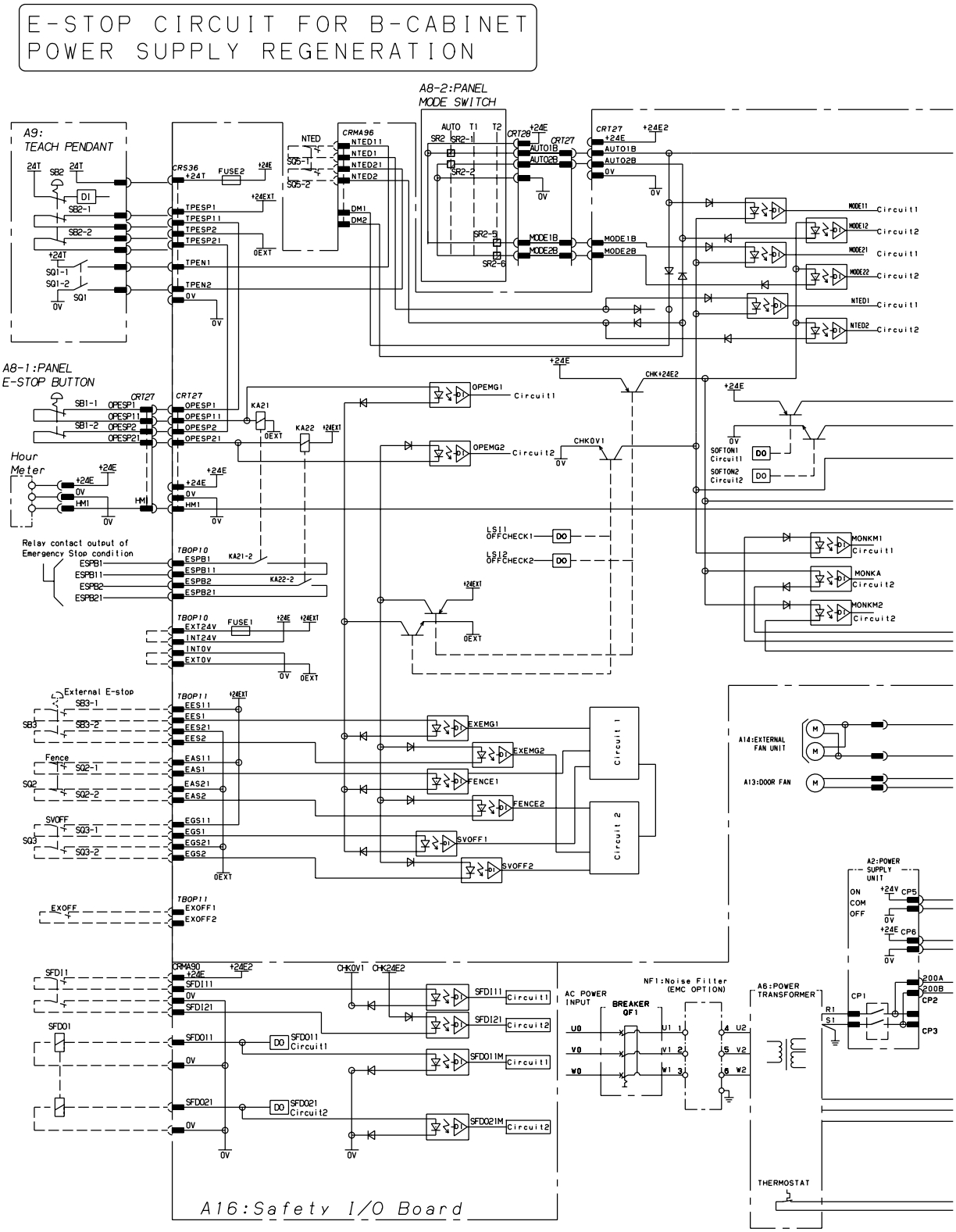

Fig.B (n) Emergency stop circuit connection diagram (B-cabinet/Power supply regeneration)

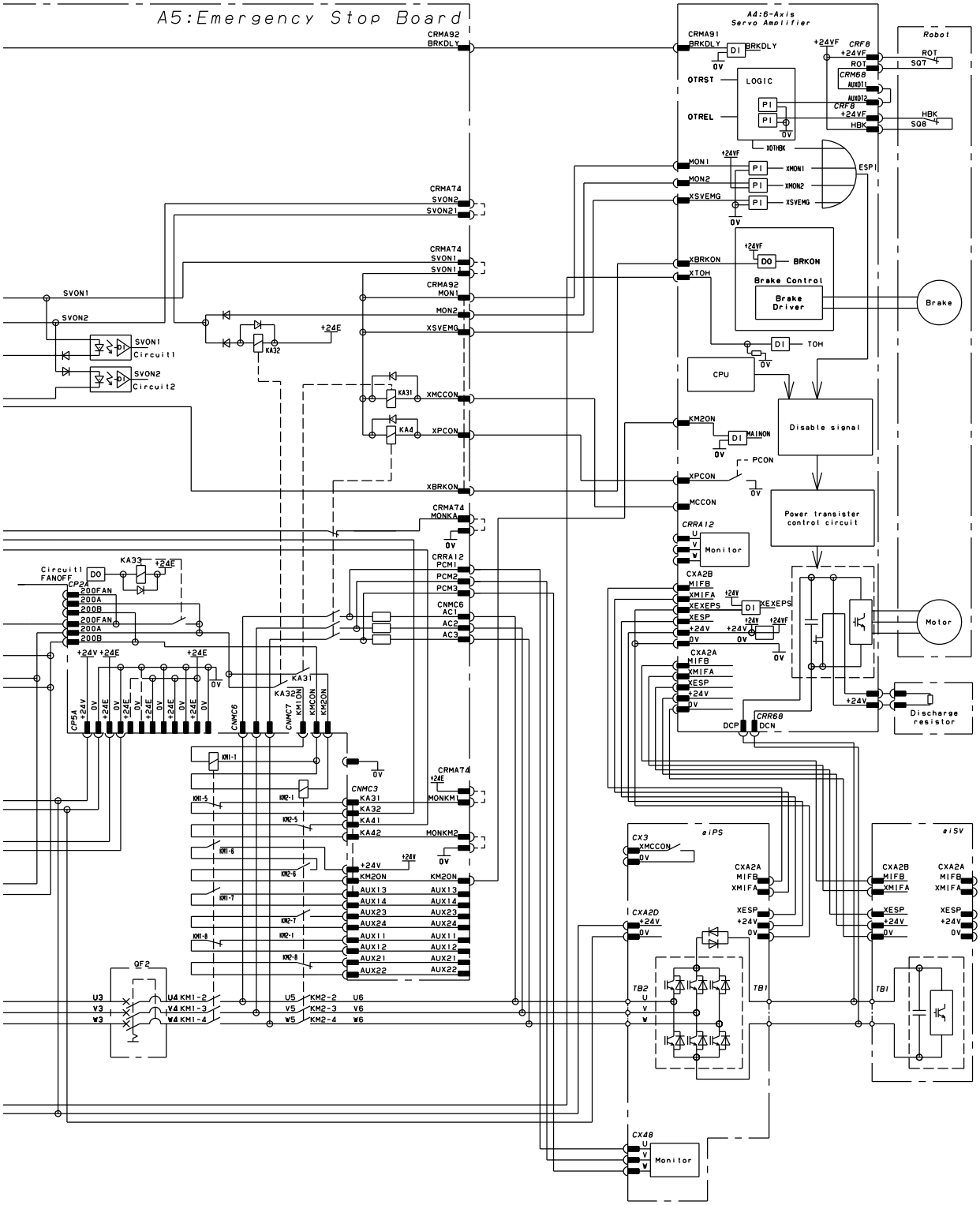
A5:Emergency Stop Board
A4:6-Axis Servo Amplifier
Robot
LOGIC
Brake Control
Brake Driver
Brake
CPU
Disable signal
Power transister control circuit
Monitor
Motor
Discharge resistor
Circuit1
Circuit2
aIPS
aISV
QF2

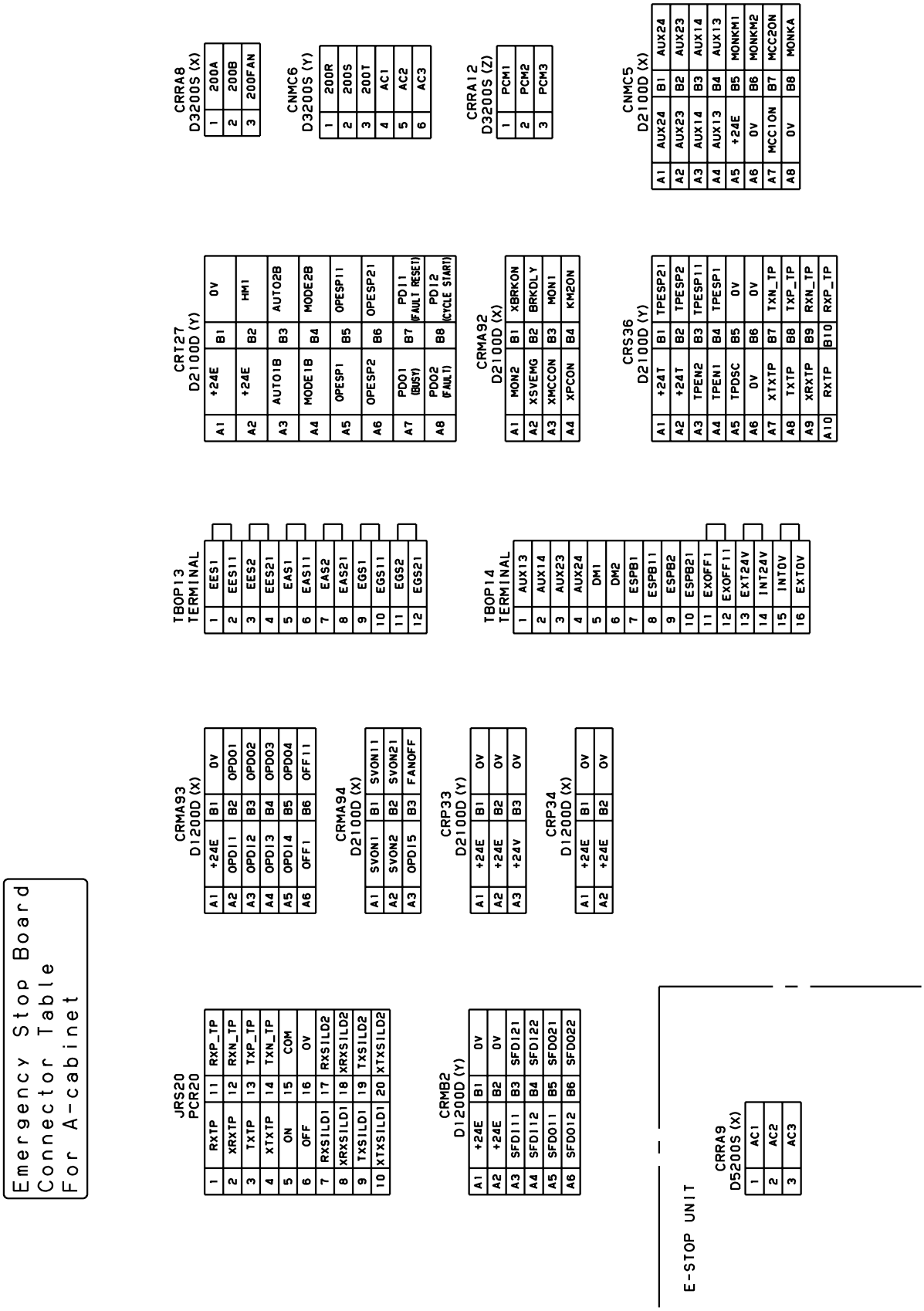

Fig.B (o) Emergency stop board connector table (A-cabinet)

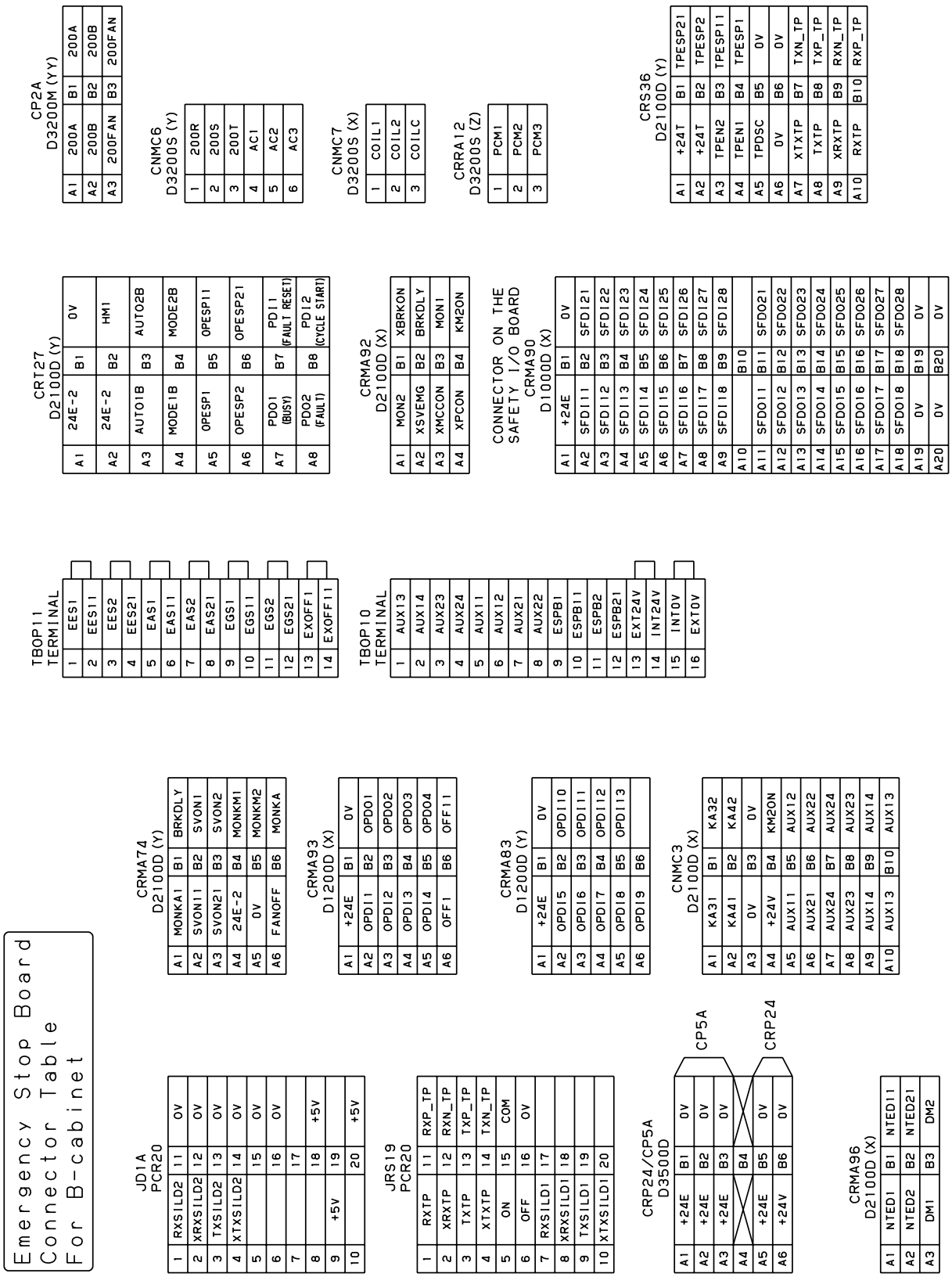

Fig.B (p) Emergency stop board connector table (B-cabinet)

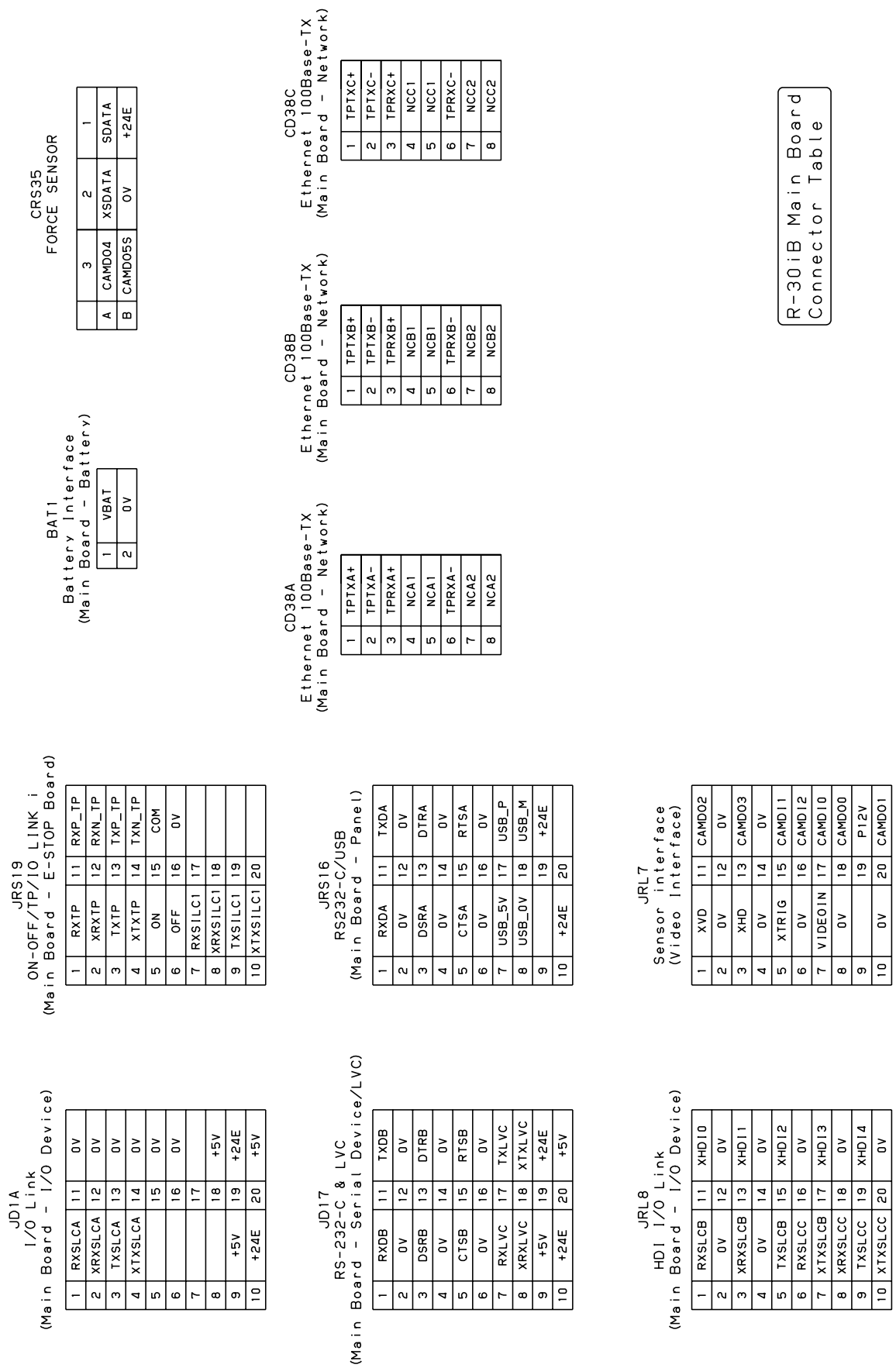

Fig.B (q) Main board connector table (R-30*i*B)

CRS35
FORCE SENSOR

	3	2	1
A	CAMDO4	XSDATA	SDATA
B	CAMDO5S	0V	+24E

CD38C
Ethernet
100Base-TX/1000Base-T
(Main Board - Network)

1	TDPA
2	TDMA
3	TDPB
4	TDPC
5	TDMC
6	TDMB
7	TDPD
8	TDMD
9	FG
10	FG

BAT1
Battery Interface
(Main Board - Battery)

1	VBAT
2	0V

CD38B
Ethernet 100Base-TX
(Main Board - Network)

1	TPTXB+
2	TPTXB-
3	TPRXB+
4	NCB1
5	NCB1
6	TPRXB-
7	NCB2
8	NCB2

CD38A
Ethernet 100Base-TX
(Main Board - Network)

1	TPTXA+
2	TPTXA-
3	TPRXA+
4	NCA1
5	NCA1
6	TPRXA-
7	NCA2
8	NCA2

R-30iB Plus Main Board
Connector Table

JRS19
ON-OFF/TP/IO LINK i
(Main Board - E-STOP Board)

1	RXTP	11	RXP_TP
2	XRXTP	12	RXN_TP
3	TXTP	13	TXP_TP
4	XTXTP	14	TXN_TP
5	ON	15	COM
6	OFF	16	0V
7	RXSILC1	17	
8	XRXSILC1	18	
9	TXSILC1	19	
10	XTXSILC1	20	

JRS16
RS232-C/USB
(Main Board - Panel)

1	RXDA	11	TXDA
2	0V	12	0V
3	DSRA	13	DTRA
4	0V	14	0V
5	CTSA	15	RTSA
6	0V	16	0V
7	USB_5V	17	USB_P
8	USB_0V	18	USB_M
9		19	+24E
10	+24E	20	

CRJ3
Sensor interface
(Video Interface)

1	CAMERA
SHIELD	0V

JD1A
I/O Link
(Main Board - I/O Device)

1	RXSLCA	11	0V
2	XRXSLCA	12	0V
3	TXSLCA	13	0V
4	XTXSLCA	14	0V
5		15	0V
6		16	0V
7		17	
8		18	+5V
9	+5V	19	+24E
10	+24E	20	+5V

JD17
RS-232-C & LVC
(Main Board - Serial Device/LVC)

1	RXDB	11	TXDB
2	0V	12	0V
3	DSRB	13	DTRB
4	0V	14	0V
5	CTSB	15	RTSB
6	0V	16	0V
7	RXLVC	17	TXLVC
8	XRXLVC	18	XTXLVC
9	+5V	19	+24E
10	+24E	20	+5V

JRL8
HDI I/O Link
(Main Board - I/O Device)

1	RXSLCB	11	XHDI0
2	0V	12	0V
3	XRXSLCB	13	XHDI1
4	0V	14	0V
5	TXSLCB	15	XHDI2
6	RXSLCC	16	0V
7	XTXSLCB	17	XHDI3
8	XRXSLCC	18	0V
9	TXSLCC	19	XHDI4
10	XTXSLCC	20	0V

Fig.B (r) Main board connector table (R-30*i*B Plus)

Emergency Stop Board diagram

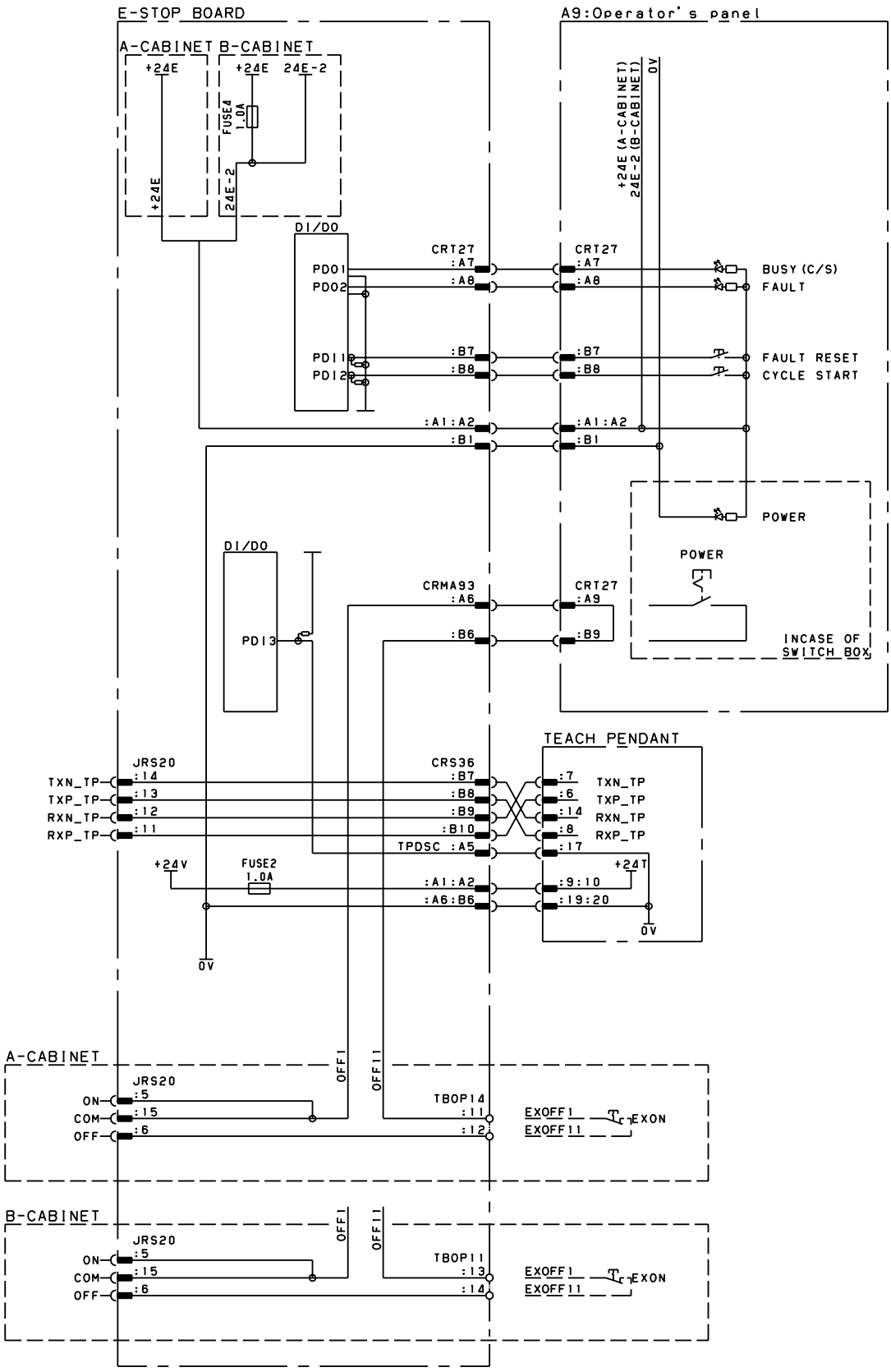

Fig.B (s) Operator's panel connection diagram

Teach pendant Connector Table

CONNECTOR ON THE TEACH PENDANT

10	+24T	9	+24T	8	RXP_TP	7	TXN_TP	6	TXP_TP	5	DRAIN								
16	TPESP21	15	TPESP2	14	RXN_TP	13	TPESP11	12	TPESP1	11	TPEN1								
		20	0V	19	0V	18	TPEN2	17	TPDSC										

Operator's panel Connector Table (B-CABINET)

CRT27 D2100D(X)

A1	24E-2	B1	0V
A2	24E-2	B2	HM1
A3	AUTO1B	B3	AUTO2B
A4	MODE1B	B4	MODE2B
A5	OPESP1	B5	OPESP11
A6	OPESP2	B6	OPESP21
A7	PDO1 (BUSY)	B7	PDI1 (FAULT RESET)
A8	PDO2 (FAULT)	B8	PDI2 (CYCLE START)
A9	OFF1	B9	OFF11
A10		B10	

CRT28 D2100D(X)

A1	24E-2	B1	0V
A2	AUTO1B	B2	AUTO2B
A3	MODE1B	B3	MODE2B

CRP5 D2100S(X)

1	24E-2
2	0V
3	HM1

Operator's panel Connector Table (A-CABINET)

CRT27 D2100D(X)

A1	+24E	B1	0V
A2	+24E	B2	HM1
A3	AUTO1B	B3	AUTO2B
A4	MODE1B	B4	MODE2B
A5	OPESP1	B5	OPESP11
A6	OPESP2	B6	OPESP21
A7	PDO1 (BUSY)	B7	PDI1 (FAULT RESET)
A8	PDO2 (FAULT)	B8	PDI2 (CYCLE START)
A9	OFF1	B9	OFF11
A10		B10	

CRT28 D2100D(X)

A1	+24E	B1	0V
A2	AUTO1B	B2	AUTO2B
A3	MODE1B	B3	MODE2B

CRP5 D2100S(X)

1	+24E
2	0V
3	HM1

Fig.B (t) Operator's panel/Teach pendant connector table

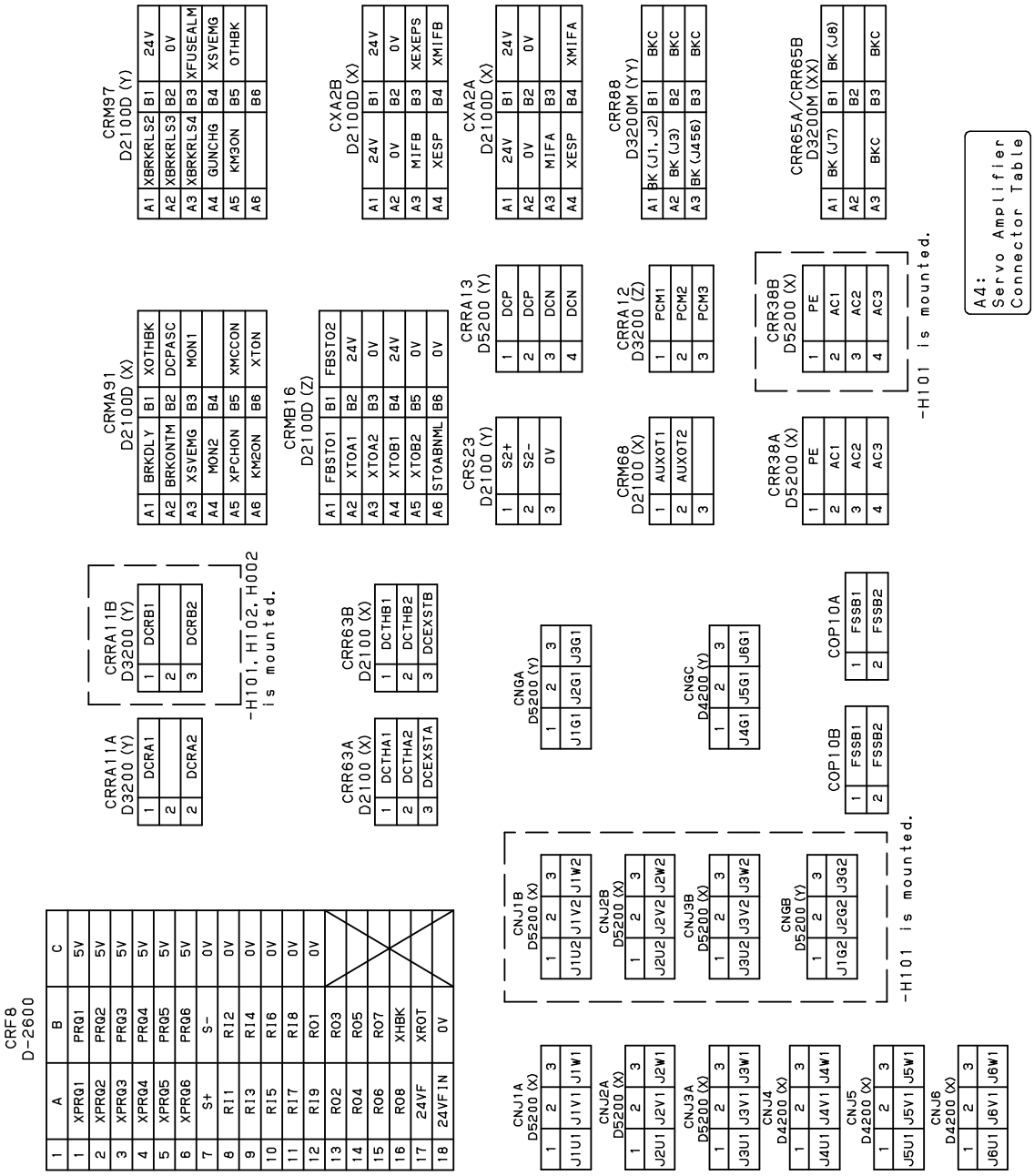

Fig.B (u) Servo amplifier connector table

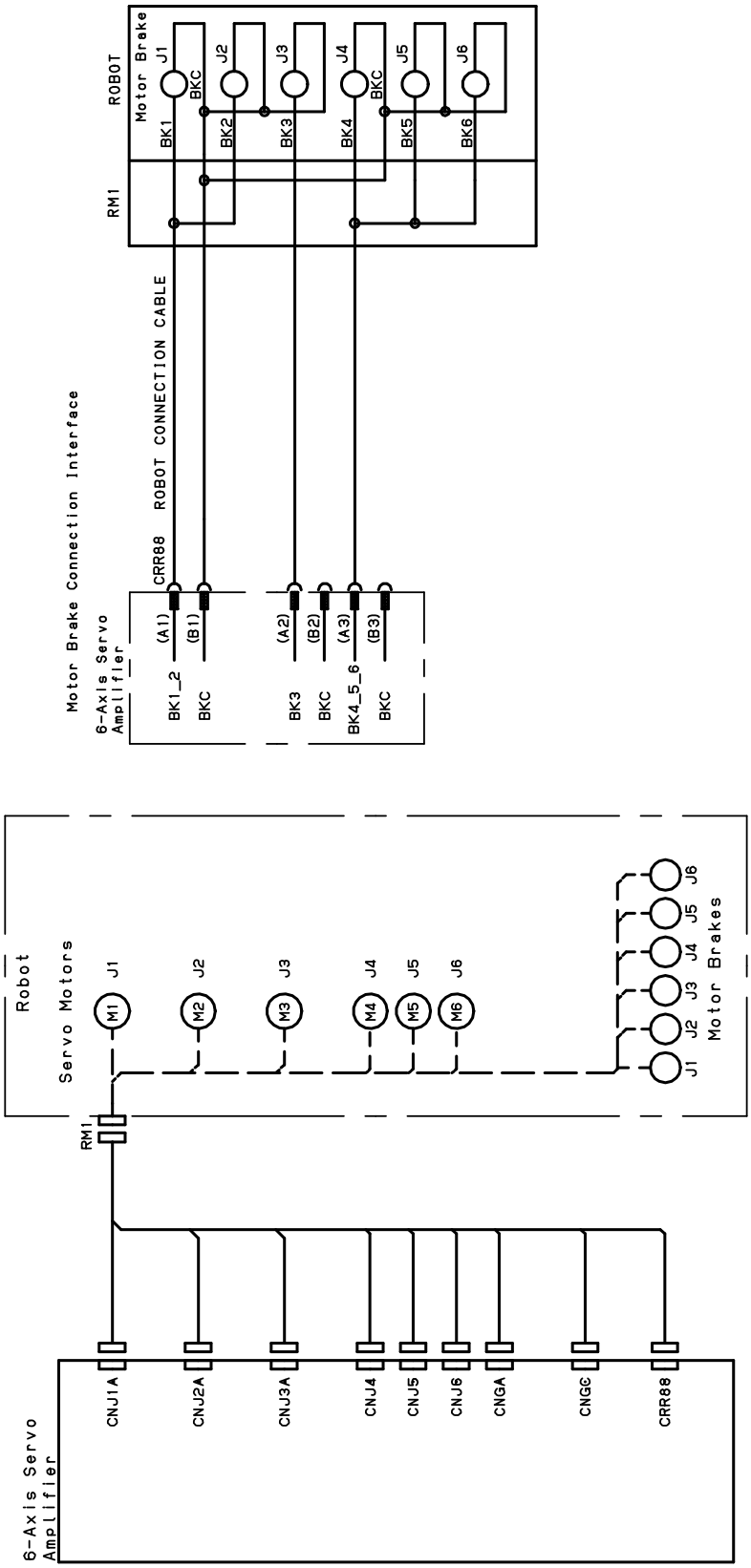

Fig.B (v) Motor power connection (Group1, Group11)
Group1: R-2000*i*B(except /200T/220U/220US), R-2000*i*C(except /190U/210L/210WE/220U/270F/270R), R-1000*i*A(except /120F-7B/130F), R-2000*i*D/100FH/165FH/210FH, M-710*i*C, M-420*i*A, M-421*i*A
Group11: M-2*i*A, M-3*i*A

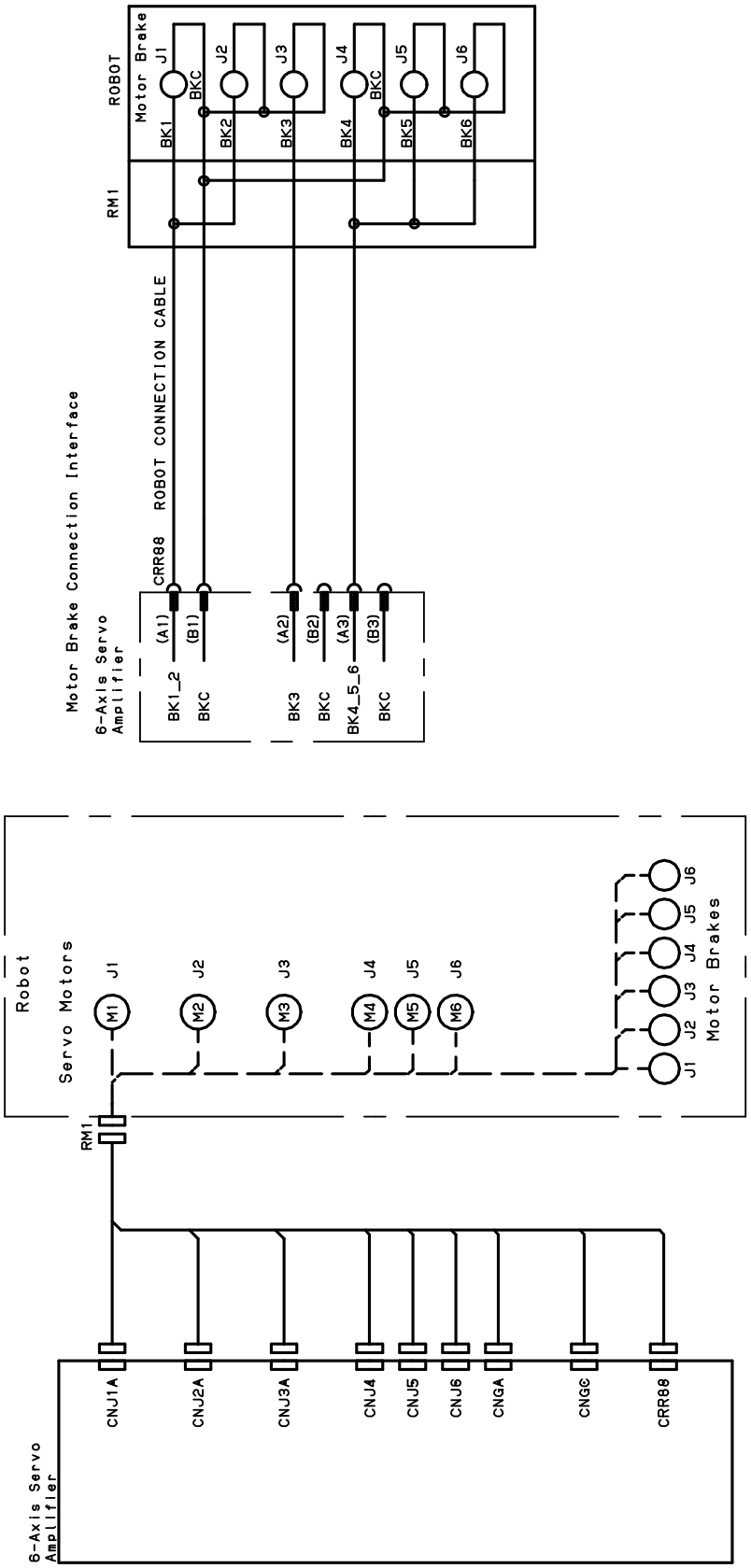

Fig.B (w) Motor power connection (Group2)
F-200*i*B

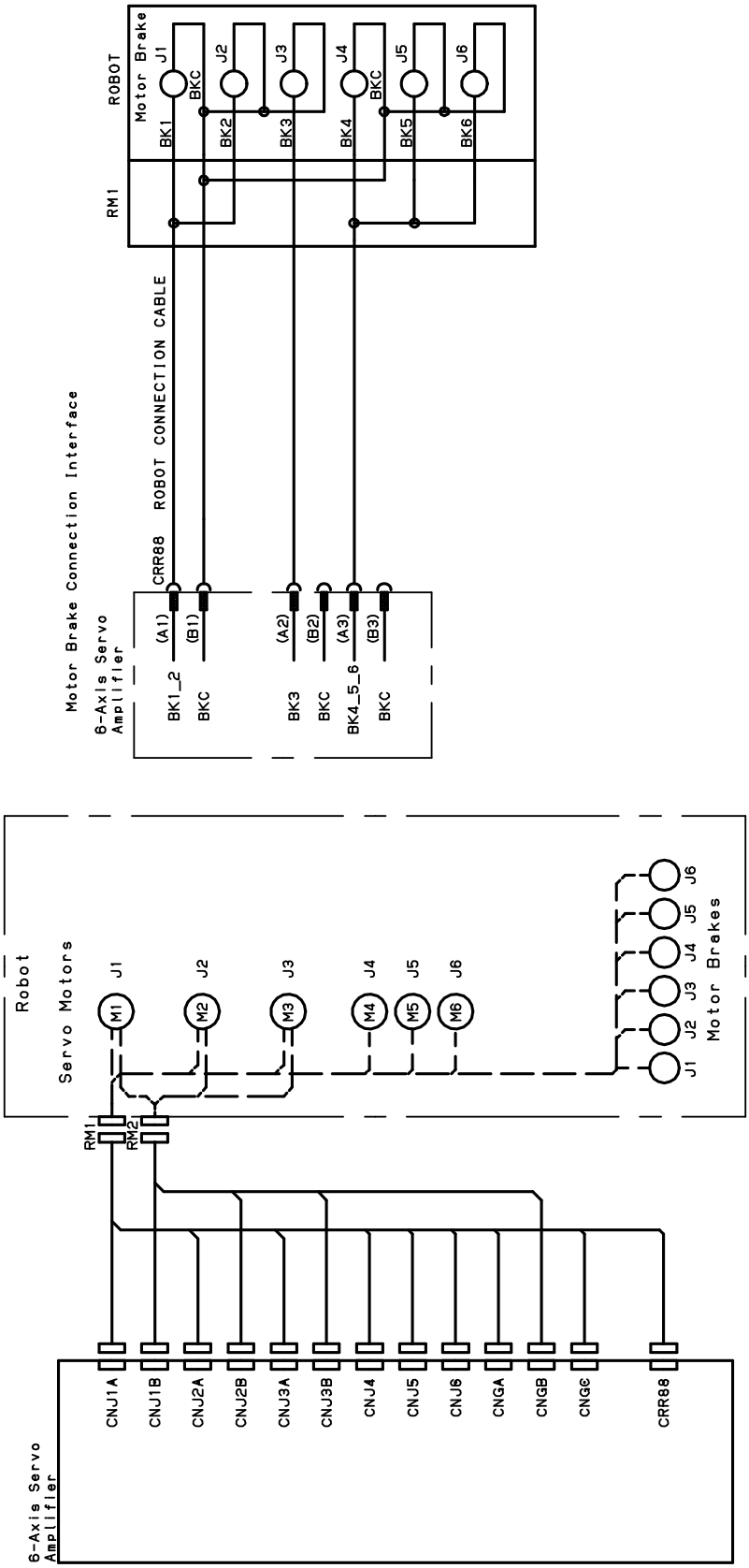

Fig.B (x) Motor power connection (Group3)
R-2000*i*B/200T/220U/220US, R-2000*i*C/190U/210L/210WE/220U/270F/270R, M-410*i*B, M-410*i*C

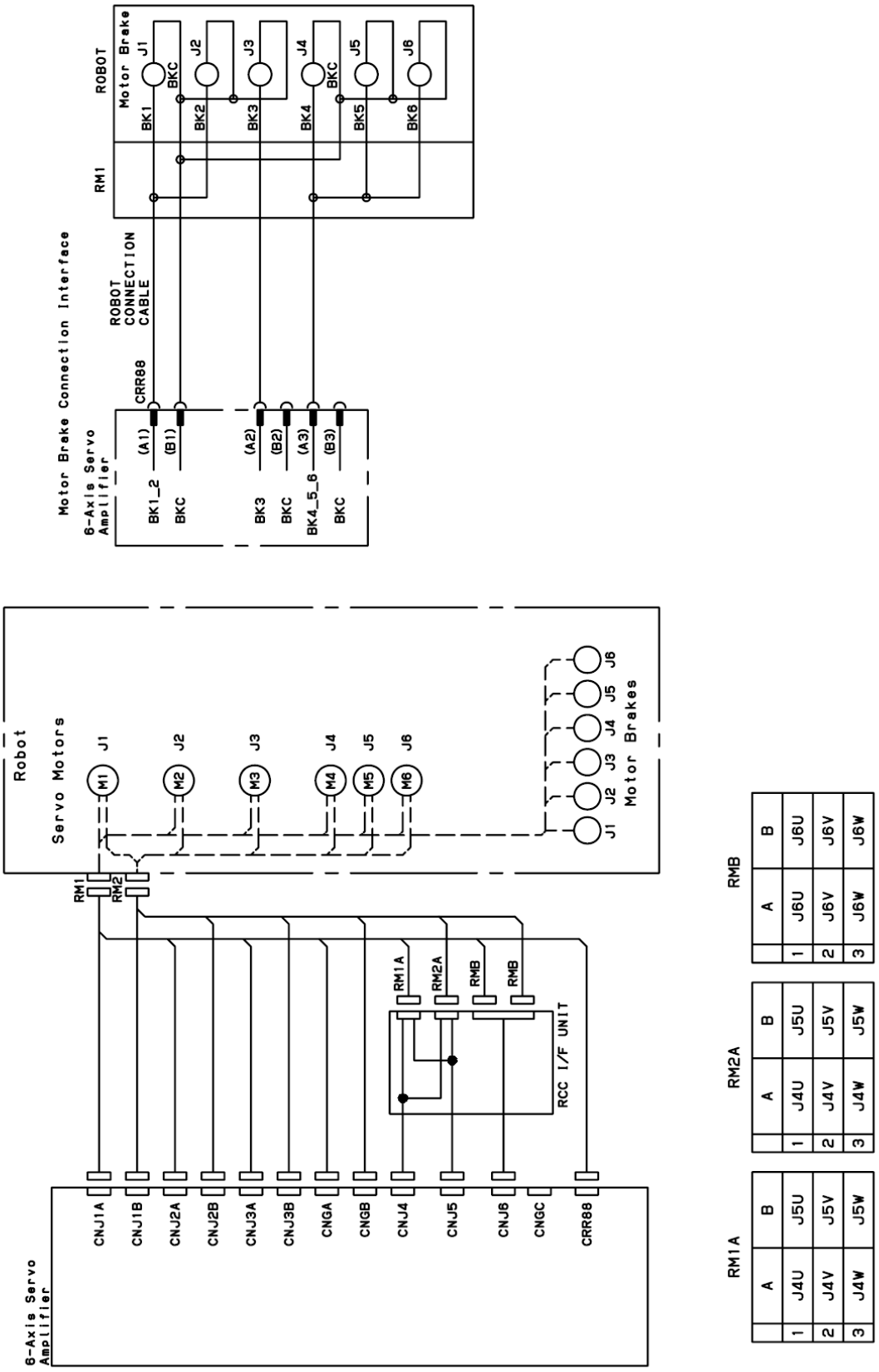

Fig.B (y) Motor power connection (Group4)
M-900*i*A/150P, 260L, 350, M-900*i*B/280, 280L, 330L, 360

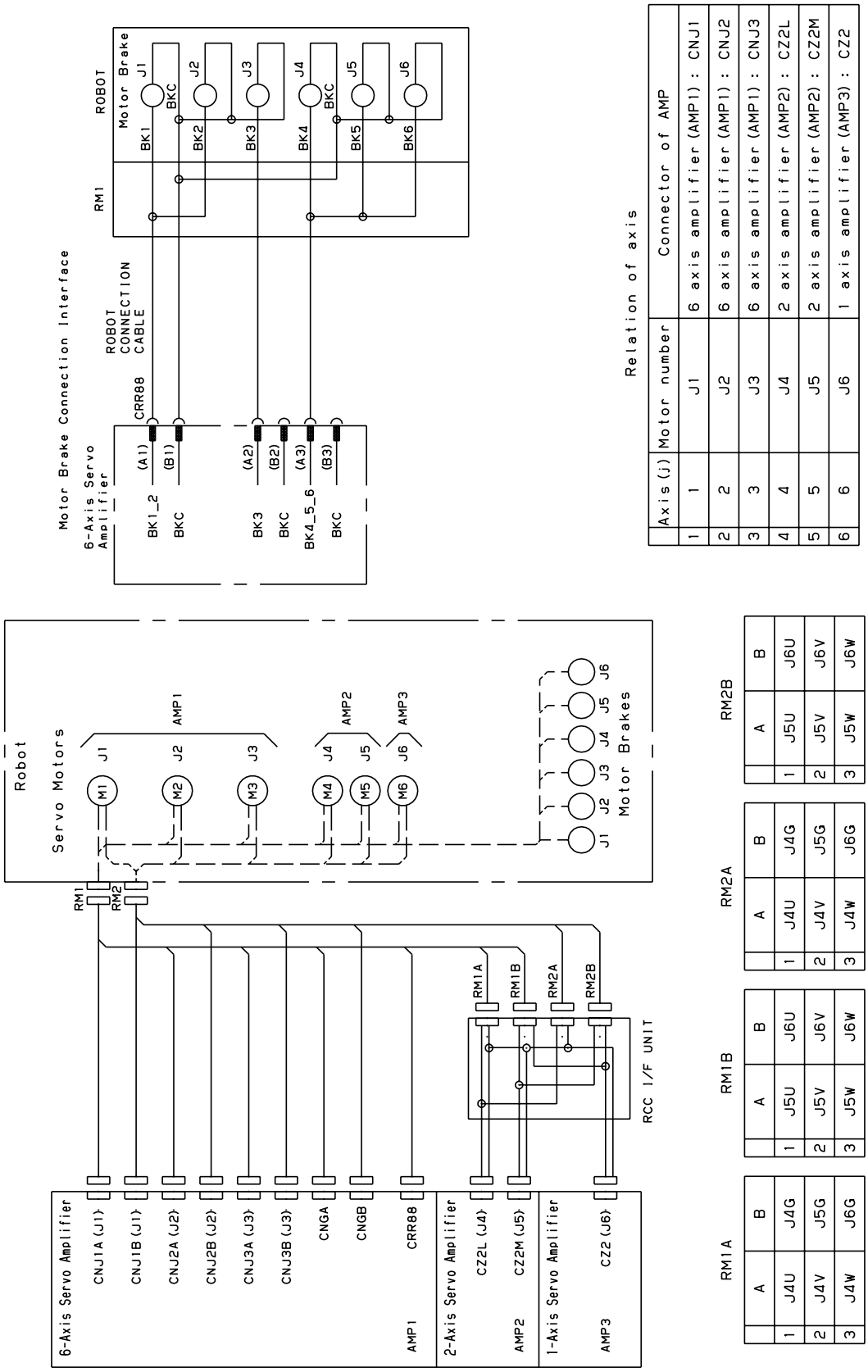

Fig.B (z) Motor power connection (Group5)
M-900*i*A/400L, 600, M-900*i*B/400L,700

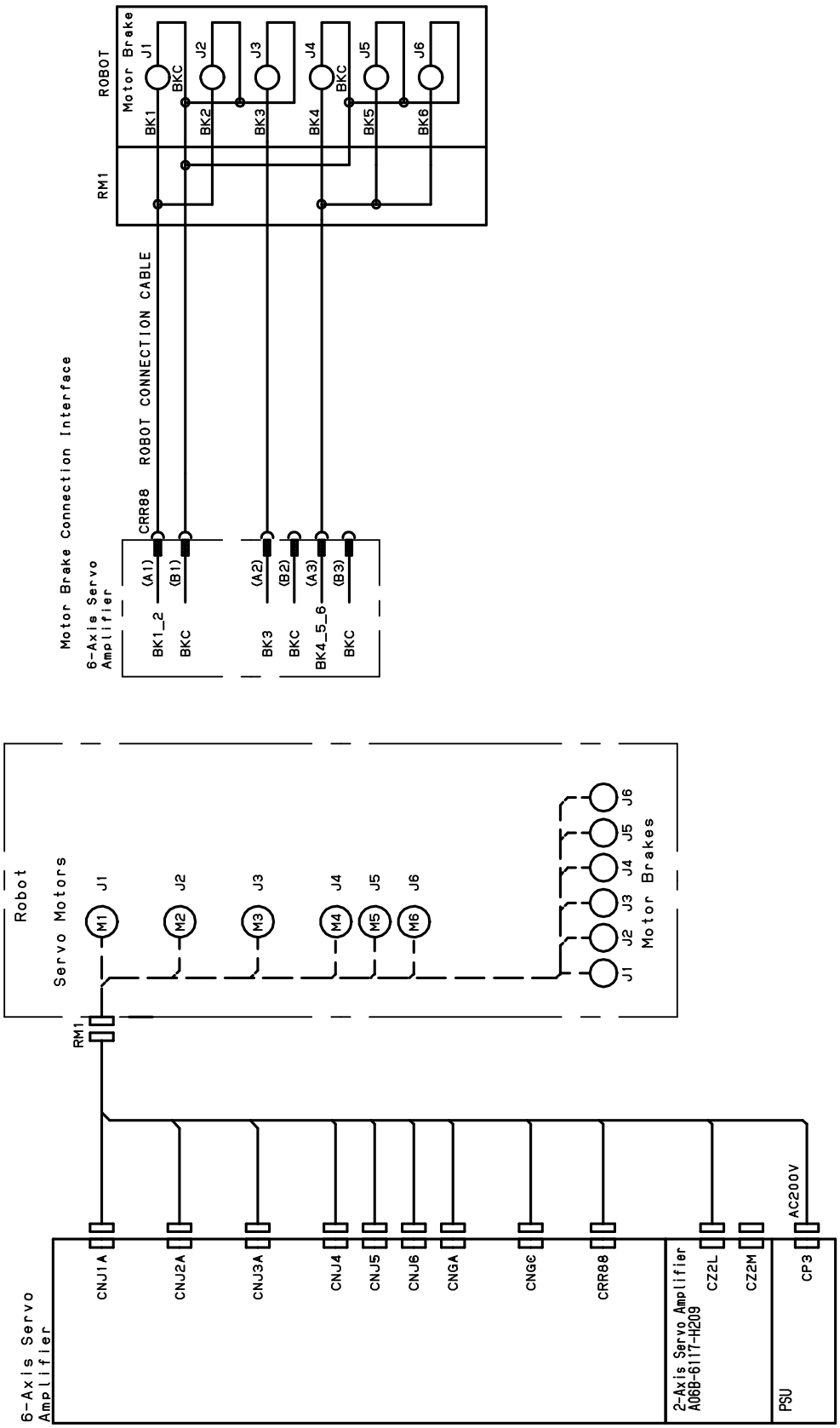

Fig.B (aa) Motor Power Connection (Group6-1)
M-430*i*A/4FH

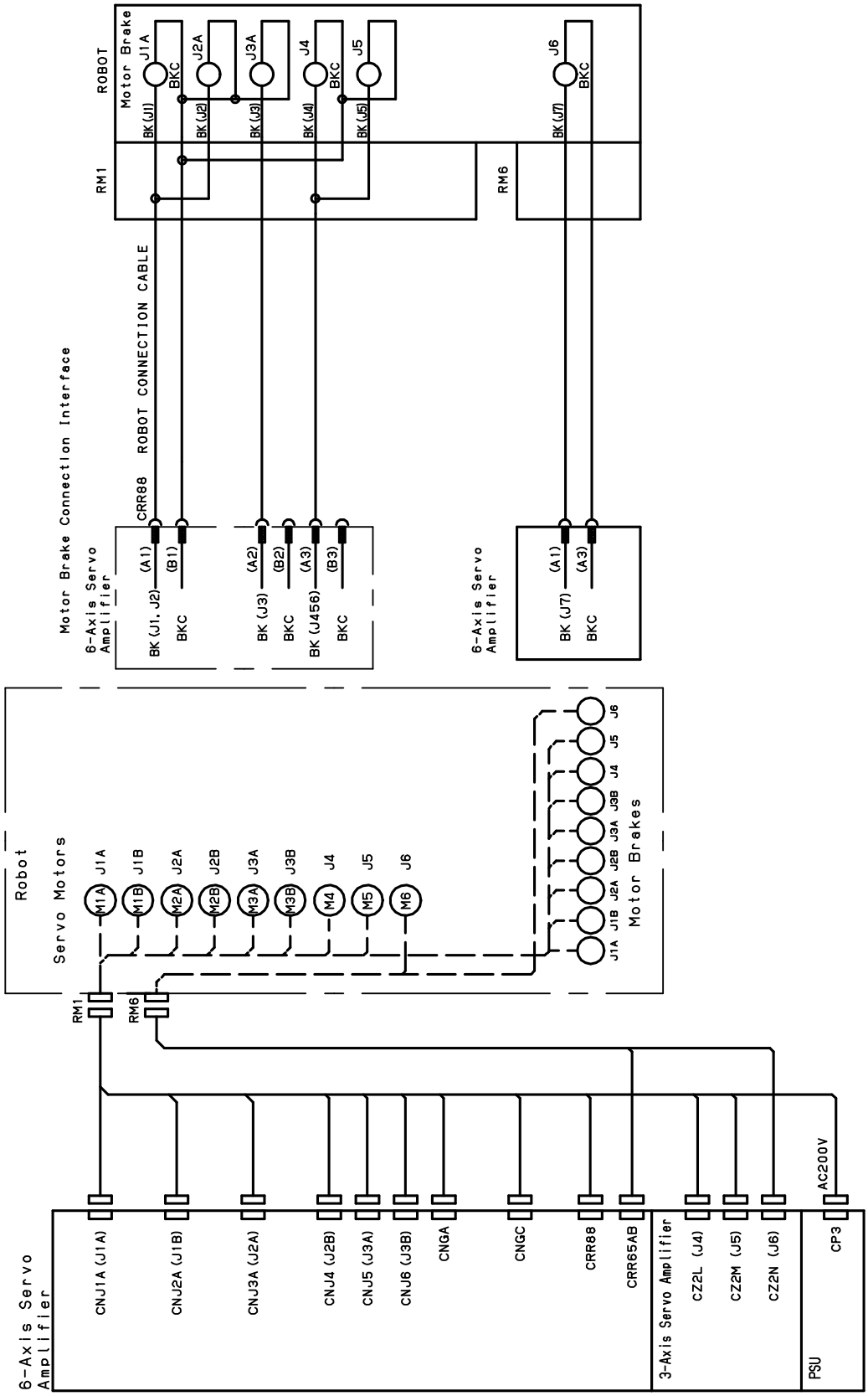

Fig.B (ab) Motor Power Connection (Group6-2)
M-430*i*A/2PH

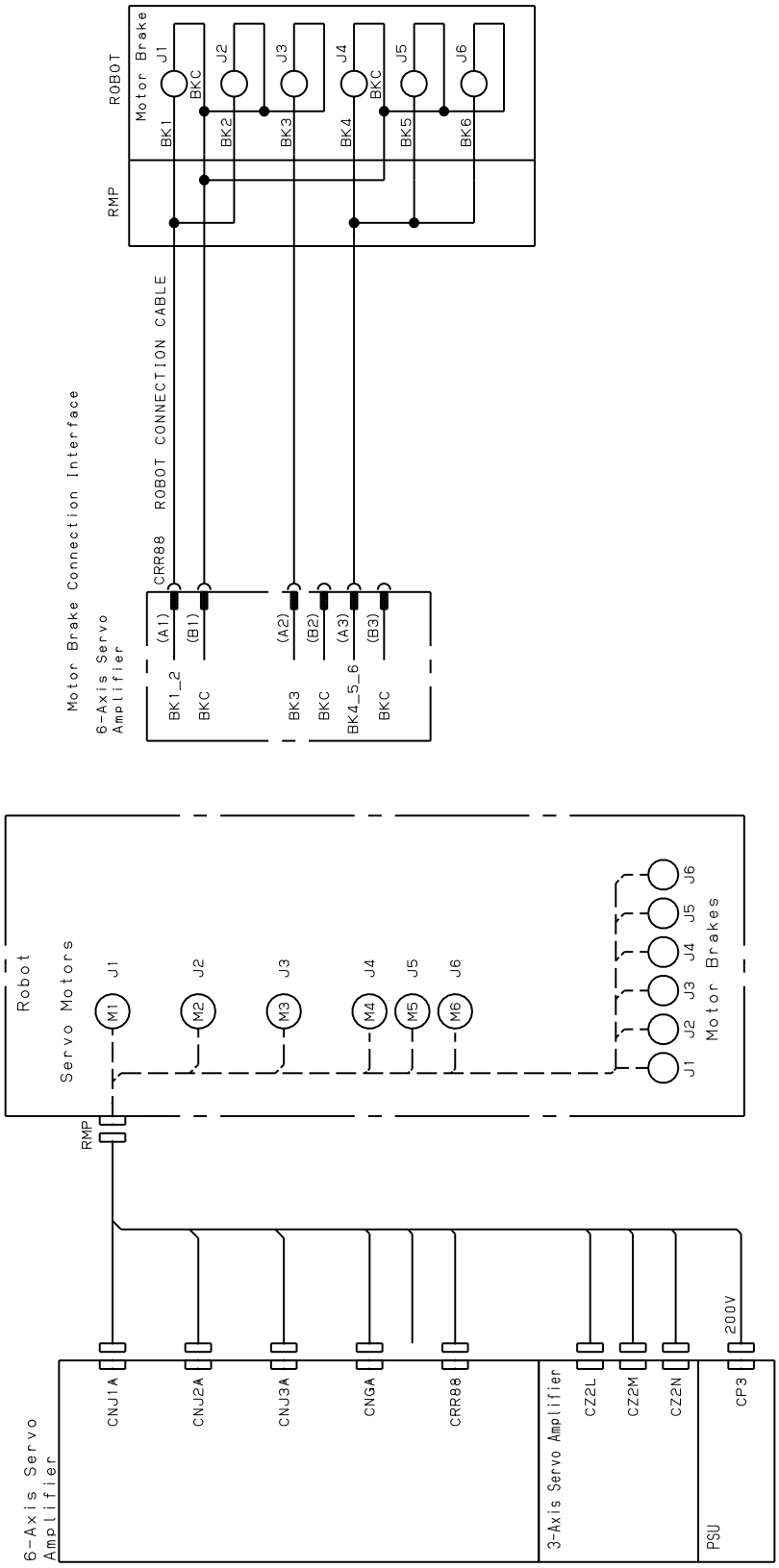

Fig.B (ac) Motor Power Connection (Group 7)
M-430*i*A/2P

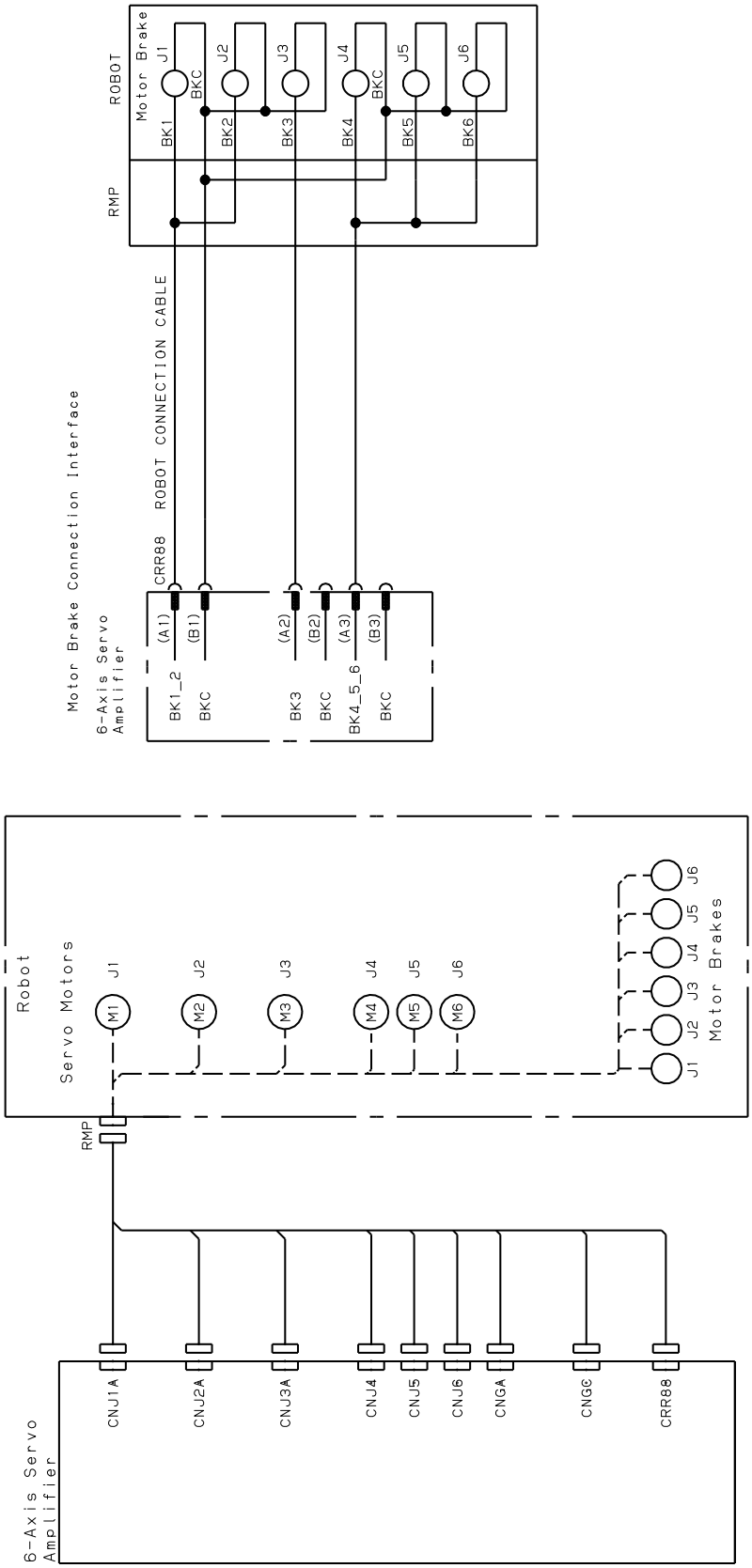

Fig.B (ad) Motor Power Connection (Group 8-1)
ARC Mate 100*i*C, ARC Mate 120*i*C, ARC Mate 100*i*D, ARC Mate 120*i*D, M-10*i*A, M-20*i*A, M-20*i*B, M-10*i*D, M-20*i*D, CR-15*i*A, CR-35*i*A

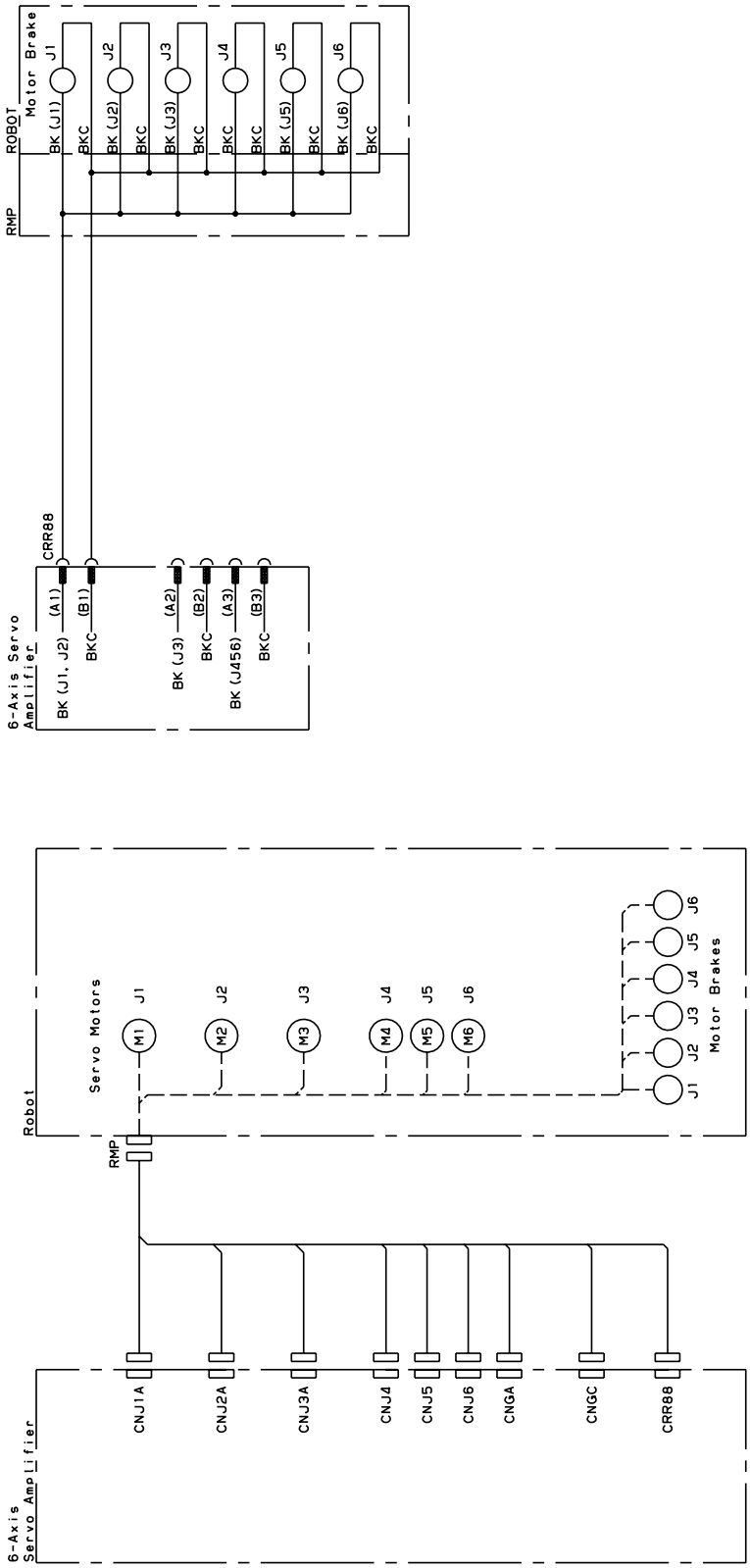

Fig.B (ae) Motor Power Connection (Group 8-2)
CR-4*i*A, CR-7*i*A, CR-14*i*A, LR Mate 200*i*D

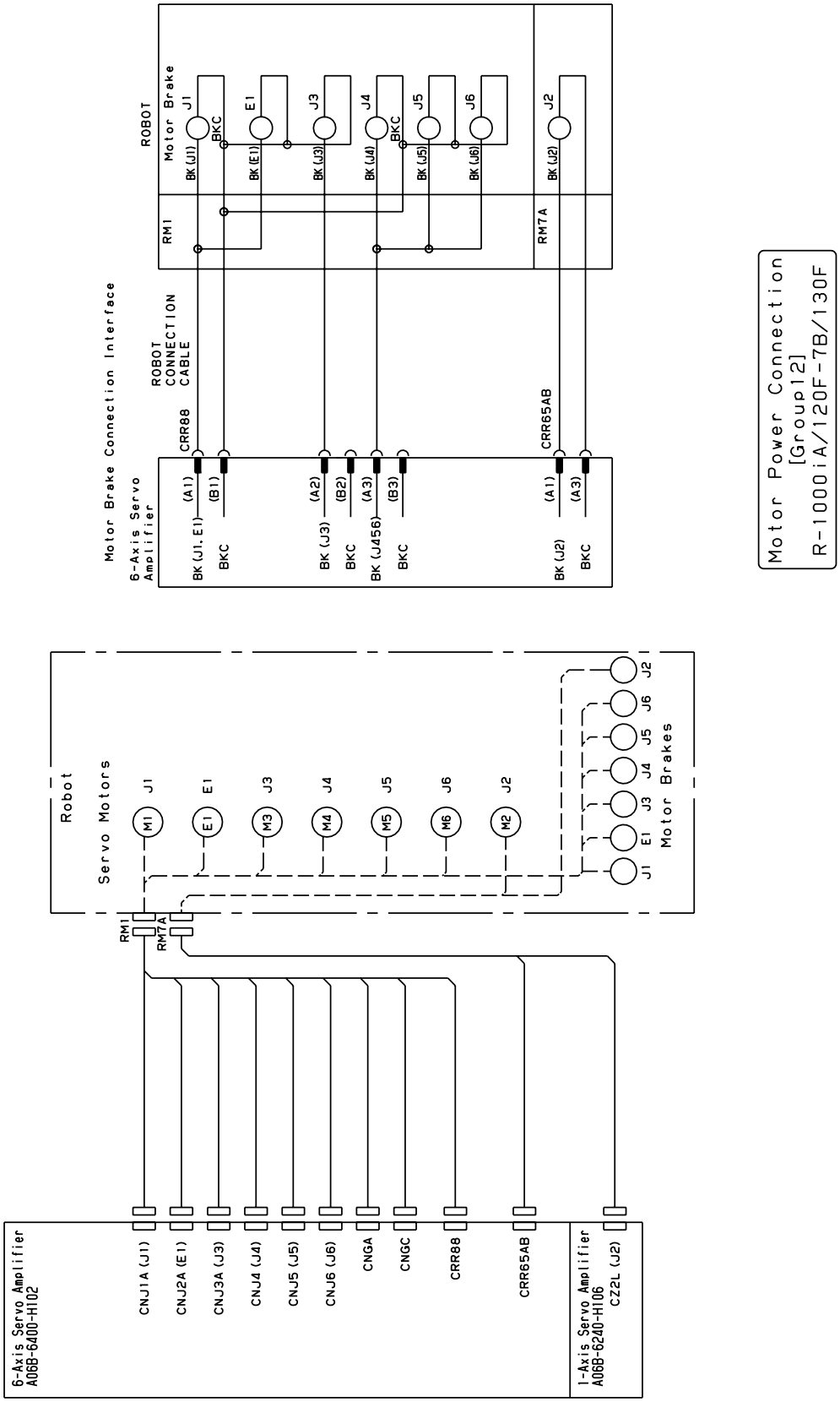

Fig.B (af) Motor Power Connection (Group 12)
R-1000*i*A/120F-7B/130F

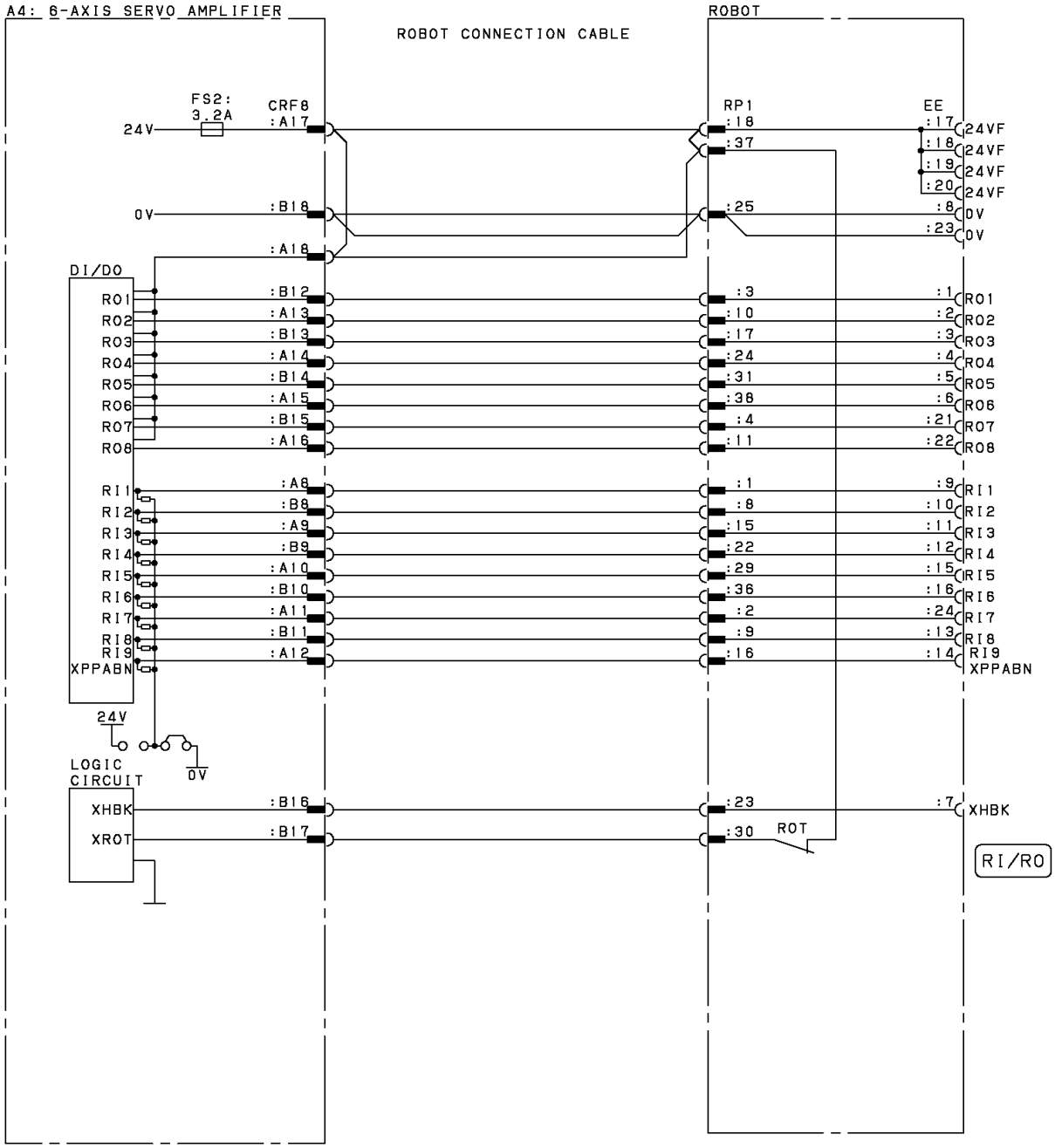

Fig.B (ag) RI/RO connection diagram (Group1 to 5 and 12)

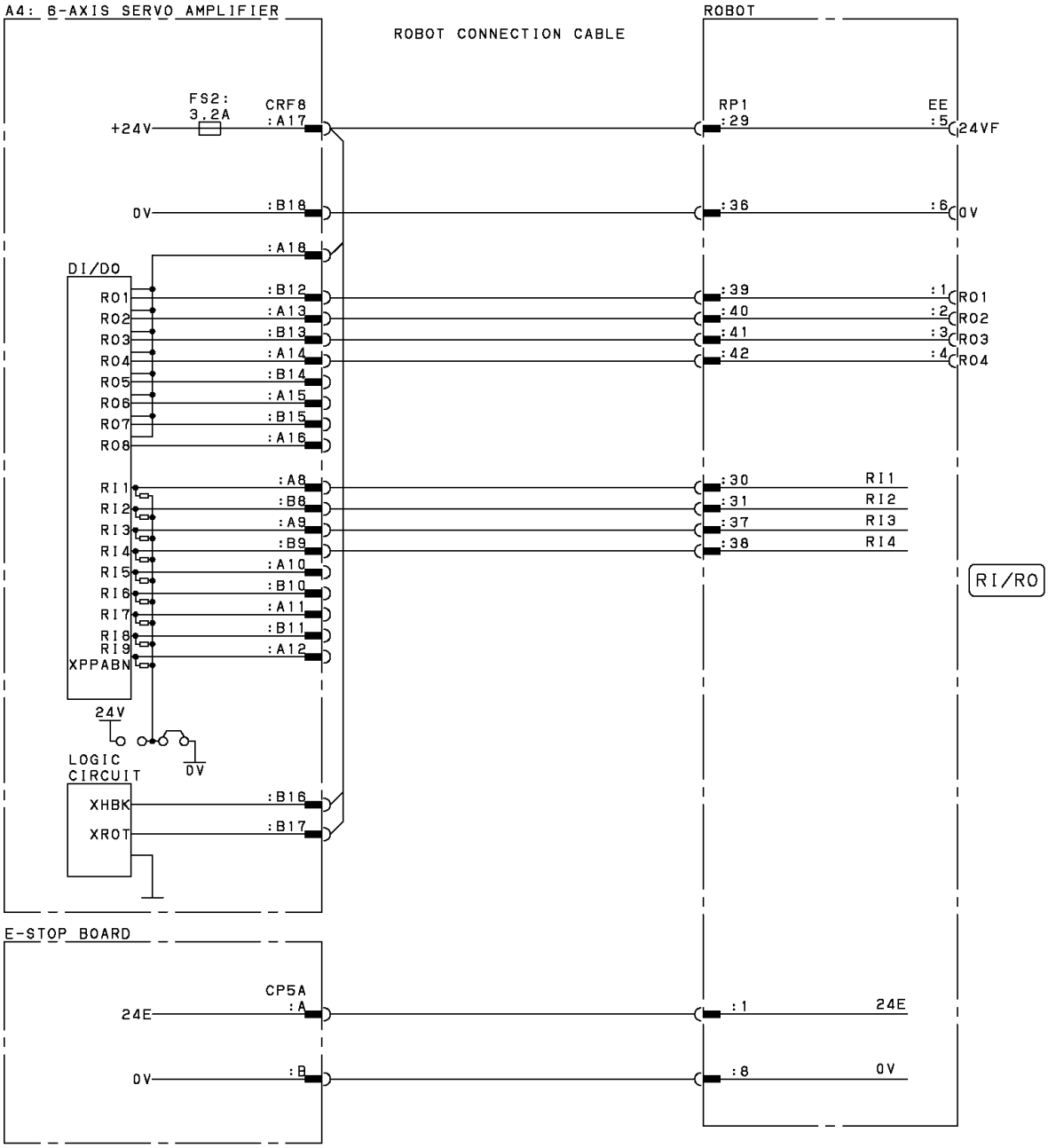

Fig.B (ah) RI/RO Connection Diagram (Group6; M-430*i*A/2PH,4FH)

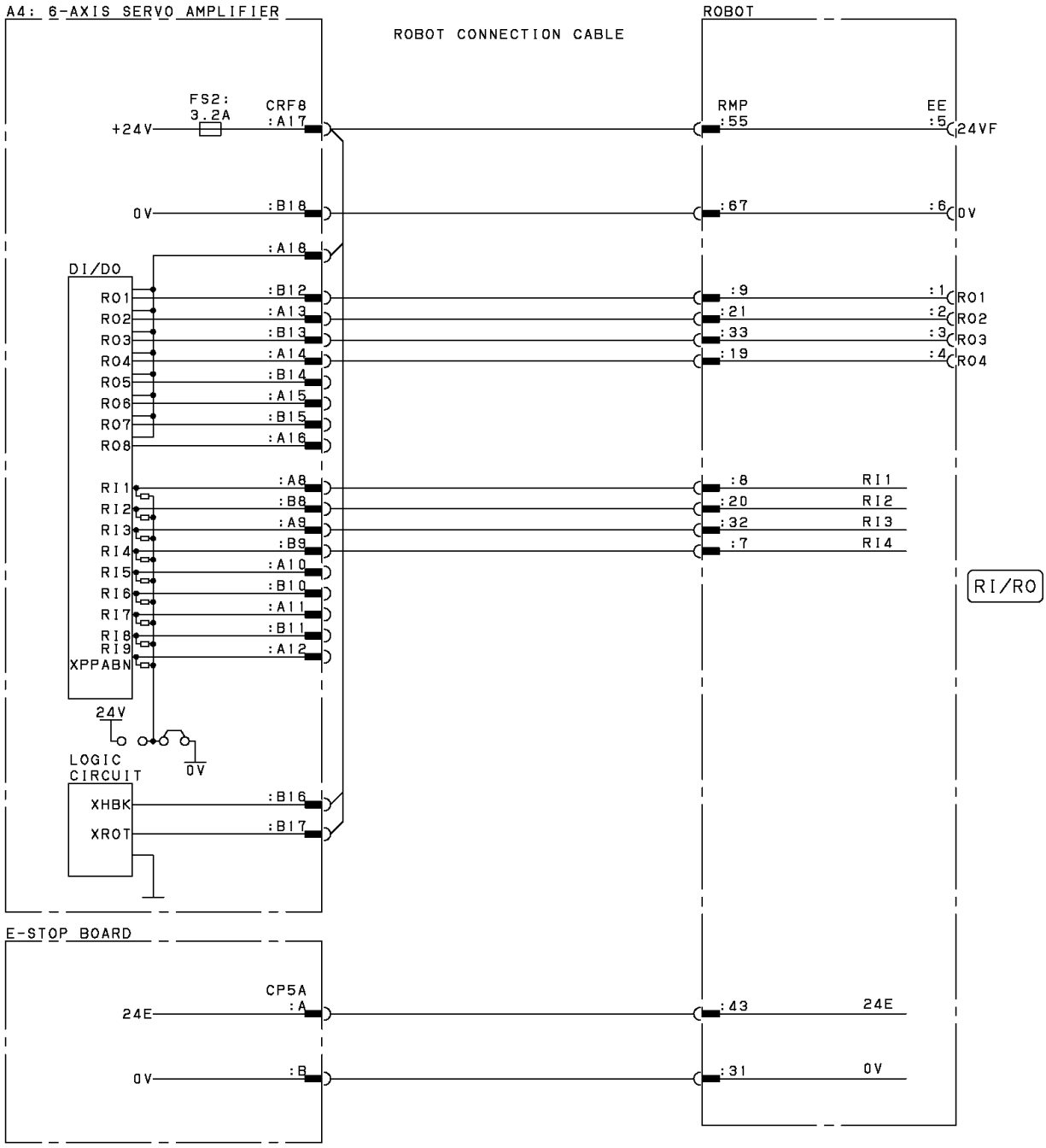

Fig.B (ai) RI/RO Connection Diagram (Group7; M-430*i*A/2P)

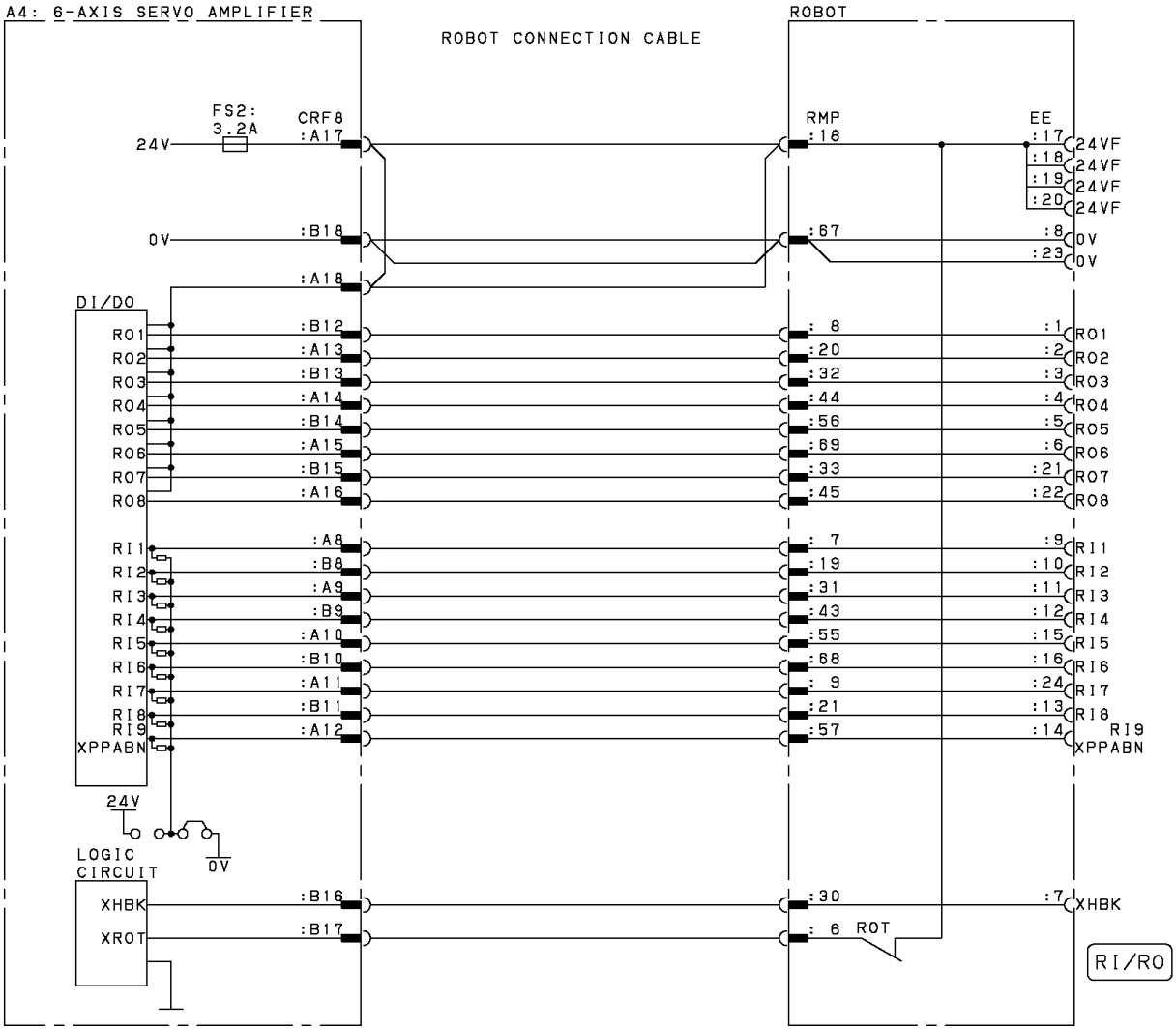

Fig.B (aj) RI/RO Connection Diagram (Group8; ARC Mate 100*i*C, ARC Mate 120*i*C, ARC Mate 100*i*D, ARC Mate 120*i*D, M-10*i*A, M-20*i*A, M-20*i*B, M-10*i*D, M-20*i*D, CR-4*i*A, CR-7*i*A, CR-14*i*A, CR-15*i*A, CR-35*i*A, LR Mate 200*i*D)

There are many type EE connector of mechanical unit.
The detail is shown on the mechanical unit manual.

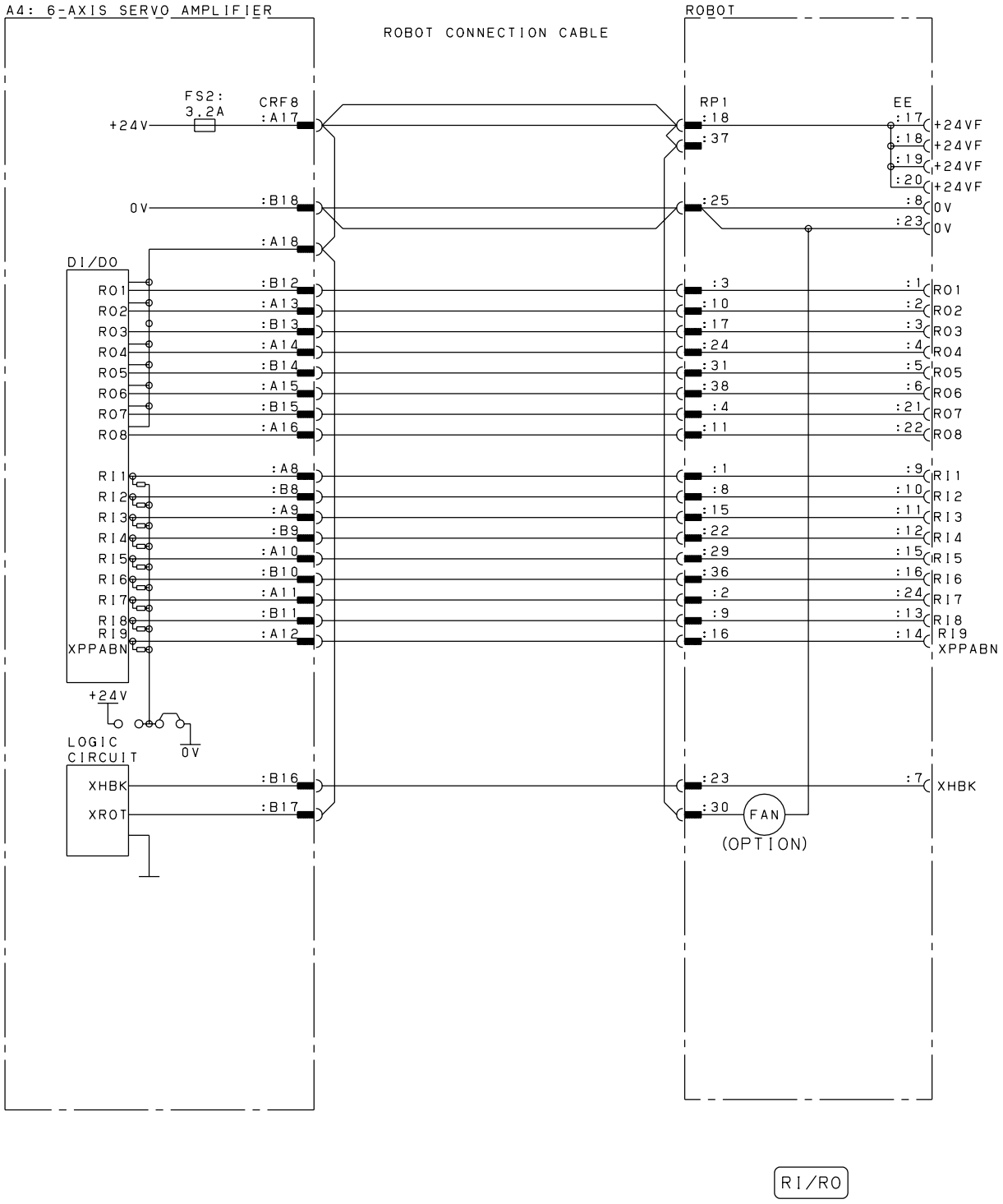

Fig.B (ak) RI/RO Connection Diagram (Group11; M-2*i*A, M-3*i*A)

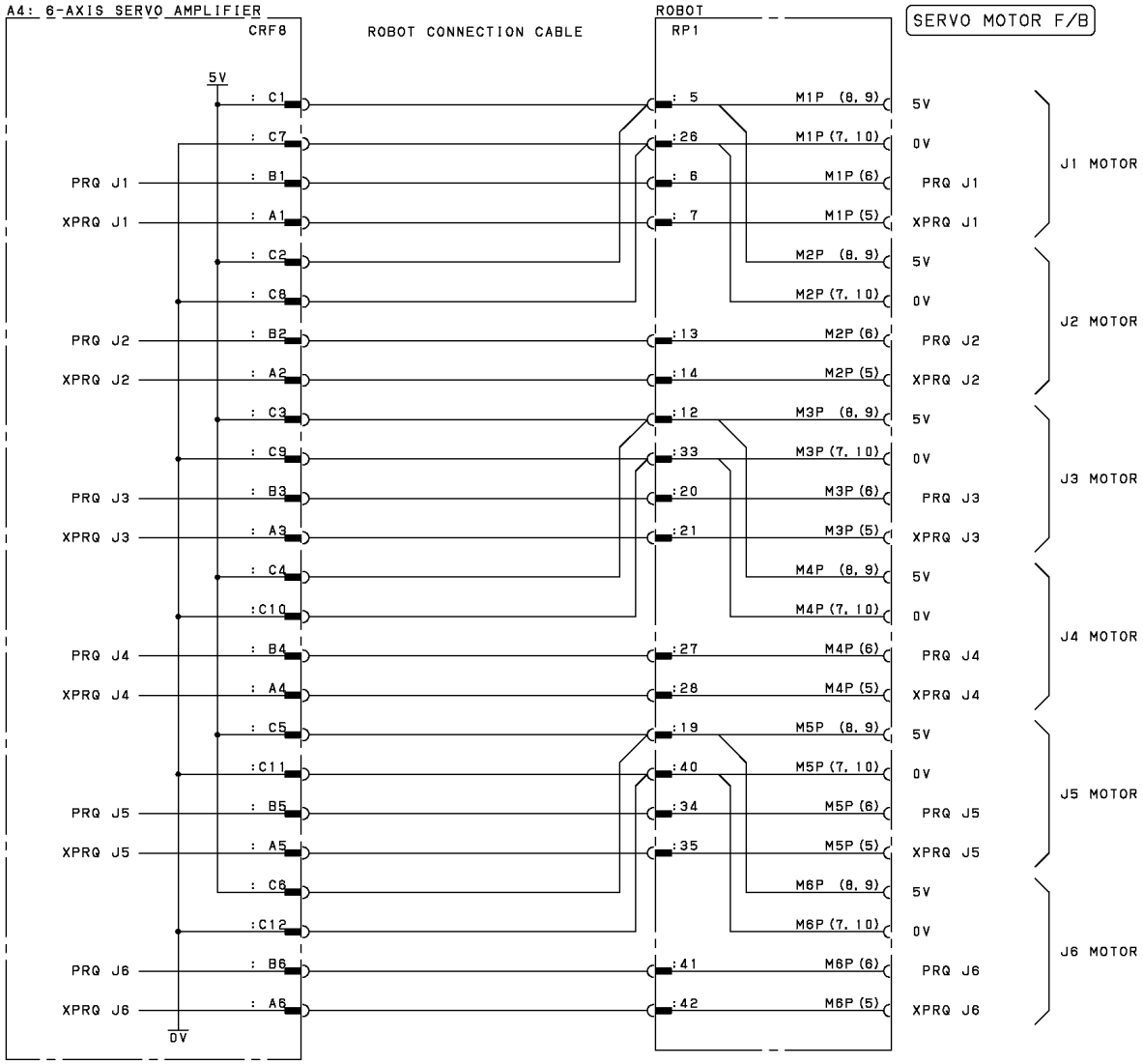

Fig.B (al) Pulsecoder signal connection diagram (Group1 to 4, 11)

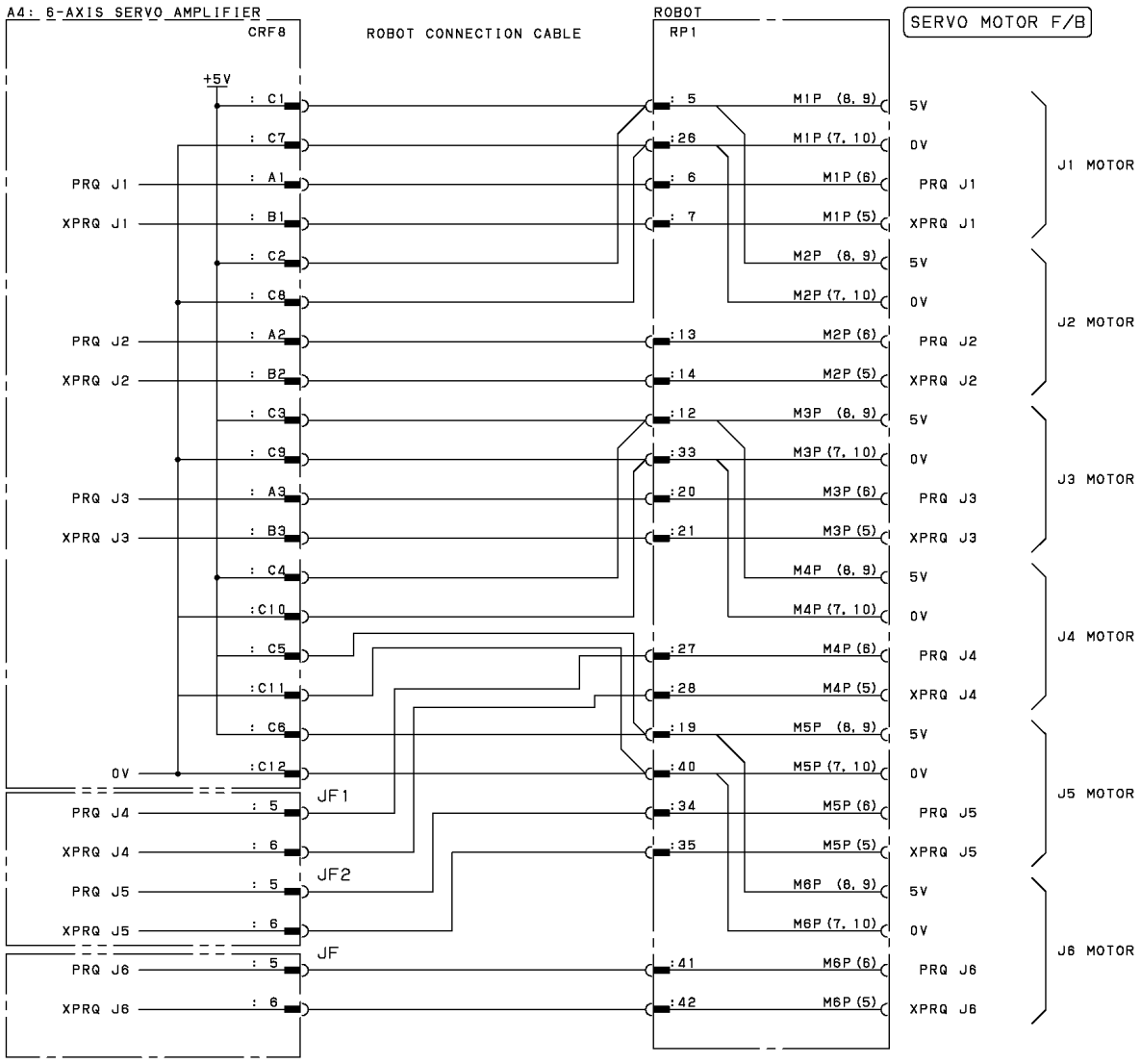

Fig.B (am) Pulsecoder Signal Connection Diagram (Group5; M-900*i*A/400L, 600, M-900*i*B/400L,700)

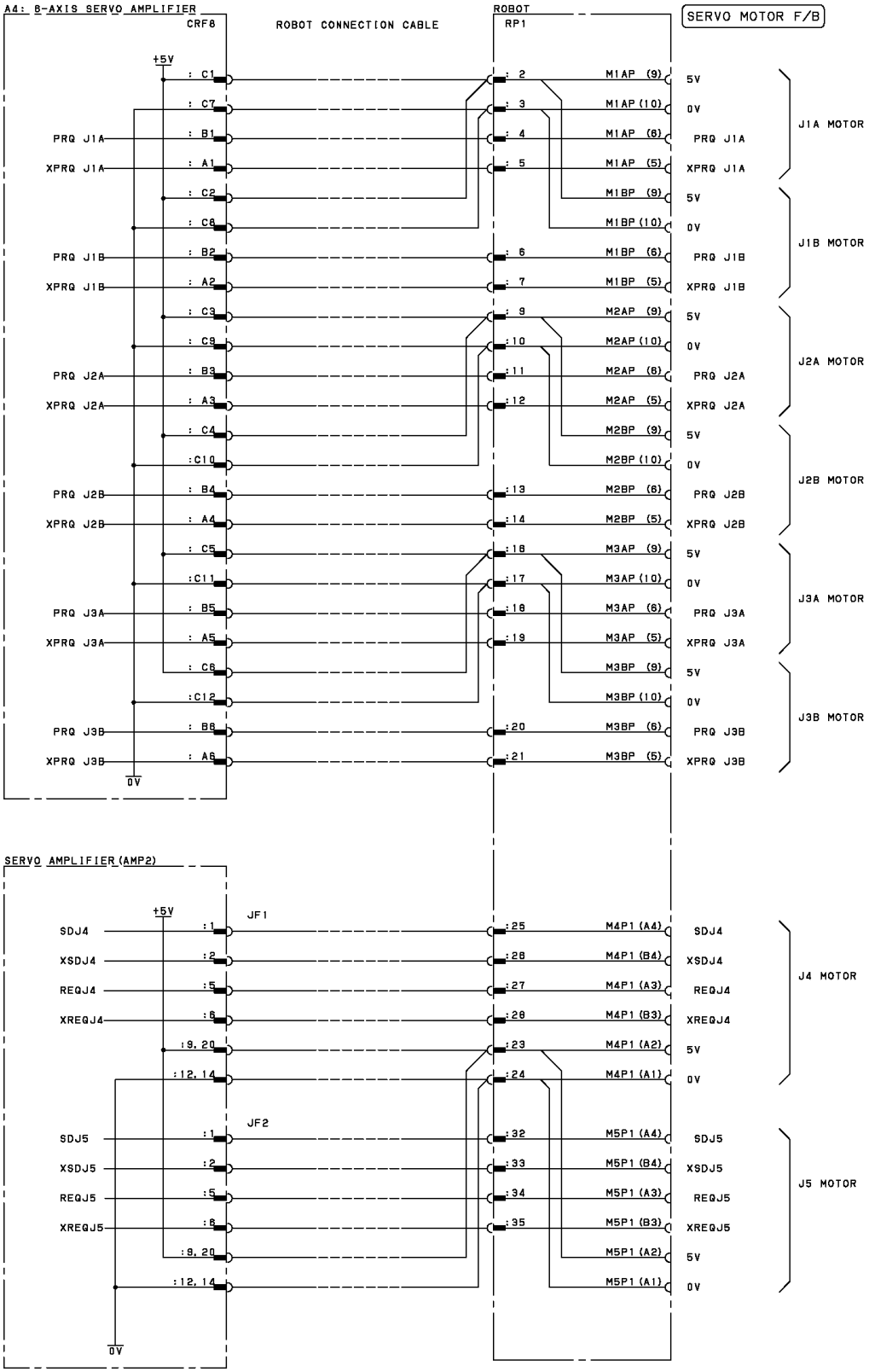

Fig.B (an) Pulsecoder Signal Connection Diagram (group6; excluding M-430*i*A/2PH)

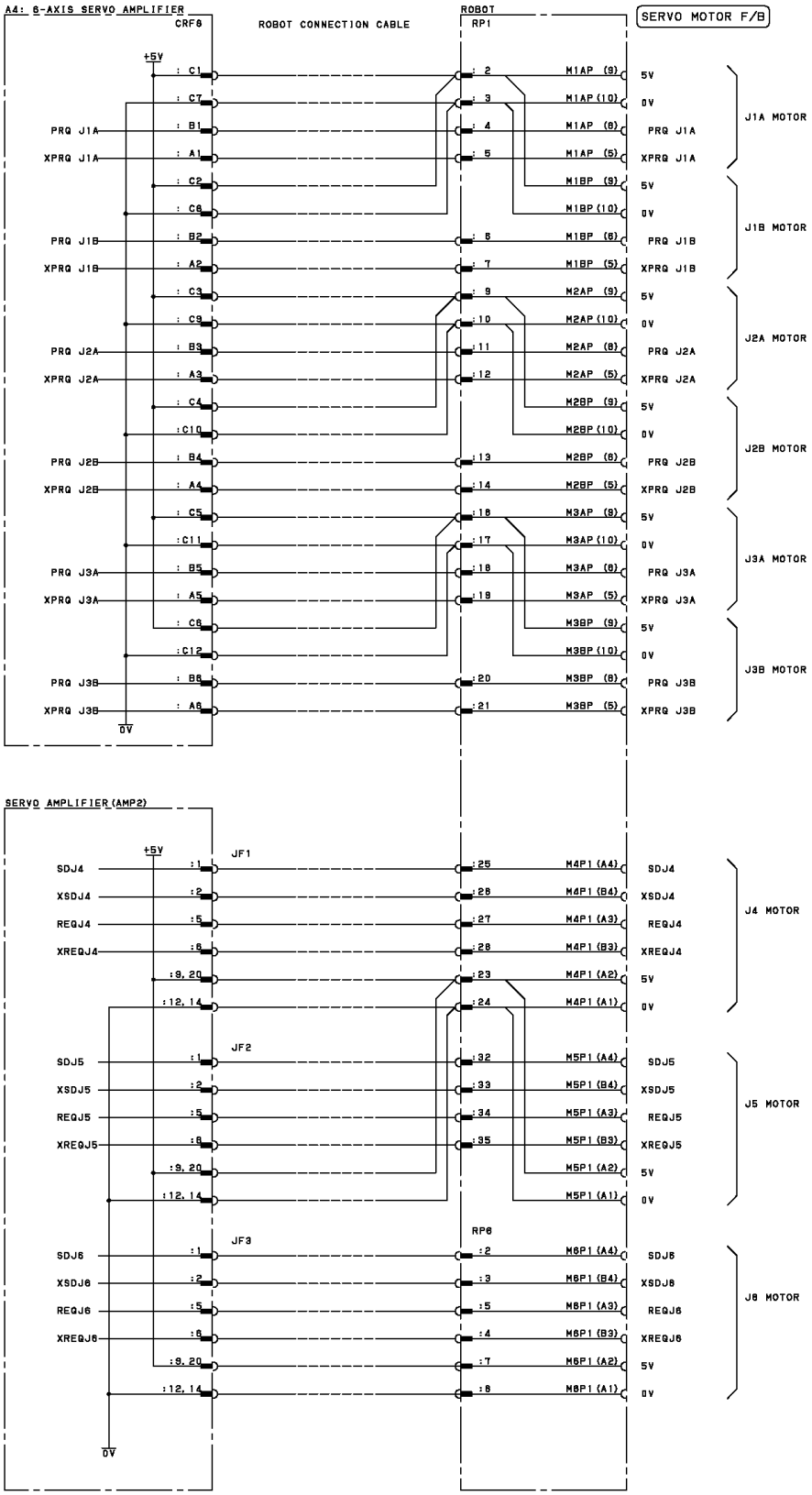

Fig.B (ao) Pulsecoder Signal Connection Diagram (group6; M-430*i*A/2PH)

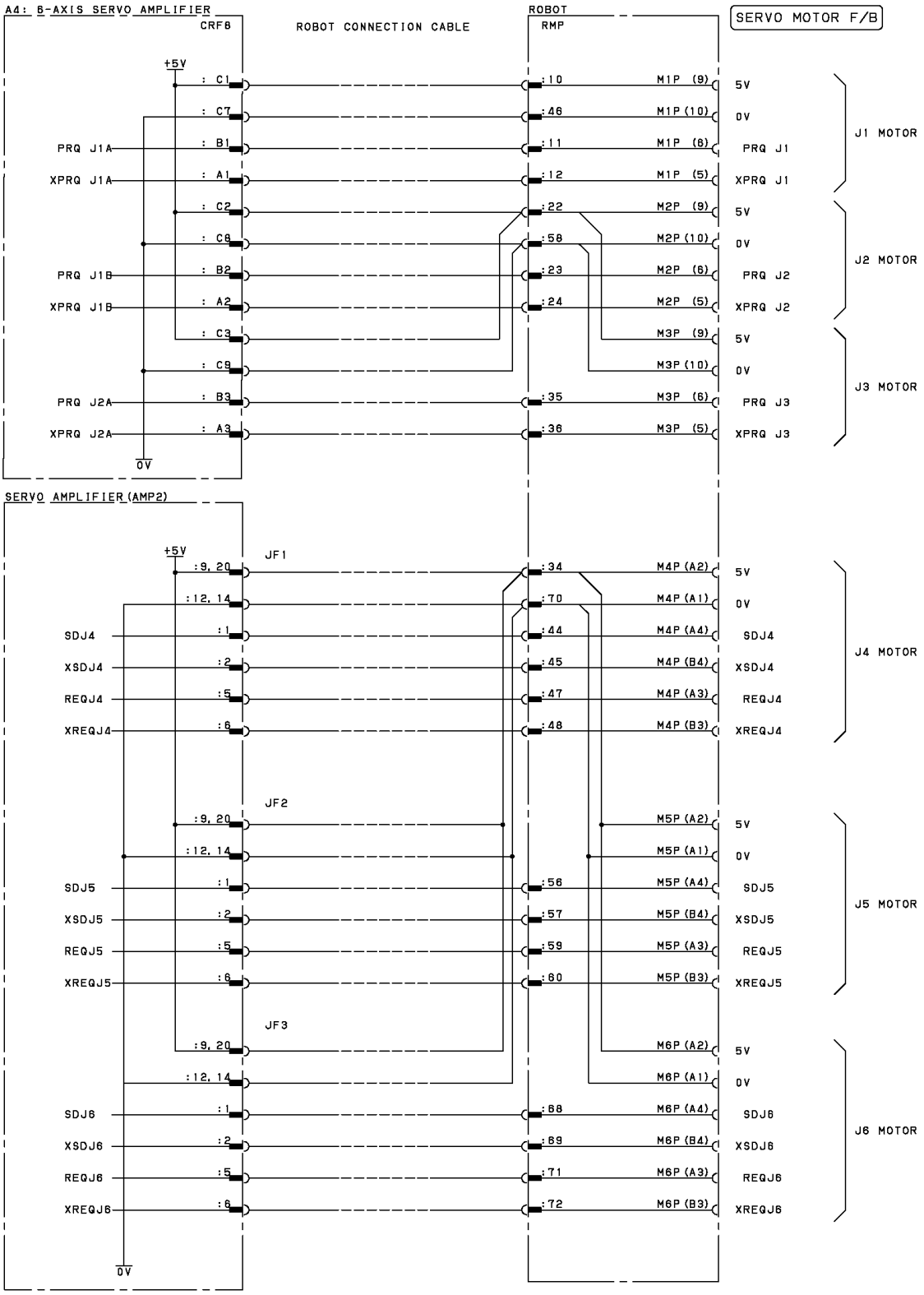

Fig.B (ap) Pulsecoder Signal Connection Diagram (Group7; M-430*i*A/2P)

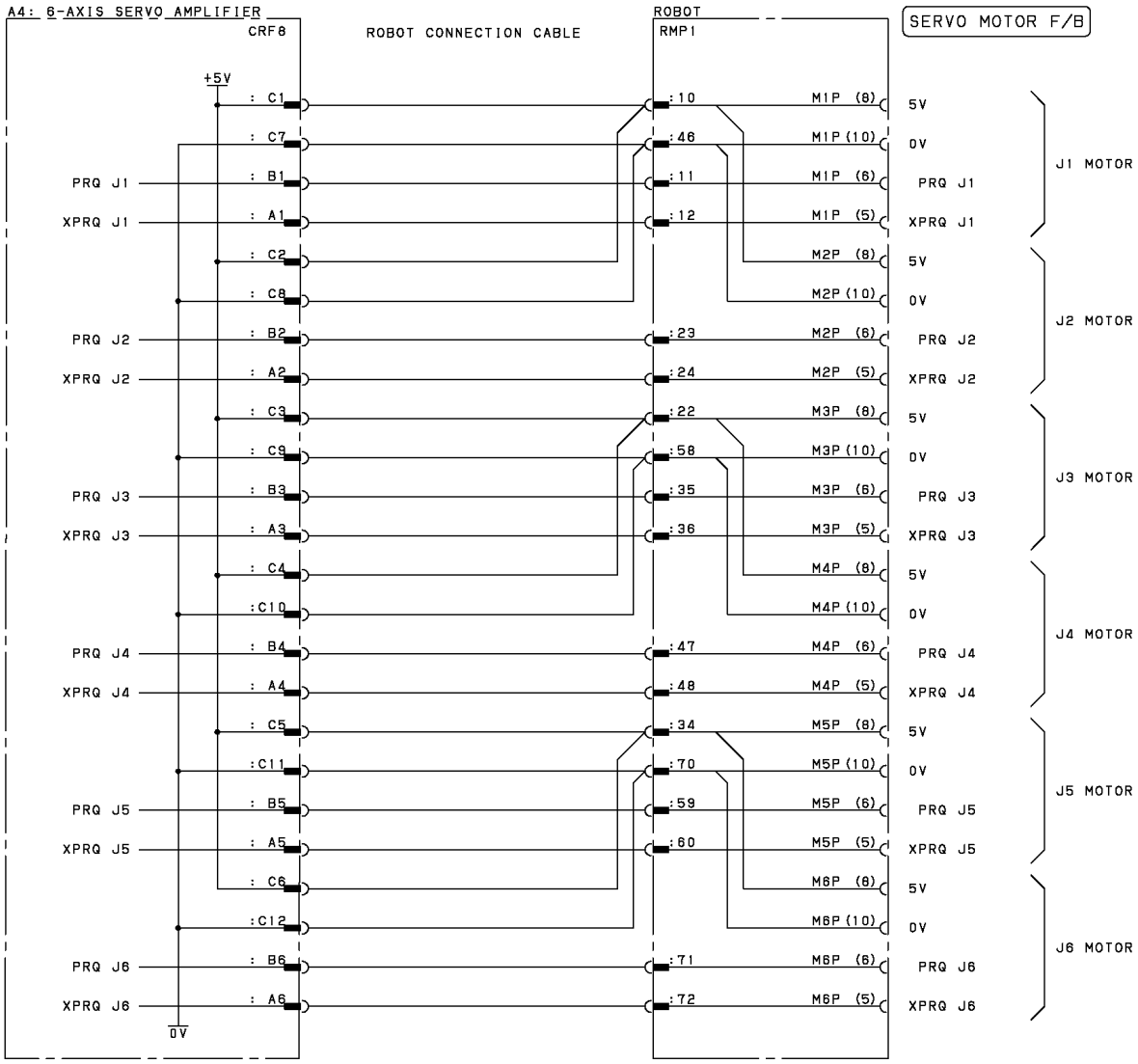

Fig.B (aq) Pulsecoder Signal Connection Diagram (Group8; ARC Mate 100*i*C, ARC Mate 120*i*C, ARC Mate 100*i*D, ARC Mate 120*i*D, M-10*i*A, M-20*i*A, M-20*i*B, M-10*i*D, M-20*i*D, CR-4*i*A, CR-7*i*A, CR-14*i*A, CR-15*i*A, CR-35*i*A, LR Mate 200*i*D)

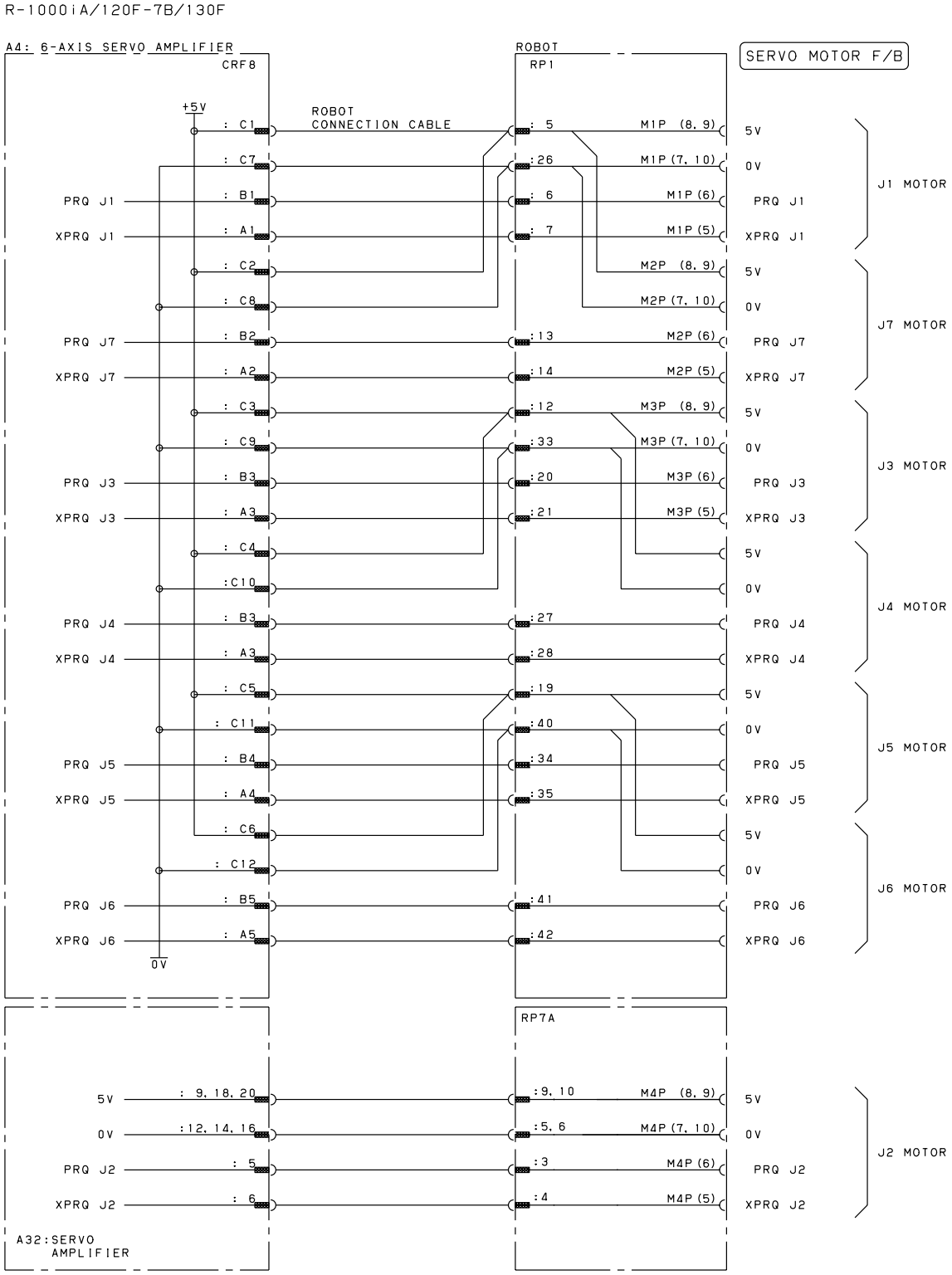

Fig.B (ar) Pulsecoder Signal Connection Diagram (Group12; R-1000*i*A/120F-7B/130F)

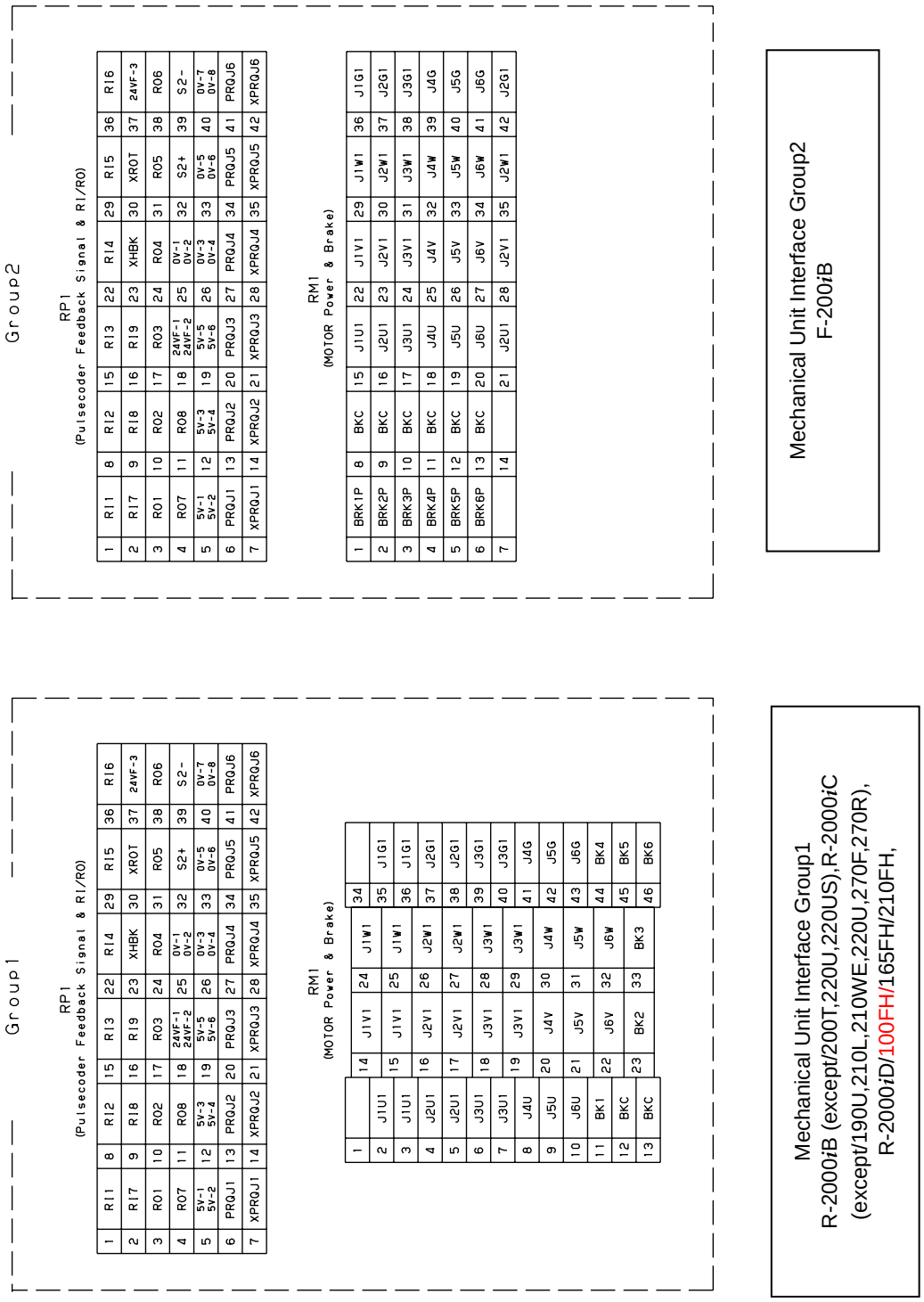

Fig.B (as) Mechanical unit interface (Group1, Group2)

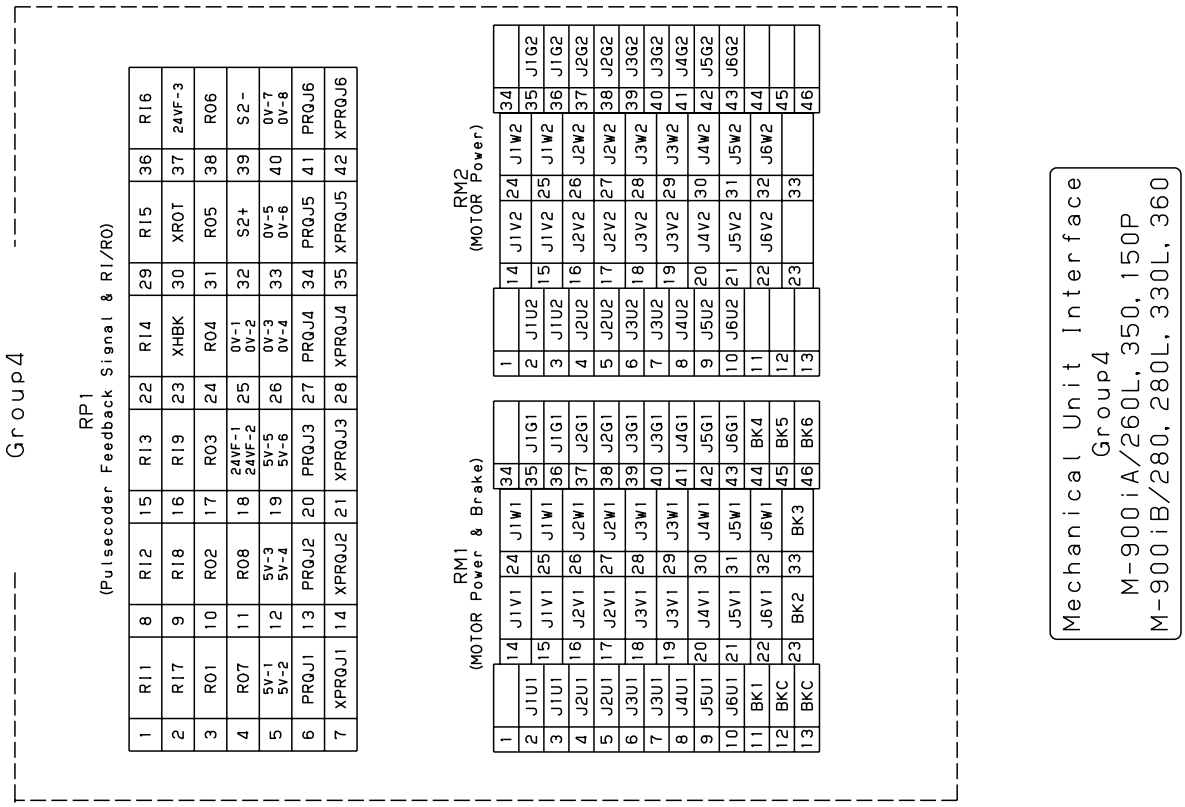

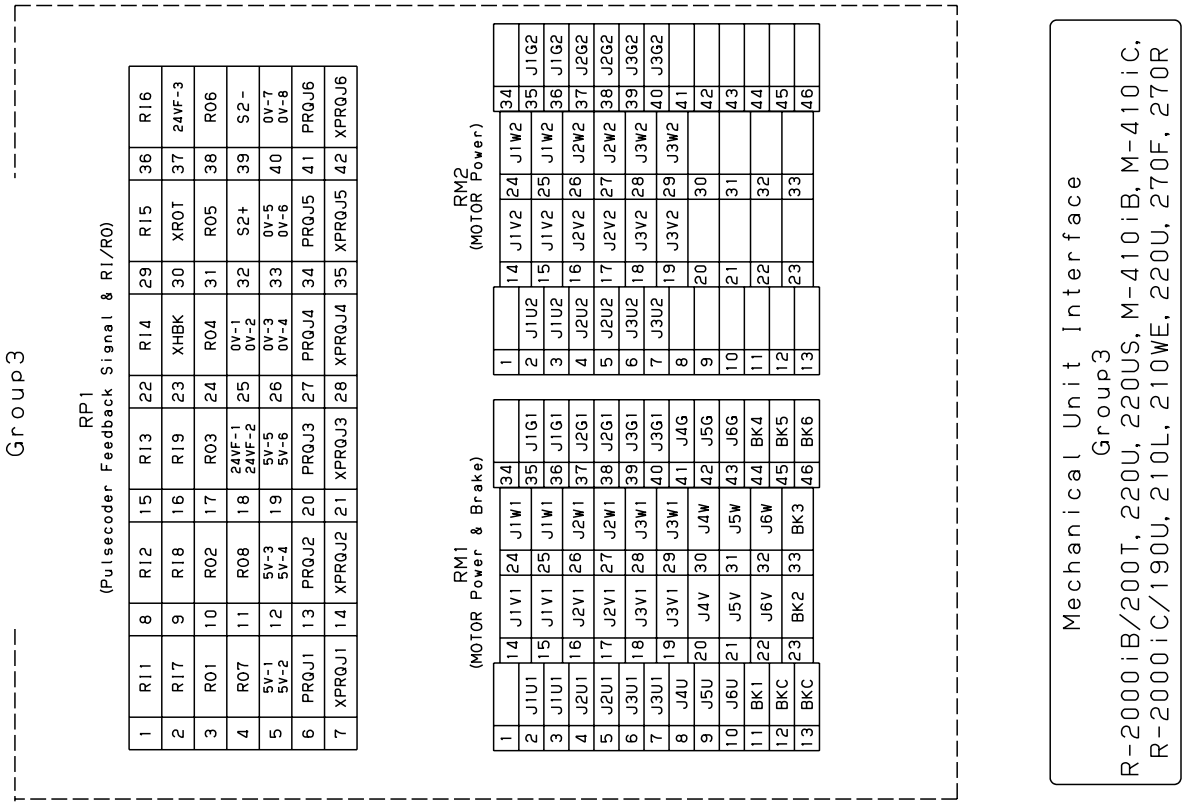

Fig.B (at) Mechanical unit interface (Group3, Group4)

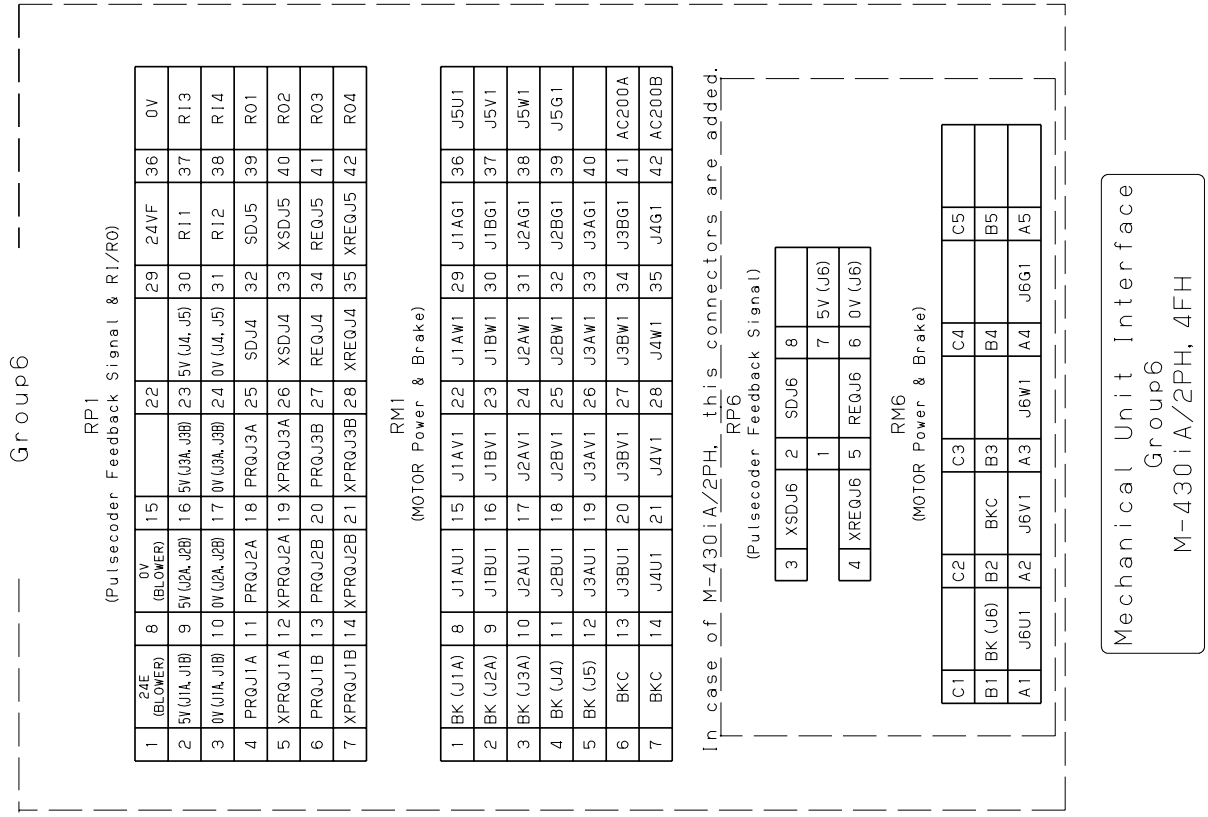

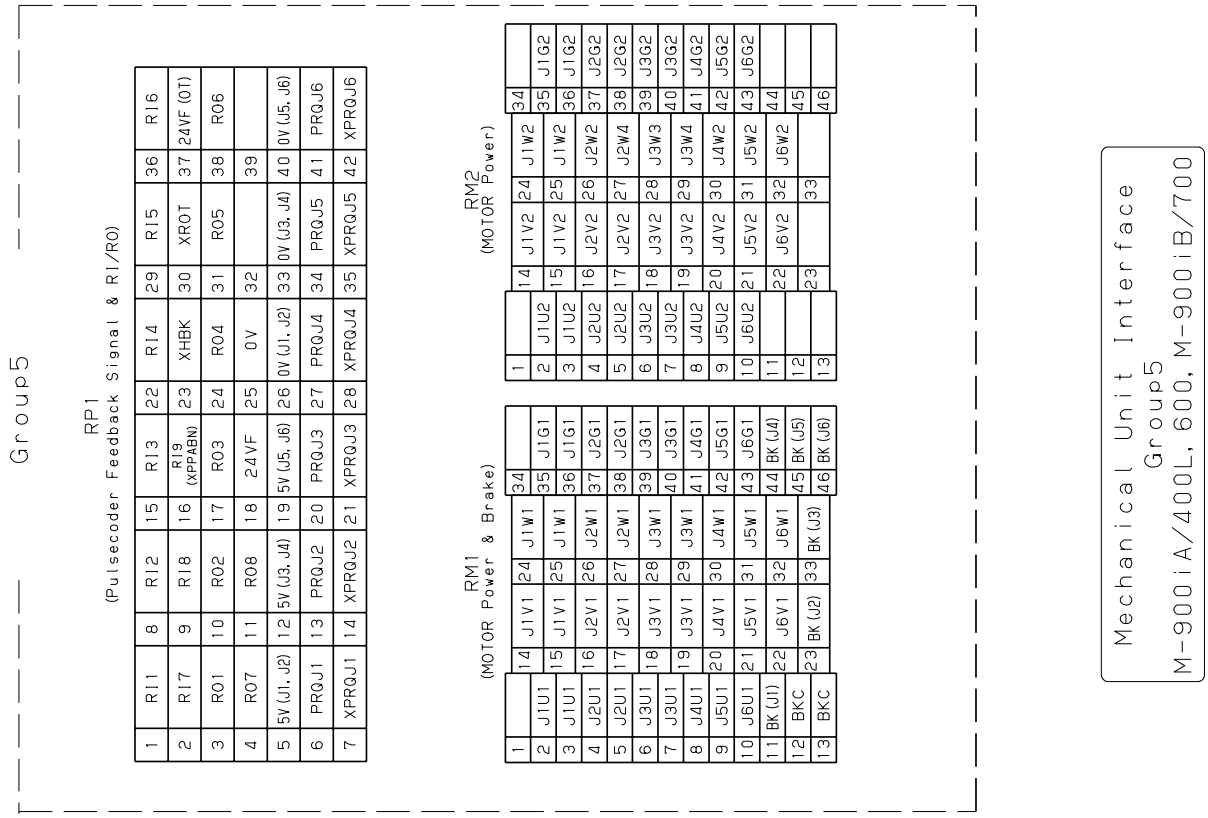

Fig.B (au) Mechanical Unit Interface (Group5, Group6)

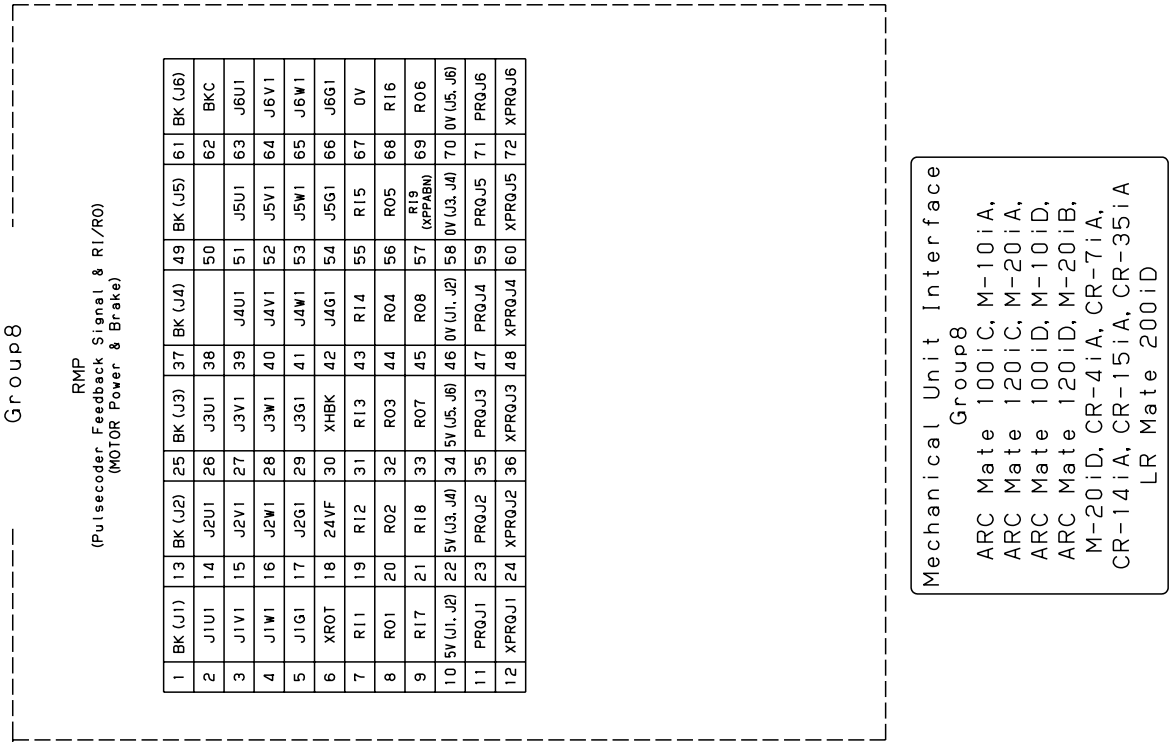

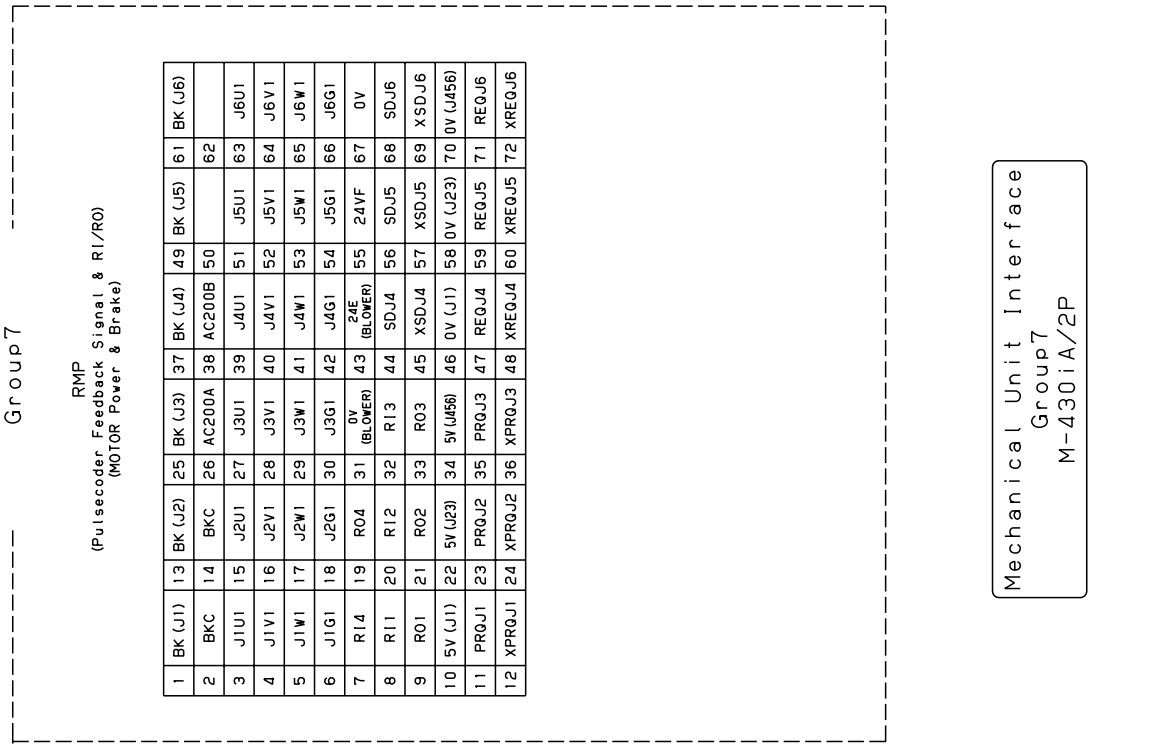

Fig.B (av) Mechanical Unit Interface (Group7, Group8)

Group 11

RP1
(Pulsecoder Feedback Signal & RI/RO)

1	RI1	8	RI2	15	RI3	22	RI4	29	RI5	36	RI6
2	RI7	9	RI8	16	RI9	23	XHBK	30	24VF (FAN)	37	24VF-3
3	RO1	10	RO2	17	RO3	24	RO4	31	RO5	38	RO6
4	RO7	11	RO8	18	24VF-1 24VF-2	25	0V-1 0V-2	32	S2+	39	S2-
5	5V-1 5V-2	12	5V-3 5V-4	19	5V-5 5V-6	26	0V-3 0V-4	33	0V-5 0V-6	40	0V-7 0V-8
6	PRQJ1	13	PRQJ2	20	PRQJ3	27	PRQJ4	34	PRQJ5	41	PRQJ6
7	XPRQJ1	14	XPRQJ2	21	XPRQJ3	28	XPRQJ4	35	XPRQJ5	42	XPRQJ6

RM1
(MOTOR Power & Brake)

1		14	J1V1	24	J1W1	34	
2	J1U1	15	J1V1	25	J1W1	35	J1G1
3	J1U1	16	J2V1	26	J2W1	36	J1G1
4	J2U1	17	J2V1	27	J2W1	37	J2G1
5	J2U1	18	J3V1	28	J3W1	38	J2G1
6	J3U1	19	J3V1	29	J3W1	39	J3G1
7	J3U1	20	J4V1	30	J4W1	40	J3G1
8	J4U1	21	J5V1	31	J5W1	41	J4G1
9	J5U1	22	J6V1	32	J6W1	42	J5G1
10	J6U1	23	BK1_2 (J2)	33	BK3	43	J6G1
11	BK1_2 (J1)					44	BK4_5_6 (J4)
12	BKC (J1, J2, J3)					45	BK4_5_6 (J5)
13	BKC (J4, J5, J6)					46	BK4_5_6 (J6)

Mechanical Unit Interface
M-2iA, M-3iA

Fig.B (aw) Mechanical Unit Interface (Group11)

Group12

RP1
(Pulsecoder Feedback Signal & RI/RO)

1	RI1	8	RI2	15	RI3	22	RI4	29	RI5	36	RI6
2	RI7	9	RI8	16	RI9 (XPPABN)	23	XHBK	30	XROT	37	24VF (OT)
3	RO1	10	RO2	17	RO3	24	RO4	31	RO5	38	RO6
4	RO7	11	RO8	18	24VF	25	0V	32		39	
5	5V (J1, J7)	12	5V (J3, J4)	19	5V (J5, J6)	26	0V (J1, J7)	33	0V (J3, J4)	40	0V (J5, J6)
6	PRQJ1	13	PRQJ7	20	PRQJ3	27	PRQJ4	34	PRQJ5	41	PRQJ6
7	XPRQJ1	14	XPRQJ7	21	XPRQJ3	28	XPRQJ4	35	XPRQJ5	42	XPRQJ6

RP7A
(Pulsecoder Feedback Signal)

1		5	0V (J2)	9	5V (J2)	13		17		21	
2		6	0V (J2)	10	5V (J2)	14		18		22	
3	PRQJ2	7		11		15		19		23	
4	XPRQJ2	8		12		16		20		24	

RM1
(MOTOR Power & Brake power)

1		14	J1V1	24	J1W1	34	
2	J1U1	15	J1V1	25	J1W1	35	J1G1
3	J1U1					36	J1G1
4	J7U1	16	J7V1	26	J7W1	37	J7G1
5	J7U1	17	J7V1	27	J7W1	38	J7G1
6	J3U1	18	J3V1	28	J3W1	39	J3G1
7	J3U1	19	J3V1	29	J3W1	40	J3G1
8	J4U1					41	J4G1
9	J5U1	20	J4V1	30	J4W1	42	J5G1
10	J6U1	21	J5V1	31	J5W1	43	J6G1
11	BK (J1)	22	J6V1	32	J6W1	44	BK (J4)
12	BKC	23	BK (J7)	33	BK (J3)	45	BK (J5)
13	BKC					46	BK (J6)

RM7A
(MOTOR Power & Brake power)

A1	J2U1	A2	J2V1	A3	J2W1
B1	J2G1	B2	BK (J2)	B3	BKC

Mechanical Interface
Group12
R-1000iA/120F-7B, 130F

Fig.B (ax) Mechanical Unit Interface (Group12)

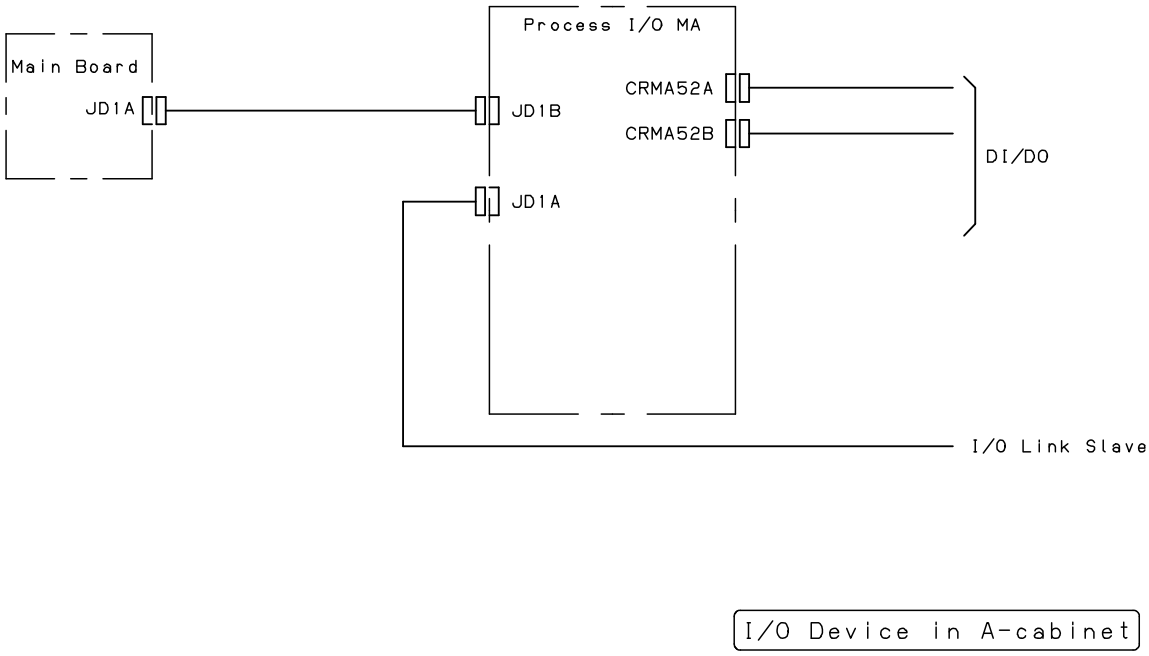

Fig.B (ay) I/O device connection diagram (A-cabinet)

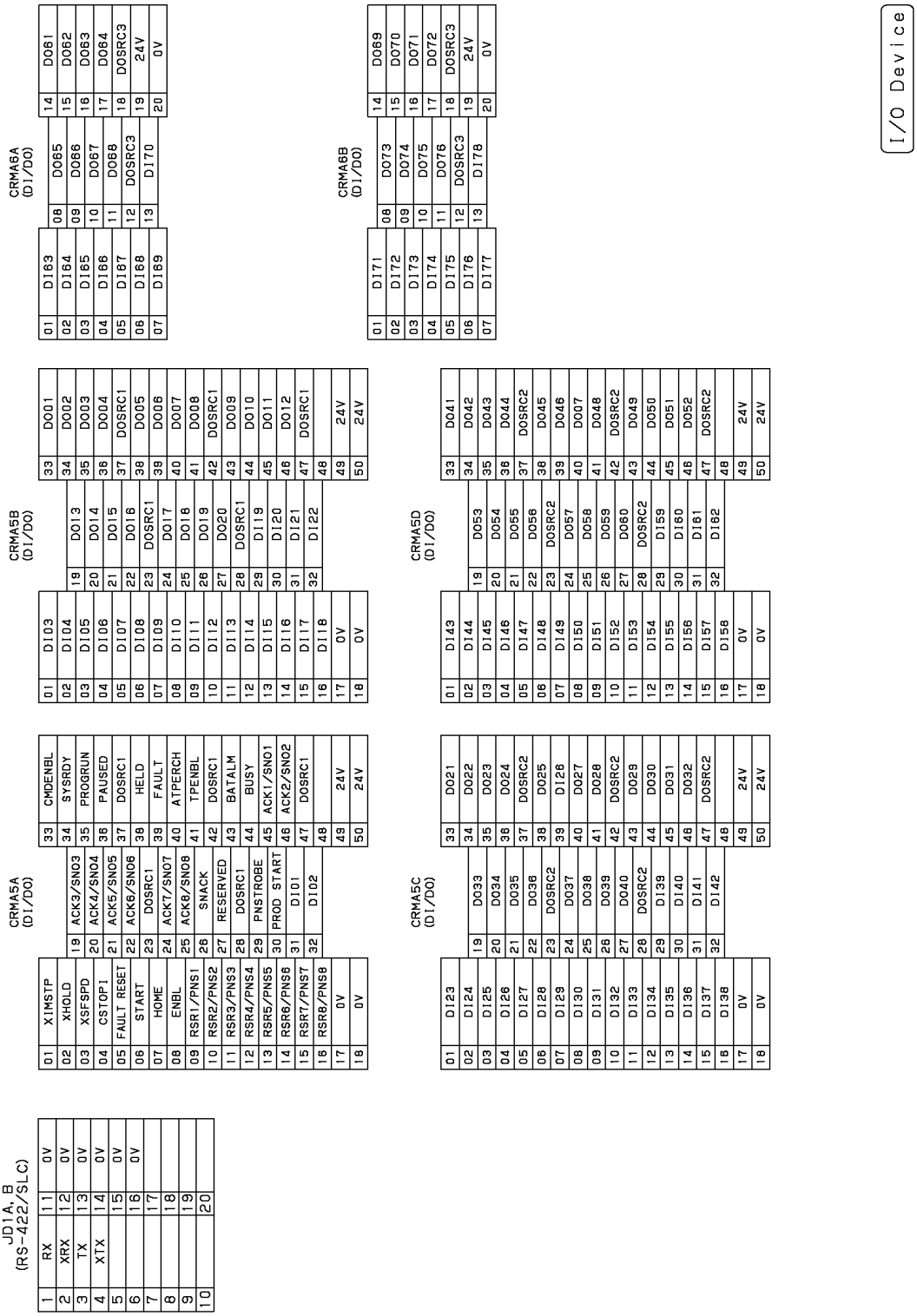

Fig.B (az) Process I/O board connector table (JA, JB)

C SPECIFICATIONS OF PERIPHERAL DEVICE INTERFACE

C.1 SIGNAL

The following table lists the I/O signals used for the peripheral device interface in the R-30*i*B/R-30*i*B Plus controller.

Input signals (Refer to C.3.1)

Signal	Description
*IMSTP	Instantaneous stop signal
*HOLD	Hold signal
*SFSPD	Safety speed signal
CSTOPI	Cycle stop signal
FAULT_RESET	Alarm release signal
START	Cycle start signal
HOME	Robot service request/program number select signal (NOTE)
ENBL	Enabling signal
RSR1/PNS1	Robot service request/program number select signal (NOTE)
RSR2/PNS2	Robot service request/program number select signal (NOTE)
RSR3/PNS3	Robot service request/program number select signal (NOTE)
RSR4/PNS4	Robot service request/program number select signal (NOTE)
RSR5/PNS5	Robot service request/program number select signal (NOTE)
RSR6/PNS6	Robot service request/program number select signal (NOTE
RSR7/PNS7	Robot service request/program number select signal (NOTE)
RSR8/PNS8	Robot service request/program number select signal (NOTE)
PNSTROBE	PNS strobe signal
PROD_START	Automatic operation start signal
DI01	General-purpose input signal
DI02	General-purpose input signal
DI03	General-purpose input signal
DI04	General-purpose input signal
DI05	General-purpose input signal
DI06	General-purpose input signal
DI07	General-purpose input signal
DI08	General-purpose input signal
DI09	General-purpose input signal
DI10	General-purpose input signal
DI11	General-purpose input signal
DI12	General-purpose input signal
DI13	General-purpose input signal
DI14	General-purpose input signal
DI15	General-purpose input signal
DI16	General-purpose input signal
DI17	General-purpose input signal
DI18	General-purpose input signal
DI19	General-purpose input signal
DI20	General-purpose input signal
DI21	General-purpose input signal
DI22	General-purpose input signal

NOTE

RSR: Robot Service Request (RSR5 to RSR8 are optional)
PNS: Program Number Select Input (optional)
Whether RSR is used or PNS is used can be preset.

Output signals (Refer to C.3.2)

Signal	Description
CMDENBL	Command acceptance enabled signal
SYSRDY	System ready signal
PROGRUN	Program run signal
PAUSED	Program paused signal
HELD	Held signal
FAULT	Alarm signal
ATPERCH	Reference point signal
TPENBL	Teach pendant enabled signal
BATALM	Battery alarm signal
BUSY	Operating signal
ACK1/SNO1	RSR acknowledge/Selected program number signal
ACK2/SNO2	RSR acknowledge/Selected program number signal
ACK3/SNO3	RSR acknowledge/Selected program number signal
ACK4/SNO4	RSR acknowledge/Selected program number signal
ACK5/SNO5	RSR acknowledge/Selected program number signal
ACK6/SNO6	RSR acknowledge/Selected program number signal
ACK7/SNO7	RSR acknowledge/Selected program number signal
ACK8/SNO8	RSR acknowledge/Selected program number signal
SNACK	PNS acknowledge signal
_____	Not used (for future expansion)
DO01	General-purpose output signal
DO02	General-purpose output signal
DO03	General-purpose output signal
DO04	General-purpose output signal
DO05	General-purpose output signal
DO06	General-purpose output signal
DO07	General-purpose output signal
DO08	General-purpose output signal
DO09	General-purpose output signal
DO10	General-purpose output signal
DO11	General-purpose output signal
DO12	General-purpose output signal
DO13	General-purpose output signal
DO14	General-purpose output signal
DO15	General-purpose output signal
DO16	General-purpose output signal
DO17	General-purpose output signal
DO18	General-purpose output signal
DO19	General-purpose output signal
DO20	General-purpose output signal

C.2 SETTING COMMON VOLTAGE

All process I/O boards have a jumper to set the common voltage of input signals to 0 V or 24 V. The system automatically adjusts the polarity by software according to the status of this pin. Therefore, you can operate the system without being concerned about the setting of the common voltage.

To ensure safety, the common reference voltage of the following four signals, is remains at +24V.

*IMSTP
*HOLD
*SFSPD
CSTOPI

C.3 I/O SIGNALS

C.3.1 Input Signals

This section describes the specifications of each input signal.

(1) Instantaneous stop signal (input) *IMSTP
Effective: At any time
Function: Use the normally closed switch because it is a reverse signal. The system turns off power to the servo unit when the *IMSTP is open (turned off). Do not use *IMSTP as safety relevant signal. For safety purpose, use the external emergency stop signal.

(2) Alarm release signal (input) FAULT RESET
Effective: In the alarm status
Function: The FAULT RESET signal releases the alarm status. If the servo unit has been turned off, it also turns on the unit. At the same time, the alarm display on the teach pendant (the top line) is cleared.
Description: This signal releases only the alarm status. It does not re-start execution of the program. The robot will keep running if the signal is triggered "ON" during operation.

(3) Hold signal (input) *HOLD
Effective: At any time
Function: Use the normally-closed switch because it is a reverse signal. The *HOLD signal has the same function as the hold button on the teach pendant. It halts the current program and stops the operation of the robot. While this signal is being input, the held signal (output) HELD is turned on and the robot cannot be operated.

(4) Start signal (input) START
Effective: When the command acceptance enabled signal (output) CMDENBL is turned on. See the description of CMDENBL in Section C.3.2 (1) for details.
Function: This input signal starts the selected program at the falling edge when the signal is turned off after being turned on. Its function differs according to the setting of parameter $SHELL_CFG. $CONT_ONLY.
- If parameter $SHELL_CFG.$CONT_ONLY is set to DISABLED, the START signal starts the program which has been selected from the teach pendant. By default, the program starts from the current cursor position.
- If parameter $SHELL_CFG.$CONT_ONLY is set to ENABLED, the START signal only resumes the execution of the temporarily held program. To execute an inactivated program from the start, input the PROD_START signal.

(5) Cycle stop signal (input) CSTOPI

Effective: At any time

Function:

- If parameter $SHELL_CFG.$USE_ABORT is set to DISABLED, the CSTOPI signal releases the program from the wait status caused by an RSR. It does not stop the execution of the current program and allows it to continue processing (by default).
- If parameter $SHELL_CFG.$USE_ABORT is set to ENABLED, the CSTOPI signal immediately cancels the execution of the current program. The program returns to the status in which it was before execution, and the information for the subprogram to return to the main program is lost. At the same time, this signal also releases the program from the wait status caused by RSR.

(6) Enabling signal (input) ENBL

Effective: At any time

Function: If the ENBL signal is turned off, the operation of the robot or the activation of a program is inhibited, and the execution of the current program is suspended.

(7) Safety speed signal (input) *SFSPD

Effective: At any time

Function:

- Use the normally-closed switch because it is a reverse signal. Usually this switch should be connected to safety fence. It must be set normally on.
- Since the *SFSPD signal is counted as a remote condition, such input signals as RSR and START to the peripheral device interface cannot take effect unless this signal is turned on.
- If this signal is turned from on to off during robot operation, the execution of the current program is suspended. At the same time, the overriding value is switched to a preset value (parameter $SCR. $FENCEOVER.)
- As long as this signal is off, the overriding value cannot be increased beyond the preset value ($SCR.$SFJOGOVLIM: For jog, $SCR. $SFRUNOVLIM : For test execution.)

(8) Robot service request signal (input) RSR1/RSR2/RSR3/RSR4

Effective: When the command acceptance enabled signal (output) CMDENBL is turned on. See the description of CMDENBL in Section C.3.2 (1) for details.

Function:

- The user can choose between RSR and PNS (optional), although they cannot be used simultaneously.
- Four input signals, RSR1 to RSR4, are used.
- If a signal is input to an RSR input, a specified program is started. The program number can be set by a menu.
- If another program has already started processing, the newly activated program enters the wait status. As soon as the current program terminates, the waiting program starts processing.
- By using an RSR instruction, each RSR in a program can be enabled or disabled.
- A menu is provided to register the program number of a specified program when each RSR is input. (Refer to the application manual for details of the menu).

```
+----------------------------------------+
|                                        |
|////////////////////////////////////////|
|                                   1/8  |
|  1 Job selection:                 RSR  | RSR or PNS
|  2 RSR1 program number:            12  | 0..9999
|  3 RSR2 program number:            23  | 0..9999
|  4 RSR3 program number:             5  | 0..9999
|  5 RSR4 program number:            64  | 0..9999
|  6 Base number:                   100  | 0..9999
|  7 Acknowledge:                Enabled | Enabled or disabled
|  8 Acknowledge pulse width:  250 msec  | 0..9999msec
=                                        =
|                                        |
|[ TYPE ]                                |
+----------------------------------------+
```

- When an RSR is input, the program whose program name consists of the specified program number plus a base value is started. For example, if a signal is input to RSR2 when program number 23 is registered in RSR2, the program to be started is the one with the program name calculated from the expression RSR + (RSR2 program number + base number), i.e., RSR0123.
  The base number is stored in parameter $SHELL_CFG.$JOB_BASE, and can be changed in a program with a parameter instruction. (For example, $SHELL_ CFG. $JOB_BASE =100). In this way, the combination of programs which can be started by RSRs can be changed.
- Whether the system should output an acknowledge signal to an RSR can be selected from the menu. If so specified, a pulse is output from the signal corresponding to the RSR, one of signals ACK1 to ACK4, when the input of the RSR is accepted. From the same menu, the width of the pulse can also be specified.
  It is possible to accept other RSRs while outputting an acknowledge signal.
- Input of a CSTOPIT signal can clear the program queue waiting for execution after acceptance of RSRs.

(9) PNS/PNSTROBE (input)

Signal name: PNS: Program number select

PNSTROBE: Strobe input for PNS

Effective: When the command acceptance enabled signal (output) CMDENBL is turned on. See the description of CMDENBL in Section C.3.2 (1) for details.

Function:

- The PNS/PNSTROBE signal selects whether the RSR function is used or the PNS function (optional) is used. If the PNS function is enabled, the RSR function cannot be used.
- The eight signals PNS1 to PNS8 are used to specify a program at the instant the strobe signal PNSTROBE rises.
- A menu is provided to specify the information about PNS.

```
+----------------------------------------+
|                                        |
|////////////////////////////////////////|
|                                  1/3   |
|  1 Job selection:                PNS   | RSR or PNS
|  2 Base number:                  100   | 0..9999
|  3 Acknowledge pulse width:   250 msec | 0..9999msec
|                                        |
|                                        |
|                                        |
|                                        |
=                                        =
|                                        |
|[ TYPE ]                                |
+----------------------------------------+
```

If a number other than zero is entered to PNS input, a program is selected whose program number is the entered value plus the base number. For example, if the PNS value is 23, the program to be started has the program name calculated from the expression
PNS + (entered PNS value + base number), i.e., PNS0123.
If zero is entered to PNS input, it is cleared as if no selection has been made.

- A PNS signal, which can only select a program, cannot execute the selected program. The execution of the selected program can only be started after input of automatic operation start signal PROD_START.
- For safety, the selected program cannot be changed from the teach pendant unless PNSTROBE is turned off.
- If a program is selected by PNS, the program number is output to selected program number signal (output) SNO, and a pulse is output to program selection acknowledge signal SNACK. Using these signals, peripheral devices can confirm the correct program has been selected. For the timing of these signals, see the sections describing SNO and SNACK.
- The following operations are effective for the program selected by PNS. You can:
  - Start up a program by input of automatic operation start signal PROD_START
  - Restart the program that has been suspended.
    Inputting the START signal restarts the program selected by PNS when $SHELL_CFG.$CONT_ ONLY is set to ENABLED.
  - Input of CSTOPI cancels execution of the pro-grams selected by PNS when $SHELL_CFG.$USE_ ABORT is set to ENABLED.

(10) Automatic operation start signal (input) PROD_START

Effective: When the command acceptance enabled signal (output) CMDENBL is turned on. See the description of CMDENBL in Section C.3.2 (1) for details.

Function: This input signal executes the selected program at the falling edge when the signal is turned off after being turned on.

C.3.2 Output Signals

This section describes the specifications of output signals for the peripheral device interface.

(1) Command acceptance enabled signal (output) CMDENBL

Turned on: When the remote conditions are satisfied and the system is not in the alarm status.

Turned off: When the remote conditions are not satisfied or the system is in the alarm status. The remote conditions are satisfied when all of the following are satisfied.

- The teach pendant is in the DISABLED status.
- The remote/local setting is set to REMOTE.
- Parameter $RMT_MASTER is set to 0 (external interface).

- Signal *SFSPD is set to on, or in the normal status.

(2) System ready signal (output) SYSRDY
Turned on: When power is applied to the motor of the robot.
Turned off: When power is not applied to the motor of the robot.

(3) Program run signal (output) PROGRUN
Turned on: When the program is being executed.
Turned off: When the program is not being executed.

(4) Held signal (output) HELD
This signal is used to check the status of the hold input.
Turned on: When the hold button on the teach pendant (or input) is being pressed down (or turned on).
Turned off: When the hold button on the teach pendant (or input) is not being pressed down (or is turned off).

(5) Program paused signal (output) PAUSED
This signal is used together with output signal PROGRUN to determine whether a program can be restarted while it is being held.
Turned on: When a program is held and has not been restarted yet. While this signal is on, the program can be restarted and retains information such as that to return from a subprogram to the main program.
Turned off: When a program is being executed or is ready to start. If signal PROGRUN is on, the program is being executed. If signal PROGRUN is off, the program has not been executed and can be started from this status.

(6) Alarm status signal (output) FAULT
Turned on: When the system is in the alarm status (or an alarm which can stop a program execution is detected.) The indicator lamp does not go on in warning.
Turned off: When the alarm status is released by an alarm release operation.

(7) Reference point signal (output) ATPERCH
Turned on: When the robot is in the reference position specified in the parameter. (The reference point No.1 in reference point setup screen.)
Turned off: When the robot is not in the reference position specified in the parameter. (The reference point No.1 in reference point setup screen.) Up to three reference positions can be specified, but this signal is output when the robot is in the first reference position. For the other two reference positions, general-purpose signals can be assigned to output as such. (They can be set from the setup screen.)

(8) Teach pendant enabled signal (output) TPENBL
Turned on: When the teach pendant is enabled.
Turned off: When the teach pendant is disabled.

(9) Battery alarm signal (output) BATALM
Turned on: When the voltage of the battery for the CMOS memory backup drops below the reference.
Turned off: When the voltage of the battery for the CMOS memory backup is at the normal level.

(10) Operating signal (output) BUSY
Turned on: When a program is being executed or is being processed from operation panels such as the teach pendant. (This has the same function as that of the BUSY lamp on the teach pendant.)

Turned off: When a program is not being executed nor is being processed from operation panels such as the teach pendant.

(11) RSR acknowledge signals (output) ACK1/ACK2/ACK3/ACK4
These signals are used together with the RSR function. They can be specified to be enabled or disabled from the RSR setup menu.
Turned on: When one of the signals from RSR1 to RSR4 is input and accepted. A pulse whose width is specified from the menu is output to acknowledge the signal.
Turned off: Normally. Since these signals are always output as pulses, they are normally in the off status.

The following chart shows the timing of the RSR input and ACK output.

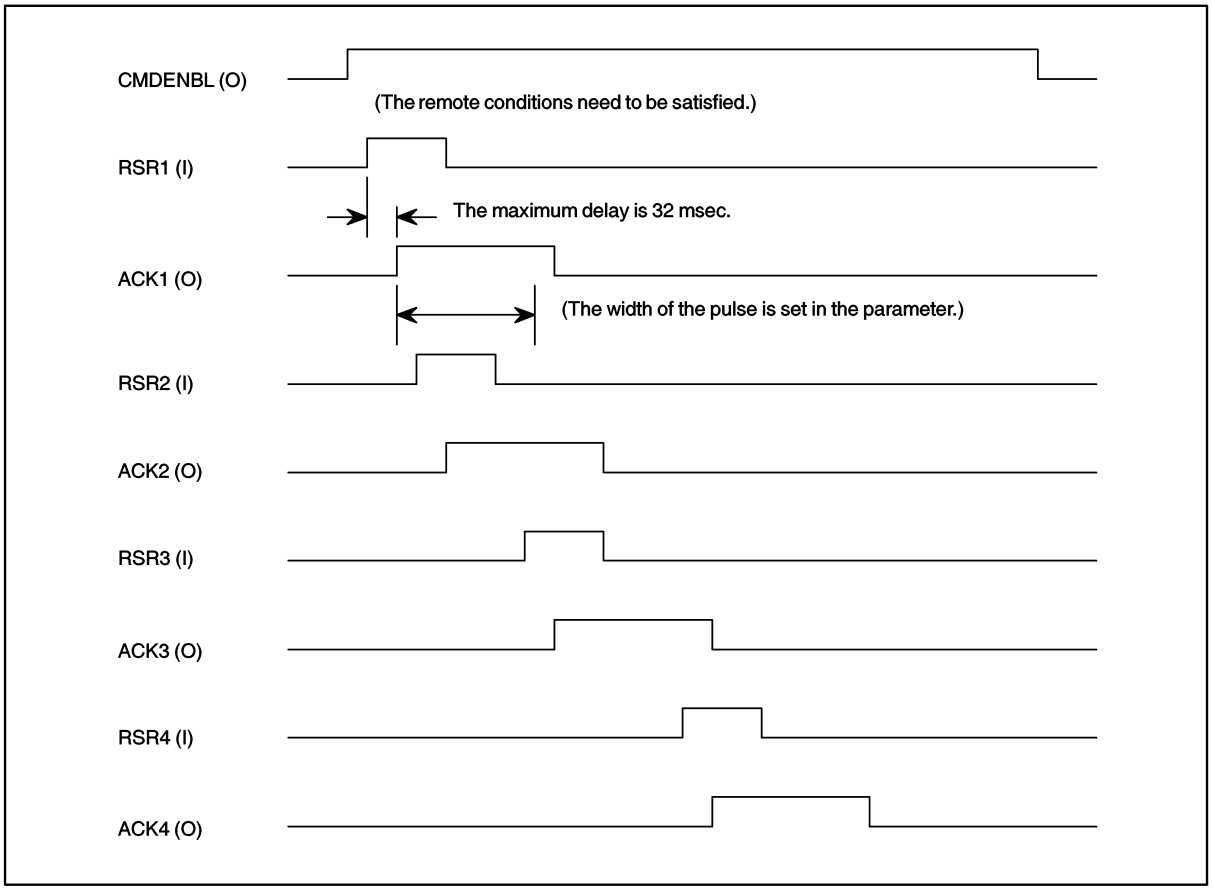

* Other RSR signals can be accepted even when the ACK signal is being output.

(12) PNS acknowledge signal (output) SNO/SNACK
These signals are used together with the PNS function.
Turned on: Whenever the PNS function is enabled. The selected program number is displayed in binary code (SN01 to SN08) on the teach pendant. If the number cannot be represented as an eight-bit number, it becomes zero. After selecting a program by PNS, a pulse is output from signal SNACK as a part of the PNS operation. The width of the pulse can be specified from the menu. See the timing chart below.

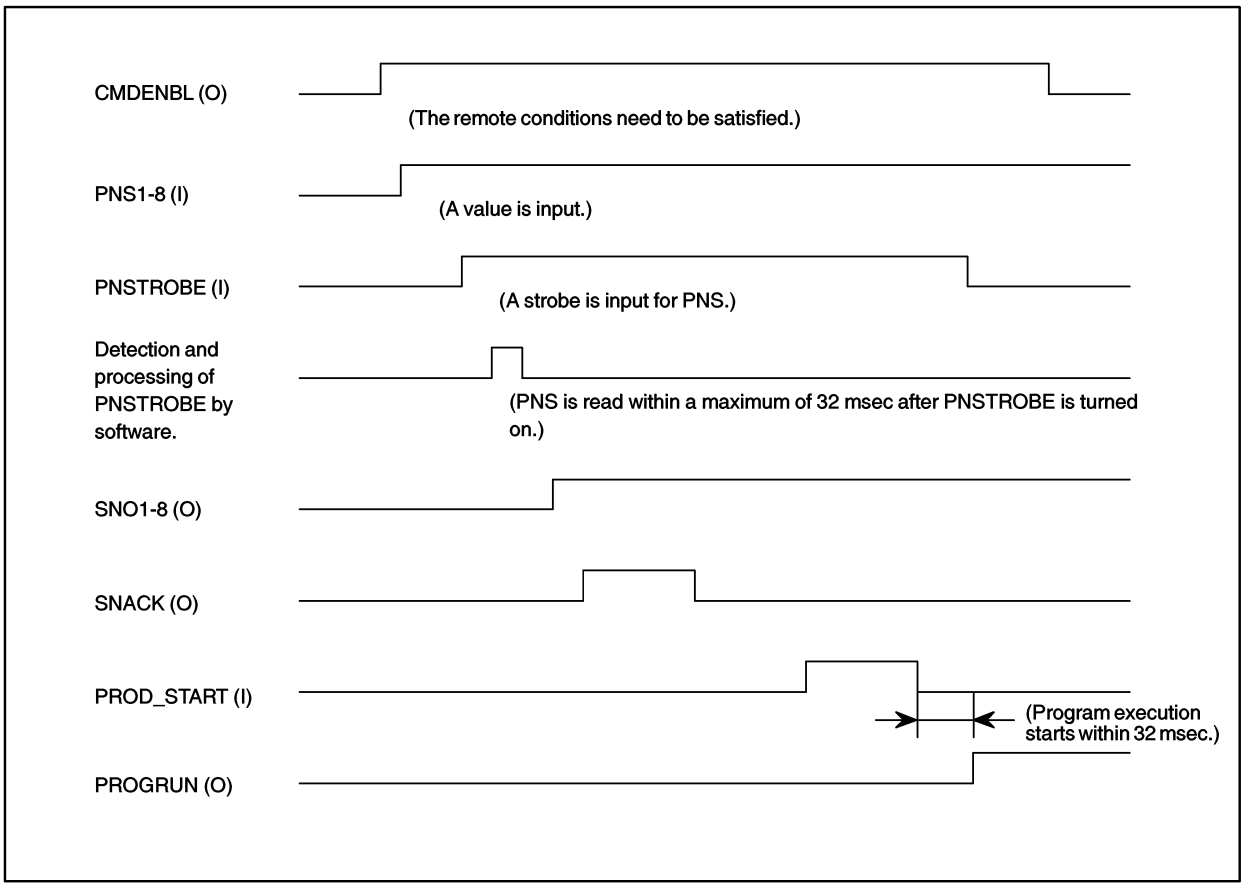

C.4 SPECIFICATIONS OF DIGITAL INPUT/OUTPUT

C.4.1 Overview

This section describes the external specifications of digital and analog input/output in the R-30*i*B/R-30*i*B Plus controller.

C.4.2 Input/Output Hardware Usable in the R-30*i*B/R-30*i*B Plus Controller

The R-30*i*B/R-30*i*B Plus controller can use up to 512 digital input and output points or an equivalent number of analog input and output points. One analog input/output point uses the resources equivalent to those used by 16 digital I/O points.
The R-30*i*B/R-30*i*B Plus can use a total of up to 512 I/O points.

The R-30*i*B/R-30*i*B Plus controller can use the following I/O hardware.
- Process I/O printed board
- I/O unit model A

The process I/O board and the I/O unit model A can be used together.

C.4.3 Software Specifications

(1) RI/RO
These are signals sent to the connector at the wrist of the robot.
They cannot be assigned (redefined) and are fixed.
The standard format is eight inputs and eight outputs. The number of points that can be used for the connector at the wrist depends on the individual robot.

(2) DI/DO
The signal No. that is determined at hardware can be changed by software operation.

(3) Analog I/O
An analog I/O signal can access the analog I/O port (optional) on the process I/O board or the I/O port on the analog I/O module (used together with the I/O unit model A).
It reads and writes the digital value converted from the analog value of the I/O voltage. It means that the value does not always represent the real I/O voltage.

(4) Group I/O
Group I/O is a function, which can input or output multiple DI/DO signals as binary codes. Any number of continuous signals of up to 16 bits can be set for its use. It can be set in the menu DETAILS on the group I/O screen.

D OPTICAL FIBER CABLE

The R-30*i*B/R-30*i*B Plus uses fiber optic cables for communication between the main board and servo amplifiers. Observe the following cautions when handling these fiber optic cables. Handle fiber optic cables with utmost care, especially when installing the unit.

(1) Protection during storage
When the electrical/optical conversion module (mounted on the printed) circuit board and the fiber optic cable are not in use, their mating surfaces must be protected with the lid and caps with which they are supplied. If left uncovered, the mating surfaces are likely to become dirty, possibly resulting in a poor cable connection.

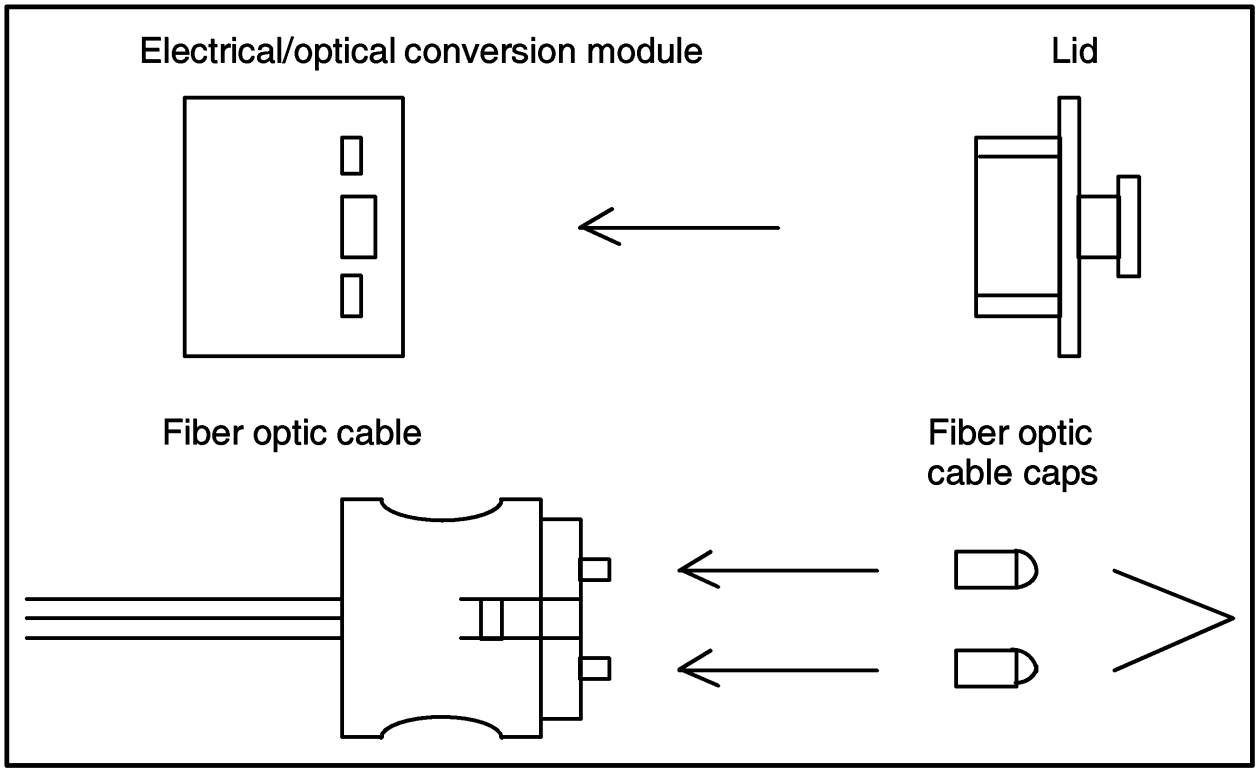

Fig.D (a) Protection of electrical/optical conversion module and fiber optic cable (when not in use)

(2) Fiber optic cable
External type

Fiber optic cord diameter:	ϕ 2.2 mm x2 cords
Diameter of cable with reinforced cover:	ϕ 7.6 mm
Tensile strength:	
Cable with reinforced cover:	75 kg
Fiber optic cord:	7 kg per cord
Between fiber optic cord and connector:	2 kg
Minimum bending radius of fiber optic cord:	25 mm
Minimum bending radius of cable with reinforced cover:	50 mm
Bending resistance (cable with reinforced cover):	10 million bending cycles at room temperature (when the bending radius is 100 mm)
Flame resistance:	Equivalent to UL VW-1
Operating temperature:	-20 to 70ºC

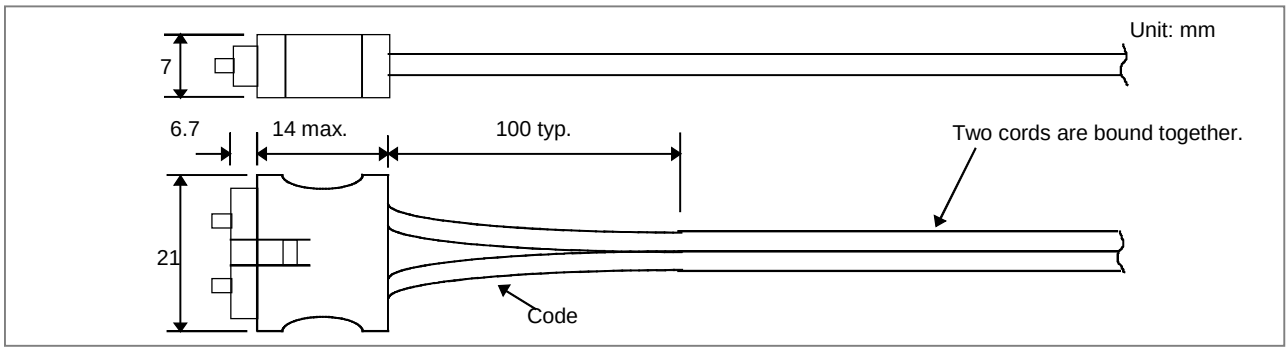

Fig.D (b) External dimensions of external optical cable Unit: mm

Internal type

Fiber optic cord diameter	: ϕ 2.2 mm×2 cords
Tensile strength	
Fiber optic cord	: 7 kg per cord
Between fiber optic cord and connector	: 2 kg
Minimum bending radius of fiber optic cord	: 25 mm
Flame resistance	: Equivalent to UL VW-1
Operating temperature	: -20 to 70ºC

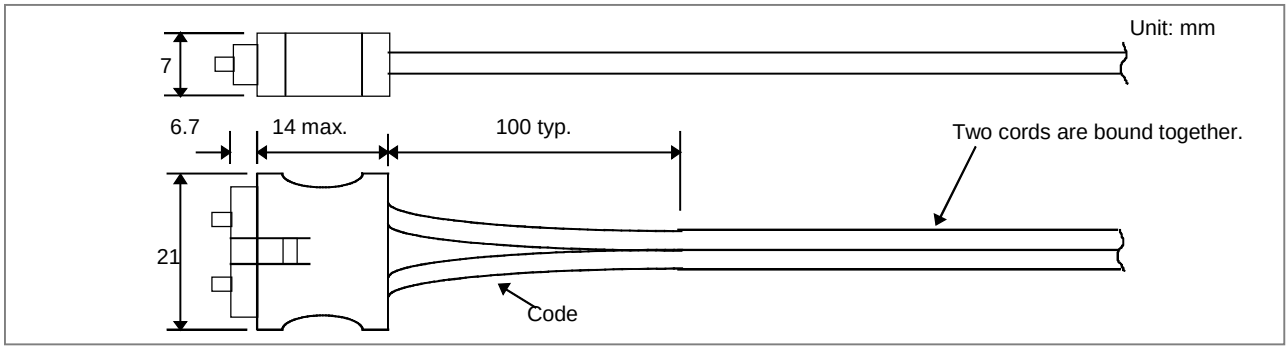

Fig.D (c) External dimensions of internal optical cable Unit: mm

- After it is connected, the optical connector is automatically locked by the lock levers on its top. To remove the connector, release the lock levers and pull the connector. (Do not pull on the fiber optic cord itself.)
- Although optical connectors cannot be connected in other than the correct orientation, always take note of the connector's orientation before making the connection.
- Take care to keep both parts of the optical connector (cable side and PCB side) clean. If they become dirty, wipe them with tissue paper or absorbent cotton to remove dirt. The tissue paper or absorbent cotton may be moistened with ethyl alcohol. Do not use any organic solvent other than ethyl alcohol.
- Fix the reinforcing cover by using a cable clamp, as shown in Fig.D(d), to prevent the weight of the fiber optic cable from being applied directly to the connecting part of the optical connector.
- Although the reinforcing cover of the external optical cable has sufficient mechanical strength, be careful not to drop heavy objects on the cable.

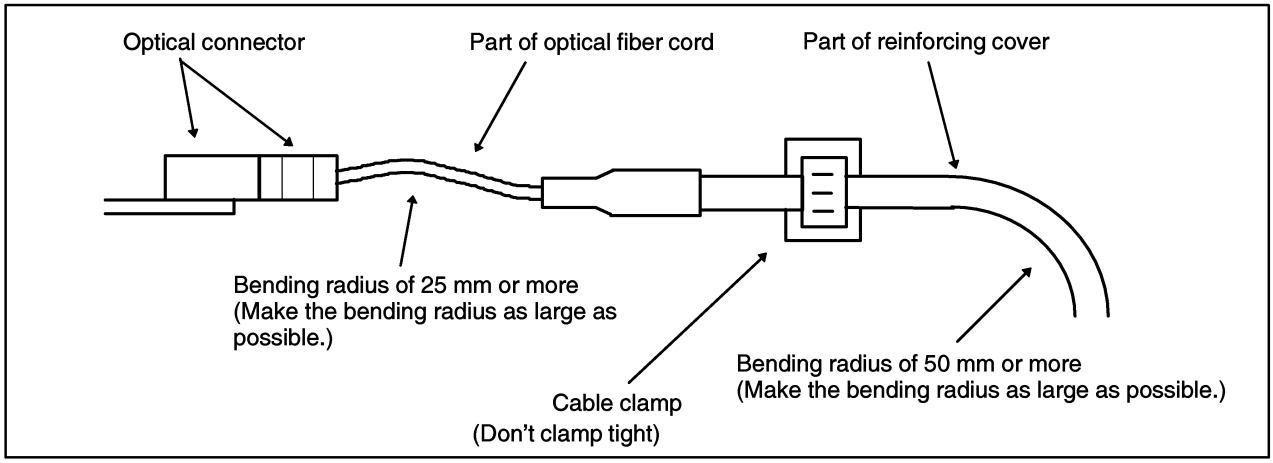

Fig.D (d) Fixing the cable with a clamp

- Any superfluous portion of the cable might be wound into loops. Should this prove necessary, make sure the diameter of each loop is at least 150 mm (for an external cable). Winding the cable into smaller loops can produce sharp curves that exceed the specified bend radius limit. Such bending can result in transmission loss, ultimately leading to a communication failure.
- When using a (cable tie) as a cable clamp, follow the instructions given below. Also, take care not to apply a bending force to one particular part of the cable when fixing it with a clamp. Failing to clamp the cable correctly might cut or damage it.

External cable:

Do not clamp the uncovered portion of the cable with a cable tie. When clamping the cable by the reinforcing cover, the clamping force is not an important factor to consider. However, ensure that the clamping force is as small as possible to ensure that the reinforcing cover is not deformed by the clamping.
If possible, the clamping force should be 5kg (111bs) or less.

Internal cable:

Lightly clamp the optical cable with a cable tie so that the cable shield is not deformed. Desirable clamping force is 1 to 2 kg (make sure that no force is applied to the cable).

Optical fiber cable for FSSB

Type	Specification	Max. length
Outside of cabinet	A66L-6001-0026#L~	50m (Slave to Slave:40m)
Inside of cabinet	A66L-6001-0023#L~	10m

E BRAKE RELEASE UNIT

E.1 SAFETY PRECAUTIONS

⚠ **WARNING**

- Support the robot arm by mechanical means to prevent it from falling down or rising up when the brake is released. Before using the brake release unit, read the Operator's manual of the robot on which you are trying to release the brake for more information.
- Confirm that the robot is fixed tightly to the floor to prevent it from falling down and to prevent unexpected movement of the robot.
- Confirm that an electrical outlet with an earth ground is used to supply power to the brake release unit and make sure that the earth ground of the brake release unit is securely connected to the earth ground of the power supply. There is danger of getting an electric shock if the earth ground is not connected.

E.2 CONFIRMATIONS BEFORE OPERATION

Confirm the followings before operation.

(1) Confirm the exterior of the brake release unit and the power cable. Do not use it if the unit and the cable are damaged.
(2) Confirm that the power supply of the robot controller is disconnected.
(3) There are three types of brake release units according to the input voltage as shown in Table E.2 (a). Confirm the input voltage of the unit to refer to the input voltage label put to the unit (Fig.E.5(a)).
(4) Confirm that the voltage of power supply is correct before connecting the power supply to the brake release unit. It is possible to damage the brake or the brake release unit when the incorrect power supply is connected to the unit.
When releasing the brake for M-2000iA/1700L/2300 in AC200V, prepare insulating transformer (200V/100V, over 1A) by customer. After that, connect Brake Release Unit (A05B-2600-C351) for AC 100V and release the brake.

Table E.2 (a) Specification of Brake release unit

Brake release unit	Unit specification	Remarks
Brake release unit (AC 100V)	A05B-2400-C151	Input voltage AC100-115V, single phase
Brake release unit (AC 200V)	A05B-2400-C152	Input voltage AC200-240V, single phase
Brake release unit (AC 100V) for M-2000*i*A/1700L/2300	A05B-2600-C351	Input voltage AC100-115V, single phase

(5) The brake release unit connection cable is different in each robot. Confirm the cable specification corresponding to the robot referring to Table E.2 (b).

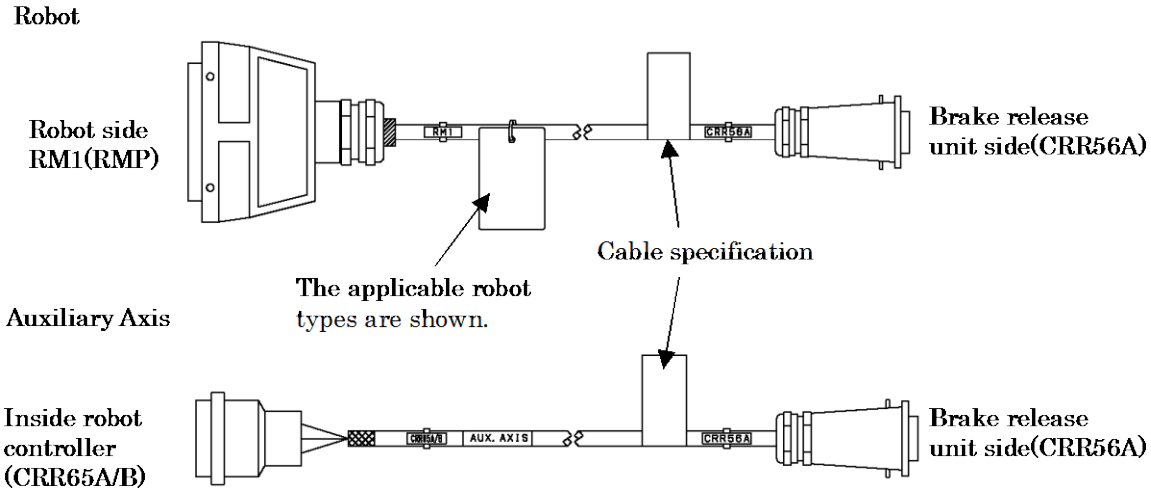

Fig.E.2 (a) Brake release unit connection cable (Except M-2000*i*A/1700L/2300)

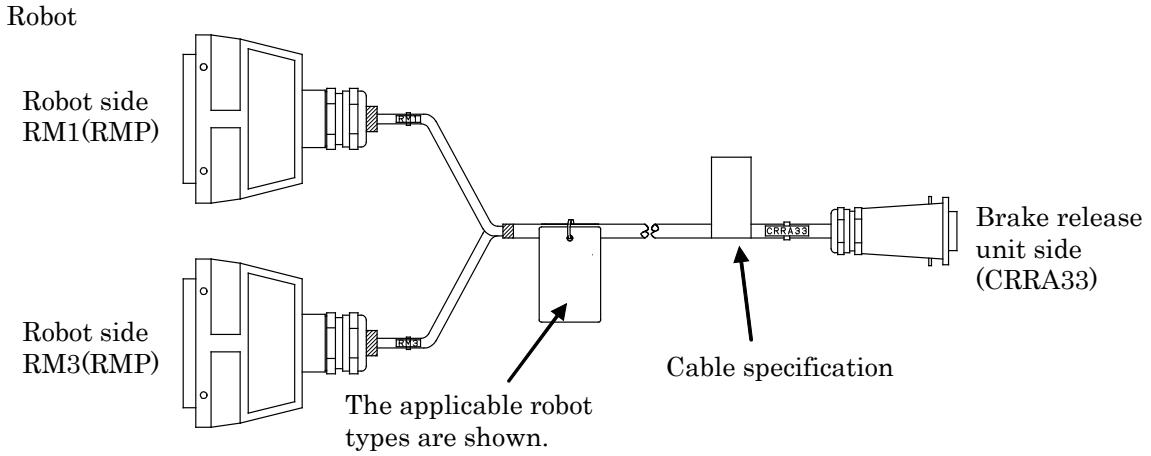

Fig.E.2 (b) Brake release unit connection cable (For M-2000*i*A/1700L/2300)

Table E.2 (b) Specification of brake release unit connection cable

Controller	Applicable robot types	Specification of cable
R-30*i*B/R-30*i*B Plus Stand alone type	R-2000*i*B, R-2000*i*C, R-1000*i*A, M-2*i*A, M-3*i*A, M-710*i*C, M-410*i*B, M-420*i*A, M-421*i*A, M-410*i*C, M-900*i*A, M-900*i*B, M-900*i*A/200P, M-2000*i*A(Except M-2000*i*A/1700L/2300)	A660-2005-T559
	M-2000*i*A/1700L/2300	A660-4005-T569
	F-200*i*B	A660-2005-T871
	M-10*i*A, M-20*i*A, M-20*i*B, M-10*i*D, M-20*i*D, CR-15*i*A, CR-35*i*A, ARC Mate 100*i*C, ARC Mate 120*i*C, ARC Mate 100*i*D, ARC Mate 120*i*D, LR Mate 200*i*D, CR-4*i*A, CR-7*i*A, CR-14*i*A	A660-2006-T881
	M-430*i*A/2PH, 4FH	A660-2006-T888
	M-430*i*A/2P	A660-2006-T887
	Aux. Axis (Usage of Brake release unit for M-2000*i*A/1700L/2300 is unavailable.)	A660-2005-T711
R-30*i*B/R-30*i*B Plus Integrated type	M-410*i*B, M-410*i*C	A660-2006-T803
7 axis Robot	R-1000*i*A/120F-7B	A660-2005-T559 (6 axis)
		A660-2006-T803 (7th axis)

E.3 OPERATION

E.3.1 In Case of Operating to the Robot

Operate the brake release unit according to the following procedures.

(1) Support the robot arm by mechanical means to prevent it from falling down or rising up when brake is released. Refer to the Operator's manual for each robot for more information.
(2) Connect the Brake Release Unit connection cable to Brake Release Unit.
(3) Disconnect the RM1 connector from Robot, and connect the Brake Release Unit connection cable to the Robot. Keep the connection of Robot connection cable except RM1 cable.
In case of M-2000*i*A/1700L/2300, disconnect RM1 and RM3 connectors from Robot, and connect the Brake Release Unit connection cable to the Robot. Keep the connection of Robot connection cable except RM1 and RM3 cables.
(4) Connect the power cable of Brake release unit to power supply.
(5) Press and hold the enabling device (the deadman switch) in the middle position.
(6) Press the brake switch '1'..'6' according to the axis whose brake you are trying to release, then the brake will be released. (Refer to Table E.3.1) Two axes or more cannot be released at the same time.

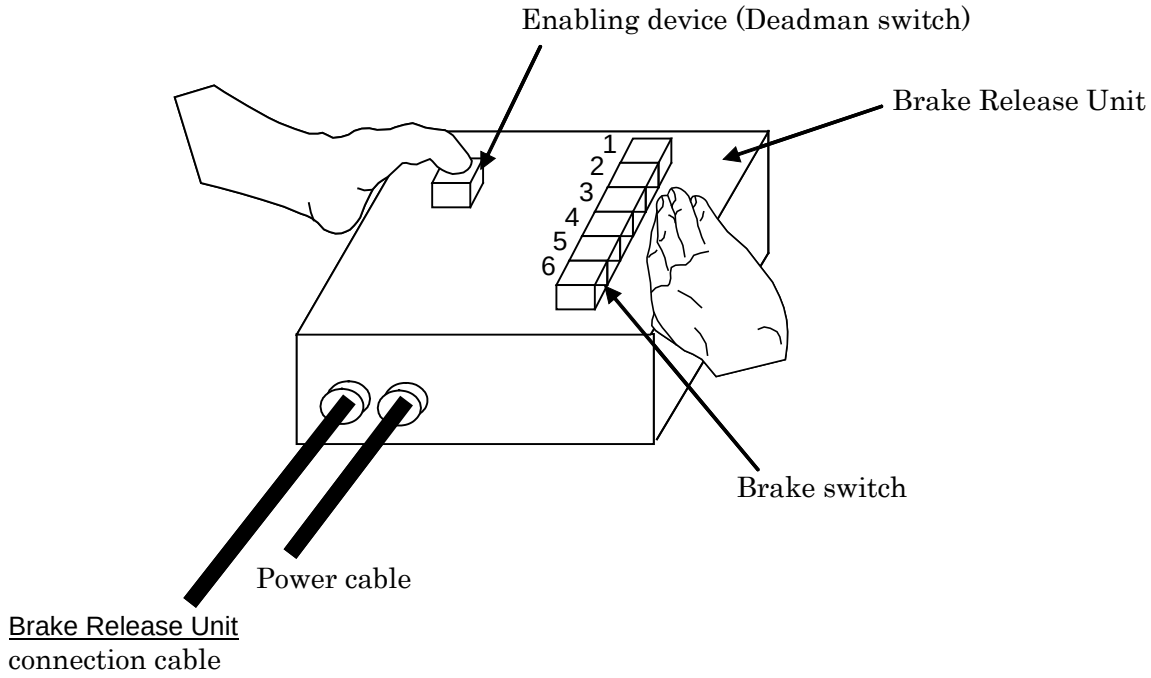

Fig.E.3.1 (a) Brake release unit

Table E.3.1 The relation between brake switch and robot axis

Robot Type	Brake Unit Button					
	1	2	3	4	5	6
Robot with R-30*i*B/R-30*i*B Plus (in case of 6 axis robot)	J1	J2	J3	J4	J5	J6
M-410*i*B (Integrated robot)	J1 to J4	-	-	-	-	-
In case of the auxiliary Axis	J1	-	-	-	-	-

- Refer to Fig.E.3.1 (c) for M-410*i*B (Integrated robot).
- Refer to Fig.E.3.2 for the auxiliary axis.

Except M-410*i*B (Integrated robot) and M-2000*i*A/1700L/2300

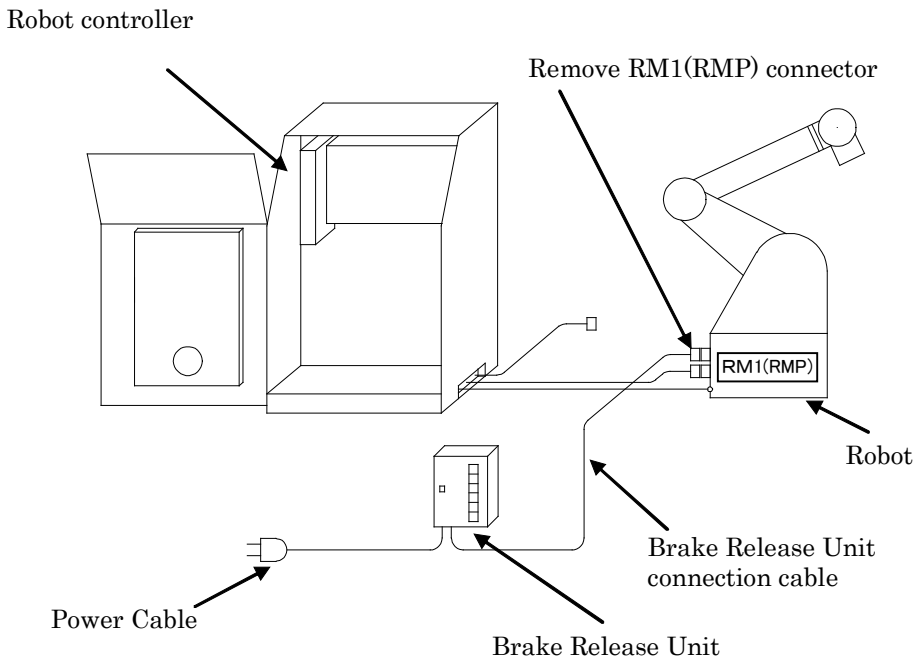

Fig.E.3.1 (b) How to connect brake release unit (In case of except M-410*i*B and M-2000*i*A/1700L/2300)

In case of M-410*i*B (Integrated robot)

Connect the Brake release unit connection cable to the servo motor brake connector. Only J1 switch is available.

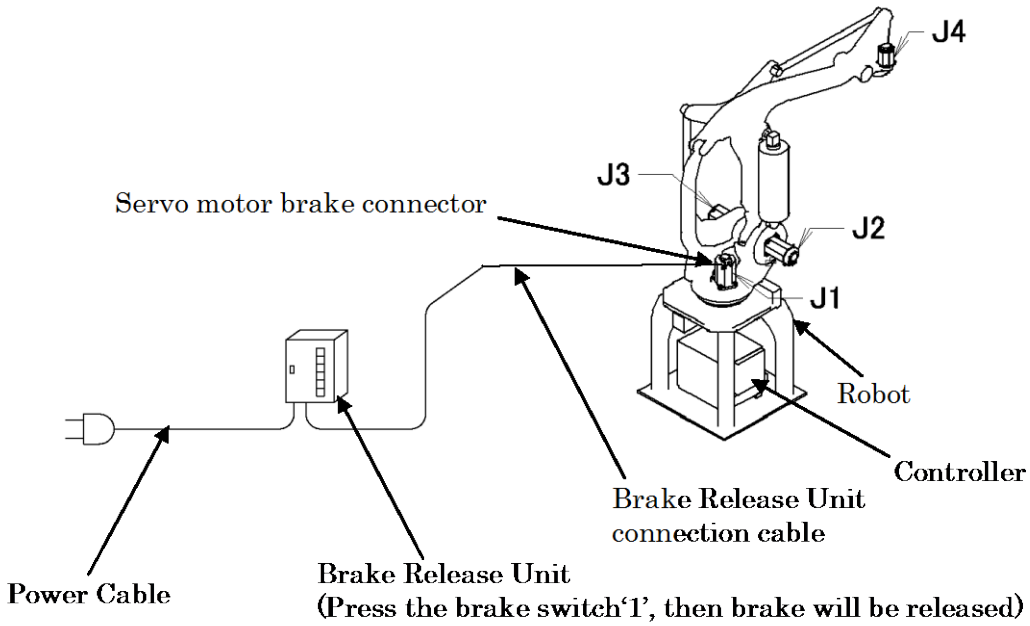

Fig.E.3.1 (c) How to connect brake release unit (In case of M-410*i*B)

In case of M-2000*i*A/1700L/2300

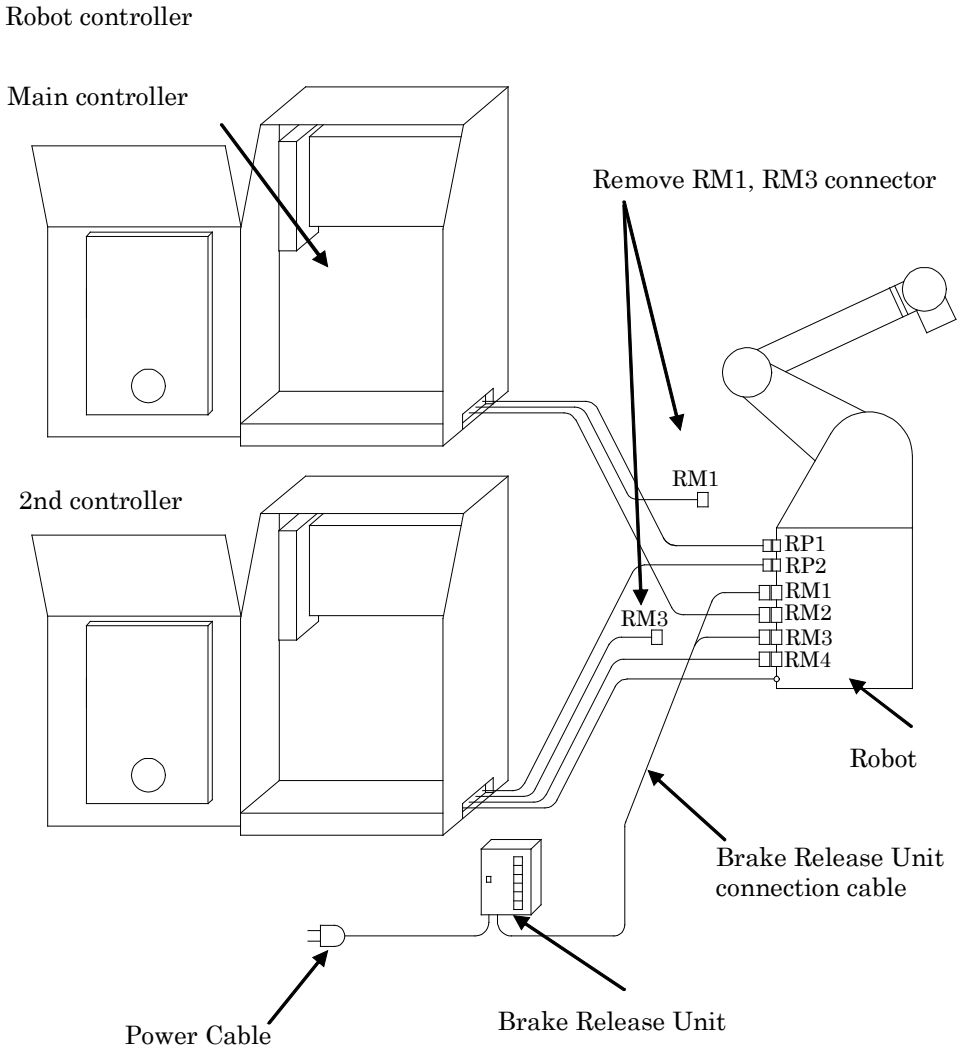

Fig.E.3.1 (d) How to connect brake release unit (In case of M-2000*i*A/1700L/2300)

E.3.2 Releasing the Brake of an Auxiliary Axis

Operate the brake release unit according to the following procedures.

(1) Support the auxiliary Axis by mechanical means to prevent it from falling down or rising up when the brake is released.
(2) Connect the Brake Release Unit connection cable to Brake Release Unit.
(3) Disconnect the aux. axis brake connector (CRR65A/B), and connect the CRR65A/B connector to the Brake Release Unit connection cable. Keep the connection of all cables of aux. axis motor (power, Pulsecoder, brake).
(4) Connect the power cable of Brake release unit to power supply.
(5) Press and hold the enabling device (the deadman switch) in the middle position.
(6) Press the brake switch‘1’, then brake will be released.

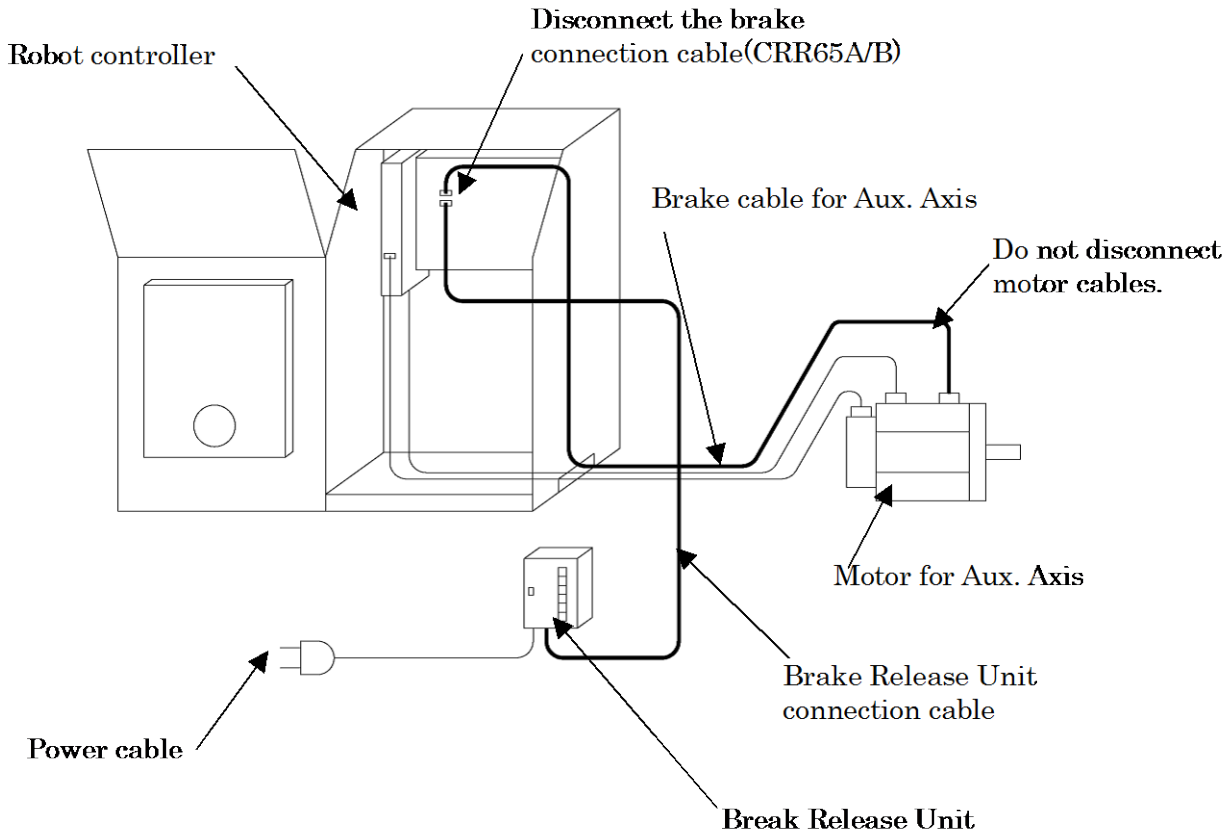

Fig.E.3.2(a) How to connect brake release unit (In case of operating to the Aux. Axis)

E.4 HOW TO CONNECT THE PLUG TO THE POWER CABLE (IN CASE OF NO POWER PLUG)

Connect the plug to the power cable as follows. This plug is provided by customer.

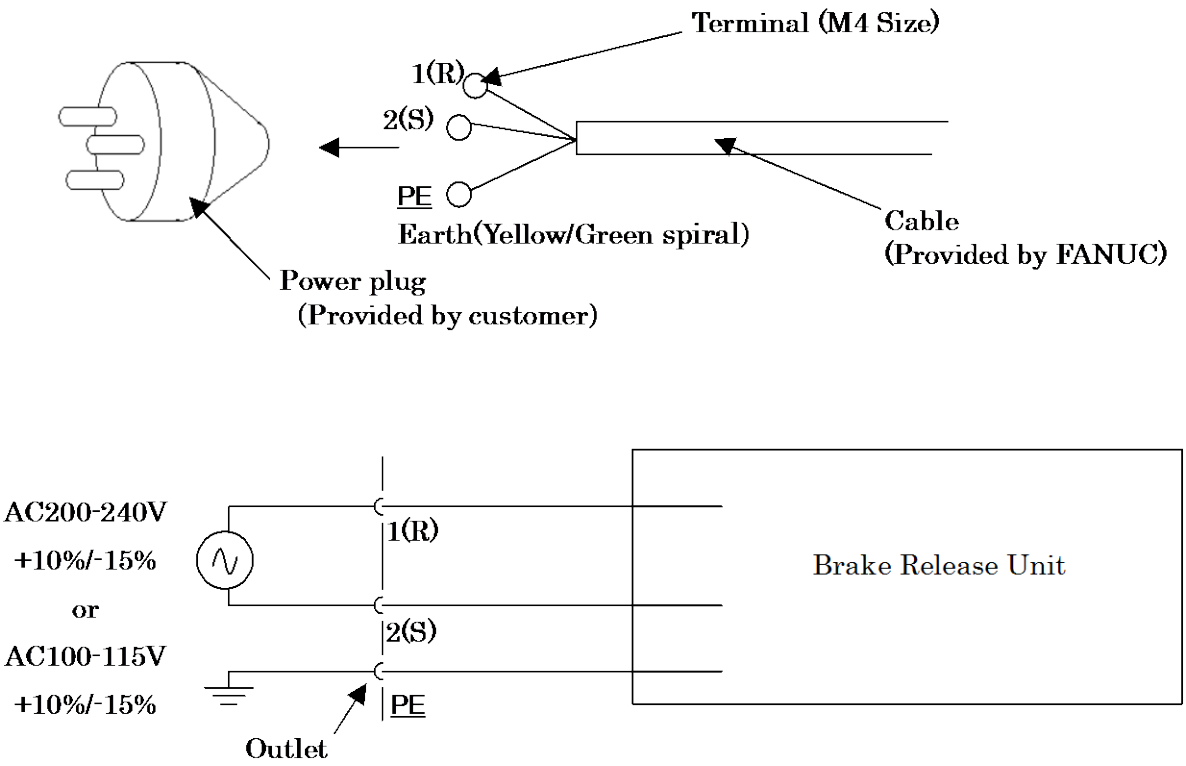

Fig.E.4(a) How to connect the plug to the power cable

> ⚠ **WARNING**
> - Only a specialist having the relevant expertise knowledge is permitted to connect the plug to the power cable.
> - In the EU area, only plug complying with the relevant European product standard can be used.
> - Do not install the plugs without protective earth ground pin.

E.5 DIMENSION

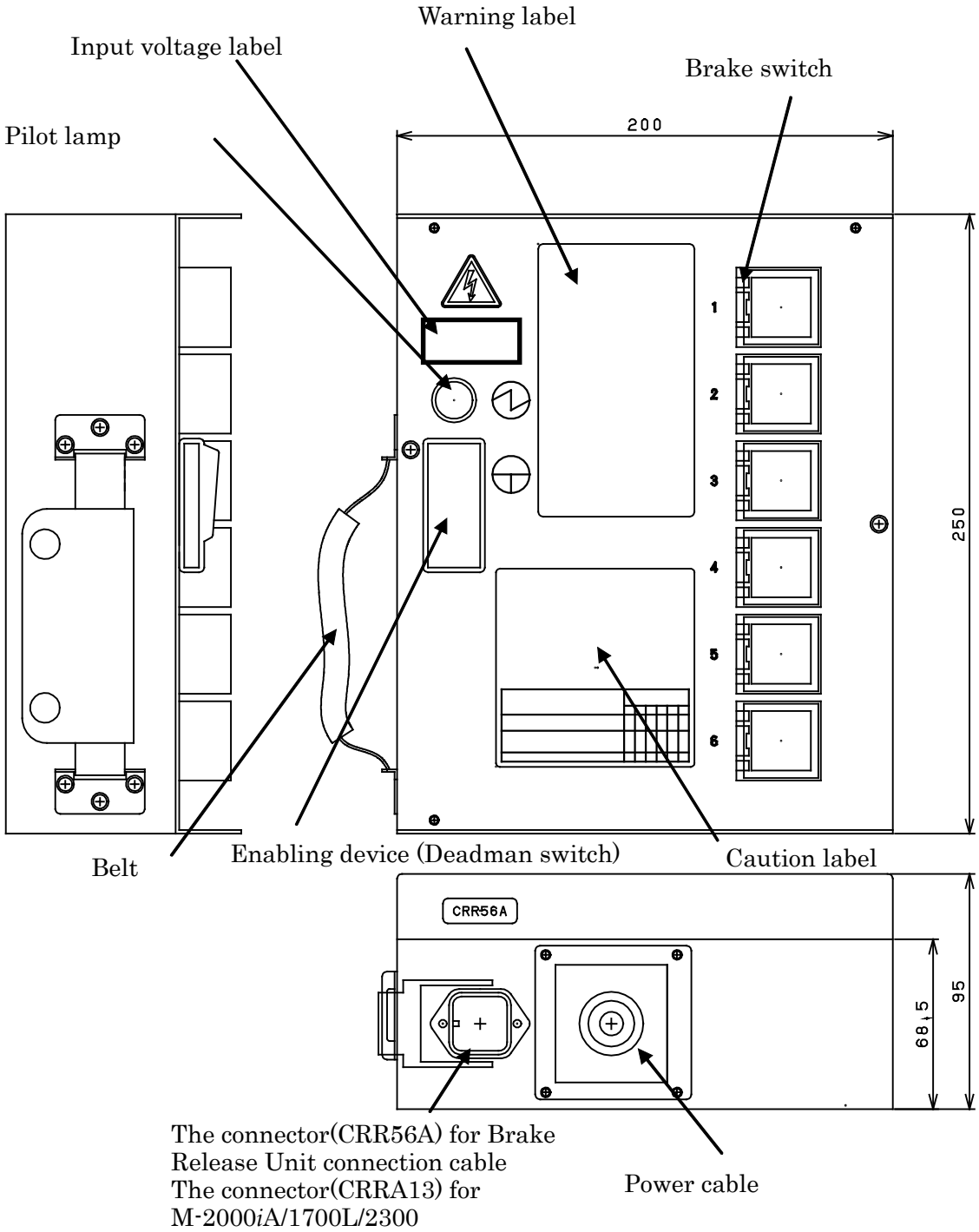

Fig.E.5 (a) Dimension of brake release unit (Front view)

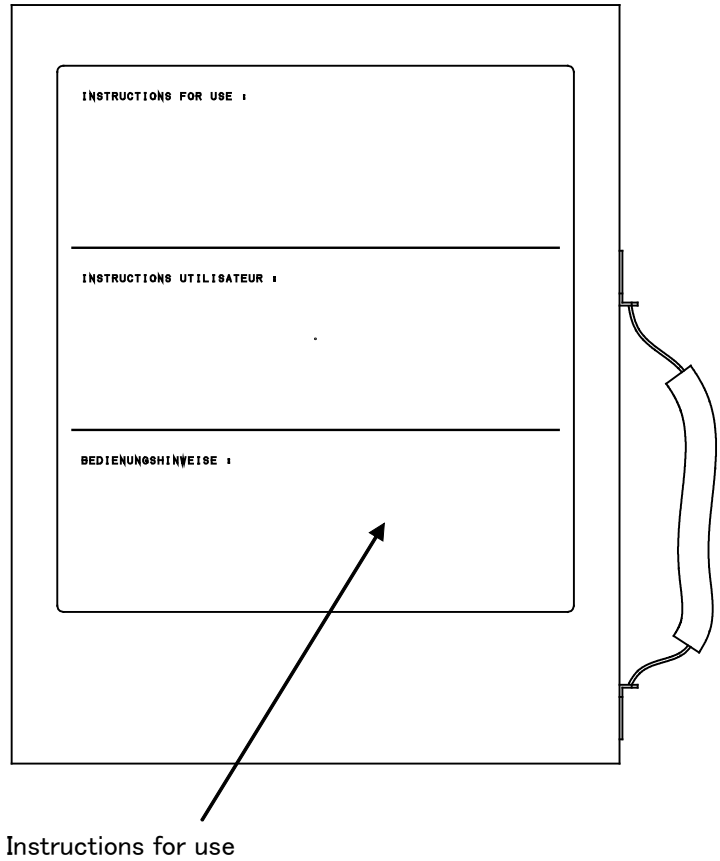

Fig.E.5 (b) Dimension of brake release unit (Rear view)

E.6 FUSE

The fuses are mounted inside this unit. Please check the fuse when the pilot lamp doesn't light even if enabling device (deadman switch) is pressed. When the fuse is blown, exchange the fuse after finding the root cause of failure, and taking the appropriate countermeasures.

Manufacturer: Daito Communication Co.
Specification: P420H
Rating: 2A

> ⚠ **WARNING**
> When the fuse is replaced, the power cable of brake release unit must be disconnected.

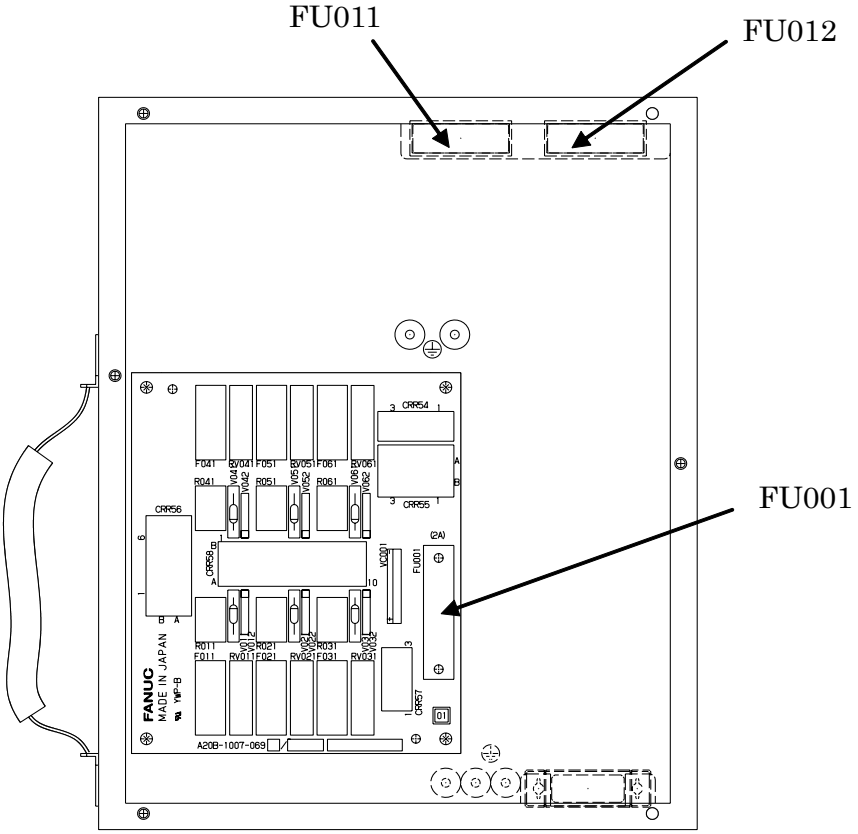

Fig.E.6(a) The location of fuses

E.7 SPECIFICATIONS

Input power supply

AC100-115V, 50/60Hz±1Hz, single phase, +10%/-15%, 1A
AC200-240V, 50/60Hz±1Hz, single phase, +10%/-15%, 1A

Weight

Brake Release Unit (AC 100V): 2.3 kg
Brake Release Unit (AC 200V): 3.5 kg

F HOW TO SECURE THE COMPACT FLASH MEMORY CARD TO THE MAIN BOARD

An optional bracket (fixing plate) can be used along with an adapter to semi-permanently secure the compact flash memory card (CF card) to the main board. The CF card can then be used whenever it is necessary to perform a back-up.

Parts
- Fixing plate (Ordering number A05B-2500-J300)
- Adapter for CF card (made by FANUC) (Ordering number A02B-0303-K150)

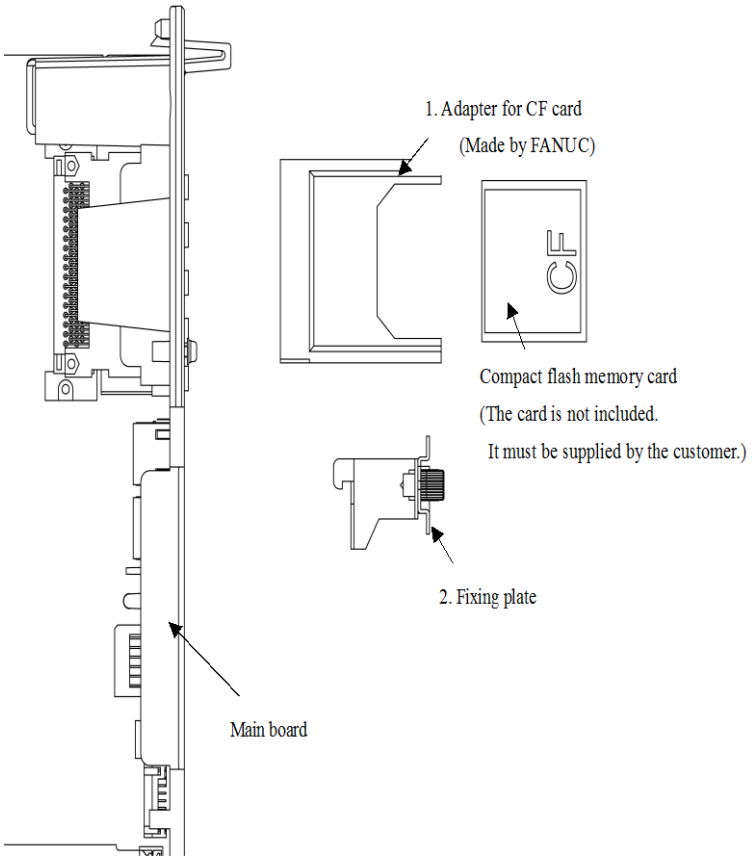

- Installation of the CF card

1. Insert the CF card into the Adapter.

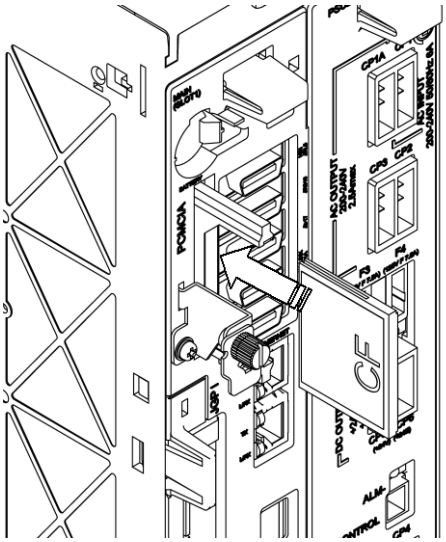

2. Lock the latch, and drive the screw.

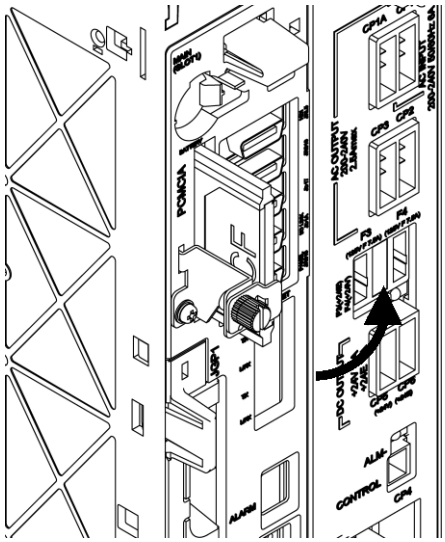

- Removal of the CF card

1. Loosen the screw, and unlock the latch.

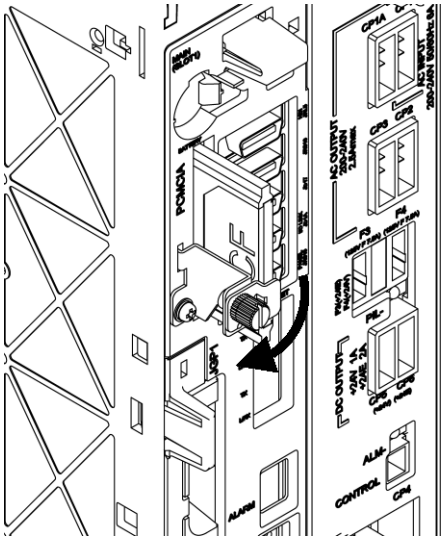

2. Pull the CF card out of the Adapter.

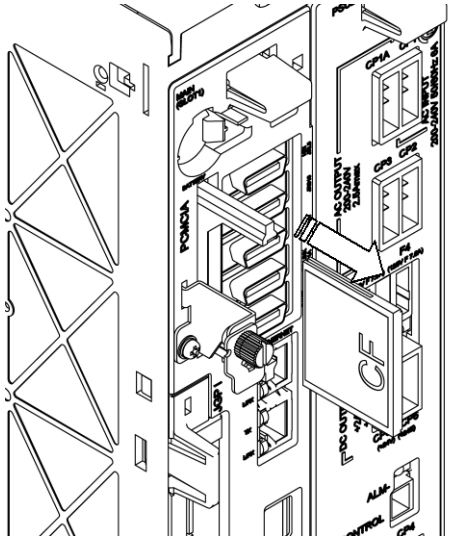

G THE CONTROLLER FOR M-900*i*A/200P, M-2000*i*A

Additional document of the controller specifically for the M-900*i*A/200P, M-2000*i*A.

G.1 CONFIGURATION

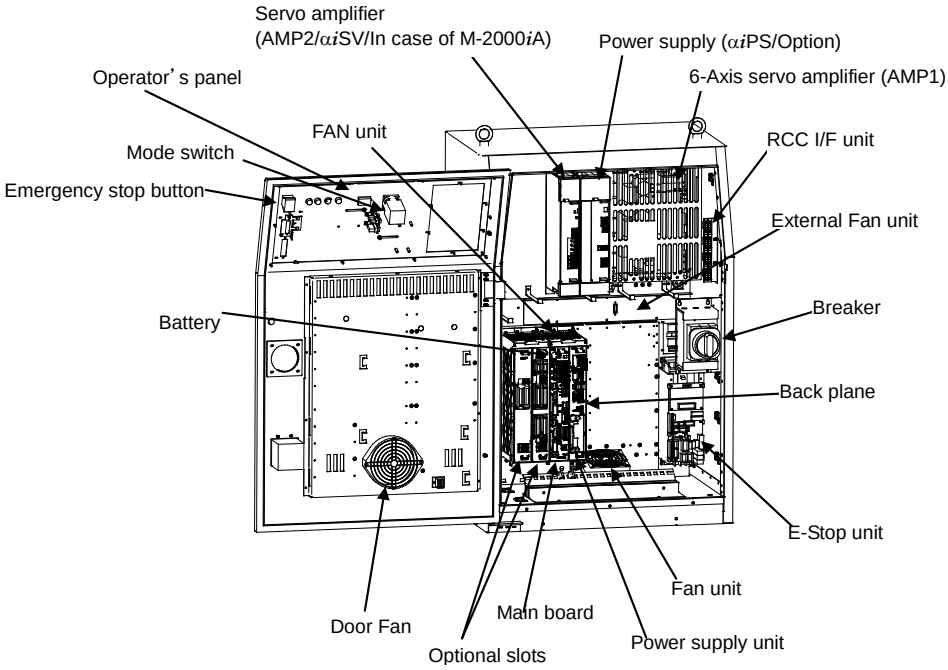

(Controller 1)

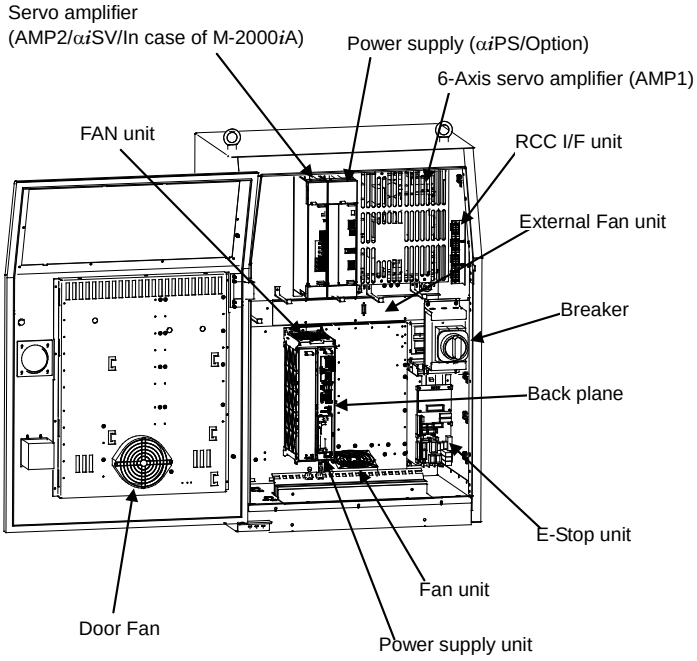

(Controller 2)

Fig.G.1(a) M-900*i*A/200P, M-2000*i*A CONTROLLER (B-cabinet)

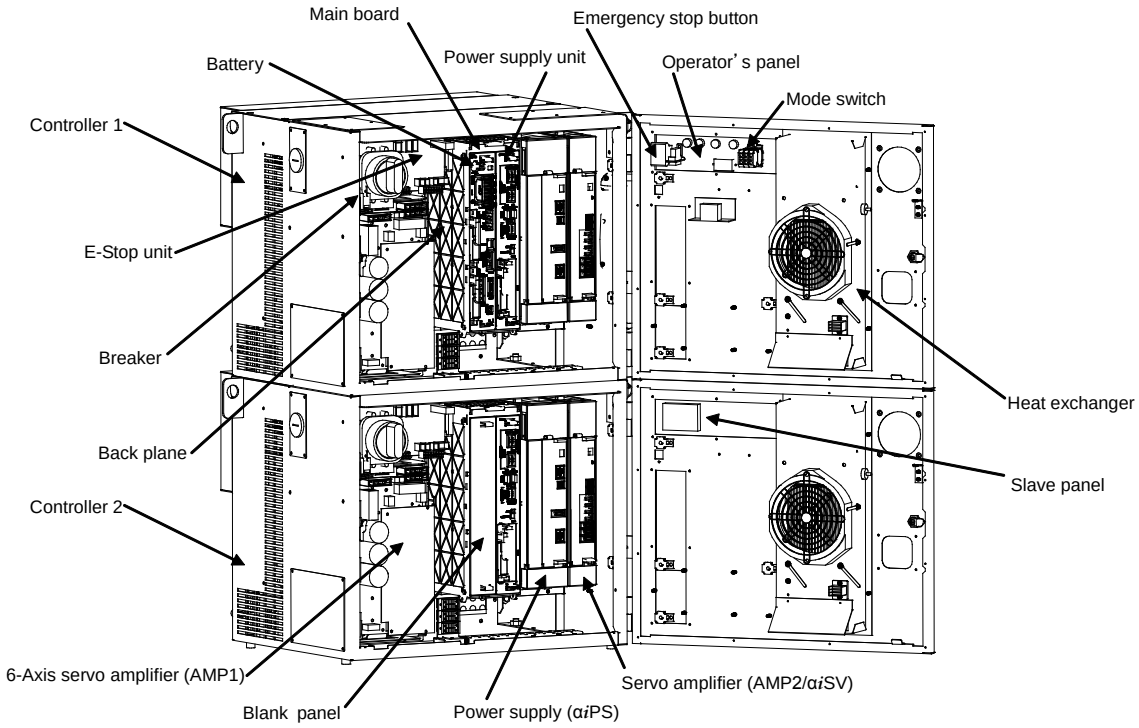

Fig.G.1(b) M-2000*i*A, CONTROLLER (A-cabinet)

G.2 TROUBLESHOOTING USING THE ALARM CODE

G.2.1 Troubleshooting Using the Alarm Code

SRVO-101 Robot overtravel (Group:i)

(Explanation) The robot has moved beyond a hardware limit switch on the axes.
(Action) Take the same actions as SRVO-005.

> **NOTE**
> It is factory-placed in the overtravel state for packing purposes.
> If the Overtravel signal is not in use, it may have been disabled by short-circuiting in the mechanical unit.

SRVO-102 Hand broken (Group:i)

(Explanation) The safety joint (if in use) might have been broken. Alternatively, the HBK signal on the robot connection cable might be a ground fault or a cable disconnection.
(Action) Take the same actions as SRVO-006.

> **NOTE**
> If the Hand broken signal is not in use, it can be disabled by software setting.
> Refer to Subsection 5.5.3 How to Disable/Enable HBK in Part III, "CONNECTIONS" of "Maintenance Manual" to disable the Hand broken signal.

SRVO-103 Pneumatic pressure abnormal (Group:i)

(Explanation) An abnormal air pressure was detected. The input signal is located on the EE interface of the robot. Refer to the manual of your robot.
(Action) Take the same actions as SRVO-009.

SRVO-106 Door open or E-stop (Robot:i)

(Explanation) The cabinet door is open.
- When the door switch is mounted.

(Action) Take the same actions as SRVO-105

SRVO-244 Chain 1 (+24V) abnormal (Robot:i)
SRVO-245 Chain 2 (0V) abnormal (Robot:i)

(Explanation) A mismatch occurred between duplicate safety signals.
SRVO-244 is issued if such a mismatch that a contact connected on the chain 1 side (between EES1 and EES11, between EAS1 and EAS11, between EGS1 and EGS11, and so forth) is closed, and a contact on the chain 2 side (between EES2 and EES21, between EAS2 and EAS21, 7between EGS2 and EGS21, and so forth) is open occurs.
SRVO-245 is issued if such a mismatch that a contact on the chain 1 side is open, and a contact on the chain 2 sides is closed occurs.
If a chain error is detected, correct the cause of the alarm then reset the alarm according to the method described later.
(Action) Take the same actions as SRVO-230, 231.

> ⚠ **WARNING**
> If this alarm is issued, do not reset the chain error alarm until the failure is identified and repaired. If robot use is continued with one of the duplicate circuits being faulty, safety may not be guaranteed when the other circuit fails.

> ⚠ **CAUTION**
> 1 The state of this alarm is preserved by software. After correcting the cause of the alarm, reset the chain error alarm according to the chain error reset procedure described later.
> 2 Until a chain error is reset, no ordinary reset operation must be performed. If an ordinary reset operation is performed before chain error resetting, the message "SRVO-237 Chain error cannot be reset" is displayed on the teach pendant.

SRVO-301 Hand broken/HBK dsbl (Group:i)
SRVO-303 Set HBK to ENABLE (Group:i)

(Explanation) Although HBK was disabled, the HBK signal was input.
(Action) Take the same actions as SRVO-300, 302.

G.2.2 Alarms Detected by Servo Amplifier

The following alarms are detected by servo amplifier.
If the alarms in the following table are caused, find the controller, which the alarm is caused according to the table of relationship of axis. (G.2.3)
And find the cause and take an appropriate measure according to the troubleshooting in MAINTENANCE PART Chapter 3.
Note) Axis: j corresponds to the axis display on the teach pendant.

Table G.2.2 Alarms detected by servo amplifier

Alarm
SRVO - 018 Brake abnormal (Group:i Axis:j)
SRVO - 043 DCAL alarm (Group:i Axis:j)
SRVO - 044 DCHVAL alarm (Group:i Axis:j)
SRVO - 047 LVAL alarm (Group:i Axis:j)
SRVO - 049 OHAL1 alarm (Group:i Axis:j)
SRVO - 136 DCLVAL alarm (Group:i Axis:j)

G.2.3 Relationship of Axis

The following table is shown the relation ship of each axes (Axis (j) displayed in the teach pendant, motor number, Controller, Connector of Amplifier) for M-900*i*A/200P, M-2000*i*A
If the alarm is occurred, find the motor number, the connector of Amplifier and the controller (which the alarm is caused) according to the relationship of the axis and the alarm displayed in the teach pendant (Axis (j)), and find the cause of alarm according to the trouble shooing.

ALARM displayed in the teach pendant.

SRVO - *** ALARM (Group:i Axis:j)

Table G.2.3 (a) Relation of axis (In case of M-900*i*A/200P)

	Axis (j)	Motor number	Controller	Connector of AMP
M-900*i*A/200P Without Aux. Axis AMP	1	J1A	CONTROLLER 2	6 axis amplifier (AMP1): CNJ1
	2	J2	CONTROLLER 2	6 axis amplifier (AMP1): CNJ2
	3	J3	CONTROLLER 1	6 axis amplifier (AMP1): CNJ2
	4	J4	CONTROLLER 2	6 axis amplifier (AMP1): CNJ4
	5	J5	CONTROLLER 2	6 axis amplifier (AMP1): CNJ5
	6	J6	CONTROLLER 1	6 axis amplifier (AMP1): CNJ3
	7	J1B	CONTROLLER 1	6 axis amplifier (AMP1): CNJ1
M-900*i*A/200P In case of 1 Aux. Axis amplifier	1	J1A	CONTROLLER 2	6 axis amplifier (AMP1): CNJ1
	2	J2	CONTROLLER 2	6 axis amplifier (AMP1): CNJ2
	3	J3	CONTROLLER 1	6 axis amplifier (AMP1): CNJ2
	4	J4	CONTROLLER 2	6 axis amplifier (AMP1): CNJ4
	5	J5	CONTROLLER 2	6 axis amplifier (AMP1): CNJ5
	6	J6	CONTROLLER 1	6 axis amplifier (AMP1): CNJ3
	7	J7 (Aux. axis)	CONTROLLER 1	6 axis amplifier (AMP1): CNJ4
	8	J1B	CONTROLLER 1	6 axis amplifier (AMP1): CNJ1

Table G.2.3 (b) Relation of axis (In case of M-2000*i*A)

	Axis (j)	Motor number	Controller	Connector of AMP
M-2000*i*A No Aux. Axis AMP	1	J1	CONTROLLER 1	6 axis amplifier (AMP1): CNJ1
	2	J2A	CONTROLLER 1	6 axis amplifier (AMP1): CNJ2
	3	J3A	CONTROLLER 1	6 axis amplifier (AMP1): CNJ3
	4	J4	CONTROLLER 1	Aux. axis amplifier (AMP2): CNJ1
	5	J5	CONTROLLER 2	6 axis amplifier (AMP1): CNJ1
	6	J6	CONTROLLER 2	Aux. axis amplifier (AMP2): CNJ1
	7	J2B	CONTROLLER 2	6 axis amplifier (AMP1): CNJ2
	8	J3B	CONTROLLER 2	6 axis amplifier (AMP1): CNJ3

Note) J1A and J1B show the tandem axis.

G.3 INSTALLING THE CONNECTION CABLE BETWEEN CABINETS

The connection cable between cabinets (emergency stop cable, optical cable, and earth cable) is disconnected from the controller 1 at shipment.
Install the connection cable between cabinets as shown in the following Fig. G.3 .

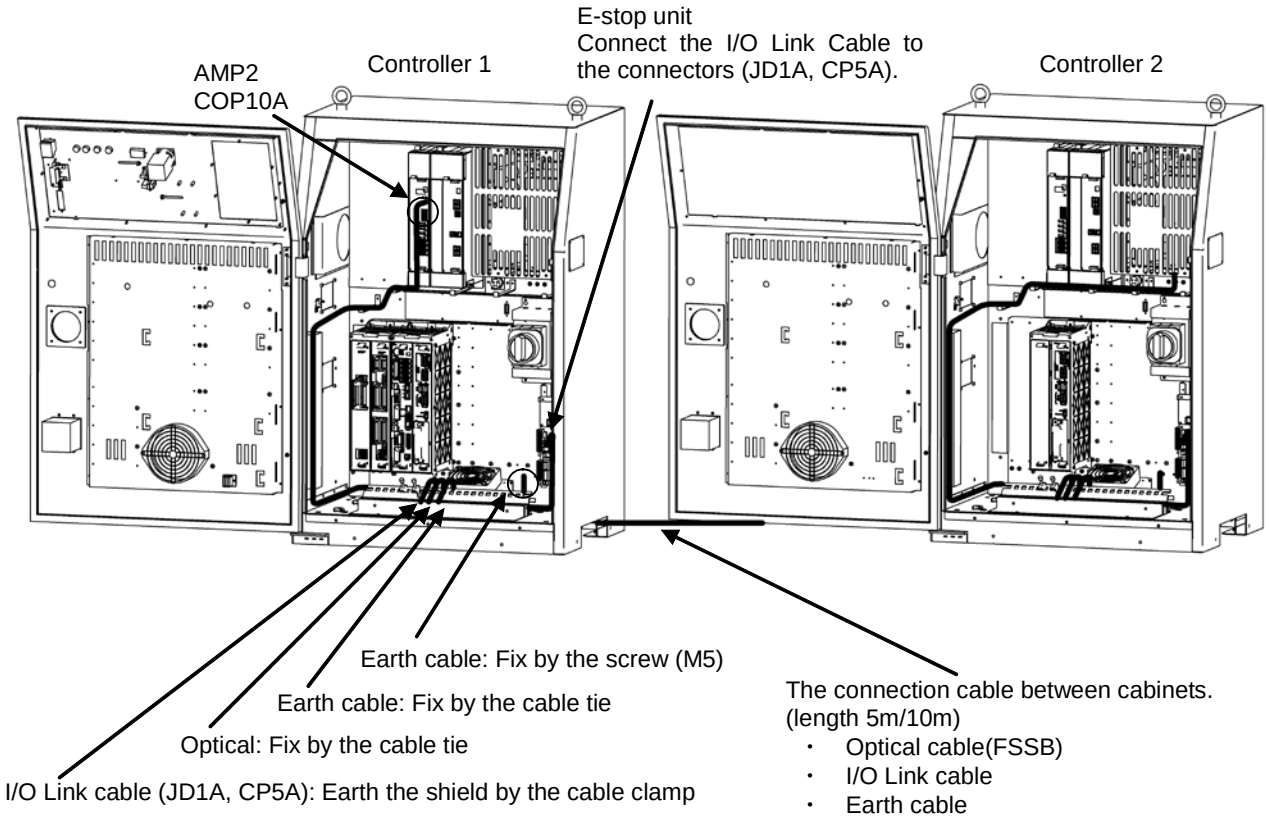

Fig.G.3(a) Installing the connection cable between cabinets

G.4 ROBOT CONNECTION CABLE

Following is the installation method of robot connection cable for M-900*i*A/200P, M-2000*i*A at installing. Cable route shown in CONNECTION PART Section 3.2.1.

There are two types of the robot connection cable;
Non-flex type: usage is restricted to fixed laying
Flex type: possible to use in the cable carrier

Table G.4 Specification of cable

	Robot	Non-flex type			Flex type		
		Diameter (mm)	Weight (kg/m)	Minimum bending radius (mm)	Diameter (mm)	Weight (kg/m)	Minimum bending radius (mm)
RP1,2	Group9 (M-900*i*A/200P)	16.0	0.45	200	-	-	-
RM1,2,3,4		26.1	1.22	200	-	-	-
RP1, 2	Group10 (M-2000*i*A)	16.0	0.45	200	20.5	0.71	200
RM1,2,3,4		26.1	1.22	200	25.4	1.2	200
EARTH	All models	4.7	0.065	200	4.7	0.065	200

⚠ **CAUTION**
Before operating the robot, uncoil the interconnection cables from their shipping position to prevent excessive heat, which may damage the cables.
(Coiled part should be shorter than 10 meter.)

- Detail of cable connection to servo amplifier

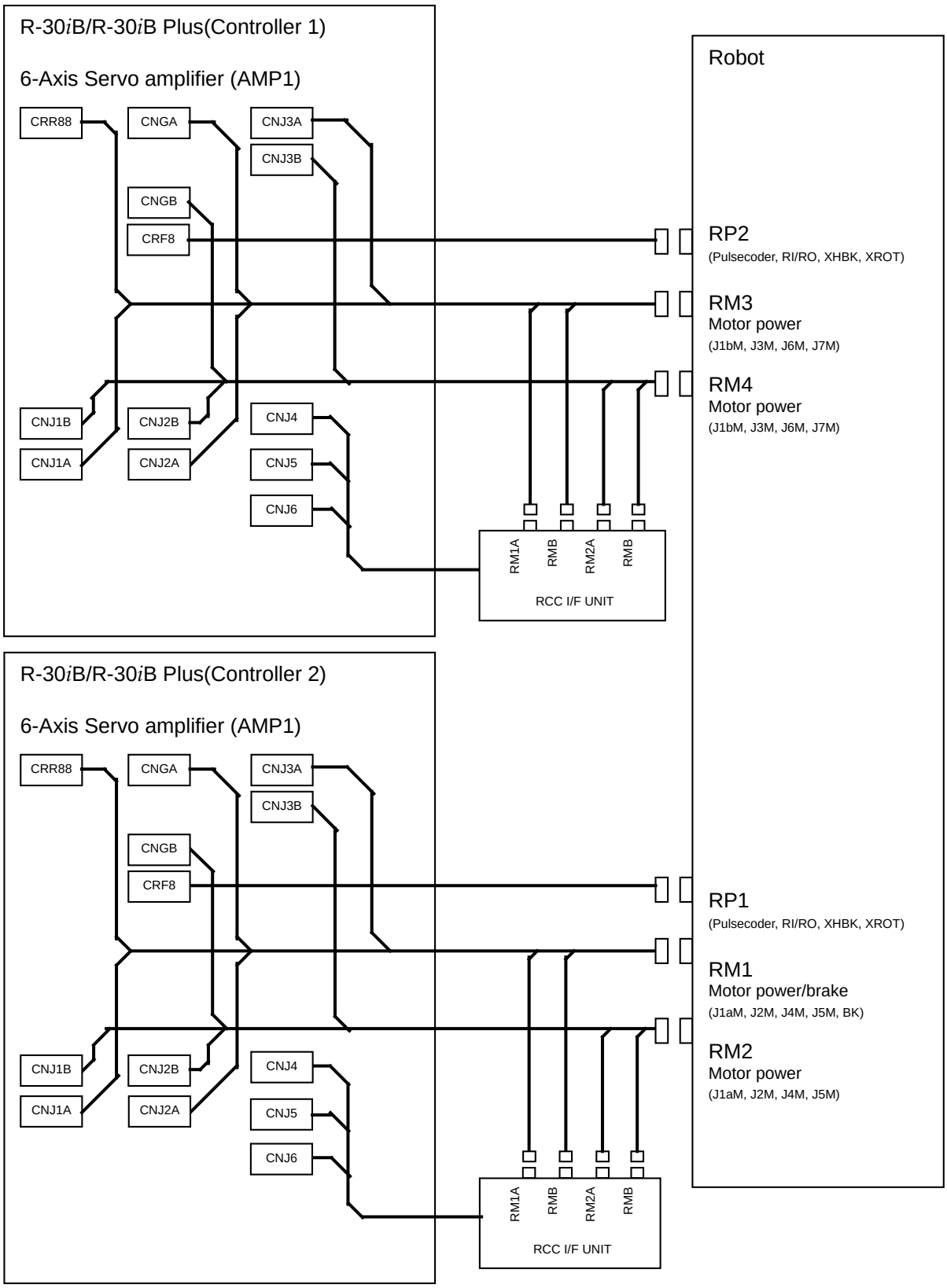

Fig.G.4 (a) Robot connection cable(Group9: M-900*i*A/200P)

- Detail of cable connection to servo amplifier

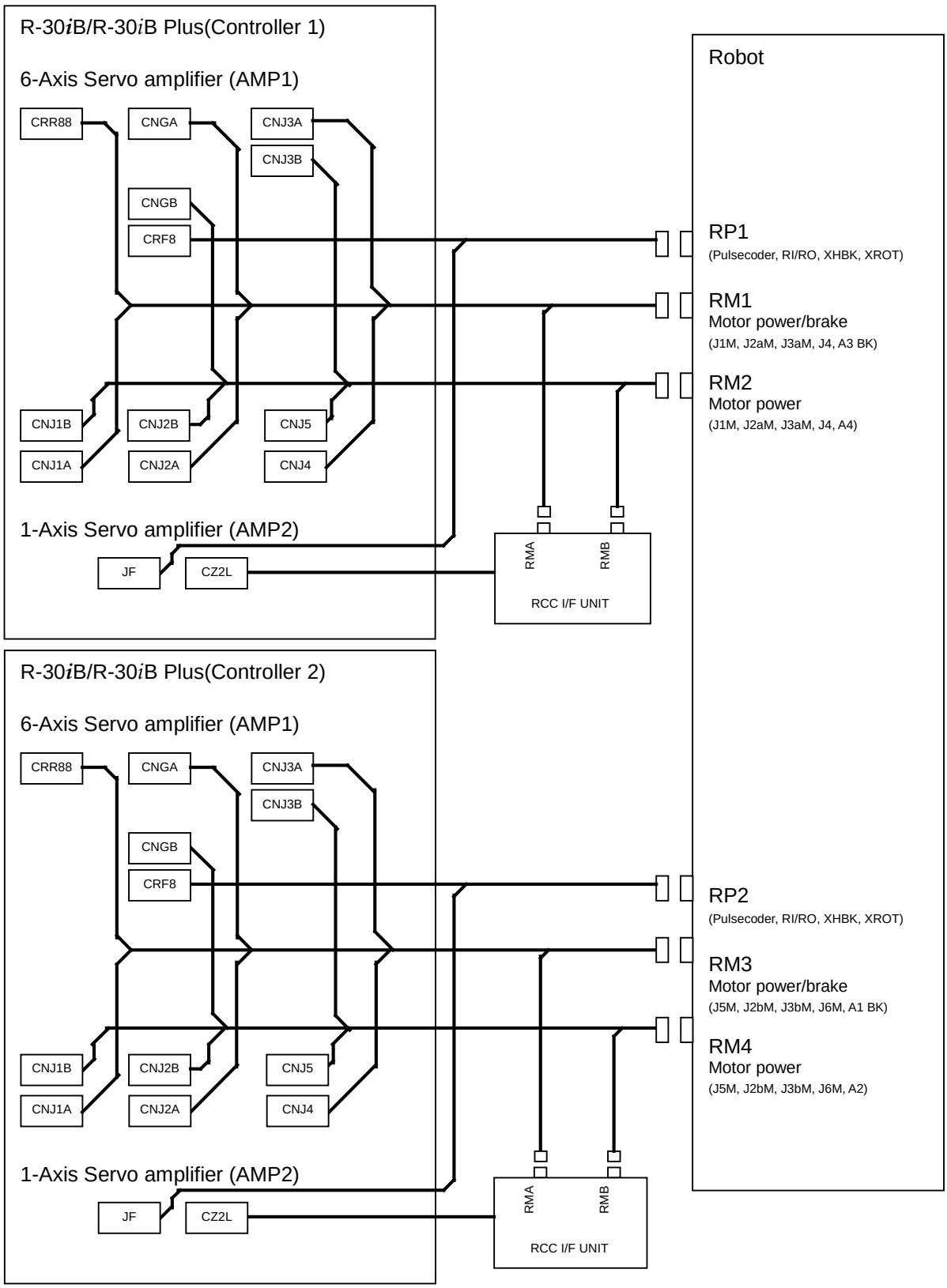

Fig.G.4(b) Robot connection cable (Group10: M-2000iA)

G.5 CONNECTING THE INPUT POWER CABLE

M-900*i*A/200P, M-2000*i*A is composed of two cabinets, and need to connect the power supply with each main breaker as shown in figure G.5.
Refer to CONNECTION PART Chapter 3.2 for the method of connecting the power supply with each main breaker.

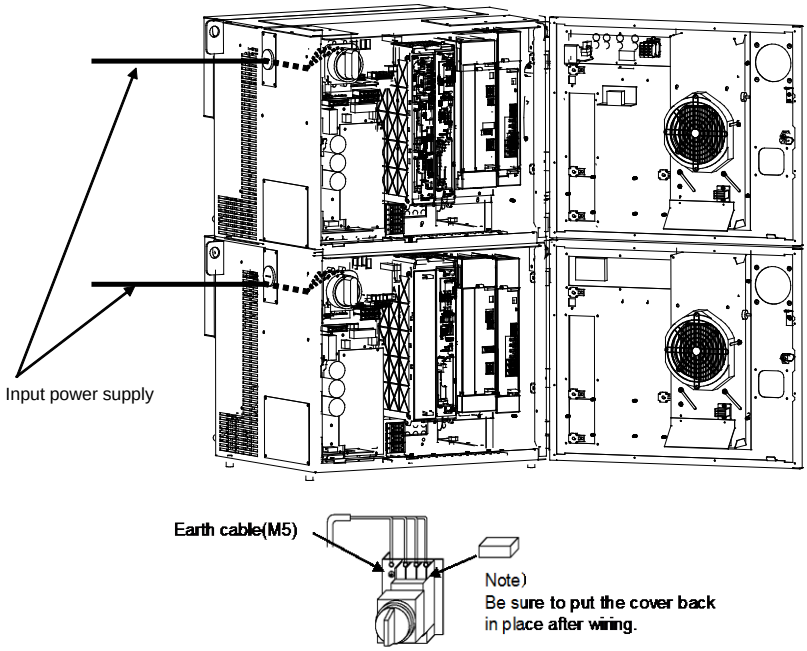

Fig.G.5(a) In case of A-cabinet

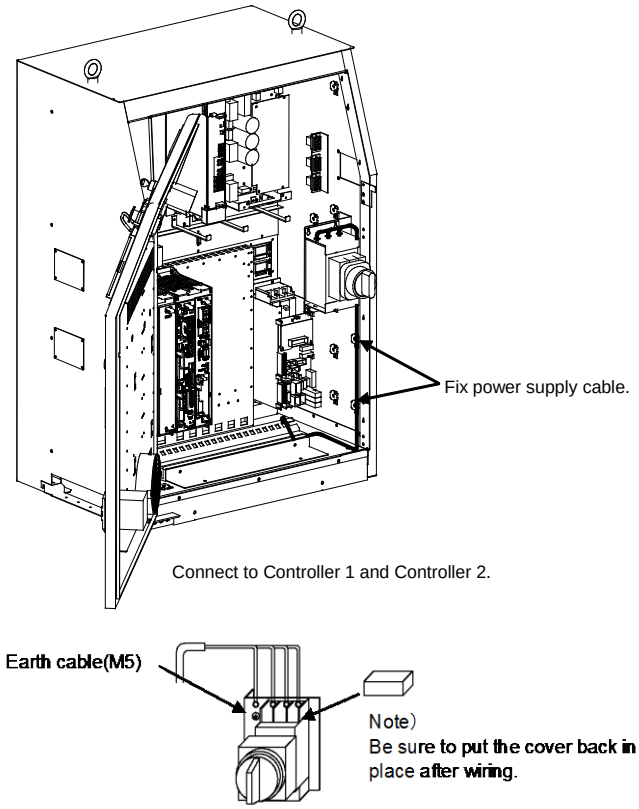

Fig.G.5(b) In case of B-cabinet

G.6 CONFIRMATIONS OF ON/OFF BY THE BREAKER FOR M-900*i*A/200P, M-2000*i*A

(1) In case of turn on, turn on the MAIN MACHINE DISCONNECT-2 (Breaker of Controller 2) first, and then turn on the MAIN MACHINE DISCONNECT-1 (Breaker of Controller 1). Or turn on both controllers at the same time.
(2) In case of turn off, turn off the MAIN MACHINE DISCONNECT-1 (Breaker of Controller 1) first, and then turn off the MAIN MACHINE DISCONNECT-2 (Breaker of Controller 2). Or turn off both controllers at the same time.

> ⚠ **WARNING**
> Turn off both MAIN MACHINE DISCONNECT-1 and MAIN MACHINE DISCONNECT-2 before servicing.

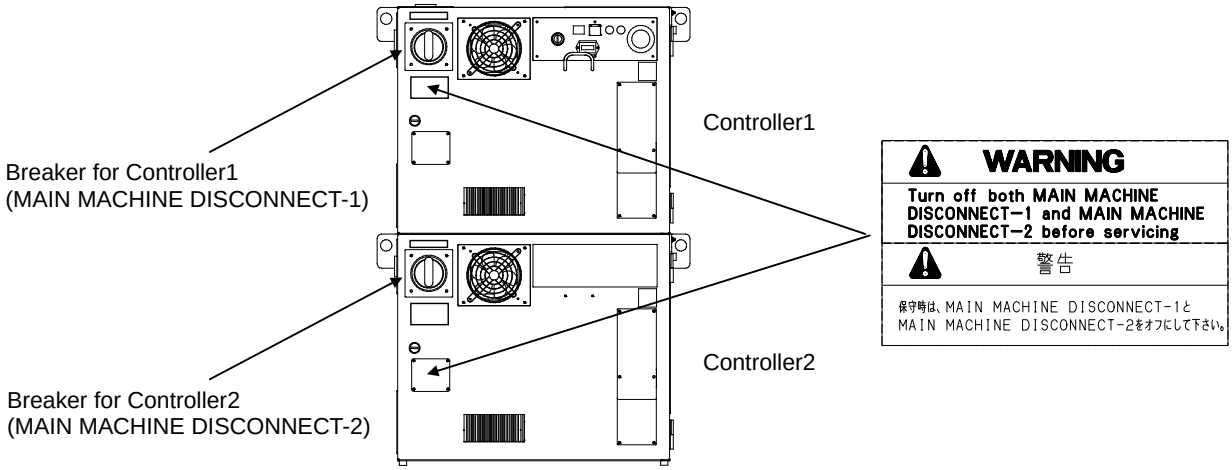

Fig.G.6(a) In case of A-cabinet

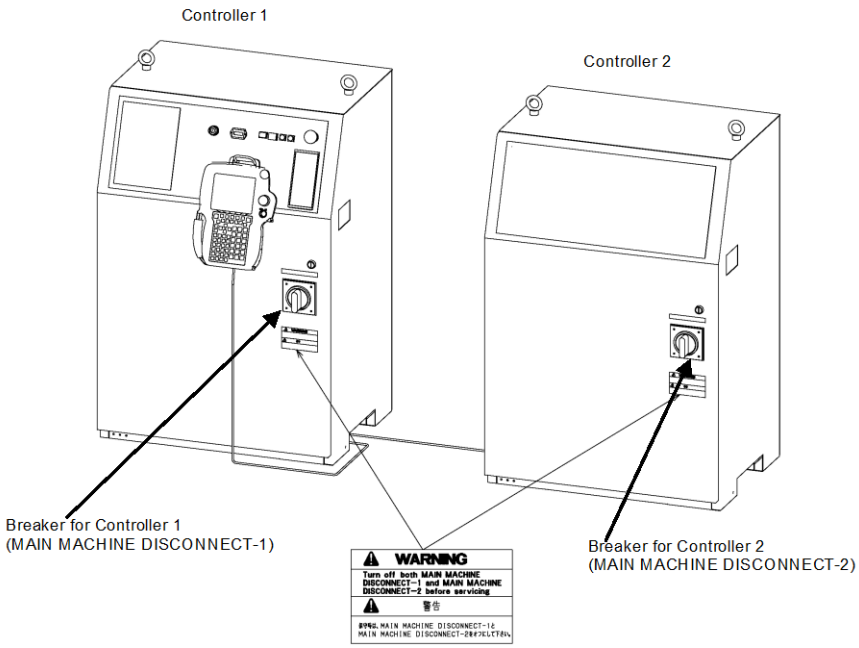

Fig.G.6(b) In case of B-cabinet

G.7 CONNECTING THE EXTERNAL EMERGENCY STOP

M-900*i*A/200P, M-2000*i*A is composed of two cabinets, and connect the safety signals such as external emergency stop signal or safety fence signal to the master controller as shown in figure G.7. It will not be an emergency stop even if connected to the salve controller.
Refer to CONNECTION PART Chapter 3.3.5 for connecting the external emergency stop.

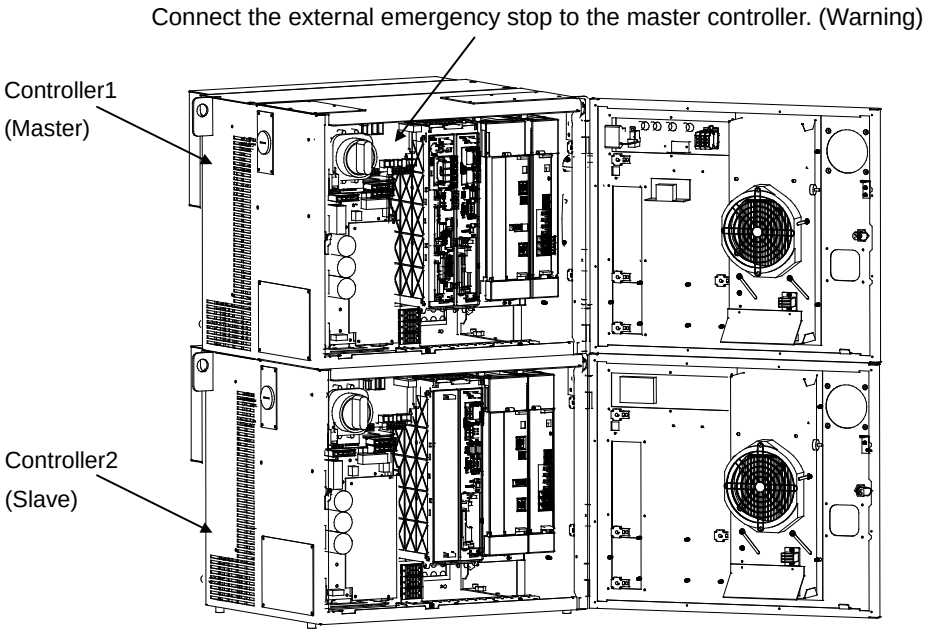

Fig.G.7(a) In case of A-cabinet

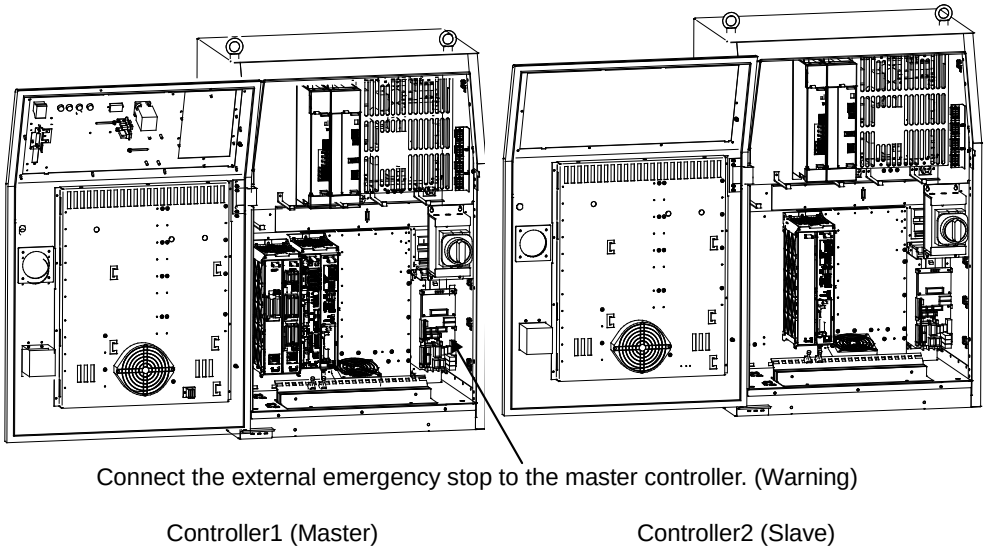

Fig.G.7(b) In case of B-cabinet

> ⚠ **WARNING**
> Make sure that connect the external emergency stop to the master controller.

G.8 CONNECTING ADDITIONAL SAFETY I/O BOARD

M-900*i*A/200P, M-2000*i*A is composed of two cabinets, and connect the additional safety I/O board to the master controller as shown in figure G.8.

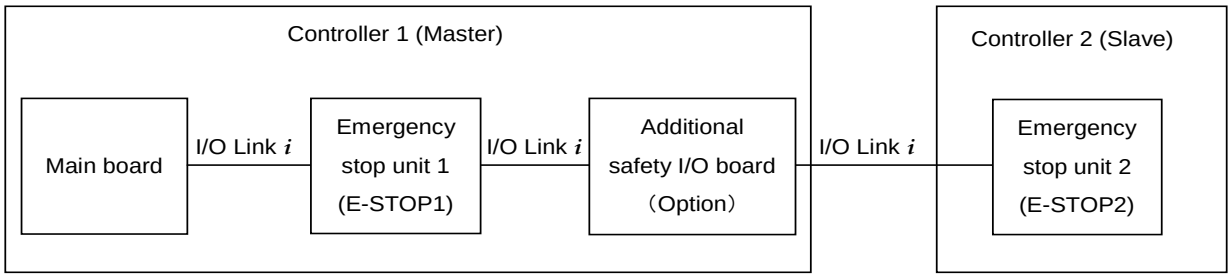

図 G.8(a) Connecting additional safety I/O board

G.9 TOTAL CONNECTION DIAGRAM

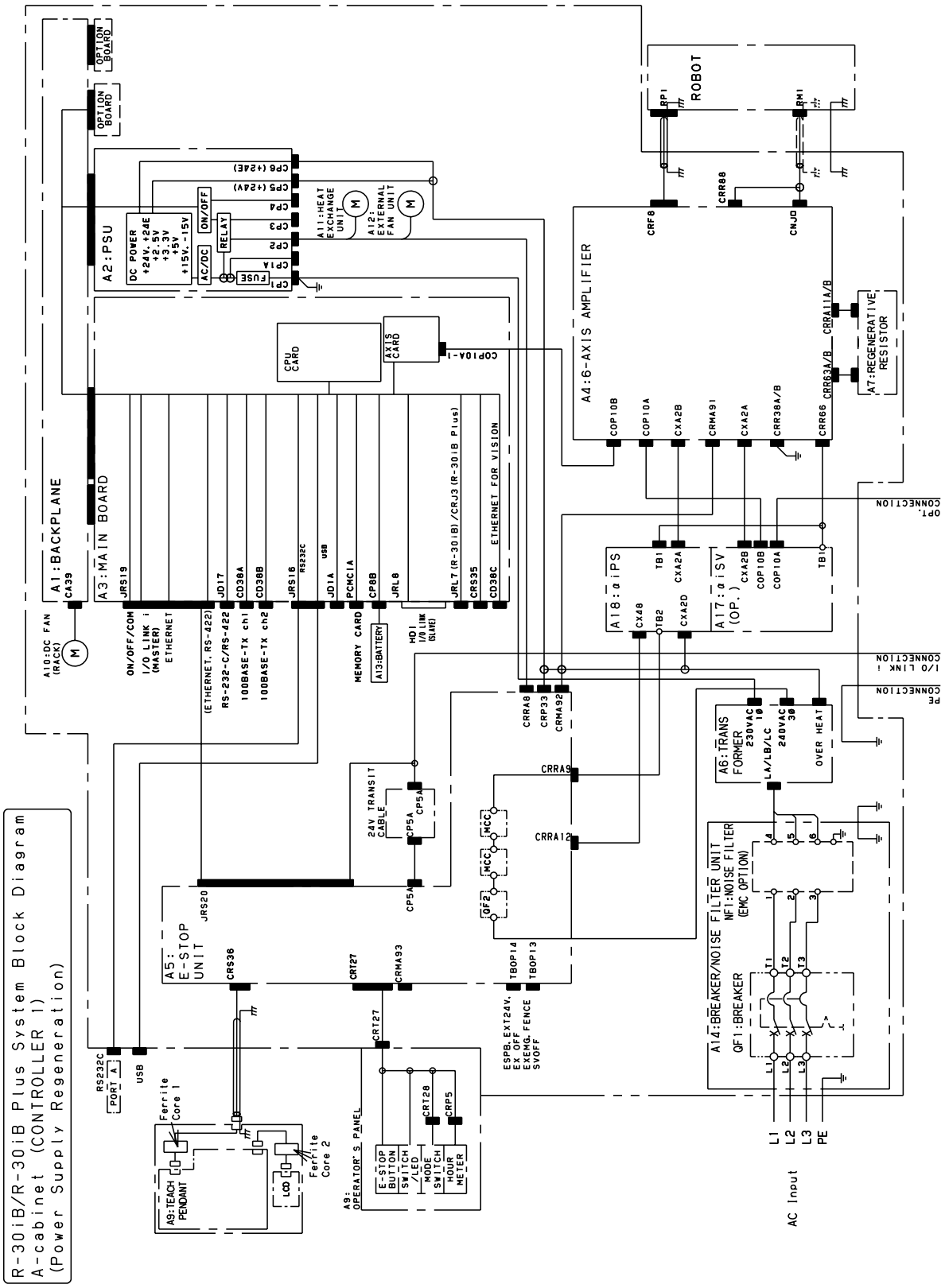

Fig.G.9(a) System block diagram (A-cabinet/Power supply regeneration/Controller 1)

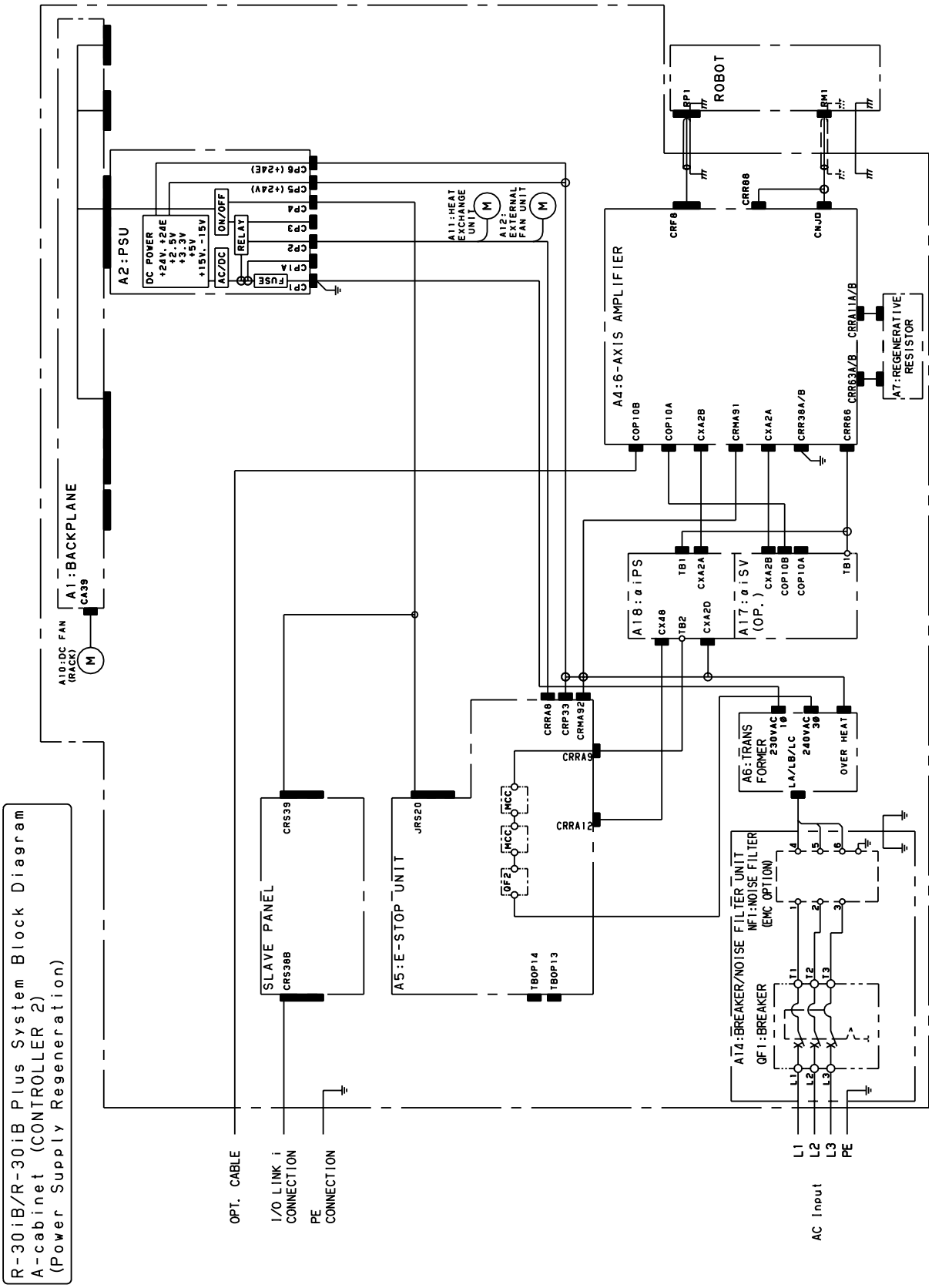

Fig.G.9(b) System block diagram (A-cabinet/Power supply regeneration/Controller 2)

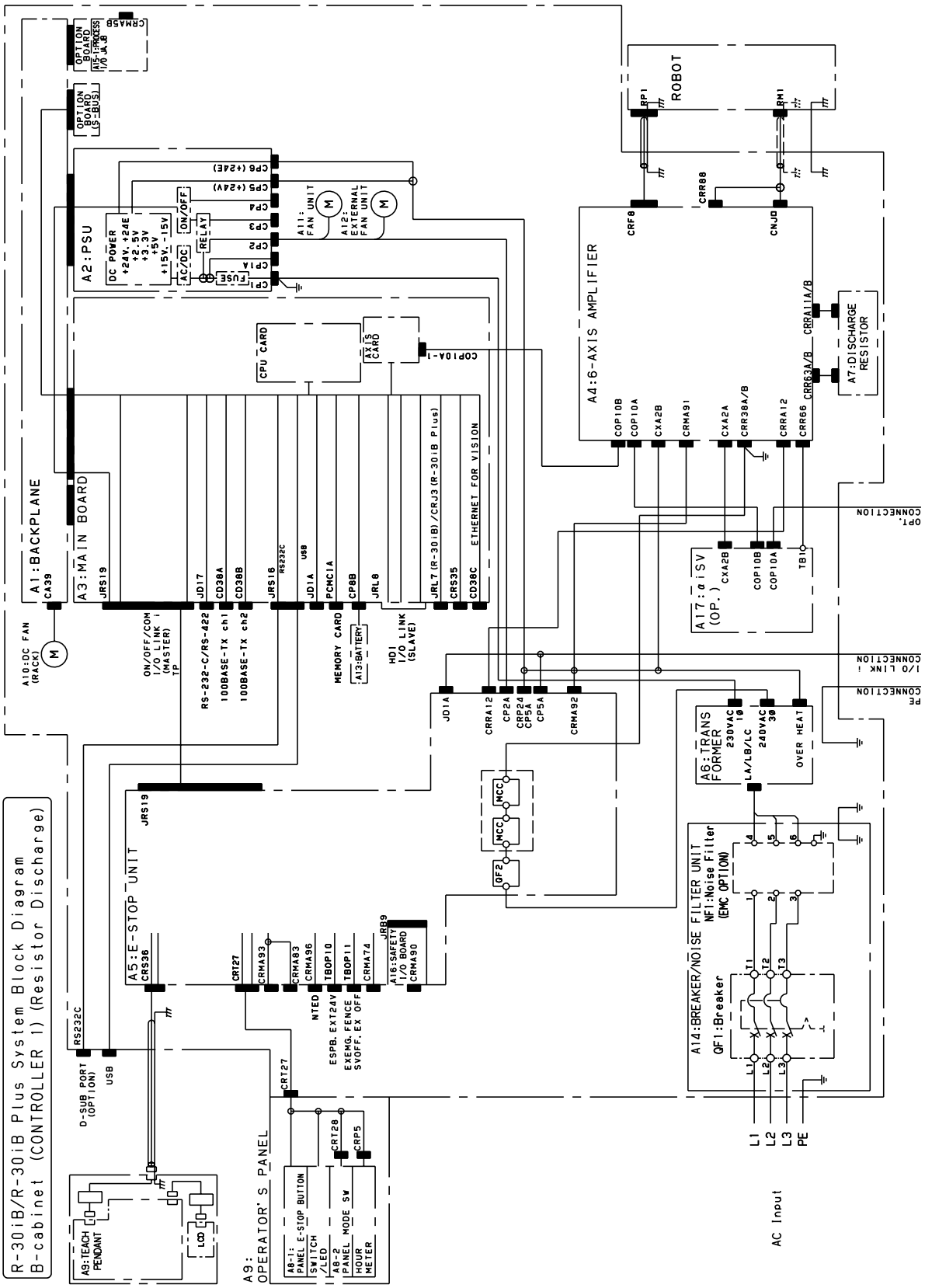

Fig.G.9(c) System block diagram (B-cabinet/Resistor discharge/Controller 1)

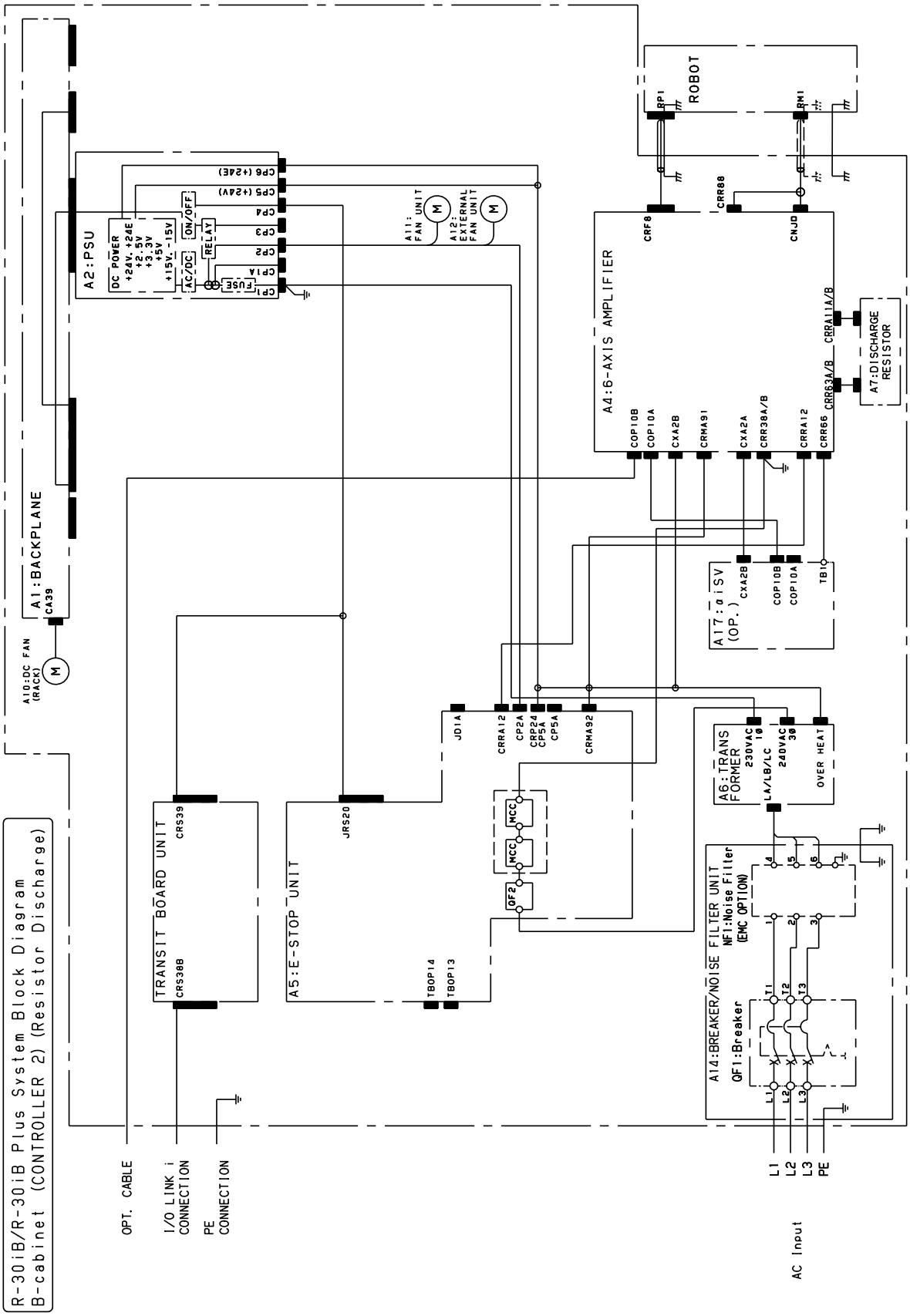

Fig.G.9(d) System block diagram (B-cabinet/ Resistor discharge/Controller 2)

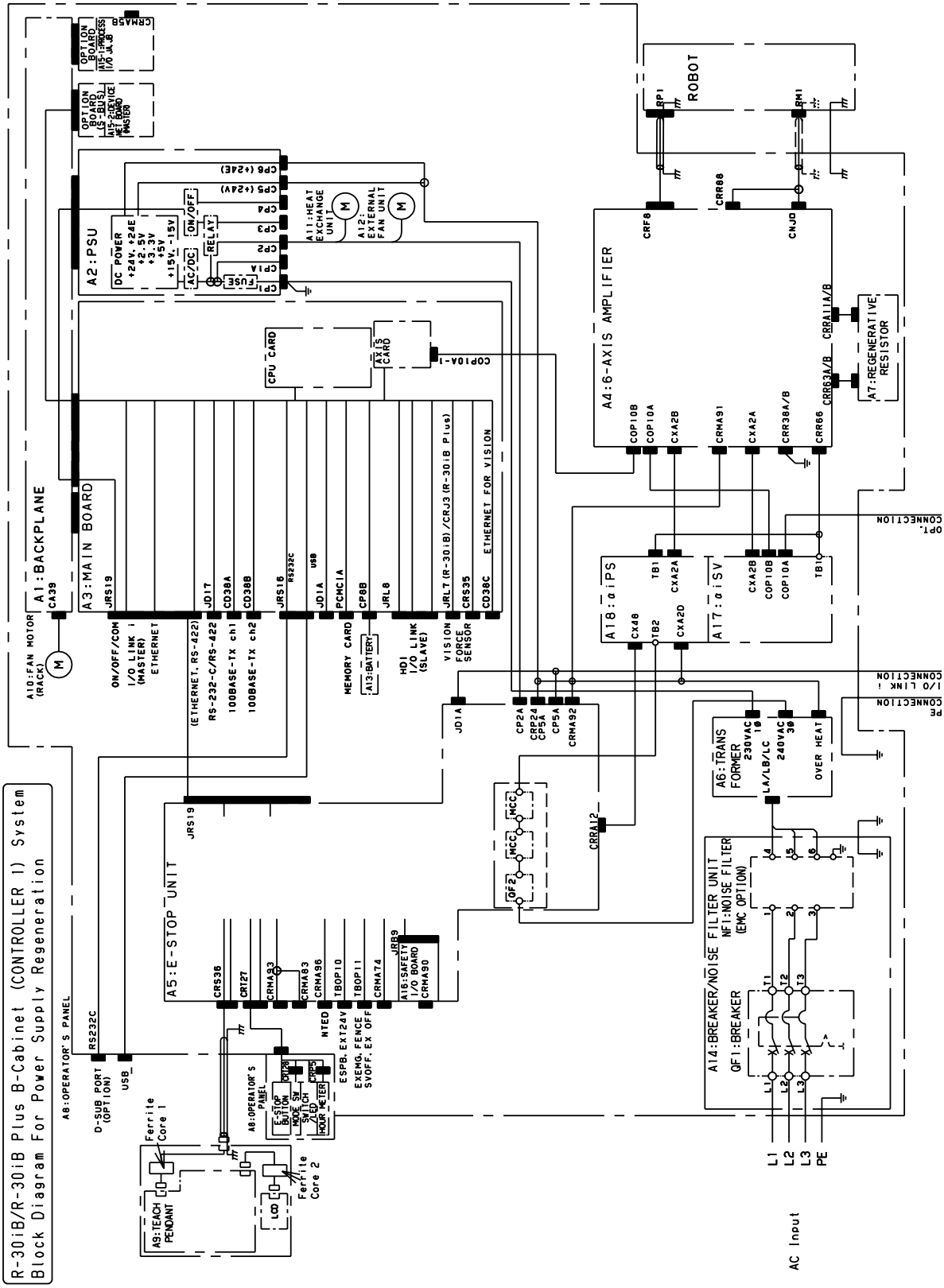

Fig.G.9(e) System block diagram (B-cabinet/Power supply regeneration/Controller 1)

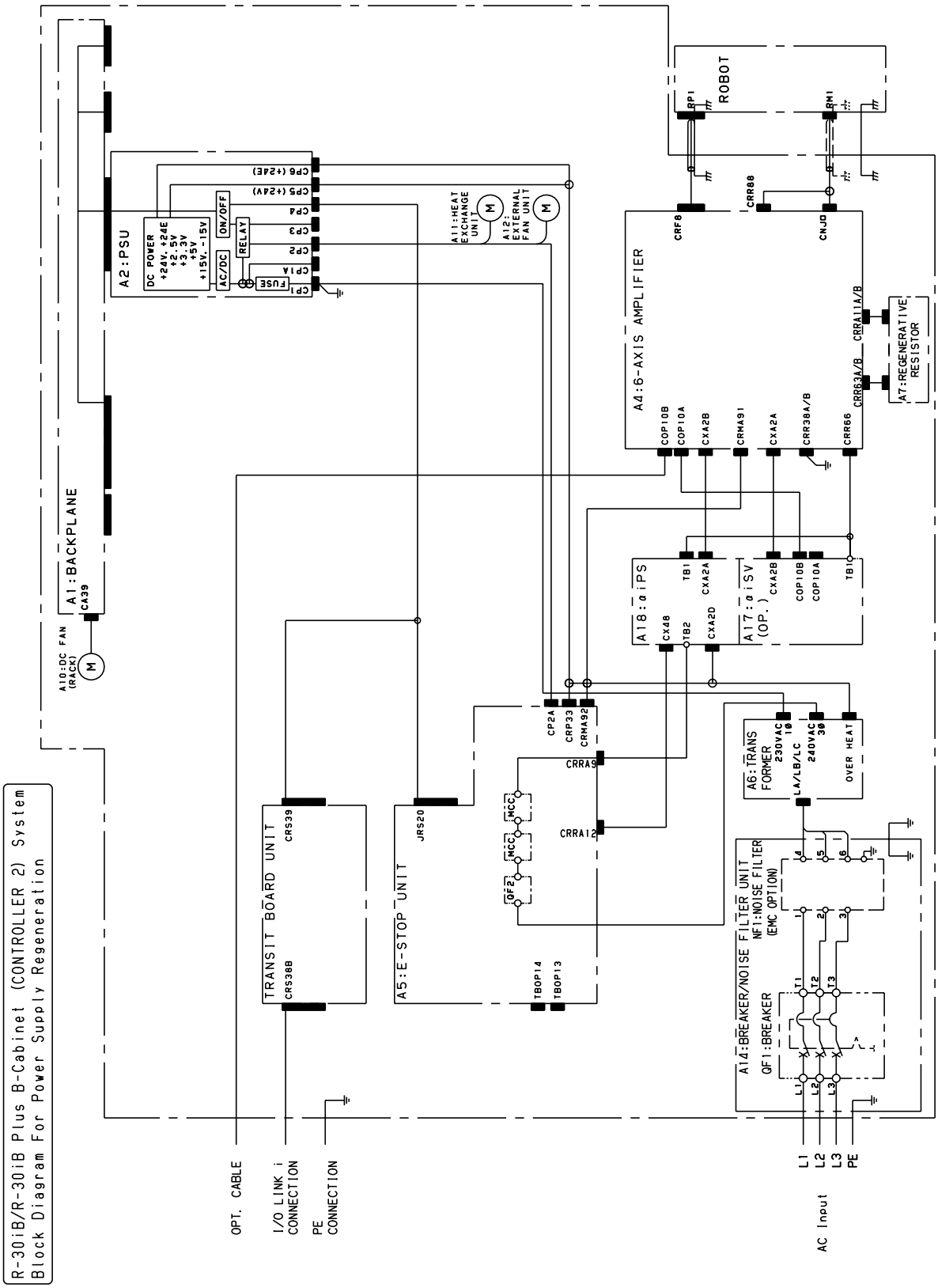

Fig.G.9(f) System block diagram (B-cabinet/Power supply regeneration/Controller 2)

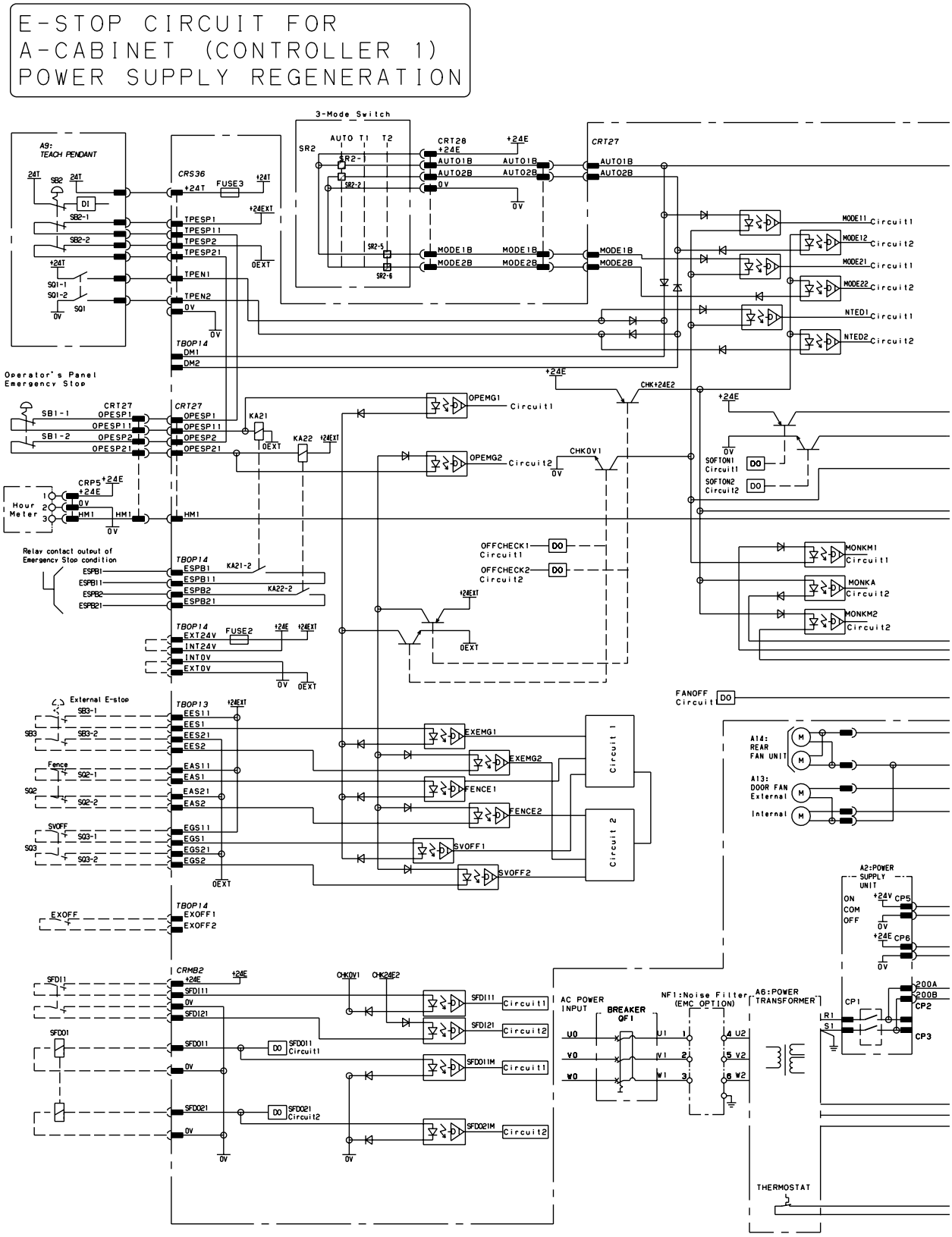

Fig.G.9(g) Emergency circuit connection diagram (A-cabinet/Power supply regeneration/Controller 1)

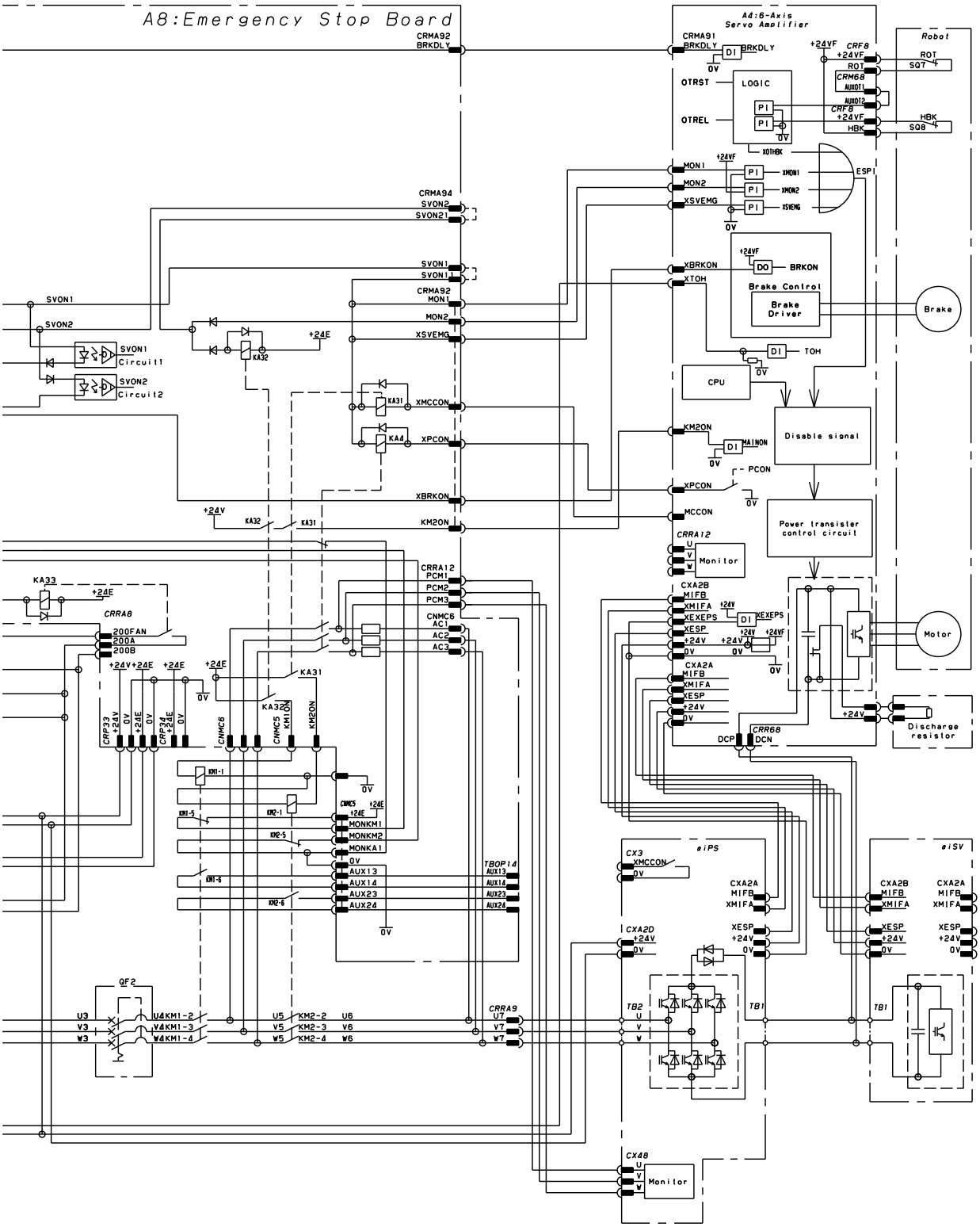
A8:Emergency Stop Board
A4:6-Axis Servo Amplifier
Robot
LOGIC
Brake Control
Brake Driver
Brake
CPU
Disable signal
Power transistor control circuit
Monitor
Motor
Discharge resistor
Circuit1
Circuit2
aiPS
aiSV
QF2

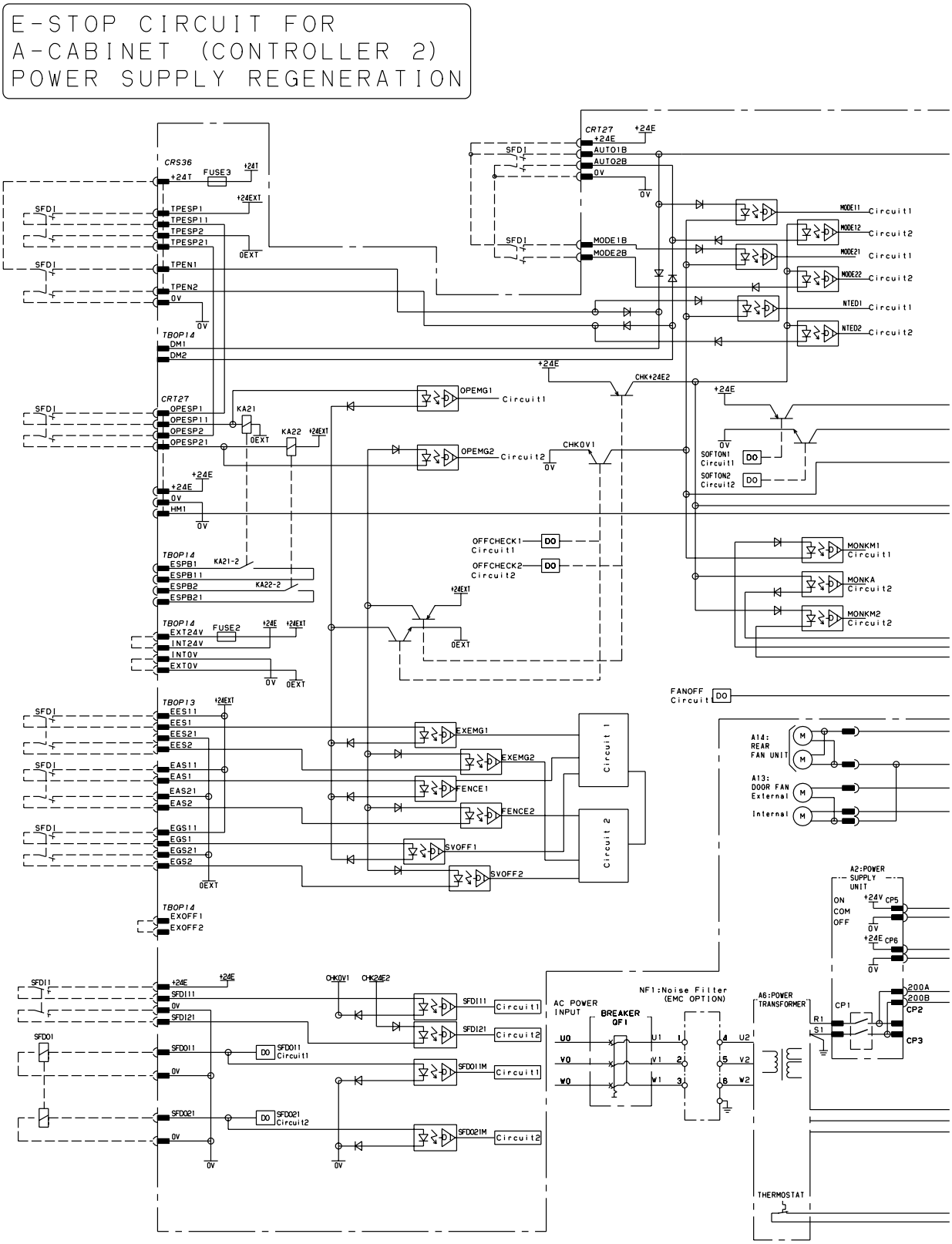

Fig.G.9(h) Emergency circuit connection diagram (A-cabinet/Power supply regeneration/Controller 2)

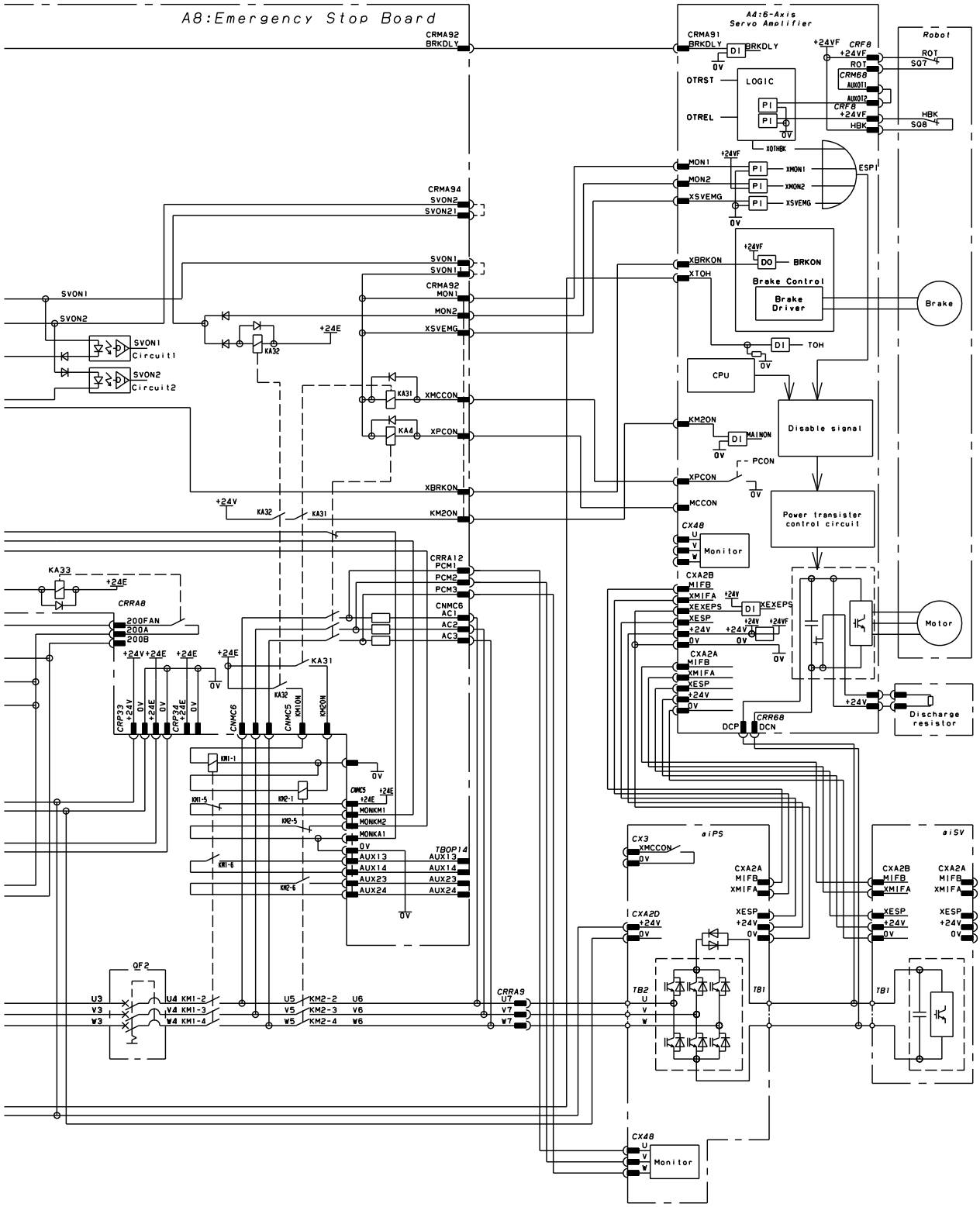
A8:Emergency Stop Board
A4:6-Axis Servo Amplifier
Robot
CRMA92
BRKDLY
CRMA91
BRKDLY
DI
0V
+24VF
CRF8
ROT
SG7
CRM68
AUX01
AUX02
HBK
SG8
OTRST
OTREL
LOGIC
PI
XOTHBK
MON1
MON2
XSVEMG
XMON1
XMON2
ESP1
CRMA94
SVON2
SVON21
SVON1
CRMA92
XBRKON
XTOH
DO
BRKON
Brake Control
Brake Driver
Brake
TOH
CPU
Disable signal
KM2ON
MAINON
PCON
XPCON
MCCON
Power transister control circuit
CX48
Monitor
CXA2B
MIFB
XMIFA
XEXEPS
XESP
CXA2A
DCP
DCN
CRR68
Discharge resistor
Motor
Circuit1
Circuit2
KA32
KA31
KA4
KA33
XMCCON
XPCON
CRRA12
PCM1
PCM2
PCM3
CNMC6
AC1
AC2
AC3
CRRA8
200FAN
200A
200B
CRP33
CRP34
CNMC5
KM1ON
KM1-1
KM1-5
KM1-6
KM2-1
KM2-5
KM2-6
MONKM1
MONKM2
MONKA1
TBOP14
AUX13
AUX14
AUX23
AUX24
QF2
U3
V3
W3
U4 KM1-2
V4 KM1-3
W4 KM1-4
U5 KM2-2 U6
V5 KM2-3 V6
W5 KM2-4 W6
CRRA9
U7
V7
W7
CX3
XMCCON
aiPS
CXA2D
TB2
TB1
aiSV

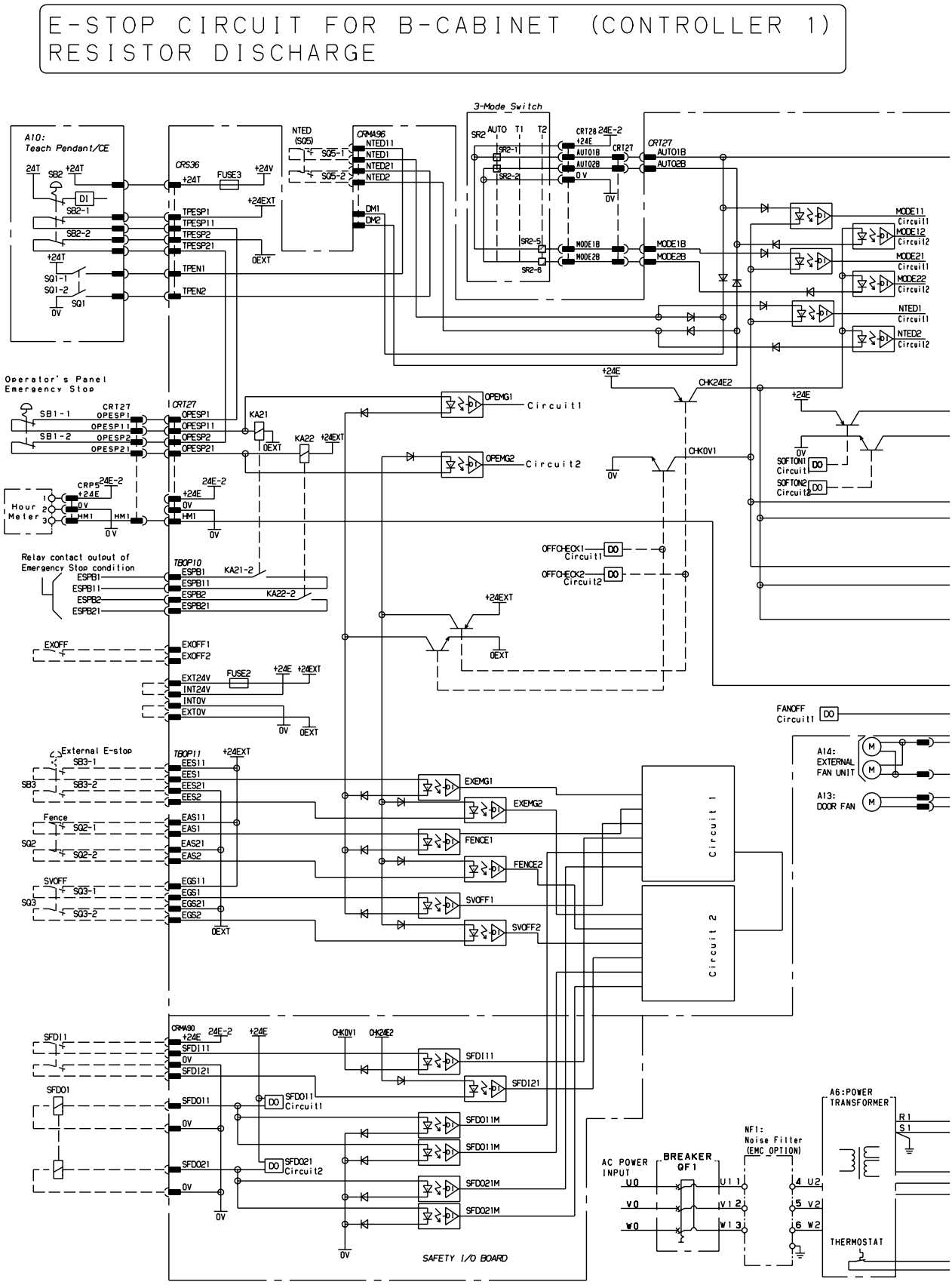

Fig.G.9(i) Emergency circuit connection diagram (B-cabinet/Resistor discharge/Controller 1)

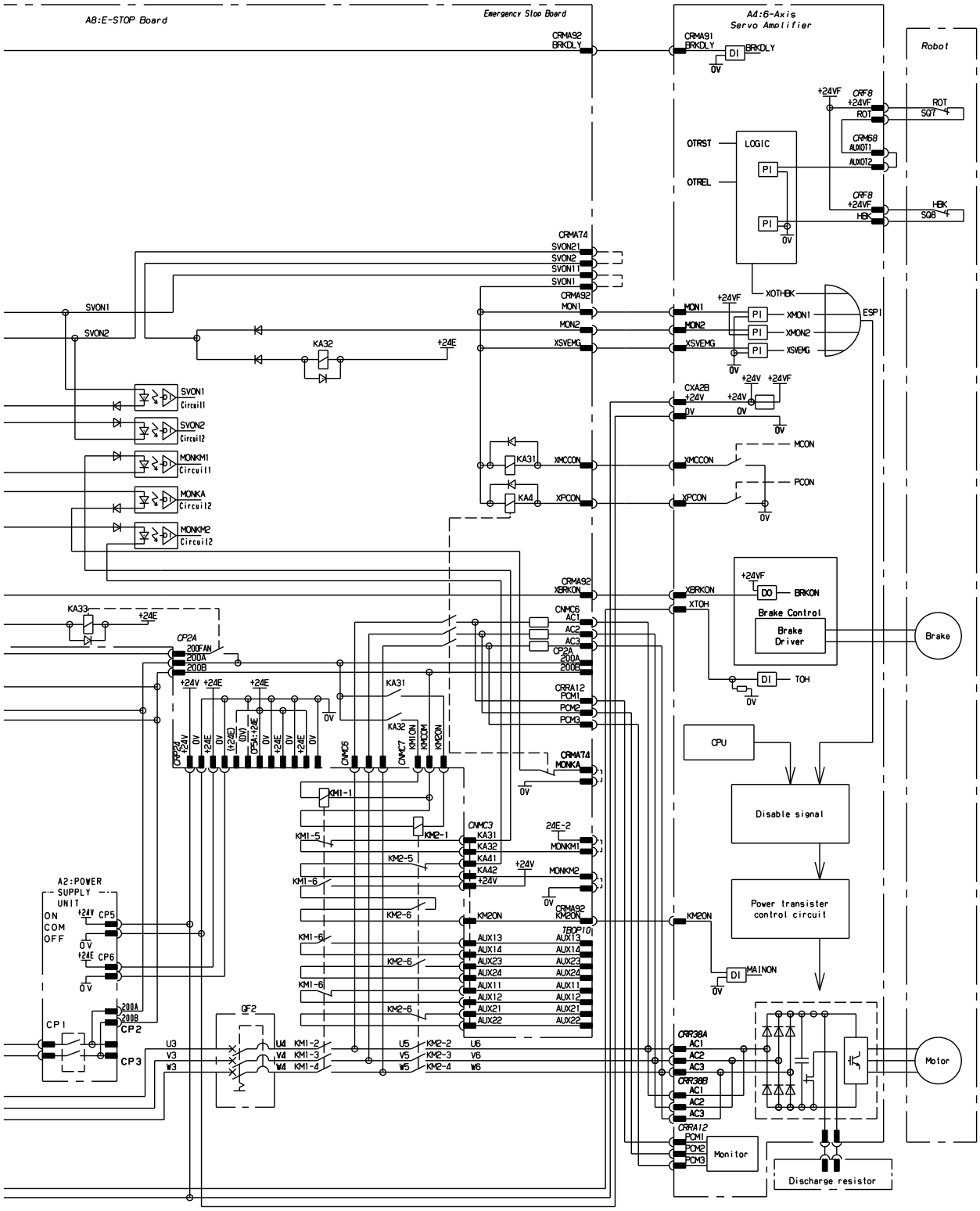
A8:E-STOP Board
Emergency Stop Board
A4:6-Axis Servo Amplifier
Robot
CRMA92 BRKDLY
CRMA91 BRKDLY
DI
BRKDLY
0V
+24VF
CRF8 +24VF
ROT
SQ7
CRM68
AUXOT1
AUXOT2
OTRST
LOGIC
OTREL
PI
HBK
SQ8
CRMA74
SVON21
SVON2
SVON1
CRMA92
MON1
MON2
XSVEMG
XOTHBK
XMON1
XMON2
ESP1
SVON1
SVON2
KA32
+24E
CXA2B
+24V
MCON
PCON
Circuit1
Circuit2
MONKM1
MONKA
MONKM2
KA31
KA4
XMCCON
XPCON
CRMA92 XBRKON
XBRKON
XTOH
DO
BRKON
Brake Control
Brake Driver
Brake
KA33
CP2A
200FAN
200A
200B
CRRA12
POM1
POM2
POM3
CPU
CNMC6
CNMC7
KM1ON
KM2ON
CRMA74 MONKA
KM1-1
KM2-1
KM1-5
KM2-5
KM1-6
KM2-6
CNMC3
KA31
KA32
KA41
KA42
24E-2
MONKM1
MONKM2
Disable signal
Power transister control circuit
A2:POWER SUPPLY UNIT
ON
COM
OFF
CP5
CP6
CP1
CP2
CP3
QF2
U3
V3
W3
U4
V4
W4
U5
V5
W5
U6
V6
W6
KM1-2
KM1-3
KM1-4
KM2-2
KM2-3
KM2-4
CRMA92 KM2ON
TBOP10
AUX13
AUX14
AUX23
AUX24
AUX11
AUX12
AUX21
AUX22
MAINON
CRR38A
CRR38B
AC1
AC2
AC3
Motor
Monitor
Discharge resistor

E-STOP CIRCUIT FOR B-CABINET (CONTROLLER 2)
RESISTOR DISCHARGE

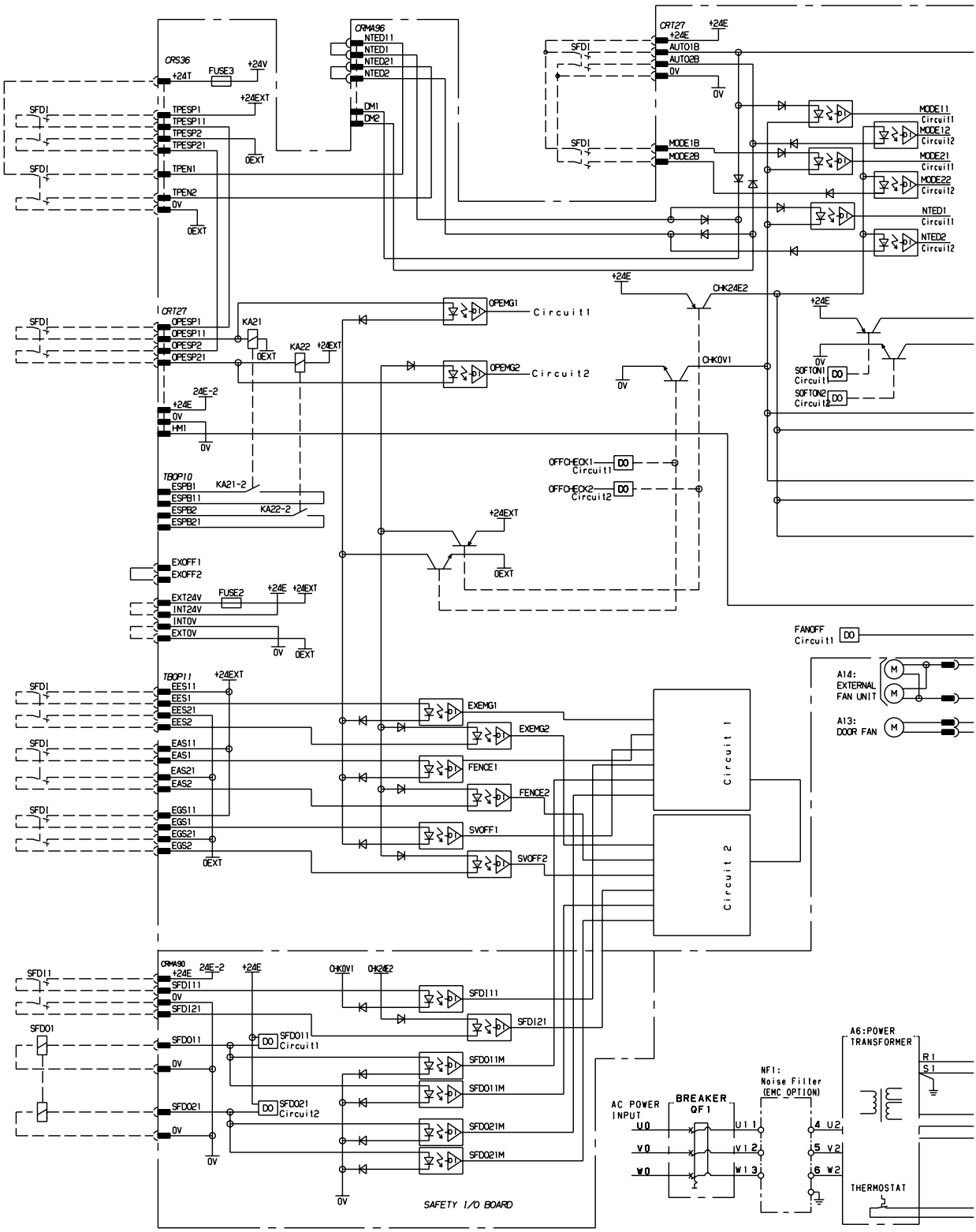

Fig.G.9(j) Emergency circuit connection diagram (B-cabinet/ Resistor discharge/Controller 2)

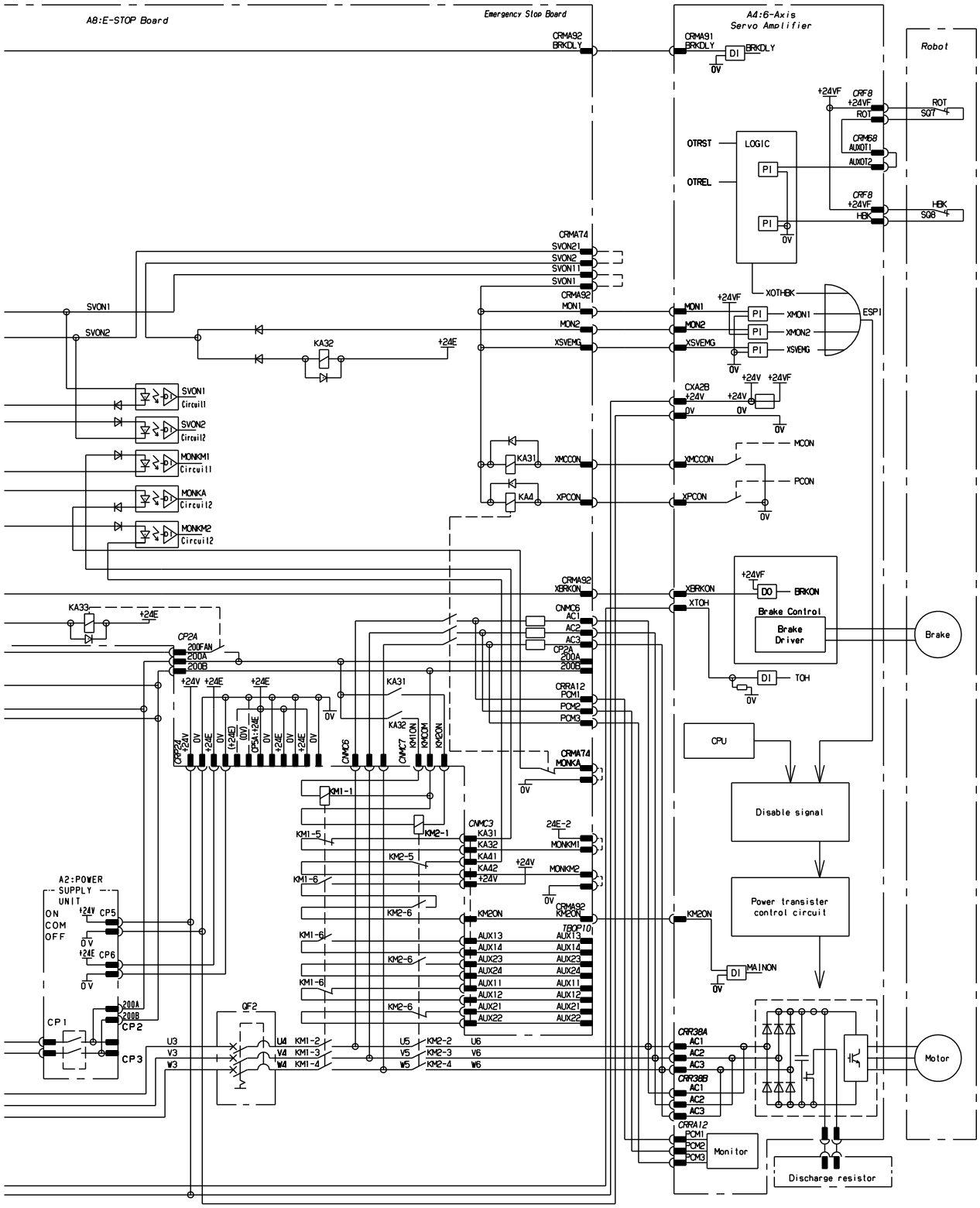
A8:E-STOP Board
Emergency Stop Board
A4:6-Axis
Servo Amplifier
Robot
LOGIC
OTRST
OTREL
XOTHBK
ESP1
XMON1
XMON2
XSVEMG
MCON
PCON
Brake Control
Brake
Driver
BRKON
TOH
CPU
Disable signal
Power transister
control circuit
MAINON
Monitor
Discharge resistor
Motor
A2:POWER
SUPPLY
UNIT
ON
COM
OFF
SVON1
SVON2
KA32
KA31
KA4
KA33
+24E
+24V
+24VF
0V
CP2A
CP1
CP2
CP3
CP5
CP6
QF2
KM1-1
KM2-1
KM1-5
KM2-5
KM1-6
KM2-6
KM2ON
MONKM1
MONKM2
MONKA
XBRKON
XTOH
XMCCON
XPCON
XBRKDLY
BRKDLY
ROT
HBK
SQ7
SQ8
U3
V3
W3
U4
V4
W4
U5
V5
W5
U6
V6
W6

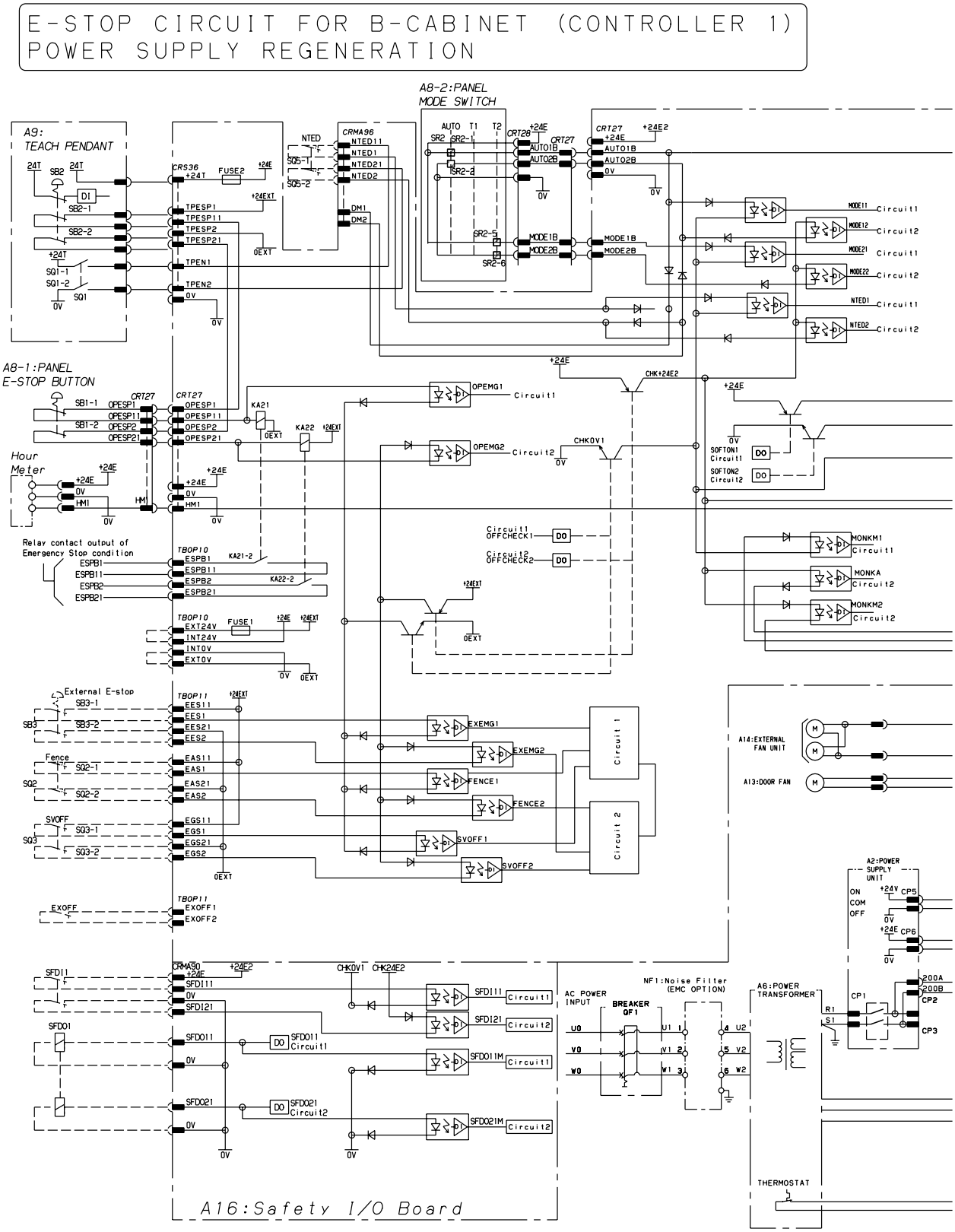

Fig.G.9(k) Emergency circuit connection diagram (B-cabinet/Power supply regeneration/Controller 1)

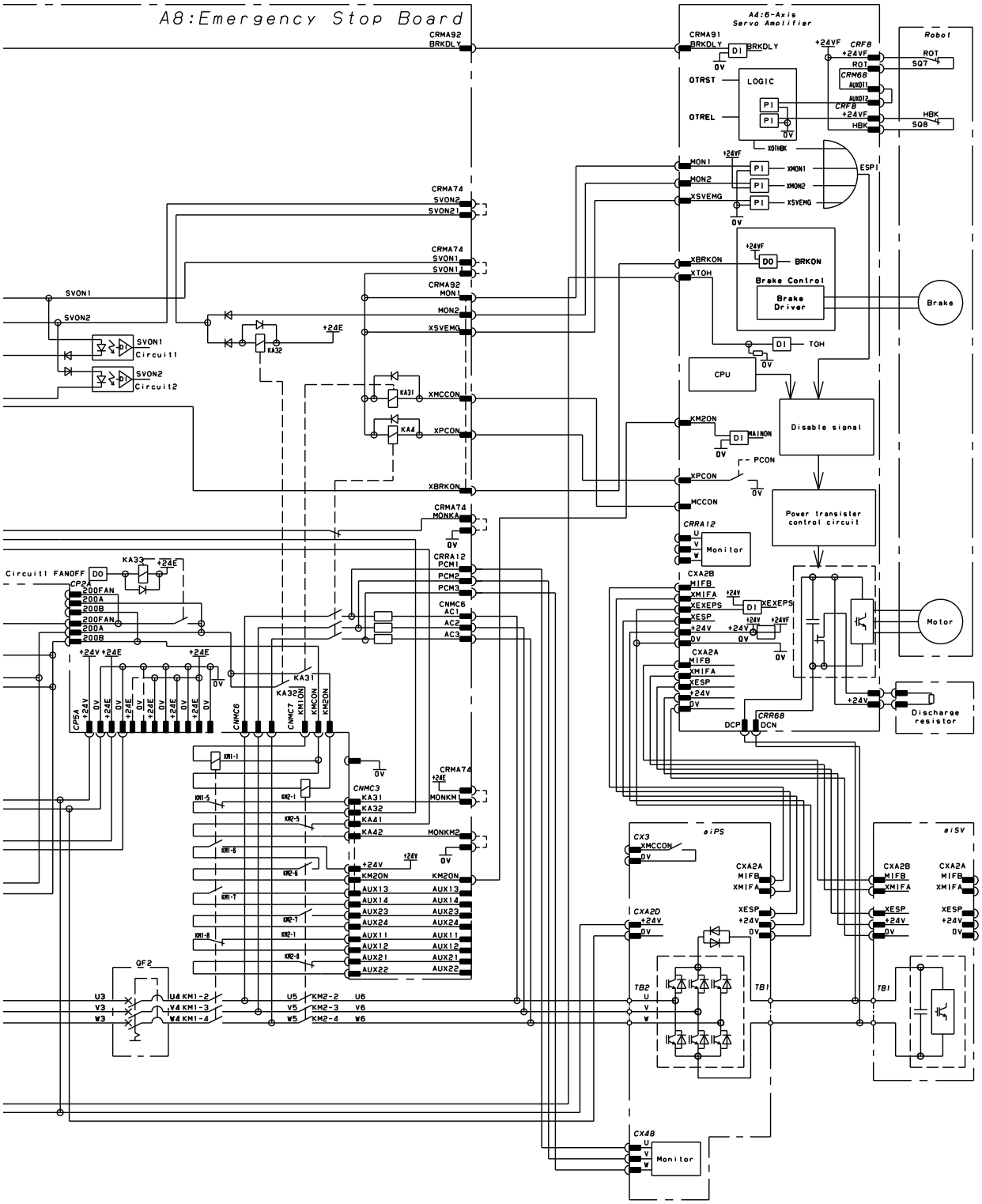
A8:Emergency Stop Board
A4:6-Axis Servo Amplifier
Robot
LOGIC
Brake Control
Brake Driver
Brake
CPU
Disable signal
Power transister control circuit
Monitor
Motor
Discharge resistor
aiPS
aiSV
Circuit1
Circuit2
Circuit1 FANOFF

E-STOP CIRCUIT FOR B-CABINET (CONTROLLER 2)
POWER SUPPLY REGENERATION

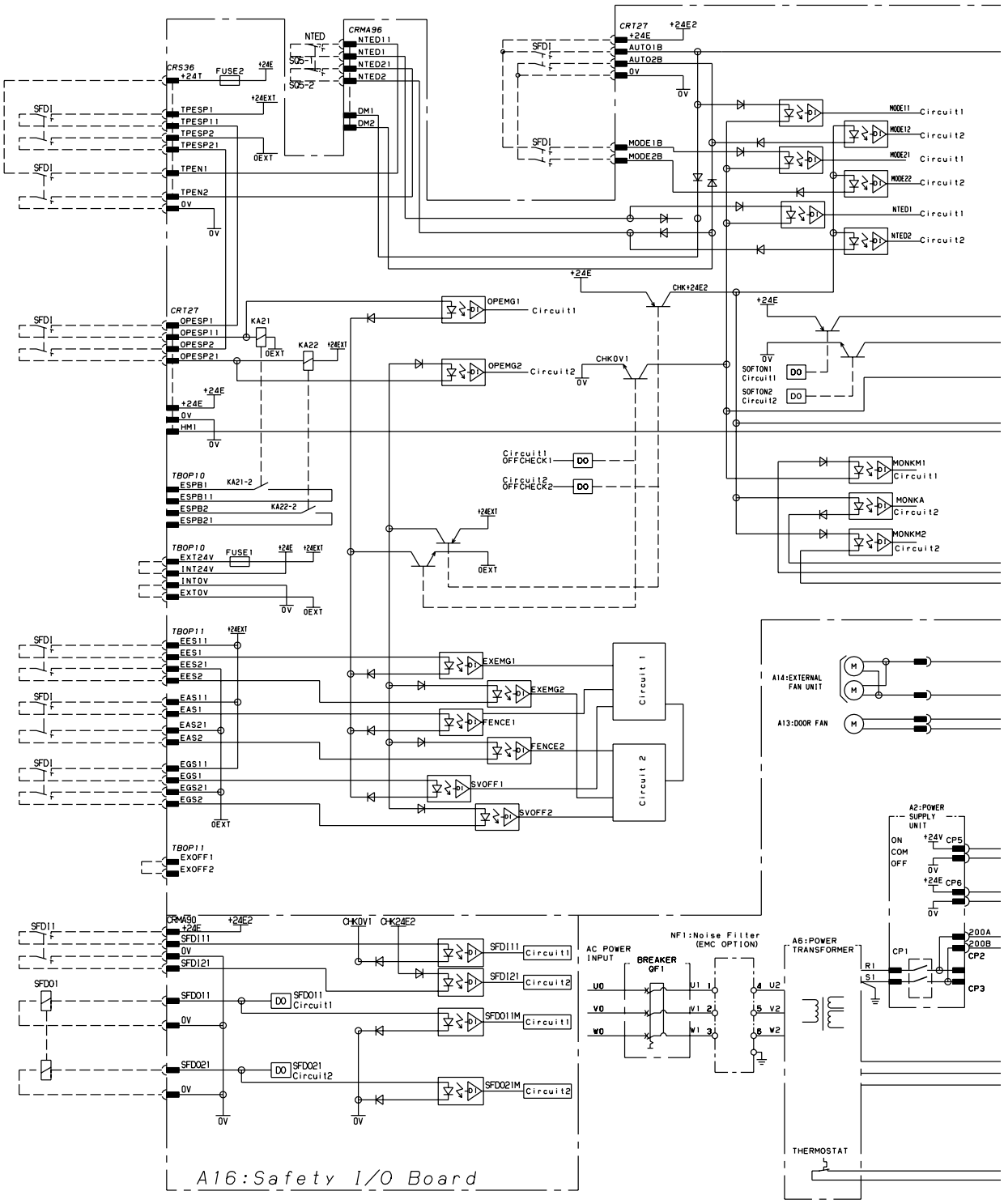

Fig.G.9(l) Emergency circuit connection diagram (B-cabinet/Power supply regeneration/Controller 2)

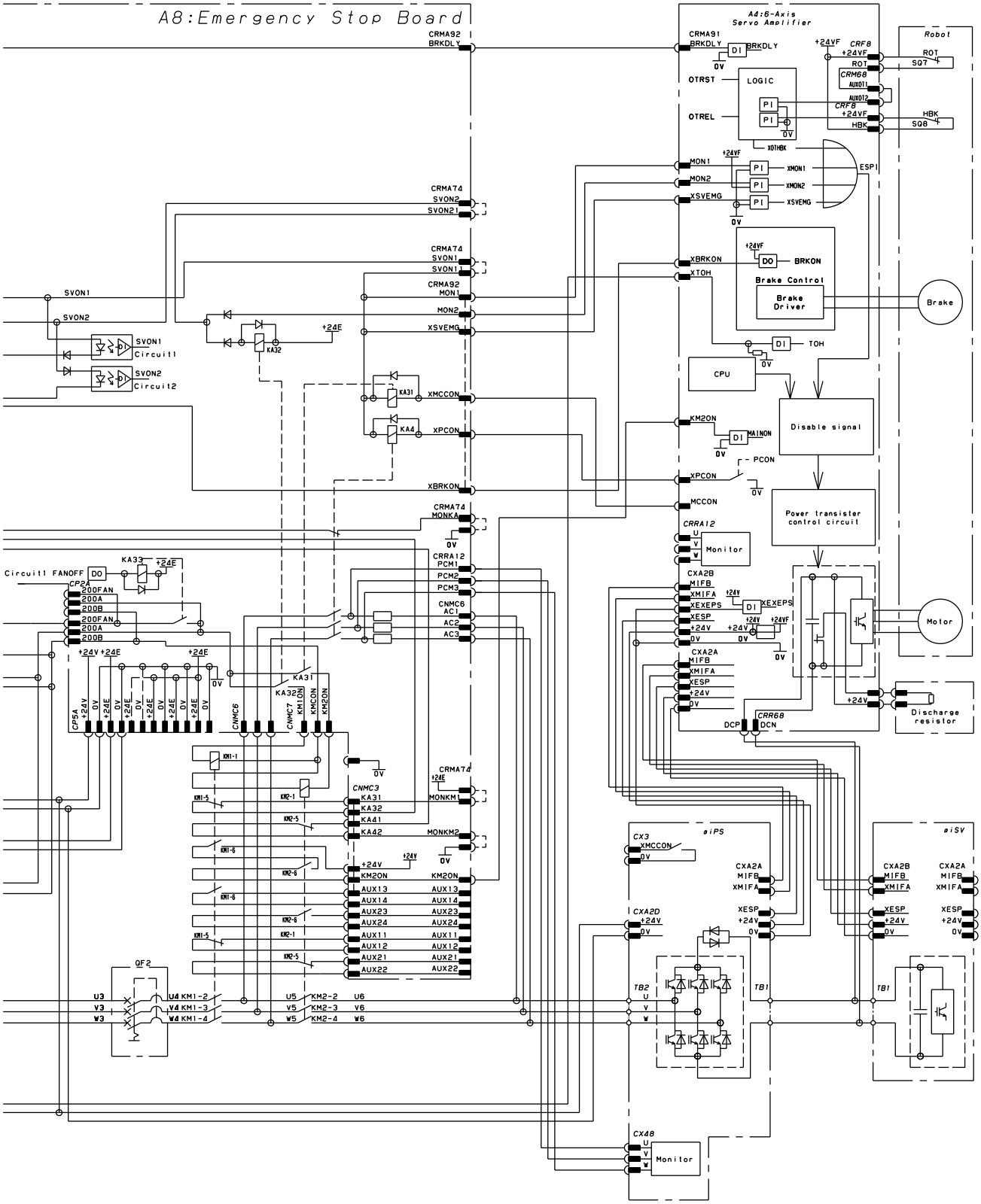
A8:Emergency Stop Board
A4:6-Axis Servo Amplifier
Robot
LOGIC
Brake Control
Brake Driver
Brake
CPU
Disable signal
Power transister control circuit
Monitor
Motor
Discharge resistor
Circuit1
Circuit2
aiPS
aiSV

CONNECTION BETWEEN CONTROLLER 1 AND 2 (A-CABINET)

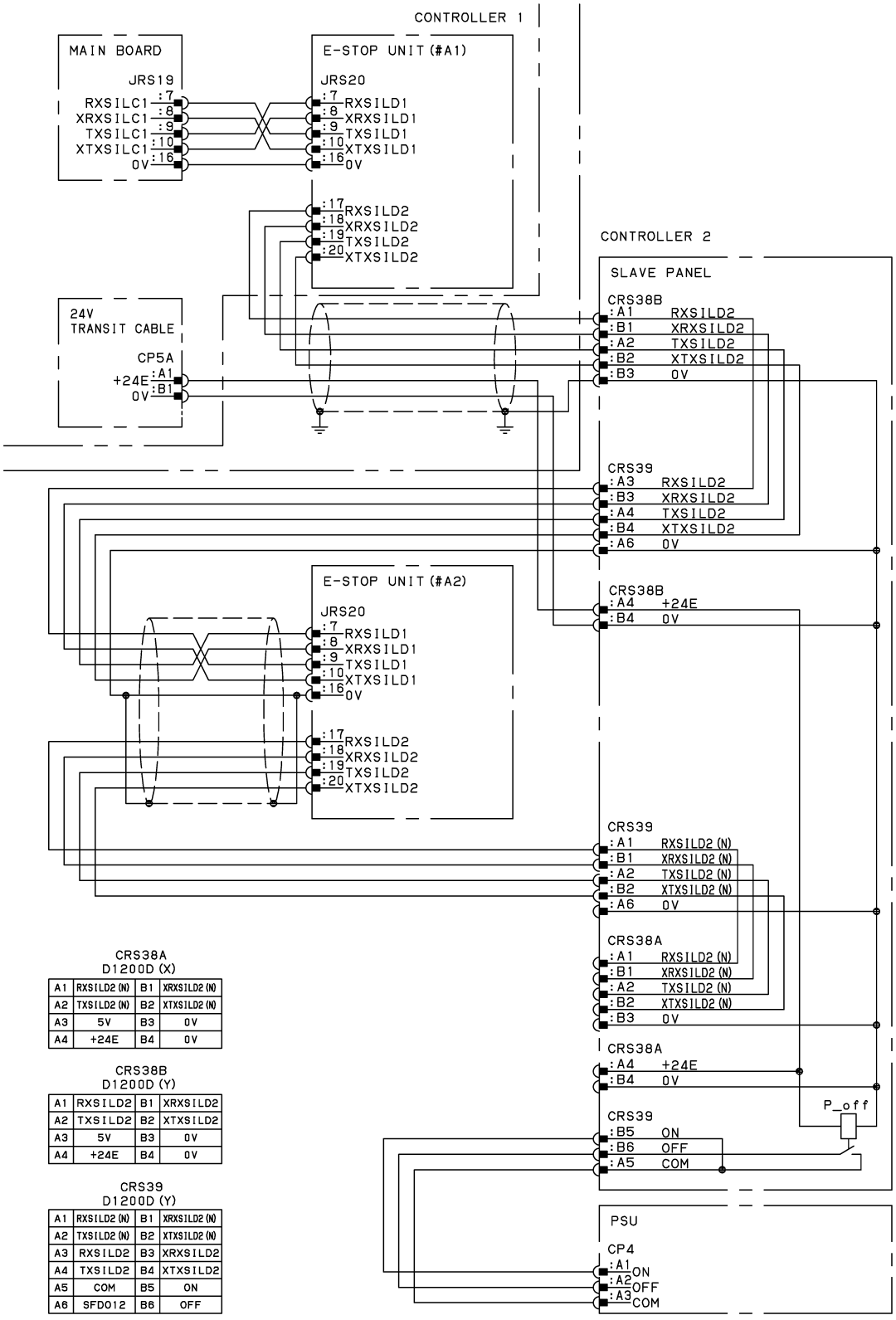

CRS38A
D1200D (X)

A1	RXSILD2 (N)	B1	XRXSILD2 (N)
A2	TXSILD2 (N)	B2	XTXSILD2 (N)
A3	5V	B3	0V
A4	+24E	B4	0V

CRS38B
D1200D (Y)

A1	RXSILD2	B1	XRXSILD2
A2	TXSILD2	B2	XTXSILD2
A3	5V	B3	0V
A4	+24E	B4	0V

CRS39
D1200D (Y)

A1	RXSILD2 (N)	B1	XRXSILD2 (N)
A2	TXSILD2 (N)	B2	XTXSILD2 (N)
A3	RXSILD2	B3	XRXSILD2
A4	TXSILD2	B4	XTXSILD2
A5	COM	B5	ON
A6	SFD012	B6	OFF

Fig.G.9(m) Connection between controller 1 and 2 (A-cabinet)

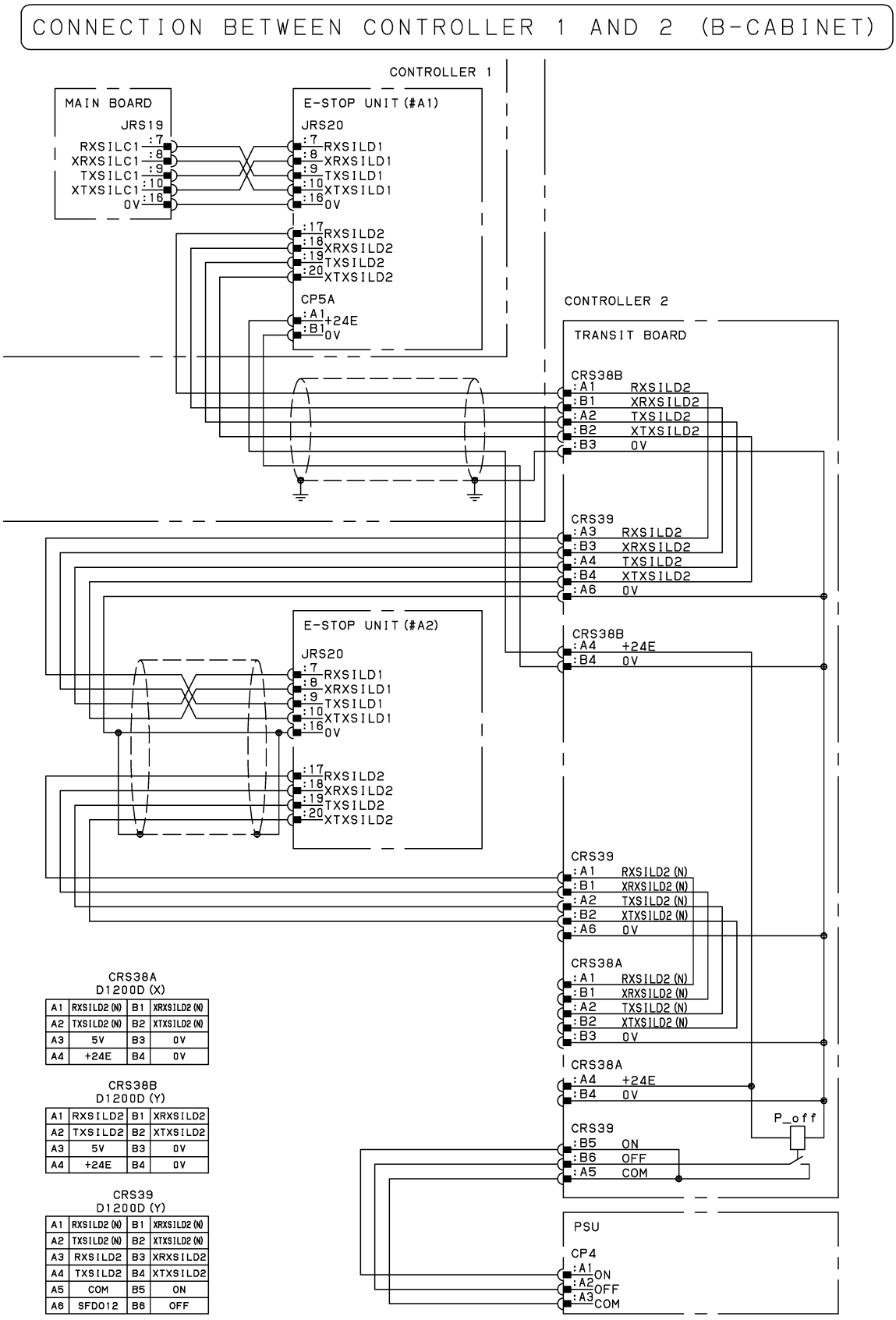

Fig.G.9(n) Connection between controller 1 and 2 (B-cabinet)

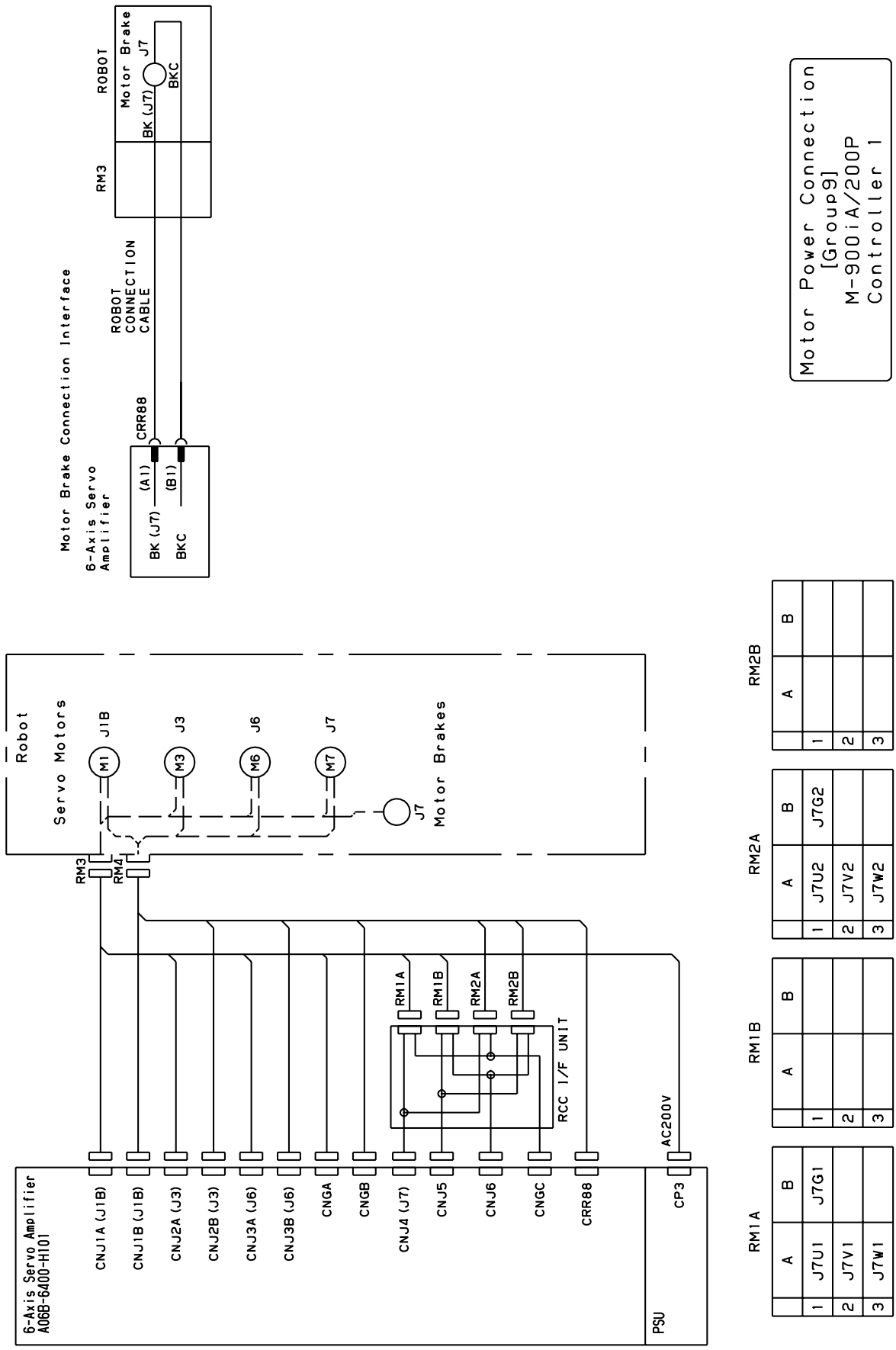

Fig.G.9(o) Motor power connection (Group 9:M-900*i*A/200P, Controller 1)

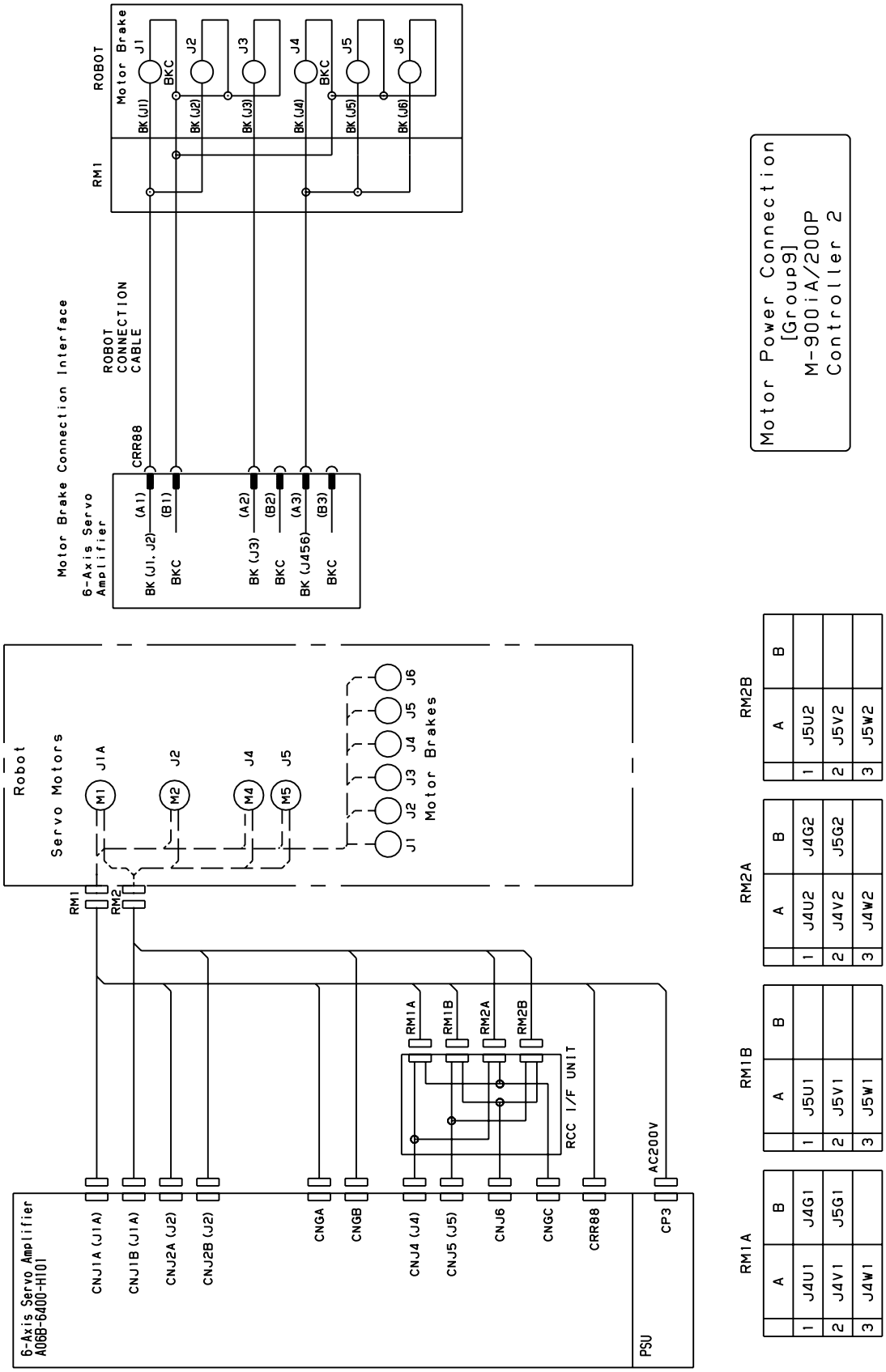

Fig.G.9(p) Motor power connection (Group 9:M-900*i*A/200P, Controller 2)

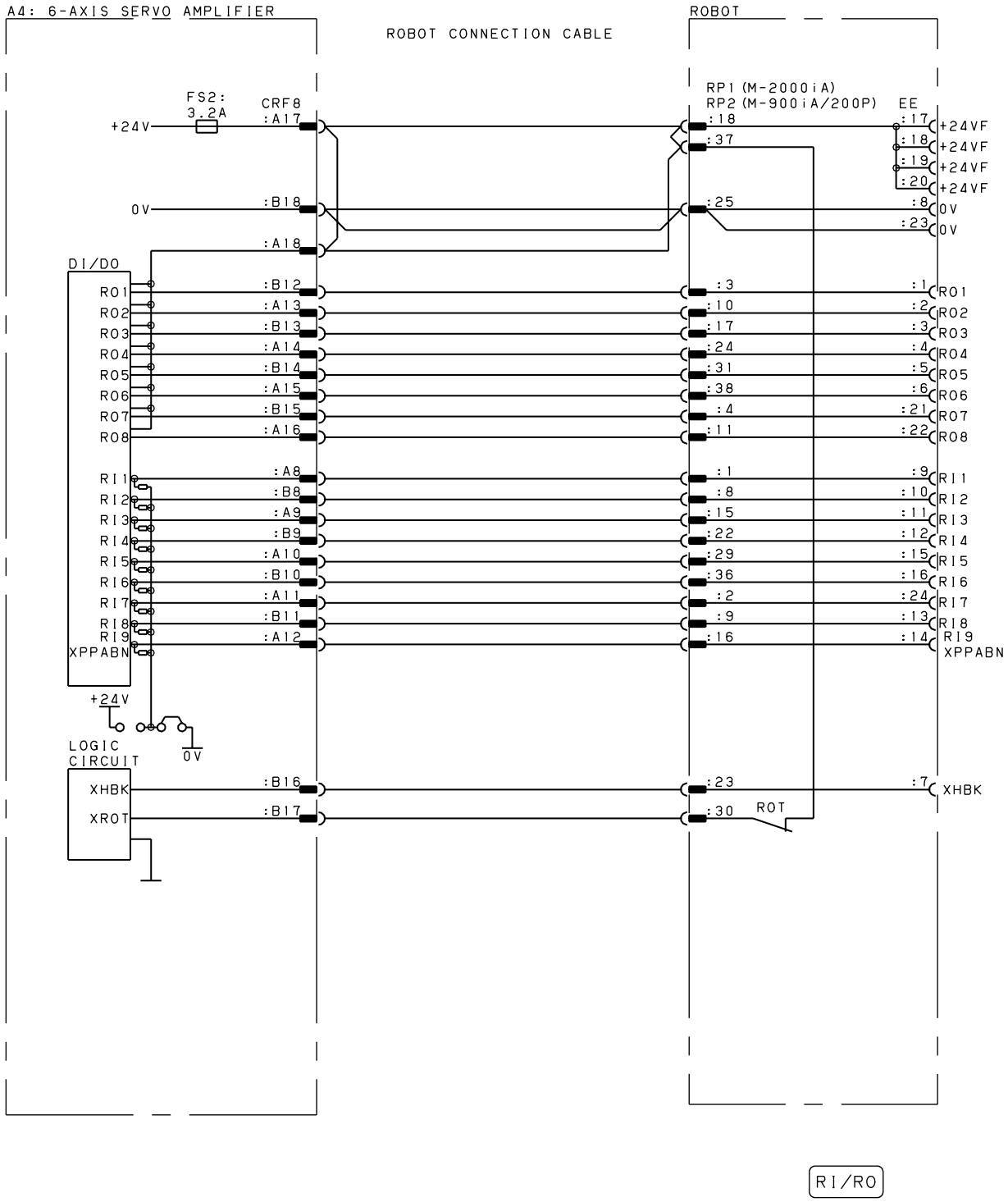

Fig.G.9(q) RI/RO connection diagram (Group 9:M-900*i*A/200P)

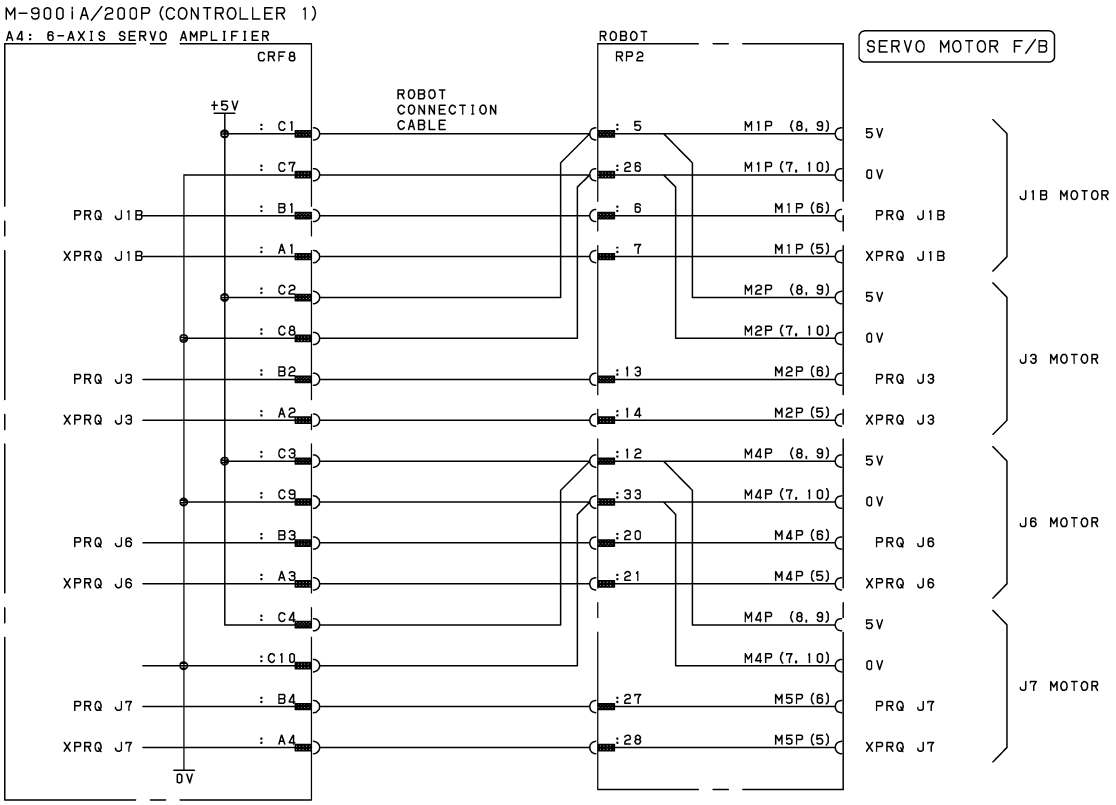

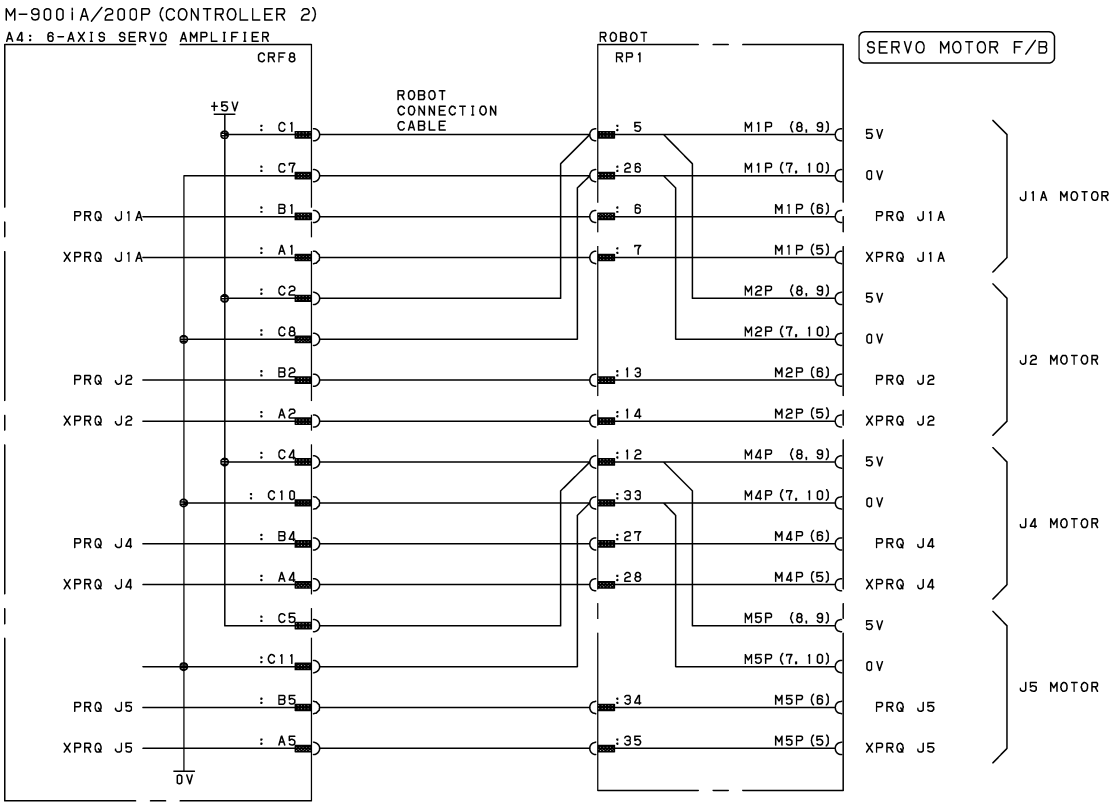

Fig.G.9(r) Pulsecoder signal connection diagram (Group 9:M-900*i*A/200P)

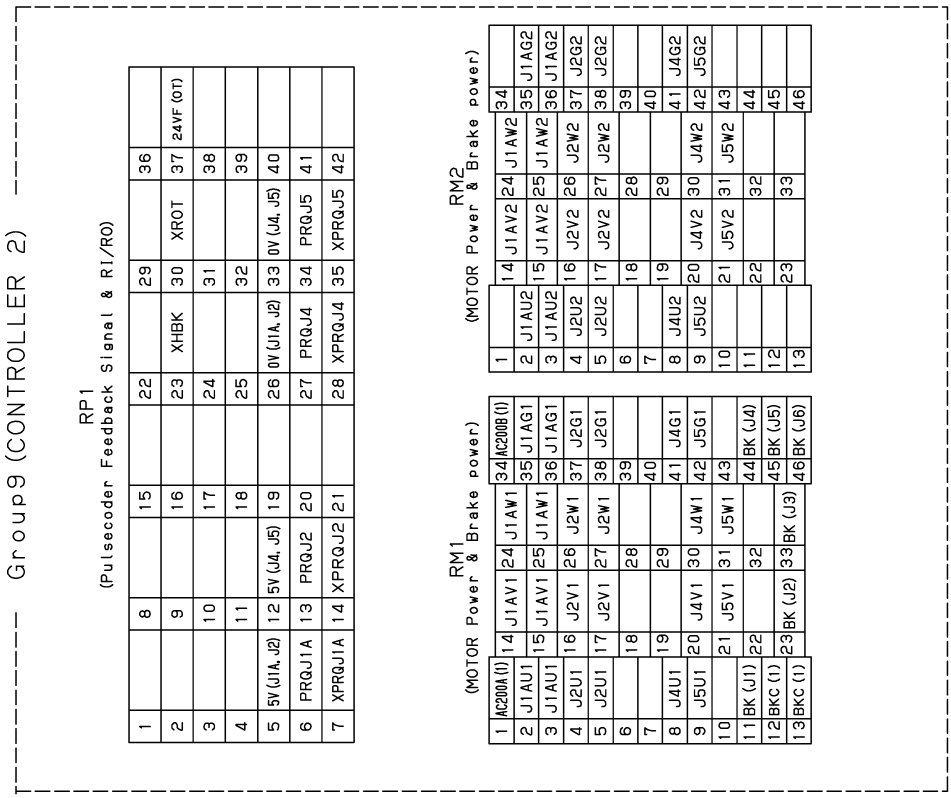

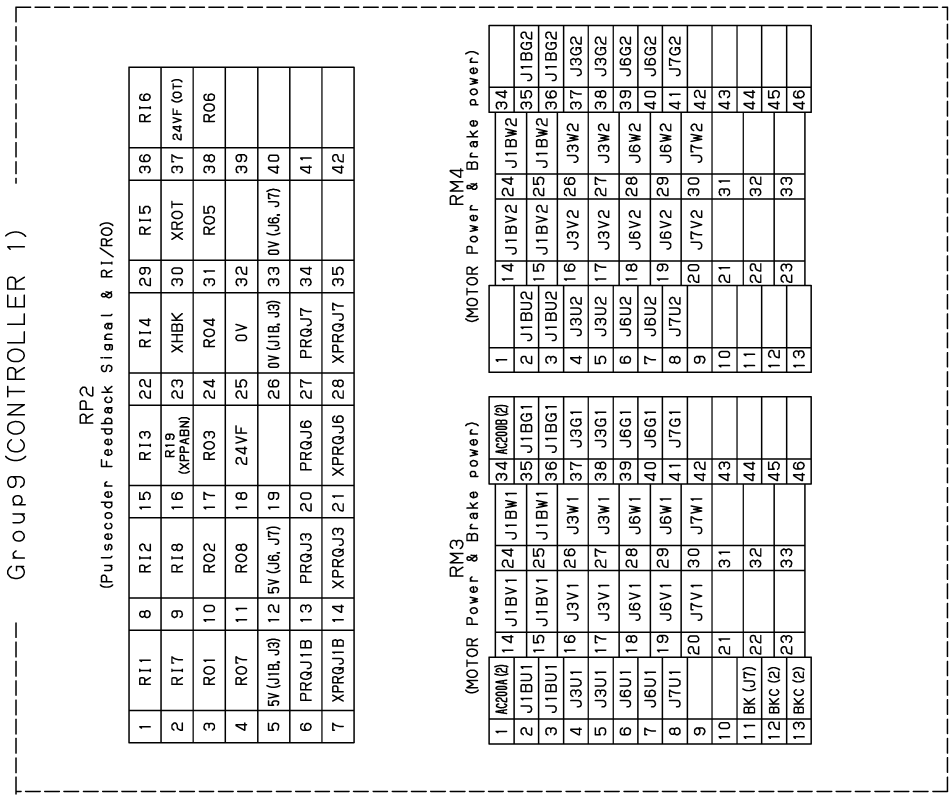

Mechanical Interface
Group9
M-900iA/200P

Fig.G.9(s) Mechanical unit interface (Group 9:M-900*i*A/200P)

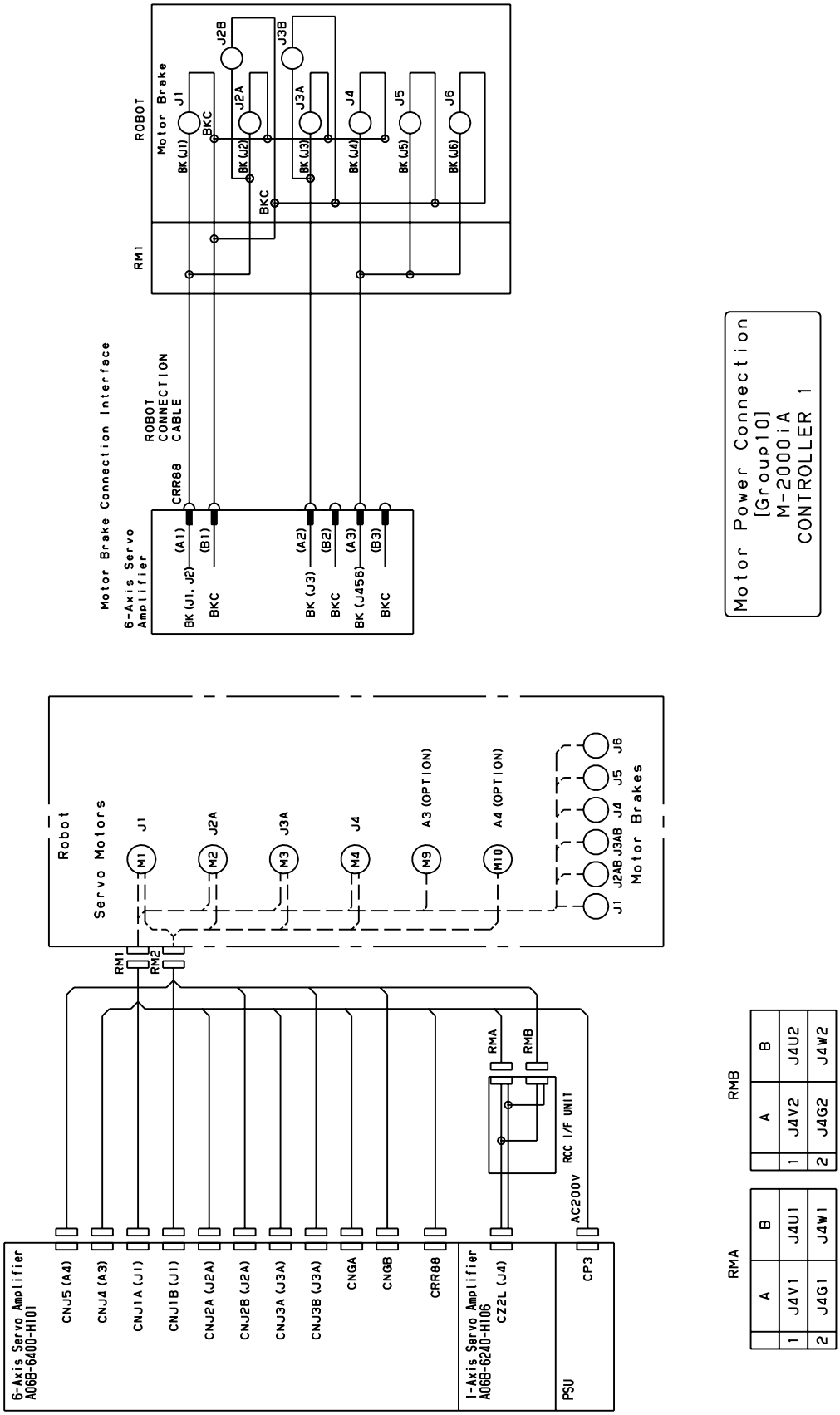

Fig.G.9(t) Motor power connection (Group 10:M-2000*i*A/900L/1200, Controller 1)

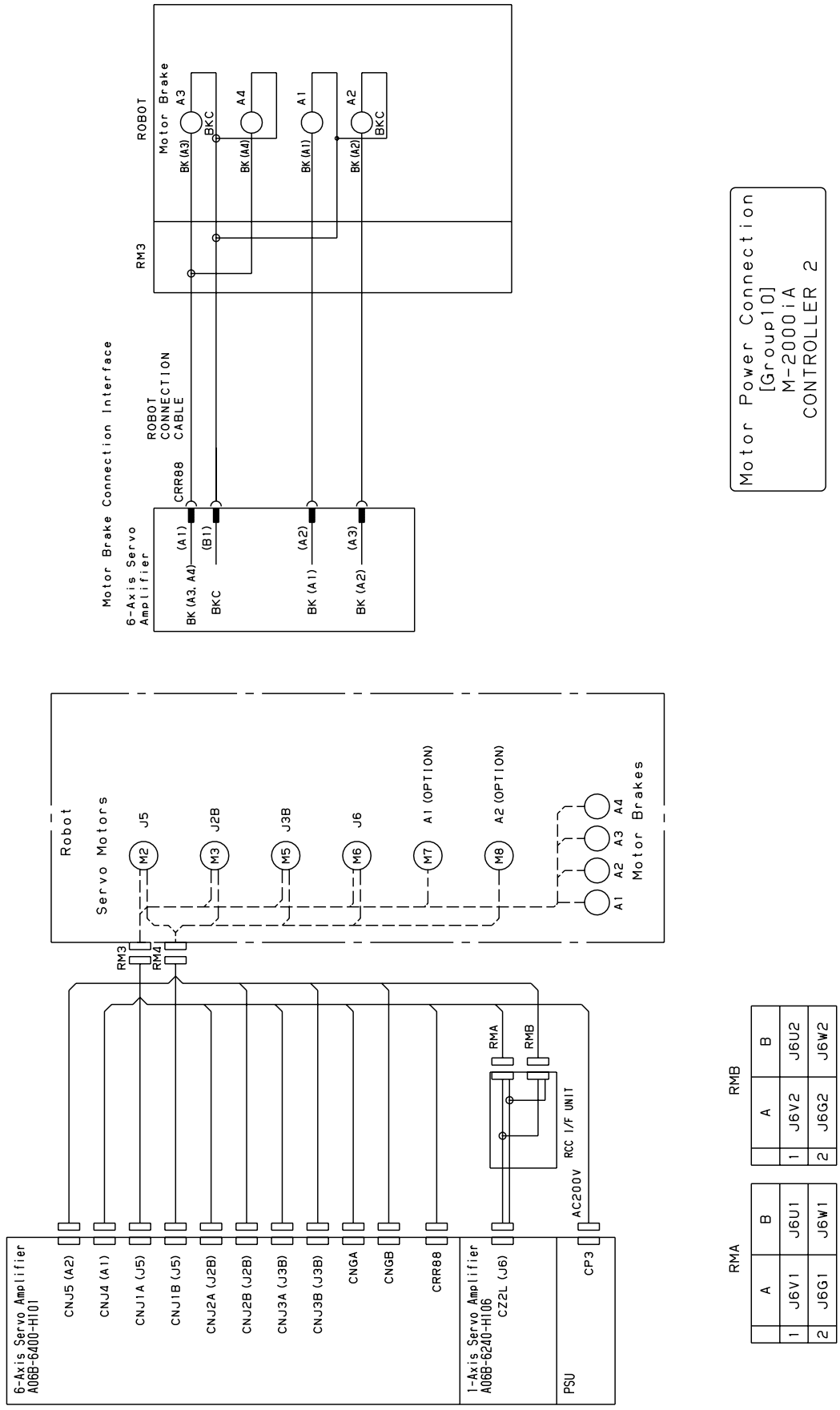

Fig.G.9(u) Motor power connection (Group 10:M-2000*i*A/900L/1200, Controller 2)

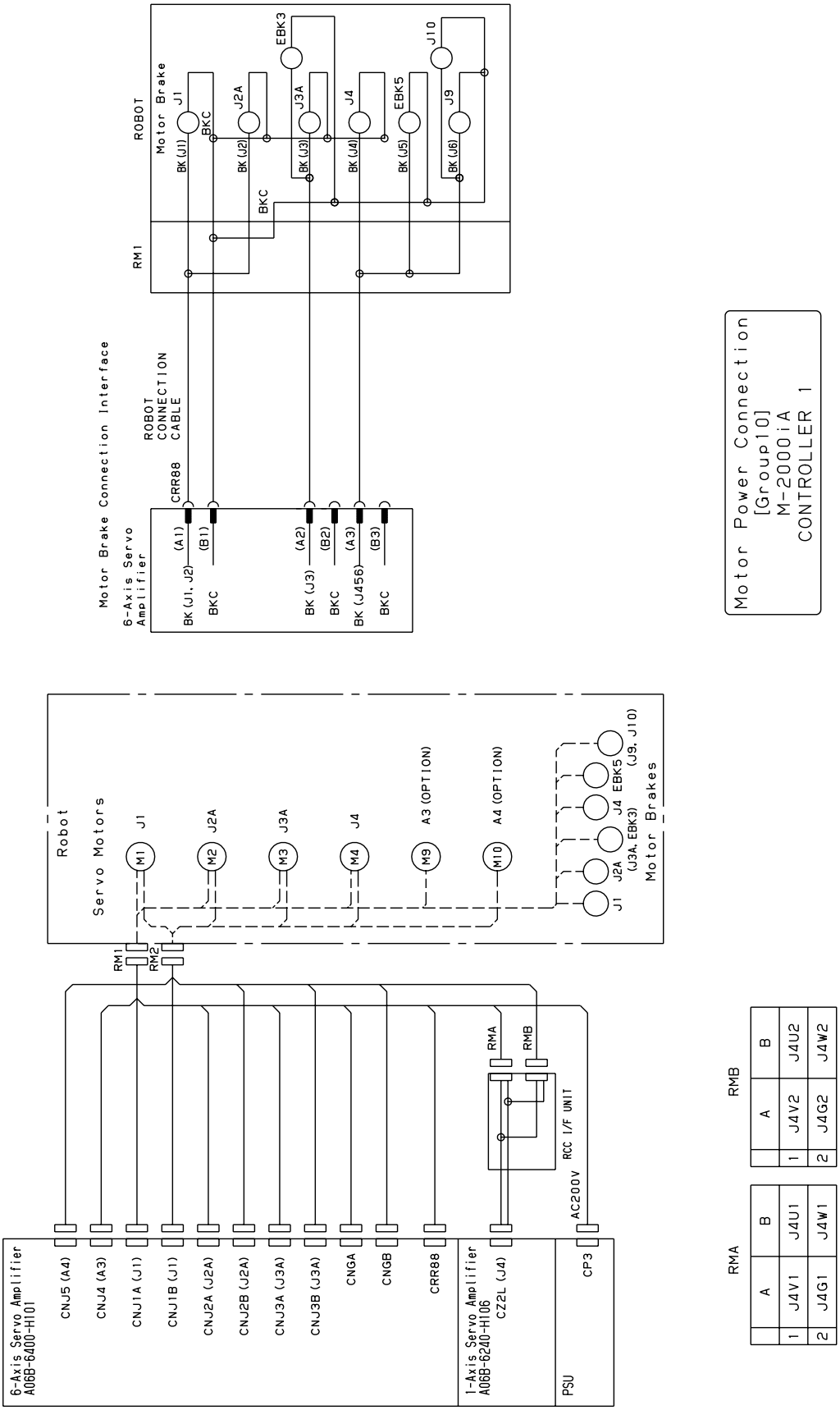

Fig.G.9(v) Motor power connection (Group 10:M-2000*i*A/1700L/2300, Controller 1)

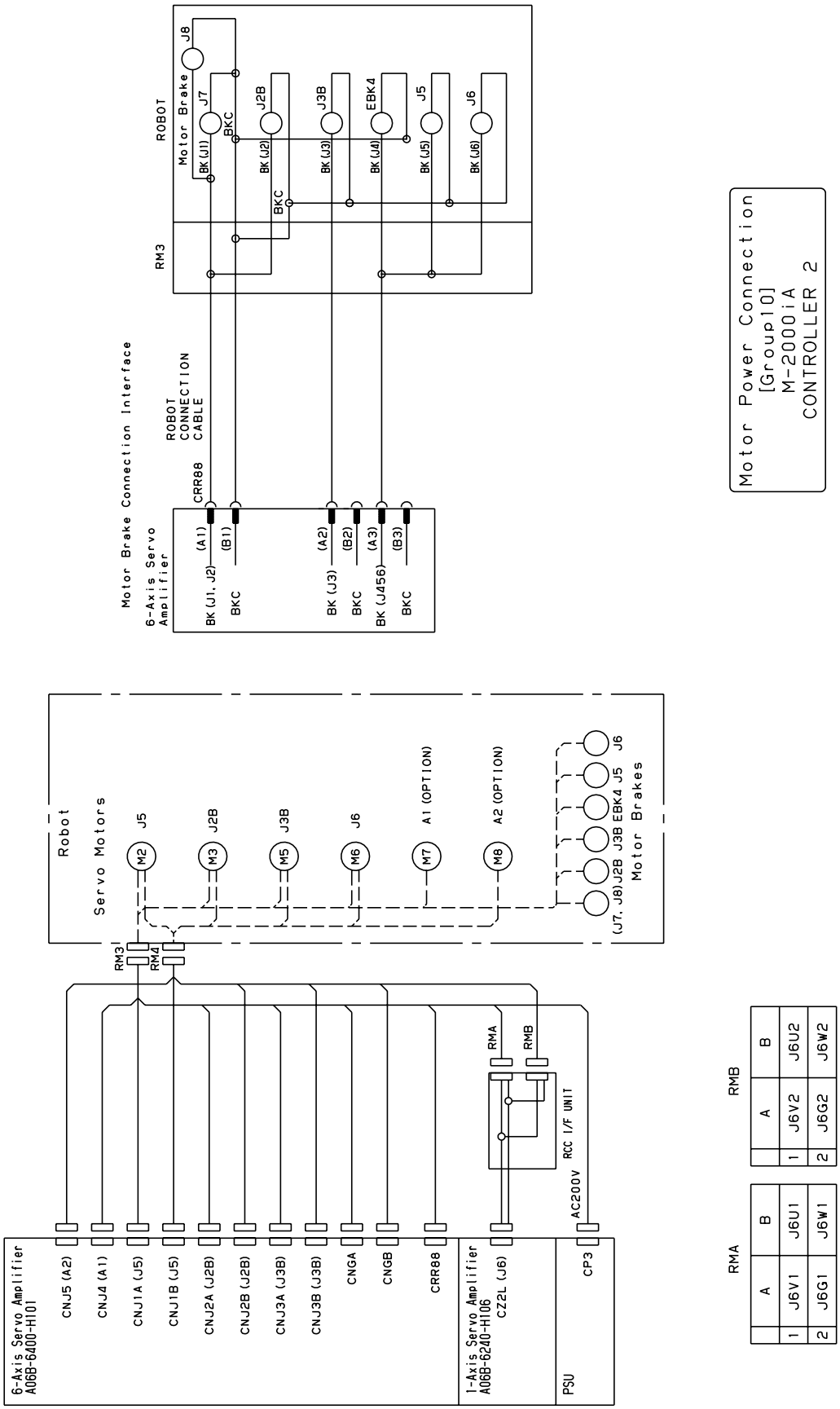

Fig.G.9(w) Motor power connection (Group 10:M-2000*i*A/1700L/2300, Controller 2)

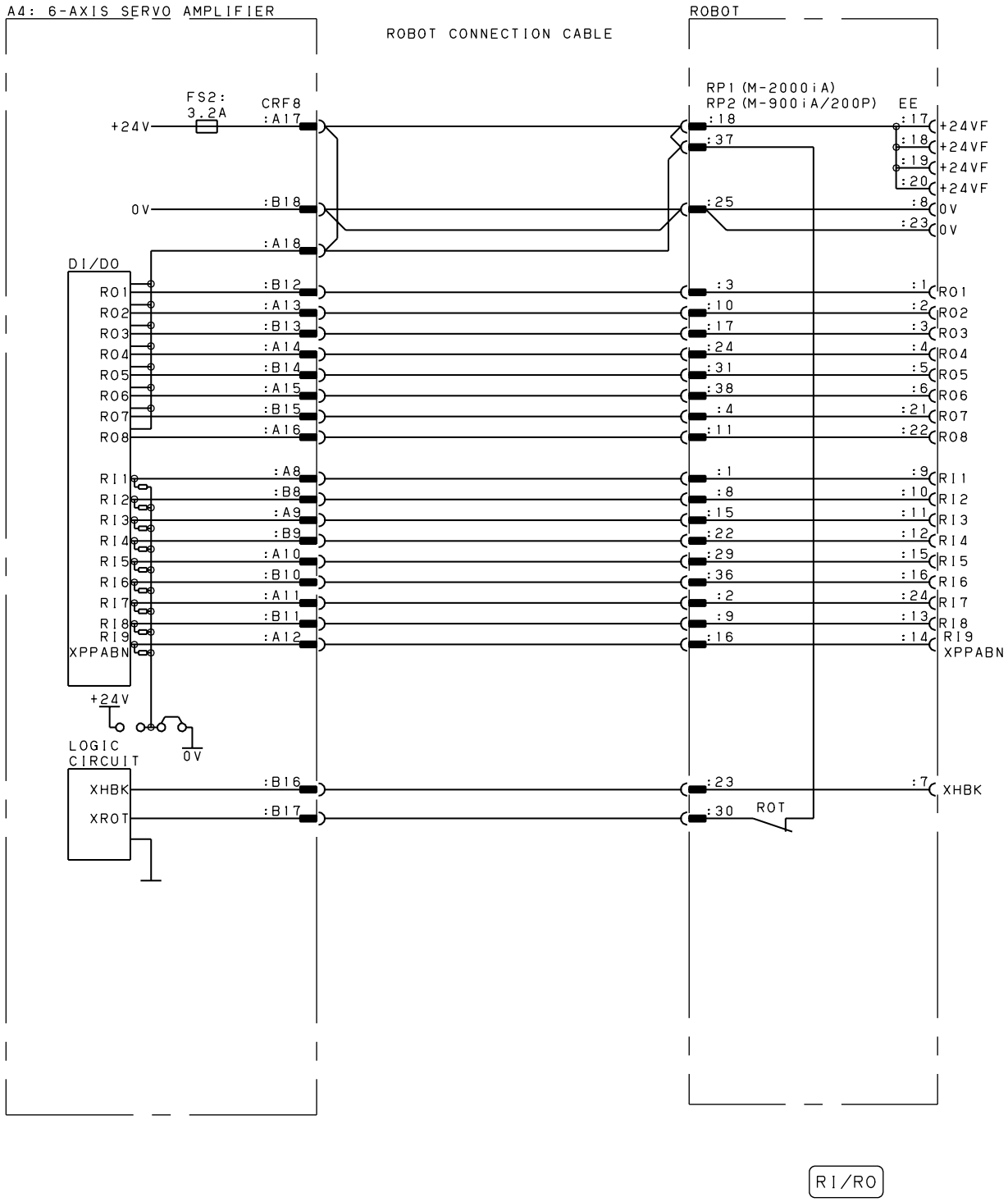

Fig.G.9(x) RI/RO connection diagram (Group 10:M-2000*i*A)

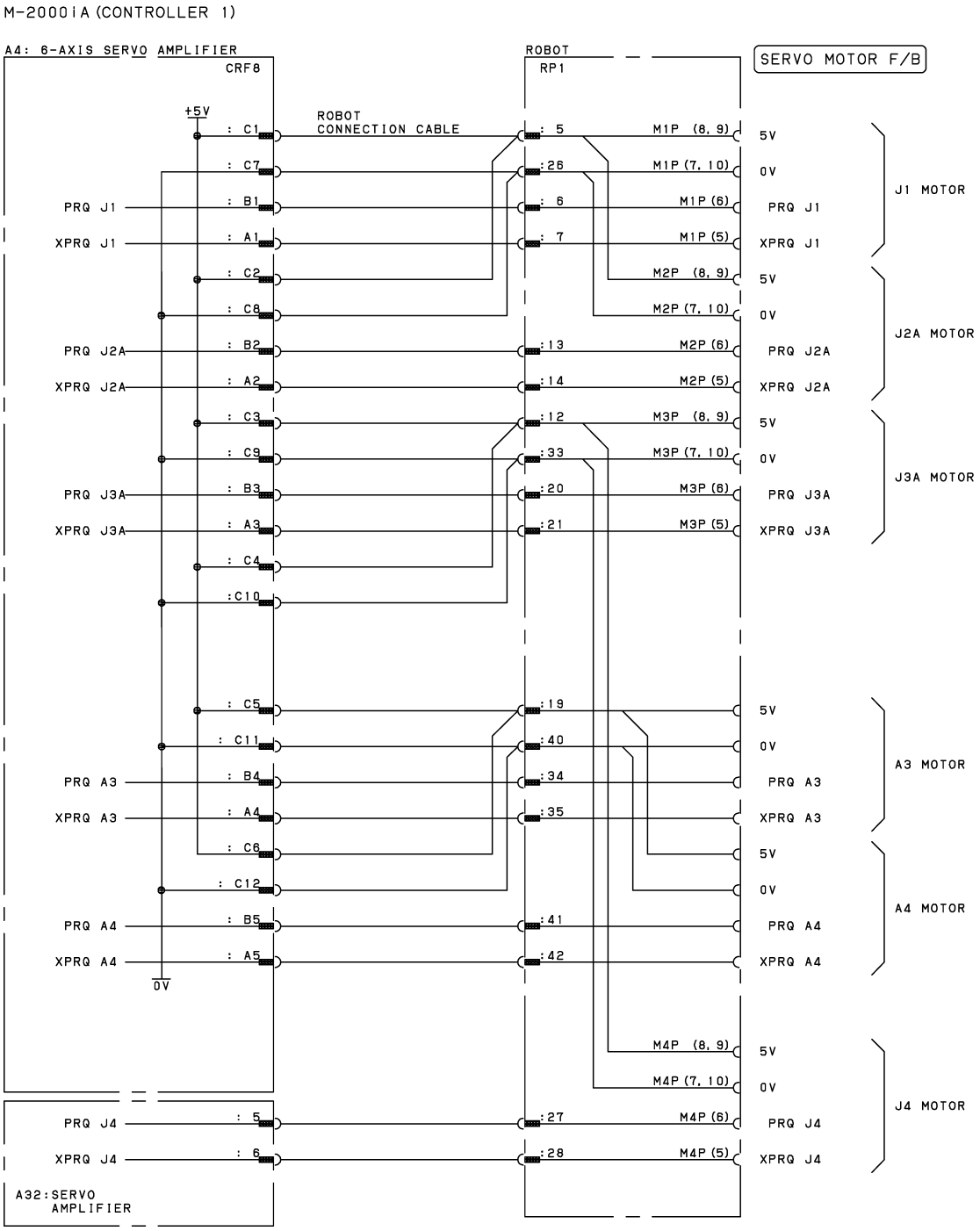

Fig.G.9(y) Pulsecoder signal connection diagram (Group 10:M-2000*i*A, Controller 1)

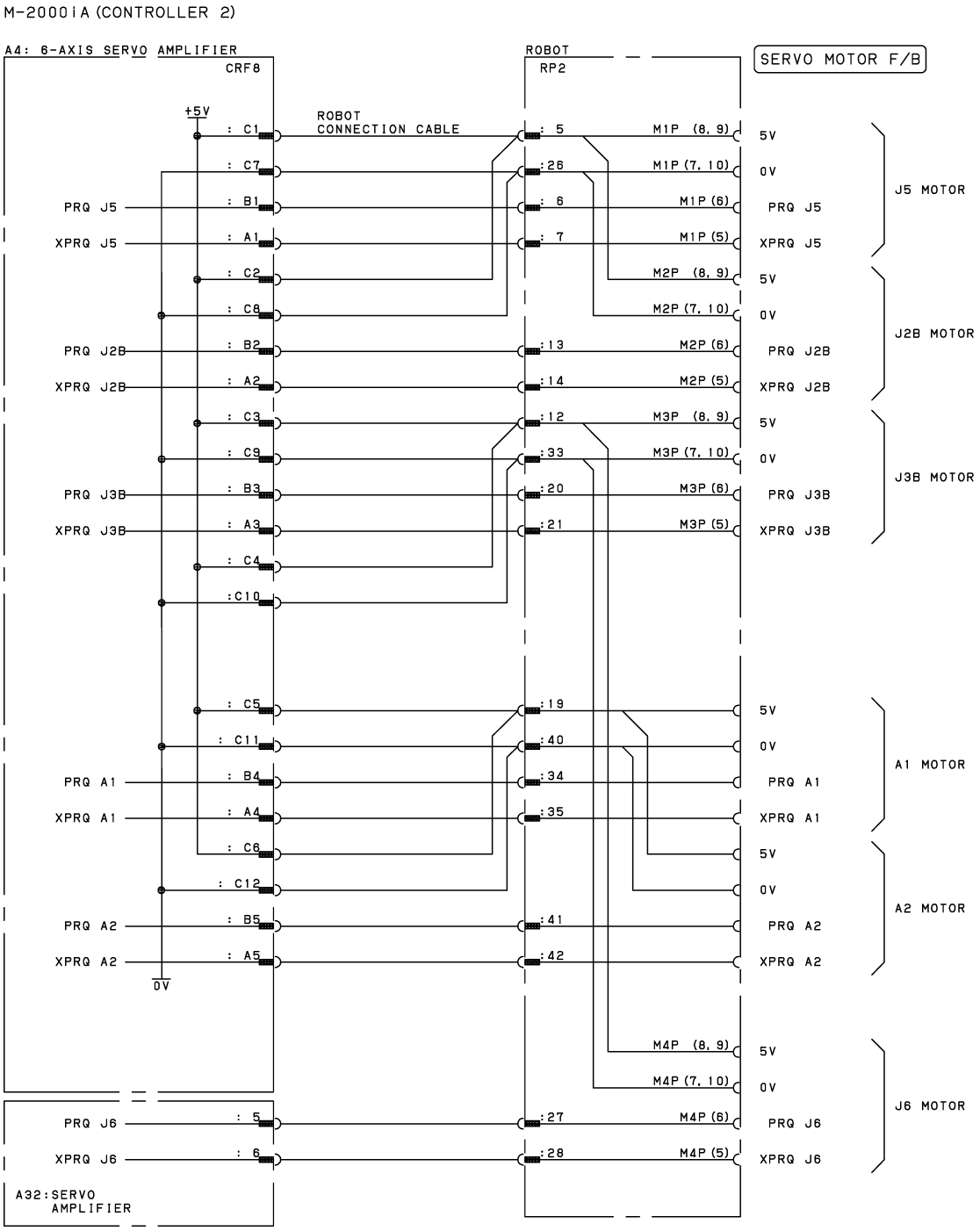

Fig.G.9(z) Pulsecoder signal connection diagram (Group 10:M-2000*i*A, Controller 2)

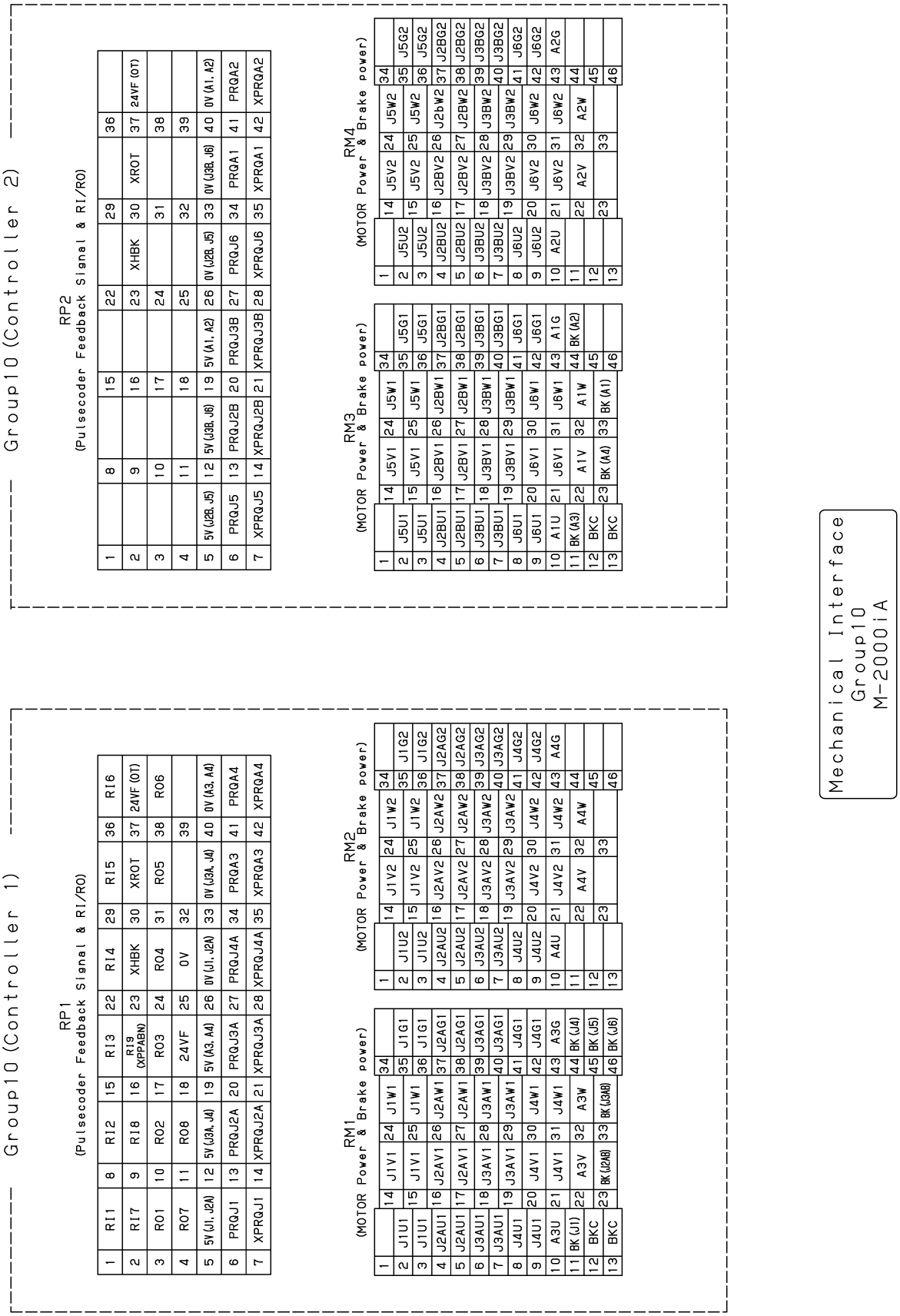

Fig.G.9(aa) Mechanical unit interface (Group 10:M-2000*i*A)

H INSTRUCTION FOR STACKING A-CABINETS

This appendix shows instructions for stacking A-cabinets.

The A-cabinet fixing plate kit (A05B-2601-J342) includes following parts.

- Fixing plate (#A)
- Bolt (M8 (#B))
- NUT (M8 (#C))

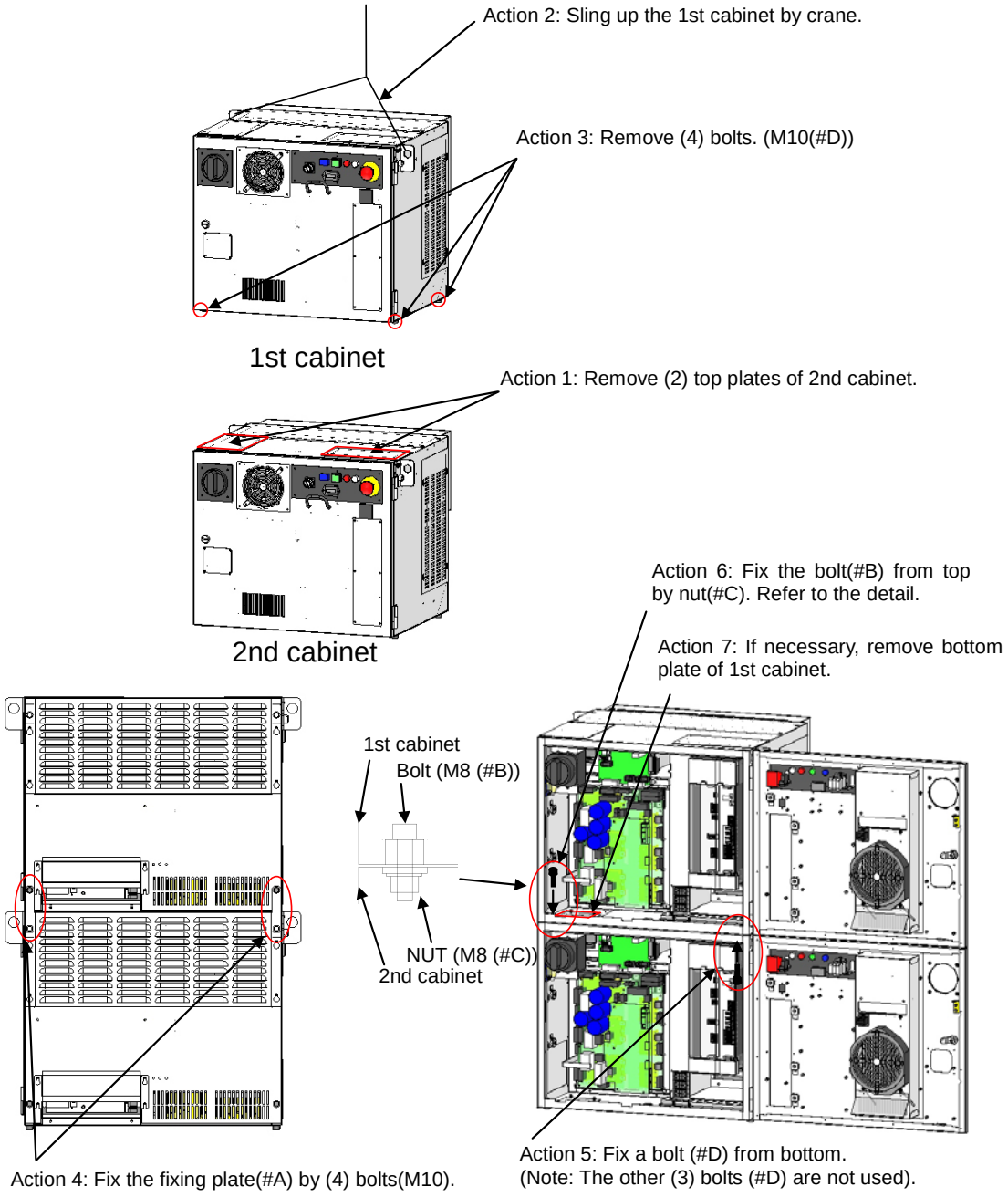

⚠ WARNING
In case stacking controllers, take countermeasure against overturning.

I TEACH PENDANT DISCONNECT FUNCTION (OPTION)

This appendix shows instructions for the teach pendant disconnect function (Option).

I.1 CONFIGURATION

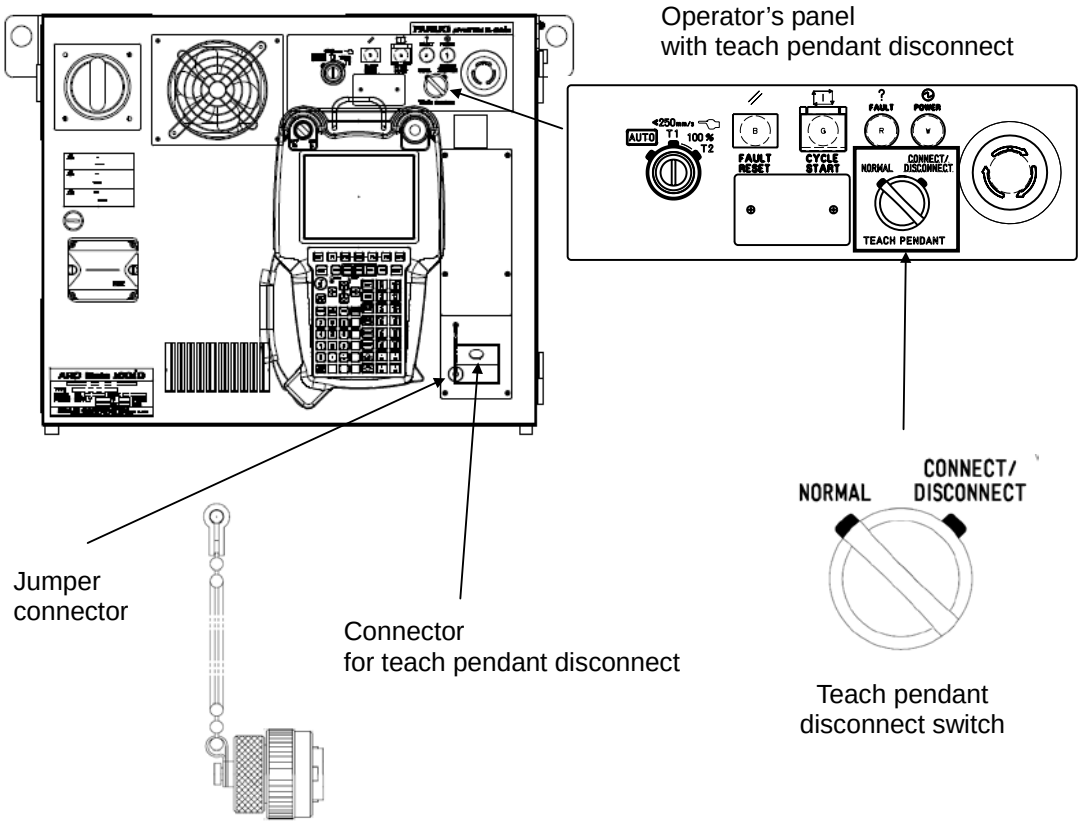

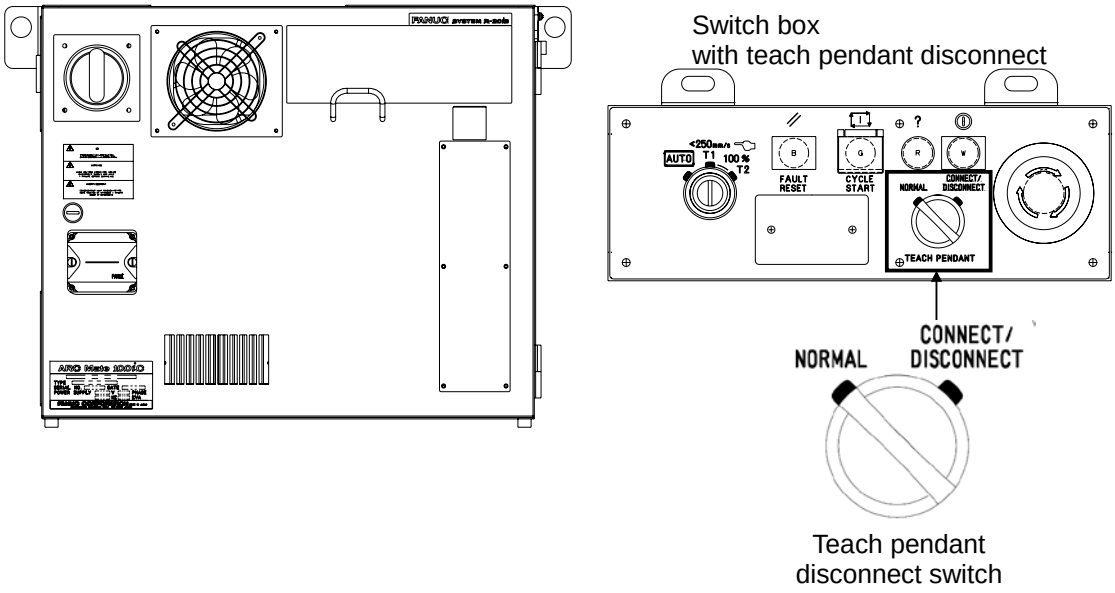

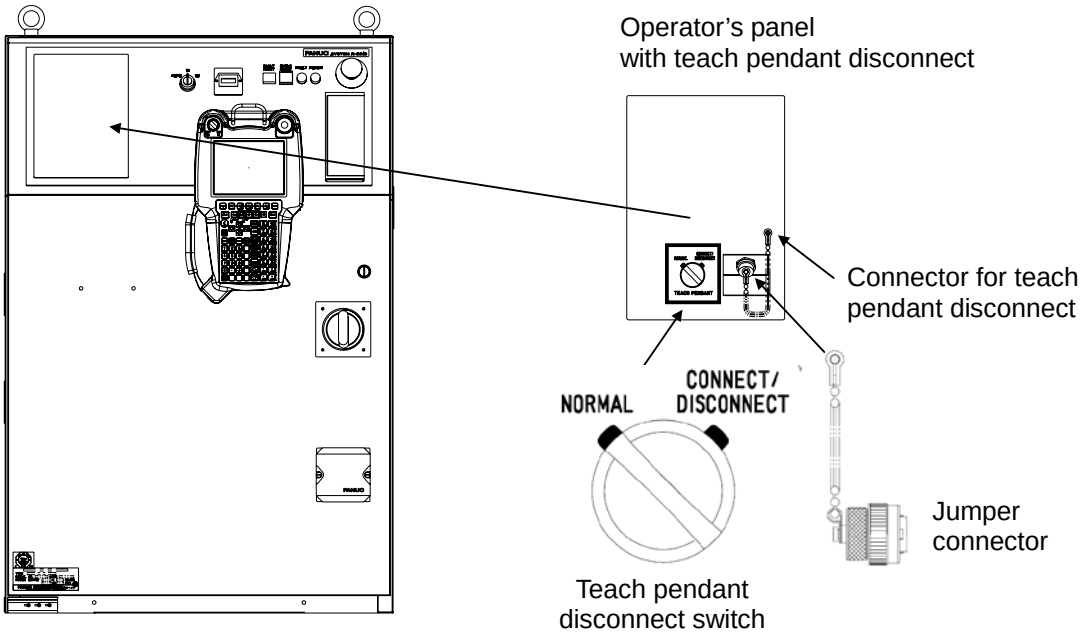

Fig. I.1(a) Teach pendant disconnect function

I.2 PROCEDURE OF TEACH PENDANT DISCONNECT

I.2.1 Teach Pendant Disconnect

(1) Set AUTO mode.
(2) Turn the disconnect switch to "Connect/Disconnect" position. (Robot stops because Operator's panel E-stop Alarm occurs and Power LED of the teach pendant is OFF.)
(3) Disconnect the teach pendant cable.
(4) Connect the jumper connector.
(5) Turn the disconnect switch to "Normal" position.
(6) Administrator should store the teach pendant and the teach pendant cable in the storage in order to avoid incorrect operation.

I.2.2 Teach Pendant Connect

(1) Set AUTO mode.
(2) Turn the disconnect switch to "Connect/Disconnect" position. (Robot stops because Operator's panel E-stop Alarm occurs.)
(3) Disconnect the jumper connector.
(4) Connect the teach pendant cable with the teach pendant.
(5) Turn the disconnect switch to "Normal" position.

⚠WARNING

When the LED (POWER) on the teach pendant turned on, this teach pendant is connected to the robot controller and emergency stop button of the teach pendant is active.

When the LED (POWER) on the teach pendant turned off, This teach pendant is not connected to robot controller and emergency stop button of the teach pendant is not inactive.

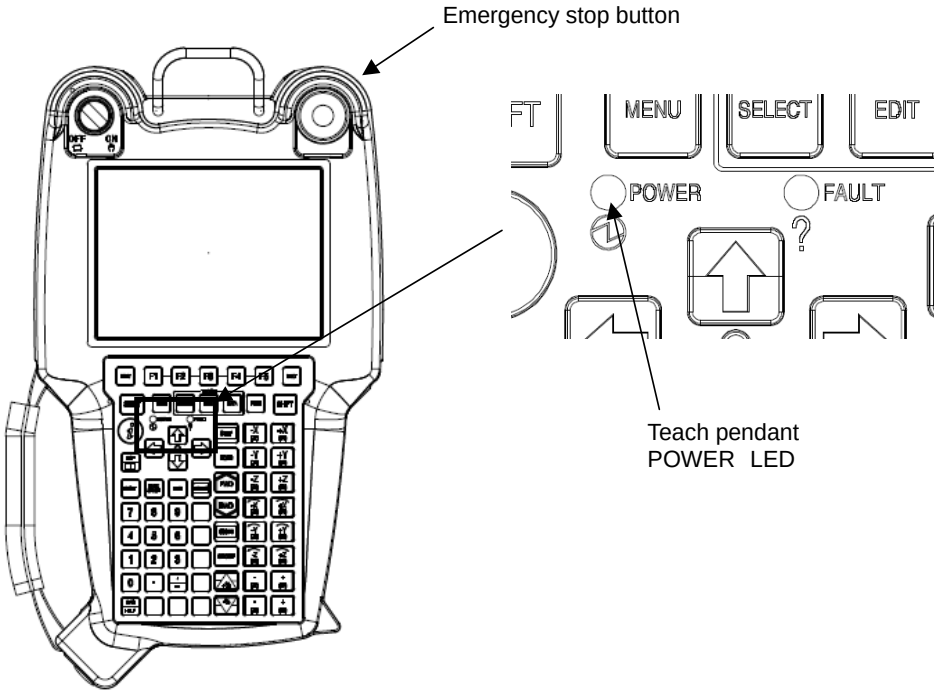

J INSTRUCTION FOR TERMINAL BLOCK

This appendix shows instructions for working with the external on/off and external emergency stop signal input/output terminal block.

Stripping of Wire

Available wire size AWG 28 -14 (0.08 - 1.5mm^2)

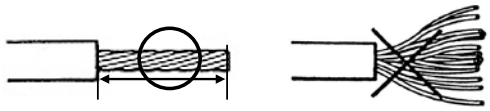

- Please check a strip length carefully.
- Please readjust a loose end.

Handling of the lever

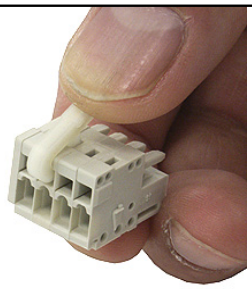

- Hold the connector, and push down the lever by finger.
- Don't handle the lever after fit the connector into PCB, otherwise PCB will be damaged by handling stress.

Operating Lever
Item No. **734-230**

Wiring

1. Push down the lever.

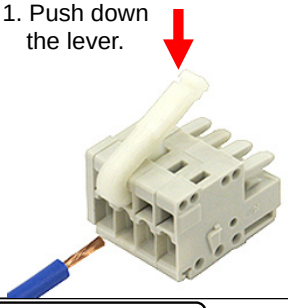

2.Insert a wire into the wire hole with holding the lever.

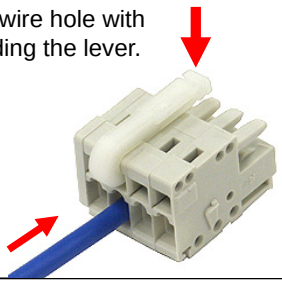

3.Release an operating tool. Pull a wire slightly to check if connecting has been done completely.

★ Don't pull strongly.

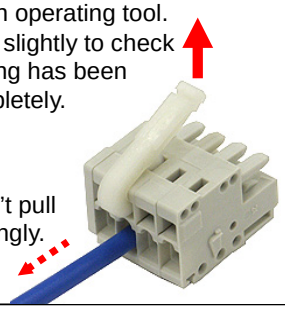

Replace the lever

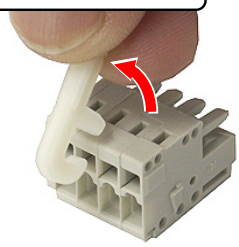

1.Pull of the lever.

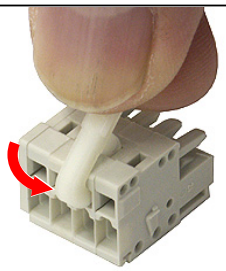

2.Hook the lever to the rectangle hole.

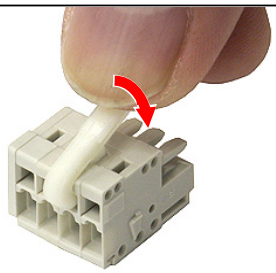

3.Push down the lever until click in.

Fit to header

1.Push in the connector to the header.

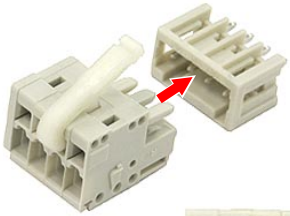

★ Be careful to fit the shape of each other.

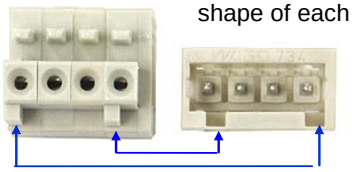

2.Please check if the latch is hooked to header.

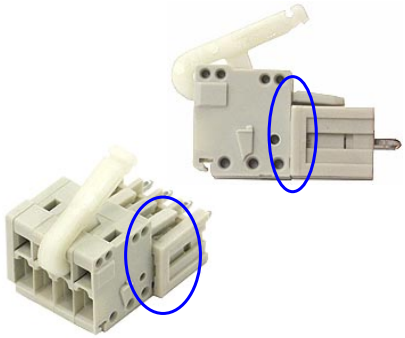

Installation of Jumper

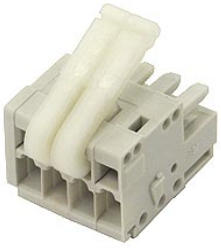

1. Attach two levers to the connector.

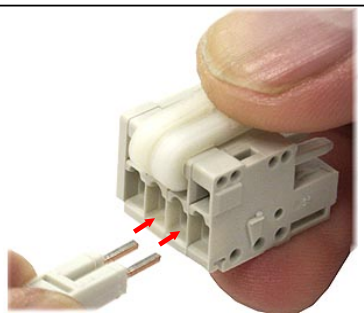

2.Hold down levers at the same time, then put the jumper into the connector.

★ Please confirm that the jumper is fully inserted.

Availability of wires

Without jumpers

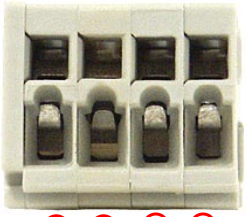

○ ○ ○ ○

Max wire size 1.0mm^2 (AWG18) (with Ferrule)

With jumpers

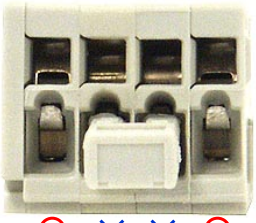

○ × × ○

The wire cannot connect, when attached the jumper.

Installation of Ferrules

1.Put a wire through the hole of ferrules.

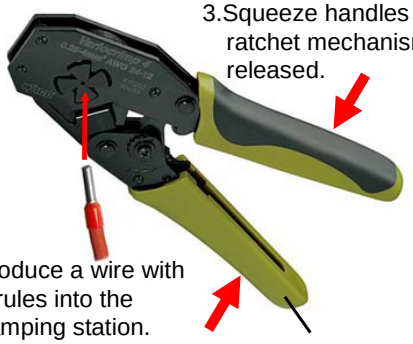

3.Squeeze handles until ratchet mechanism is released.

2.Introduce a wire with ferrules into the cramping station.

4.Please check if the wire crimped correctly.

Specifications of Ferrules

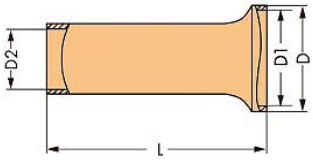

WAGO Item No.	Sleeve for mm^2 (AWG)	Color	Stripped length(mm)	L (mm)	L1	D	D1	D2
216-301	0.25 (24)	Yellow	9.5	12.5	8.0	2.5	2.0	0.8
216-302	0.34 (24)	Turquoise	9.5	12.5	8.0	2.5	2.0	0.8
216-201	0.5 (22)	White	9.5	13.5	8.0	3.0	2.5	1.1
216-202	0.75 (20)	Gray	10.0	14.0	8.0	3.3	2.8	1.3
216-203	1.0 (18)	Red	10.0	14.5	8.0	3.6	3.0	1.5

Pack-unit 100

★ **CAUTION!** Please make sure to use WAGO 206-204 to crimp the ferrules.

K SEALING OF THE CABLE ENTRANCE OF THE CABINET

K.1 CABLE ENTRANCE FOR A-CABINET

The external cables are connected through the cable entrance located on the rear surface of controller. The cable entrance consists of a hood, frame and Cable Seal Block with multiple circular shaped holes for cable sealing. There are different types of Cable Seal Block; the type used is determined by the controller and robot configuration. When all customer supplied cables are connected through the cable entrance, it may be necessary to increase the cable diameter of some cables to maintain an adequate seal at the cable entrance. It is also necessary to confirm Cable Seal Block has enough holes for all system and option cables. The number of available sealing holes for customer supplied cables varies depending on robot type and options. Reference the following illustrations.

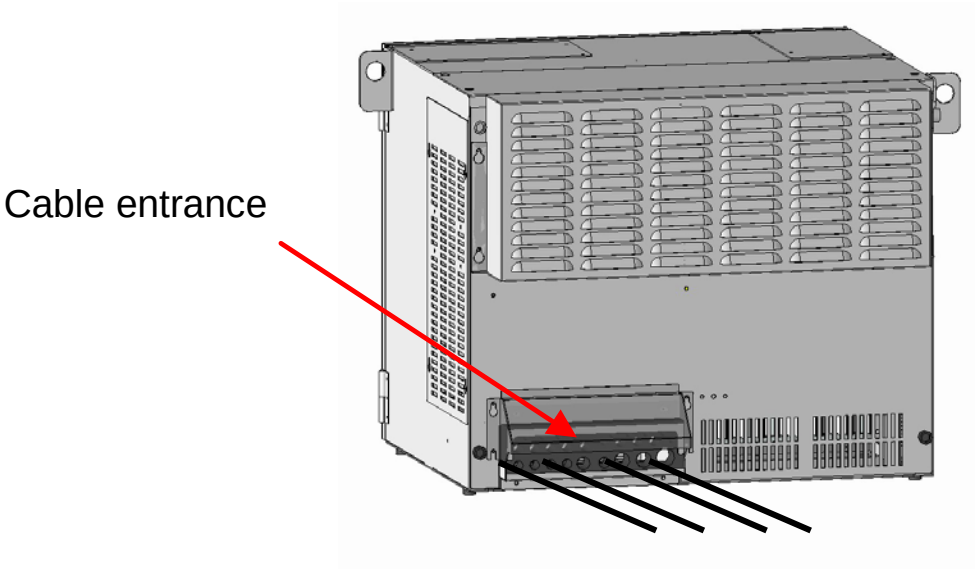

⚠ **CAUTION**
If the cable diameter is not suitable for the hole size of Cable Seal Block, controller problems may occur because of insufficient environmental sealing of controller.
Without proper cable entrance sealing, airborne contaminates, both non-conductive and conductive may enter the interior of the controller. Foreign particulate entering the controller can have an impact on controller operation and reliability.
When customer supplied cables are connected through the cable seal entrance, the diameter of these cables should be adjusted to a suitable cable diameter to ensure proper controller cabinet sealing. Reference the following illustrations.

K.2 HOLES OF CABLE SEAL BLOCK FOR CABLE

The cutout of Cable Seal Block at the cable Entrance is shown as follows（Rear side view）.

Type A(A230-0653-X028#A) : R-2000*i*B(except 200T/220U/220US) , R-2000*i*C(except 210L/220U/270F), R-1000*i*A(excpet 120F-7B/130F), M-710*i*C, M-420*i*A

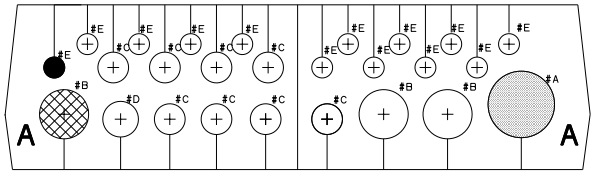

Type B(A230-0653-X028#B) : M-900*i*A/260L/350, M-410*i*B(Separated), M-410*i*C(Separated), R-2000*i*B/200T/220U/220US, R-2000*i*C/ 210L/220U/270F, M-2000*i*A

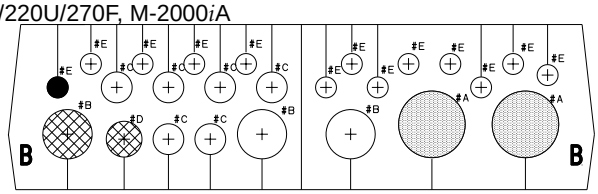

Type C(A230-0653-X028#C) : ARC Mate series, M-430*i*A, F-200*i*B, M-10*i*A, M-10*i*D, M-20*i*A, M-20*i*B, M-20*i*D, CR-4*i*A, CR-7*i*A, CR-15*i*A, CR-35*i*A, LR Mate 200*i*D

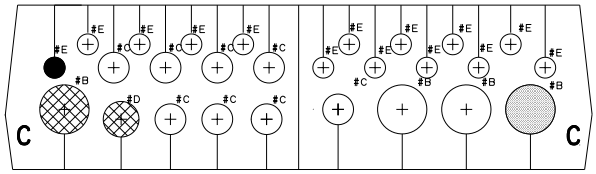

Type D(A230-0653-X028#D) : M-410*i*C(Integrated)

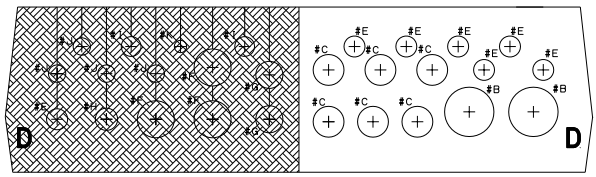

Type K(A230-0653-X028#K) : R-1000*i*A/120F-7B/130F

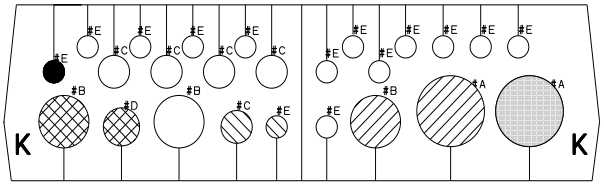

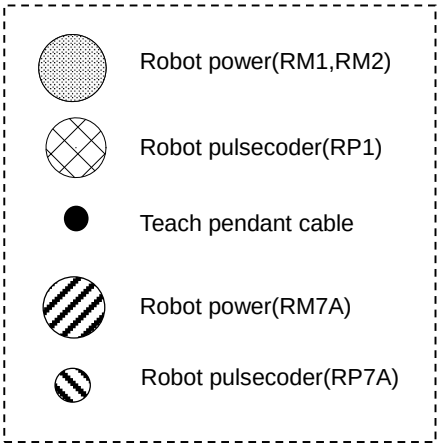

Hole type	Diameter	Type A		Type B		Type C		Type D		Type K		Application（Include options）
		Qty	For Options	Qty	For Options	Qty	For Options	Qty	For Options	Qty	For Options	
#A	φ27mm	1	0	2	0	0	0	0	0	2	0	Robot power (RM1,RM2,RM7A)
#B	φ20mm	3	2	3	2	4	2	2	2	3	1	Robot Pulsecoder Thick/Flex(RP1) Robot power(RM1,RM7A)
#C	φ12.5mm	8	8	6	6	8	8	6	6	5	4	Robot Pulsecoder(RP7A) Aux axis power, I/O Line tracking, Switch box DeviceNet Thick cable
#D	φ14.5mm	1	0	1	0	1	0	0	0	1	0	Robot Pulsecoder(RP1)
#E	φ8.5mm	13	12	13	12	14	13	7	6	14	12	Aux brake/Pulsecoder Robot Pulsecoder (RP7A) Camera, Ethernet DeviceNet Thin cable Teach pendant cable

K.3 SUITABLE CABLE DIAMETER

The suitable cable diameter for option cables are shown on the following table.

Hole type	Nominal	Tolerance	Suitable diameter	Q'ty Type A	Q'ty Type B	Q'ty Type C	Q'ty Type D	Q'ty Type K
#B	ϕ20mm	±1mm	ϕ19mm-21mm	2	2	2	2	1
#C	ϕ12.5mm	±1mm	ϕ11.5mm-13.5mm	8	6	8	6	4
#E	ϕ8.5mm	±1mm	ϕ7.5mm-9.5mm	12	12	13	6	12

NOTE

The holes for options(#B,#C,#E) are used for all options(Aux. axis, I/O, Network, Sensor). So confirm that the available holes are enough for all option cables.

K.4 ADJUST THE CABLE DIAMETER

To maintain proper sealing of controller enclosure, it may be necessary to adjust some cable diameters to work with an available cable port diameter. If the diameter of any cable is smaller than an available sealing port in the Cable Seal Block, increase the cable diameter to an appropriate diameter by applying acetate tape, adhesive sealing tape or heat shrink tubing over the cable jacket. If a foam type sealing tape is used, adjust the diameter to the compression state of foam for a particular cable diameter. The finished diameter of all cables should maintain an interference fit with Cable Seal Block. All unused cable ports must be plugged to ensure controller is sealed against contaminants. Sealing frame and hood must also be properly installed.

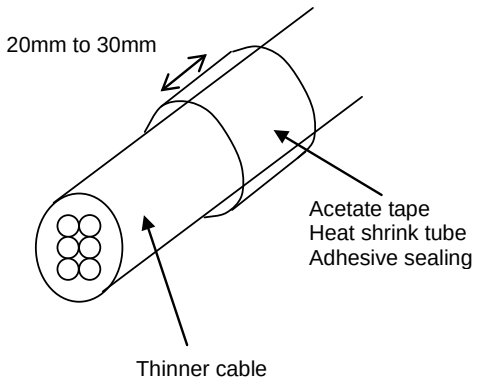

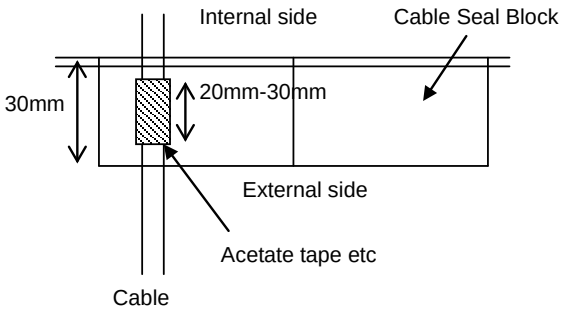

L REPLACING THE PROTECTION SHEET

This appendix shows instructions for replacing the protection sheet of the *i*Pendant with touch panel.

Replacement procedure

1. Remove the old protection sheet.
2. Peel clear sheets pasted on both sides of the new protect sheet.
3. Paste the new protection sheet so that the cutout part is placed on the lower right portion.

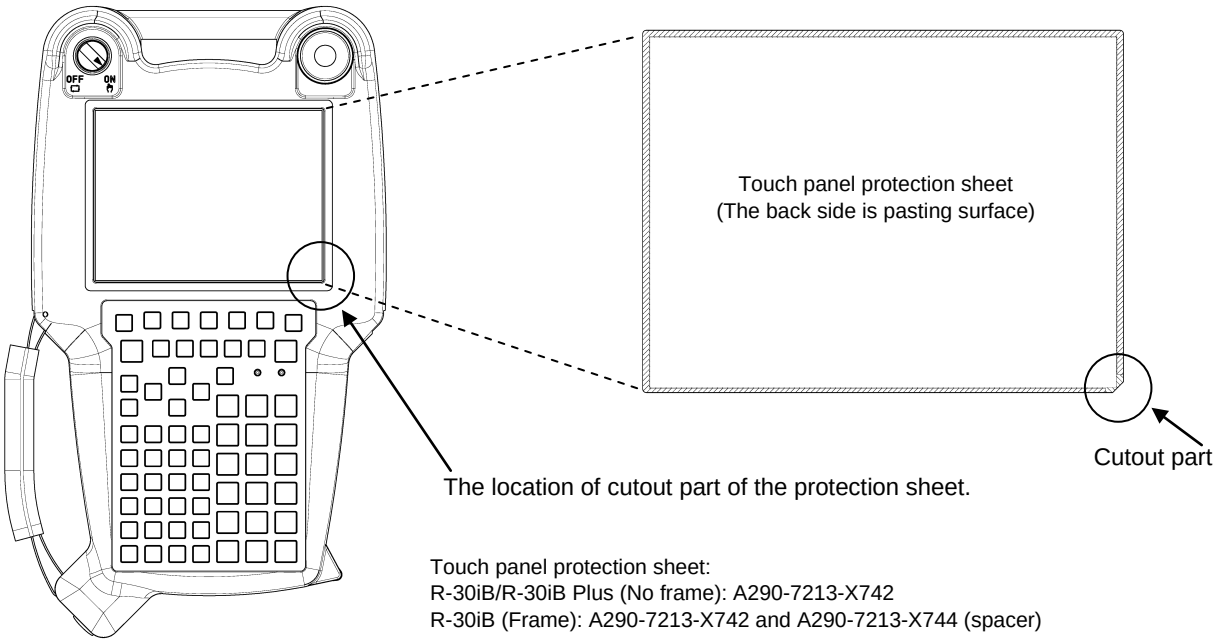

Touch panel protection sheet:
R-30iB/R-30iB Plus (No frame): A290-7213-X742
R-30iB (Frame): A290-7213-X742 and A290-7213-X744 (spacer)

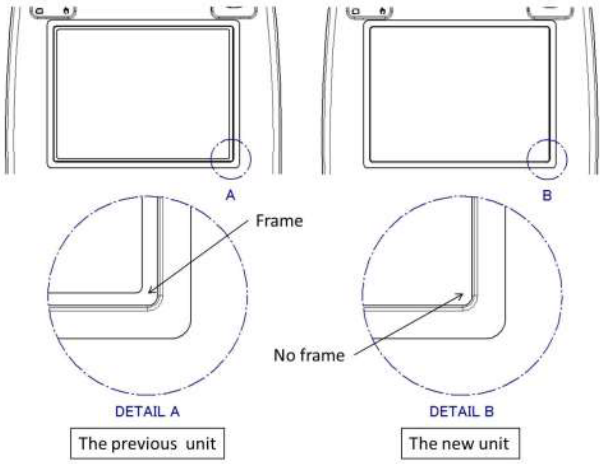

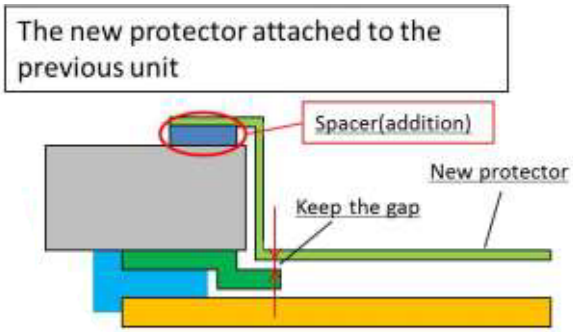

M FLEX CABLE CONDITION

M.1 MINIMUM BEND RADIUS OF CABLE

The minimum bend radius of Flex Cable is 200(mm).

M.2 FLEX CABLE

Flex cable must be used with cable carrier for moving part. The problem such as shortening of the longevity of Cable if Cable carrier is not used occurs.

M.3 CABLE CARRIER

Cable carrier

1 The radius (R) of cable carrier should be more than 200mm.
2 The cable should be Non-Flex to cable carrier by using the clamp. (e.g. Rubber packing)
3 The size of hole to support cable inside cable carrier should be more than 110% of cable size and should have more than 3mm gap.
4 The cable should be mounted inside cable carrier without twisting.

M.4 CABLE DURABILITY TEST

The result of cable durability test (U form bending test) is indicated as follows.

1 Tighten the two places of the cable as shown in Fig.M.4(a) and make sure there is no movement between wire cores and between wire core and shield. Repeat the parallel movement of cable in the left/right direction.
2 Count the times of parallel movement (one round trip as one time).
3 Connect all wires and shield in series, and measure the resistance of wire and shield.
If resistance of wire and shield is 20% larger than initial resistance, the test is regarded as failure.

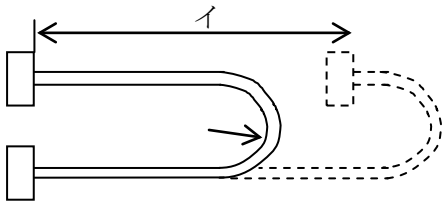

Fig M.4 (a) Cable durability test

M.5 EXPERIMENTAL RESULT

Experimental results are as follows.

Table M.5 Experimental results

Material No.	Point	Result after 500,000 times	
		Resistance up (%)	Sample dismantlement result
No.1	Wire	0	There is no disconnection
	Shield	0	
No.2	Wire	0	There is no disconnection

M.6 WRING IN THE CABLE CARRIER

NOTE:
- If the precautions described in this section are not fulfilled, meandering or disconnection of cable may occur.
- Confirm the usage and notifications of cable carrier.
- If cutting fluid(oil) or chips are possible to adhered to the cable, use the fully enclosed cable carrier.
- Confirm that the cable is installed without twisting after installation and operation.

1. Partition of cable carrier

Separate each cable by a partition in the cable carrier.
Do not cross the cable or overlap each other.
Select the cable carrier which has enough space and keep cable occupancy to 30% or less. If partition is used, keep the interval 2D or more. And if partition is not used, keep the clearance of each cables D or more. (D is the diameter of cable).

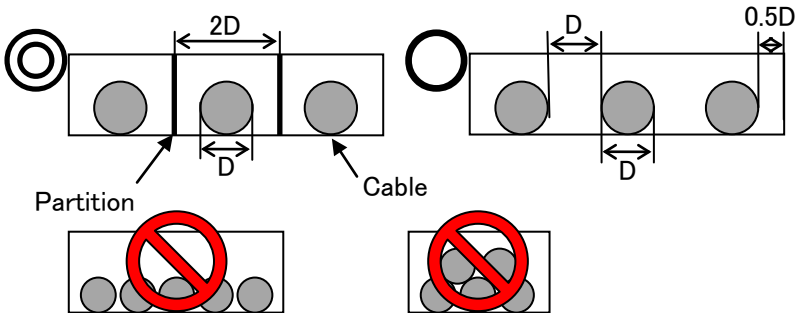

NOTE
In case of below, use the partition.

- In case of mixing with the air hose etc.
  Be sure to separate the cable and the air hose etc. with the partition when the oil pressure and air hose etc. is wired to the cable carrier.

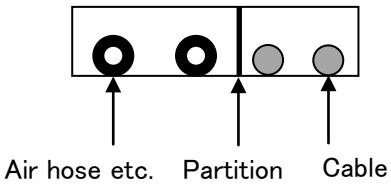

- In case of mixing with the cable of much different thickness
  Since the thick cable affect the thin cable, the thin cable may be occurred the issue.
  Be sure to separate the thin cable and the thick cable with the partition when the cable of much different thickness is wired to the cable carrier.

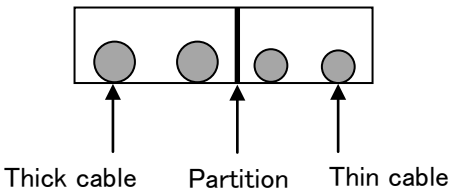

2. Install procedure of cable to the cable carrier

1 Extract the cable with the turntable etc. Confirm that the cable is not twisted and put straight without twisting.

NOTE
Extracting the cable with the turntable etc. as below drawing can avoid twisting of cable.
Extracting straight the cable without the turntable etc. cause meandering or decreasing the bending characteristics because twisting remain in the cable.

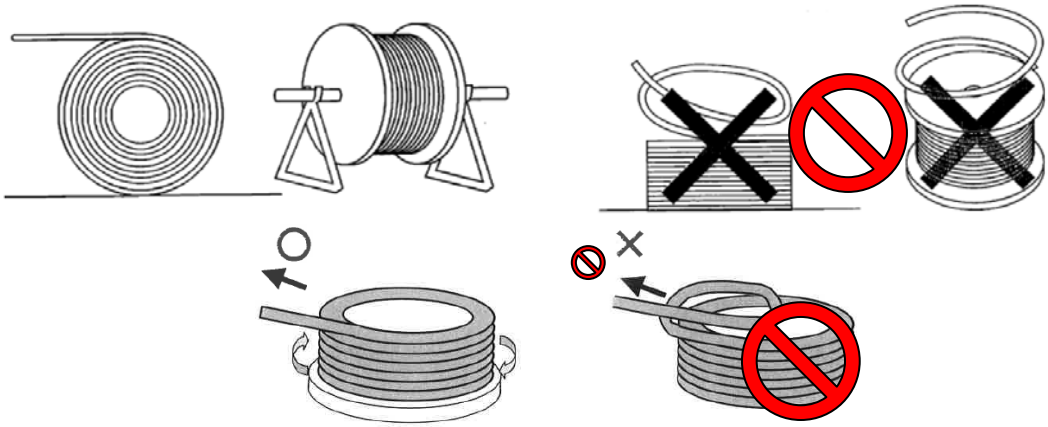

Correct extraction method wrong extraction method

2 Install the cable into the cable carrier without twisting.
3 Install the cable according to name printing or marking on the cable sheath, and confirm that the cable is installed without twisting after installation and operation.

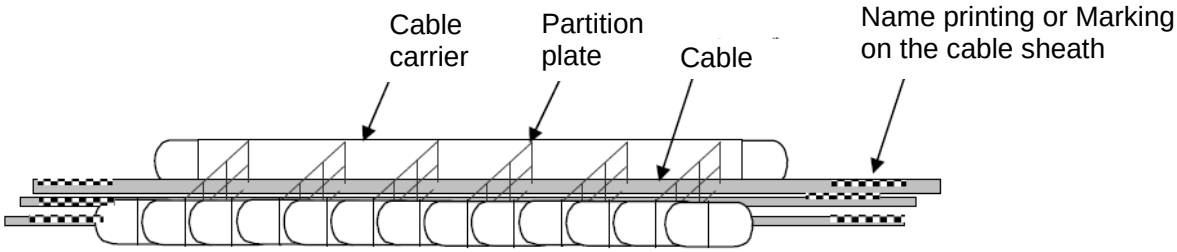

NOTE
Do not tie with other cables in the cable carrier.

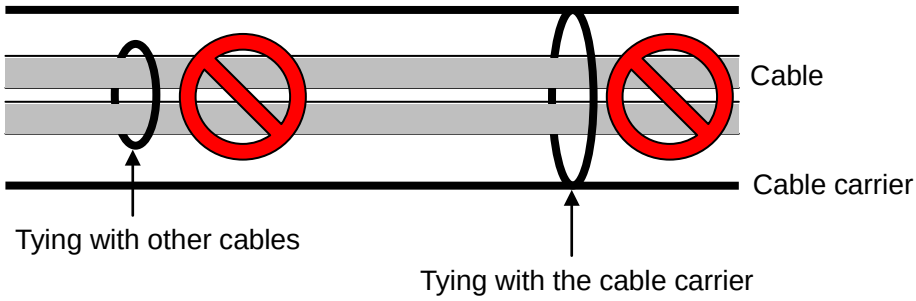

3. Fixing the cable

After installing the cable to cable carrier, fix the cable by the following procedure.

1 Fixing the cable at the upper side
Fix the cable individually at the upper termination side as below drawing.
Do not fix the cable at moving part.
If cable tie is used to fix the cable, recommend to use two set of cable tie.

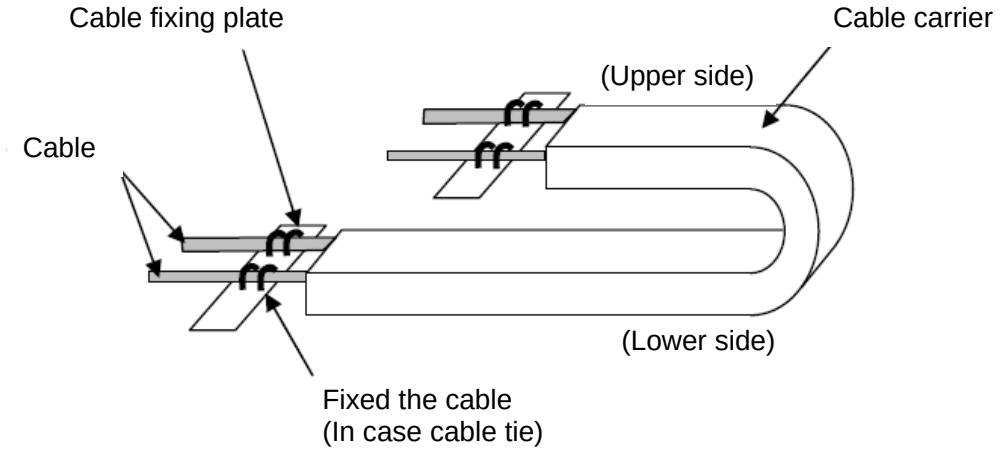

If the cable is fixed at the moving part of cable carrier, the cable life is decreased by stress to the cable.

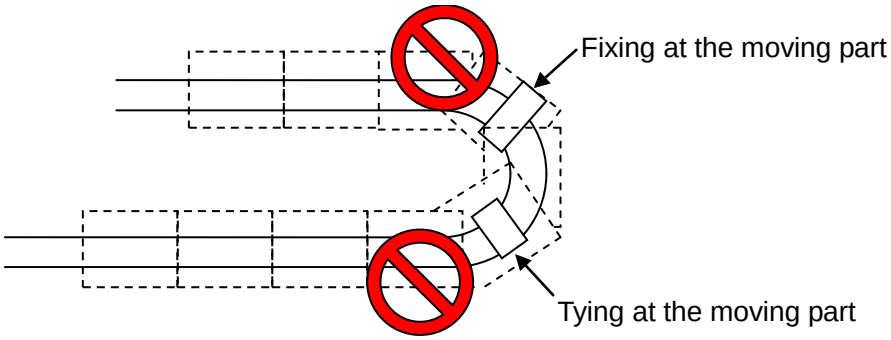

2 Adjusting the cable length
Adjust that the cable is installed with some looseness of the slider direction.
The cable should not contact to the inner surface of the cable carrier at the moving part tightly (Below drawing A).
It becomes easier to adjust to the state of the below drawing A by the adjusting the position of the lower side cable and the adjusting the position of the cable to the middle of the below drawing B and C.
If the cable is too short as the below drawing B or too long as the below drawing C, the cable sheath is damaged because the cable is rubbed the cable carrier and the cable is contacted with the other cables.

Good example (with looseness of the slider direction)

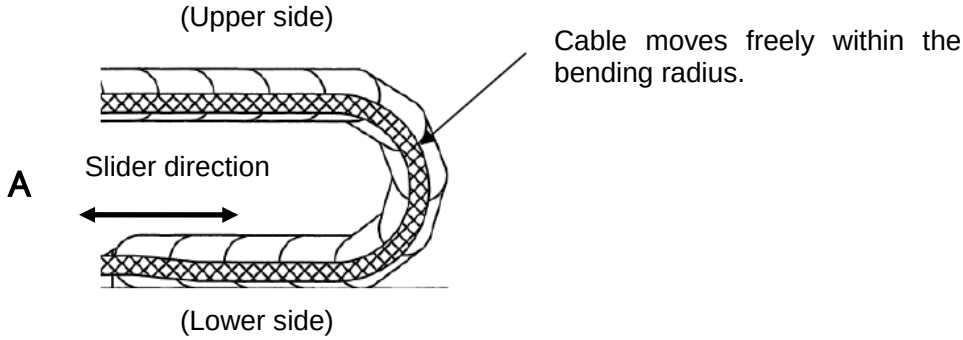

Bad example
(without looseness of the slider direction)

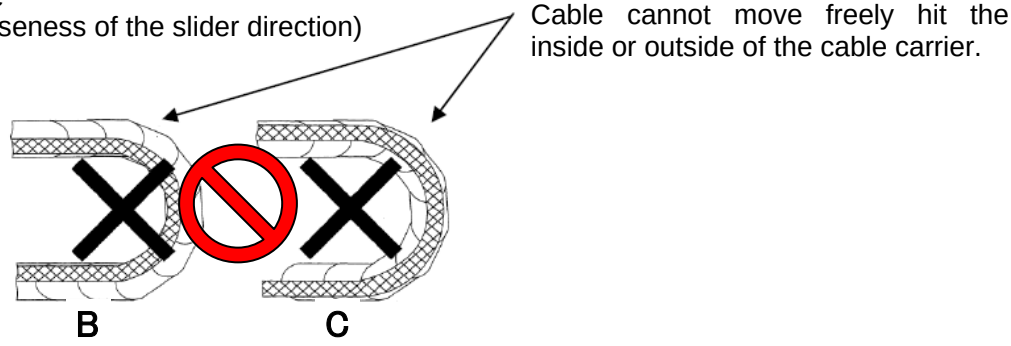

3 Fixing the cable at the lower side
Fix the cable individually at the lower termination side.

INDEX

<Number>

100BASE-TX Connector (CD38A, CD38B) / 1000BASE-T Connector (CD38C) Pin Assignments269
6-AXIS SERVO AMPLIFIER SPECIFICATIONS.....135
6-AXIS SERVO AMPLIFIERS.....132

<A>

ADJUST THE CABLE DIAMETER.....483
ADJUSTMENT AND CHECKS AT INSTALLATION291
ALARM OCCURRENCE SCREEN.....19
Alarms Detected by Servo Amplifier.....432
ARC Weld Connection Cables (CRW11; TE Connectivity 20 pin).....254
Assembly at Installation.....287

<B>

BACKPLANE.....117
Battery for Memory Backup (3 VDC) 170
BLOCK DIAGRAM 176
BLOCK DIAGRAM OF THE POWER SUPPLY 138
BRAKE RELEASE UNIT 417

<C>

CABLE CARRIER 485
Cable connection diagram of the I/O Link cable by using JRL8 connector.....182
Cable connection diagram of the I/O Link cable when using JD1A connector 180
CABLE CONNECTION FOR THE PERIPHERAL DEVICES, END EFFECTORS, AND ARC WELDERS 255
CABLE DURABILITY TEST.....485
CABLE ENTRANCE FOR A-CABINET 481
CAUTION ON EMC (ELECTROMAGNETIC COMPATIBILITY).....290
Check input voltage.....196
Check Items at Installation.....276
CHECKING THE POWER SUPPLY UNIT (A16B-2203-0910) 143
CHECKS AND MAINTENANCE 13
COMPONENT FUNCTIONS.....11
CONFIGURATION.....4,429,476
CONFIRMATIONS BEFORE OPERATION.....417
CONFIRMATIONS OF ON/OFF BY THE BREAKER FOR M-900*i*A/200P, M-2000*i*A 439
CONNECTING ADDITIONAL SAFETY I/O BOARD441
Connecting HDI 262
Connecting the Auxiliary Axis Brake (CRR65 A/B) ...208
Connecting the Auxiliary Axis Over Travel (CRM68) 209
CONNECTING THE COMMUNICATION UNIT 264
Connecting the External Emergency Stop.....199,440
Connecting the External Power Supply ON/OFF Switch 197
Connecting the Input Power.....193
Connecting the input power cable.....193,438
Connecting the Non-Teaching Enabling (NTED) Signal (CRMA96)(For B-cabinet).....207
CONNECTING THE SENSOR CONNECTION CABLE.....277
Connection between RS232C interface and I/O device265
Connection between the Mechanical Unit and End Effector.....245
Connection between the Process I/O Board KA, KB and Welding Machines.....242
Connection between the Process I/O Board MA and Peripheral Devices.....236
Connection between the Process I/O Board MB and Welding Machines.....240
CONNECTION OF HDI.....262
Connection of I/O Link and I/O Link *i* when Using JRL8 Connector 181
Connection of I/O Link by Using JD1A Connector.....179
Connection of the I/O Link cable by using JD1A connector 180
Connection of the I/O Link cable when using JRL8 connector 181
Connection to Ethernet.....267
CONNECTION TO FANUC I/O LINK AND FANUC I/O LINK *i*.....*179*
CONNECTIONS BETWEEN THE CONTROLLER AND THE MECHANICAL UNIT AND OTHER GENERAL CONTROLLER CONNECTIONS 177

<D>

DIGITAL I/O SIGNAL SPECIFICATIONS 247
DIMENSION 424

<E>

EE INTERFACE.....245,249
ELECTRICAL CONNECTIONS 177
Electrical Noise Countermeasures 272
EMERGENCY STOP BOARD A-cabinet:A20B-2200-0650/B-cabinet:A20B-2102-0050.....117
End Effector Cable Connector (EE interface).....260
Ethernet Interface.....267
EXPERIMENTAL RESULT 485
EXTERNAL CABLE WIRING DIAGRAM.....183
EXTERNAL VIEW OF THE CONTROLLER 4

<F>

FLEX CABLE 485
FLEX CABLE CONDITION.....485
FUSE.....426
FUSE-BASED TROUBLESHOOTING.....83

<H>

HOLES OF CABLE SEAL BLOCK FOR CABLE.....482

HOW TO CONNECT THE PLUG TO THE POWER CABLE (IN CASE OF NO POWER PLUG) 423
How to Disable/Enable HBK 292
How to Disable/Enable Pneumatic Pressure Alarm (PPABN) 293
HOW TO SECURE THE COMPACT FLASH MEMORY CARD TO THE MAIN BOARD.....427

<I>

I/O Signal Specifications for ARC-Welding Interface (A-cabinet/Process I/O Board MB) 250
I/O SIGNALS.....406
In case of A-cabinet 216
In case of B-cabinet.....217,218
In Case of Operating to the Robot.....419
Input Signal Rules for the High-speed Skip (HDI) 263
Input Signals 406
Input/Output Hardware Usable in the R-30*i*B/R-30*i*B Plus Controller.....412
INSTALLATION.....280
INSTALLATION CONDITIONS.....288
Installation Method 280
INSTALLING THE CONNECTION CABLE BETWEEN CABINETS.....434
INSTRUCTION FOR STACKING A-CABINETS 475
INSTRUCTION FOR TERMINAL BLOCK.....479
Interface 264
INTERFACE FOR PERIPHERAL DEVICES 223
INTERFACE FOR WELDER.....240

<L>

Leading out the Ethernet Cable.....268
Leakage breaker 196
LEDS OF 6-AXIS SERVO AMPLIFIER 133
LEDS ON UNITS SUPPORTING I/O Link *i* *106*

<M>

MAIN BOARD 113
MANUAL OPERATION IMPOSSIBLE.....106
MASTERING 23
Meanings of LEDs on Units Supporting I/O Link *i* *106*
MINIMUM BEND RADIUS OF CABLE 485

<O>

ON/OFF timing by the breaker 196
OPERATION 419
OPTICAL FIBER CABLE.....414
Output Signals.....409
OVERVIEW 3,175,412

<P>

PACKAGE.....279
Peripheral Device and Controller Connection (Source Type DO).....223
Peripheral Device Cable Connector 257
Peripheral Device Connection Cable 255
Peripheral Device Interface A 247
Peripheral Device Interface A Cable (CRMA5*: Honda Tsushin, 50 pins) 253
Peripheral Device Interface B Cable (CRMA6*: Honda Tsushin, 20 pins) 253
Peripheral Device Interface B1 and B2 Cables (CRMA52; TE Connectivity 30 pin).....254
PERIPHERAL DEVICE INTERFACE BLOCK DIAGRAM.....213
Peripheral Device Interface Processing.....292
PERIPHERAL DEVICE, ARC WELDING, AND EE INTERFACES.....210
POWER CANNOT BE TURNED ON 15
POWER SUPPLY 138
PREFACE p-1
PRINTED CIRCUIT BOARDS.....113
PROCEDURE OF TEACH PENDANT DISCONNECT 477
PROCESS I/O BOARD JA (A16B-2204-0010) 118
PROCESS I/O BOARD JB (A16B-2204-0011).....120
PROCESS I/O BOARD KA (A20B-2101-0560) 126
PROCESS I/O BOARD KB (A20B-2101-0561) 129
PROCESS I/O BOARD MA (A20B-2004-0380, A20B-2004-0381) 123
PROCESS I/O BOARD MB (A20B-2101-0730, A20B-2101-0731) 125
PROCESS I/O BOARD SIGNALS.....218

<R>

Recommended Cables.....261
Relationship of Axis.....433
Releasing the Brake of an Auxiliary Axis.....422
REPLACING 6-AXIS SERVO AMPLIFIERS.....160
Replacing a Module 164
REPLACING CARDS AND MODULES ON THE MAIN BOARD 148
Replacing External Fan Unit and Door Fan (B-cabinet)169
REPLACING I/O UNIT-MODEL A 164
Replacing Rear Fan Unit (A-cabinet).....168
REPLACING THE AC FAN MOTOR.....167
Replacing the Backplane Board (Unit) 146
Replacing the Base Unit of I/O Unit-MODEL A 164
REPLACING THE BATTERY 170
REPLACING THE CONTROL SECTION FAN MOTOR 166
REPLACING THE DISCHARGE RESISTOR UNIT.157
REPLACING THE EMERGENCY STOP BOARD ...154
REPLACING THE E-STOP UNIT.....153
Replacing the Heat Exchanger and Door Fan Unit (A-cabinet) 167
Replacing the Power Unit and Printed-Circuit Boards on the Backplane 146
REPLACING THE PRINTED-CIRCUIT BOARDS...145
REPLACING THE PROTECTION SHEET.....484
REPLACING THE TEACH PENDANT.....165
REPLACING THE TRANSFORMER 154
REPLACING UNITS.....145
Resetting Overtravel 292

RESETTING OVERTRAVEL AND EMERGENCY STOP AT INSTALLATION 291
ROBOT CONNECTION CABLE 435
Robot Connection Cables 183
RS232C Interface 264
RS232C interface signals 265

<S>

SAFETY PRECAUTIONS s-1,417
SEALING OF THE CABLE ENTRANCE OF THE CABINET 481
SENSOR I/F UNIT FOR COLLABORATIVE ROBOT 144
SETTING COMMON VOLTAGE 406
SETTING OF 6-AXIS SERVO AMPLIFIER 134
SIGNAL 404
Software Specifications 413
SPECIFICATION LIST 297
SPECIFICATIONS 426
SPECIFICATIONS OF DIGITAL INPUT/OUTPUT 412
SPECIFICATIONS OF PERIPHERAL DEVICE INTERFACE 404
SPECIFICATIONS OF THE CABLES USED FOR PERIPHERAL DEVICES AND WELDERS 253
Status indication of the I/O Link *i* *104*
Status indications of the distributed Link 105
STOP SIGNALS 22
SUITABLE CABLE DIAMETER 483

<T>

Teach Pendant Cable 192
Teach Pendant Connect 477
Teach Pendant Disconnect 477
TEACH PENDANT DISCONNECT FUNCTION (OPTION) 476
THE CONTROLLER FOR M-900*i*A/200P, M-2000*i*A 429
TOTAL CONNECTION DIAGRAM 348,442
TRANSFORMER 140
TRANSPORTATION 278
TRANSPORTATION AND INSTALLATION 278
TROUBLESHOOTING 15
TROUBLESHOOTING BASED ON LED INDICATIONS 90
Troubleshooting by Alarm LEDs on the Process I/O Board 98
Troubleshooting by LED on the Emergency Stop Board 96
Troubleshooting by LEDs on Power Supply Unit 94
Troubleshooting by LEDs on the α*i*PS 102
Troubleshooting by LEDs on the α*i*SV 106
Troubleshooting by LEDs on the 6-Axis Servo Amplifier 100
Troubleshooting by LEDs on the Sensor I/F Unit for Collaborative Robot 104
TROUBLESHOOTING USING THE ALARM CODE 25,431
Troubleshooting Using the LEDS on the Main Board ... 90
Twisted-pair Cable Specification 269

<W>

When I/O Unit-MODEL A is Used 216
When Process I/O Board JA/JB is Used (B-cabinet) ... 213
When Process I/O Board KA/KB is Used (A-cabinet). 215
When Process I/O Board MA is Used (A-cabinet) 214
When Process I/O Board MB is Used (A-cabinet) 214
When Two or More Process I/O Board and I/O Unit-MODEL A are Used 218
WRING IN THE CABLE CARRIER 486

REVISION RECORD

Edition	Date	Contents
10	Oct.,2019	• Addition of CR-4*i*A, CR-7*i*A/L, CR-14*i*A, CR-15*i*A, ARC Mate 100*i*D/8L/10L, ARC Mate 120*i*D, M-10*i*D/12/8L/10L, M-410 *i*C/110, M-20*i*D/25, R-2000*i*C/100P/190U/220U/210WE, R-2000iD/100FH/165FH/210FH, M-20*i*B/25C/35S, R-1000*i*A/130F, LR Mate 200*i*D/4S/4SC/4SH/7C/7H/7L/7LC/7WP. • Correction of errors.
09	Feb.,2017	• Addition of R-1000*i*A/120F-7B. • Addition of R-30*i*B Plus. • Correction of errors.
08	Feb.,2016	• Addition of R-2000*i*C/210L/270F, M-20*i*B/25, M-710*i*C/20M, M-410*i*C/500, F-100*i*A. • Addition of figure of process I/O board JA, JB, KA, KB, MA, MB. • Correction of errors.
07	Jul.,2015	• Addition of M-2000*i*A/1700L/2300, ARC Mate 100*i*C/8L, M-10*i*A/8L. • Addition of specification of FROM/SRAM module. • Addition of sensor I/F unit for CR35*i*A.
06	Apr.,2015	• Addition of R-2000*i*C/125L/165R/210R, M-10*i*A/7L/12S, M-20*i*A/12L/20MT/35MT, ARC Mate 100*i*C/7L/12S, ARC Mate 120*i*C/12L, M-900*i*B/280L, CR35*i*A. • Correction of errors.
05	Dec.,2013	Addition of R-2000*i*C, M-410*i*C. Correction of errors.
04	Dec.,2012	Addition of M-2*i*A. Correction of errors.
03	Aug.,2012	Addition of M-900*i*A/200P. Correction of errors.
02	May.,2012	Addition of M-2000*i*A.
01	Mar.,2012	

B-83195EN/10

* B - 8 3 1 9 5 E N / 1 0 *