International Journal of Dynamics and Control (2026) 14:113
https://doi.org/10.1007/s40435-026-02055-8

Disturbance observer-based fault-tolerant control of a quadrotor with total rotor failure

Ahlem Nasr[1,2] · Taoufik Ladhari[2] · Salim Hadj Said[2] · Sahbi Boubaker[3]

Received: 9 October 2025 / Revised: 13 February 2026 / Accepted: 20 February 2026
© The Author(s), under exclusive licence to Springer-Verlag GmbH Germany, part of Springer Nature 2026

Abstract
This work proposes a disturbance observer (DOB)-based fault-tolerant control (FTC) approach for a quadcopter subject to total rotor failure. The main goal is to develop a robust control strategy capable of maintaining partial flight control and stabilizing the quadcopter even after a complete failure of one rotor. This is a major challenge, as losing one rotor breaks the thrust symmetry, leading to instability. The proposed approach joins two key components: a primary axis controller that enables the quadrotor to regulate both its spatial position and inclination, and a DOB designed to estimate and compensate for disturbances caused by rotor failures and cross-coupling effects. Leveraging nested control loops and quadratic programming optimization, the control signals are dynamically allocated in response to real-time angular acceleration feedback, thereby reducing reliance on an accurate plant model. The method is shown in high-fidelity MATLAB/Simulink simulations to stabilize the quadcopter post-failure, with comparative analysis indicating high performance over a used estimator in a prior investigation.

Keywords Fault estimation · Faulty rotor · FTC · High-gain disturbance observer · Quadrotor

1 Introduction

Unmanned Aerial Vehicles (UAVs), commonly referred to as drones, have rapidly emerged as one of the most cutting-edge technologies of our area due to breakthroughs in flight dynamics, computational capabilities, sensor technologies, and wireless communication systems. The Federal Aviation Administration (FAA) reports that the USA has 383,007 registered commercial drones as of April 2025 [1]. The worldwide installed base of commercial drones continues to expand at a rate that exceeds other growth rates. It is now crucial that modern control systems maintain operational capability despite uncertainties, disturbances, and malfunctioning. In particular, actuator failures are critical as they can adversely affect system efficiency, operational safety, and dynamic stability. Such defects often culminate in impaired control performance or catastrophic system failure and may occur due to environmental factors or unexpected operational conditions, among others. Rotor failure presents a tougher challenge that offers more practical benefits. This is because the most favorable course of action when dealing with a severely damaged rotor during practical operations is to turn it off. Consequently, the development of fault-tolerant control (FTC) methods for various types of UAVs has earned significant attention as an essential approach for ensuring continued functionality under compromising conditions [2–11]. The choice to switch off a severely damaged rotor becomes advantageous because it stops vibrations from rotor imbalance. The following solution to address this problem is introduced by [12].

In [9], a fault-tolerant control method uses deep reinforcement learning to deal with such errors. The method uses a low-level control strategy and integrates PID lift correction into the actor-critic structure, which improves control accuracy and robustness, allowing the Unmanned Aerial

✉ Ahlem Nasr
nasrahlem535@gmail.com

✉ Salim Hadj Said
salim.hadjsaid06@yahoo.fr

Taoufik Ladhari
taoufik.ladhari@enim.rnu.tn

Sahbi Boubaker
sboubaker@uj.edu.sa

1 University of Sousse, National Engineering School of Sousse, Sousse 4002, Tunisia

2 University of Monastir, Laboratory of Automatic Electrical Systems and Environment, Monastir 5019, Tunisia

3 College of Computer Science and Engineering, Jeddah, Saudi Arabia

Published online: 13 March 2026

Vehicle (UAV) to maintain high-speed flight when the rotor fails while authors in [13] propose a two-part solution, consisting of sliding mode control to maintain flight stability and dynamic control distribution to redistribute forces to the remaining full rotors while maintaining maximum rotor speed limits. In [14], a fault-tolerant control (FTC) approach that uses model predictive control to handle such faults without controller switching is introduced. The designed FTC includes fault detection and diagnosis module as well as fault estimation scheme using a two-stage Kalman filter.

Fault-tolerant control systems applied to UAVs consist of two main components: fault detection and isolation (FDI), and fault estimation [15–18]. Accurate and timely estimation of actuator faults is pivotal for the effective design of fault-tolerant control (FTC) copes, which enables the control system to adaptively mitigate faults and achieve desired performance benchmarks. Among the numerous methods for the estimation of faults, observer-based methods have received considerable attention due to their ability to reconstruct non-measurable system states and fault signals [6, 14, 19–23]. In [2, 3], the authors propose a uniform passive fault-tolerant control (FTC) strategy for a quadrotor subject to complete rotor failures. In such case, rotor faults are modeled as lumped disturbances and estimated through a filtering-based approach applied to the time derivatives of the system states. The resulting estimates are then incorporated into the control law, which employs a dynamic control allocation strategy to avoid switching between nominal and faulty operating modes. Inspired by the aforementioned framework, this paper proposes a disturbance observer–based fault-tolerant control (DOB-FTC) scheme aimed at accurately estimating and compensating actuator malfunctions. While preserving the primary axis solution and the dynamic control allocation strategy adopted in [2, 3], the fault estimation mechanism is replaced by a robust nonlinear disturbance observer instead of the filtering-based estimator relying on state derivatives. By exploiting the fast convergence and strong robustness properties of DOB, the proposed approach enables precise and timely estimation of actuator faults, which are seamlessly integrated into the FTC framework to enhance overall system performance under complete rotor failure conditions. The main contributions of this paper are summarized as follows:

- A nonlinear disturbance observer is developed to accurately and rapidly estimate actuator faults arising from complete rotor failure.
- Compared to the estimator used in [3], the proposed observation scheme exhibits improved robustness against modeling uncertainties and measurement noise.
- The estimated fault signals are seamlessly integrated into a nested position–attitude–rate fault-tolerant control architecture combined with a quadratic programming-based control allocation scheme.
- Comprehensive simulation studies, including comparative evaluations with existing estimation-based methods, demonstrate superior tracking performance and enhanced fault recovery capability of the proposed approach. These improvements are quantitatively validated through multiple performance metrics.

The remainder of this paper is structured as follows: Sect. 2 delineates the problem formulation and mathematical modeling of the quadrotor with actuator faults. Section 3 elaborates on the development and stability analysis of the proposed high-gain disturbance observer. Section 4 outlines the FTC methodology that uses several control loops and its implementation for the quadrotor model. Section 5 presents simulation results alongside comparative evaluations, and sect. 6 summarizes the paper by presenting the key findings and outlining potential avenues for future research exploration.

2 Quadrotor modeling

This section presents the quadrotor model in a specific form that simplifies the design of the disturbance observer. The fundamental principles of multicopter design are detailed in [24].

2.1 Dynamical model of a healthy quadrotor

Let a body frame reference $B = \left(x_B \; y_B \; z_B\right)$, located at the quadcopter's center of mass (see Fig. 1). So, the linear velocity vector is given by $V = \left[V_x \;\; V_y \;\; V_z\right]^T$, and angular velocities are grouped in ω as follows: $\omega \triangleq \left[p \; q \; r\right]^T$. Consider also the terrestrial frame axes $\left(x_T, \; y_T, \; z_T\right)$.

Let now R_{tb} the rotation matrix that transforms the body frame B to the terrestrial frame be as follows:

$$R_{tb} = \begin{bmatrix} \cos\theta\cos\psi & \cos\psi\sin\theta\sin\phi - sin\psi\cos\theta & h_1 \\ \cos\theta\sin\psi & \sin\psi\sin\theta\sin\phi + cos\psi\cos\phi & h_2 \\ -sin\theta & \sin\phi\cos\theta & h_3 \end{bmatrix}$$

The quadrotor's state space model can be described in the frame body by the following expression [2]:

$$\begin{cases} \dot{P} = V \\ \dot{V} = \mathbf{g} - \frac{1}{m} n_3 F_p \\ \dot{n}_3 = -n_3 \times R_{tb}\omega \\ \dot{\omega} = J^{-1}(-\omega \times J\omega) + J^{-1}\tau \end{cases} \tag{1}$$

where

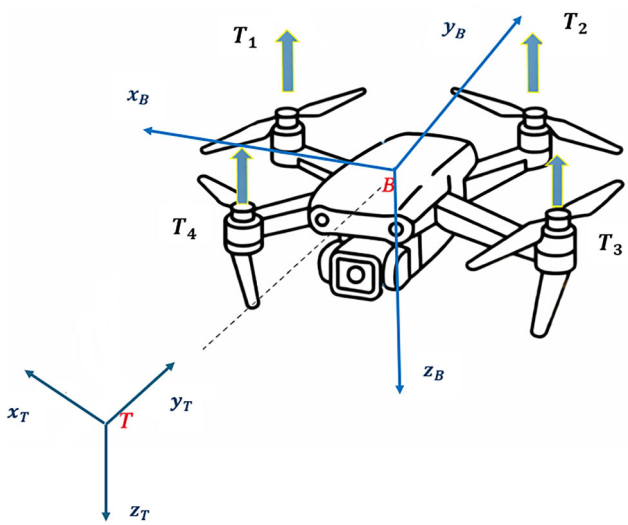

Fig. 1 Quadrotor structure

- $P \in \mathbb{R}^3$ and $V \in \mathbb{R}^3$ are, respectively, the position and linear velocity of the quadcopter,
- $n_3 \triangleq \left[h_1\ h_2\ h_3\right]^T \in \mathbb{R}^3$ represents the primary axis in the terrestrial frame,
- $F_p \in \mathbb{R}$ is the thrust force generated by the four rotors in the direction of z_B-axis,
- $\tau = \left[\tau_p\ \tau_q\ \tau_r\right]^T \in \mathbb{R}^3$ is the torque control vector of the quadrotor,
- $J \triangleq \mathrm{diag}(J_{xx}, J_{yy}, J_{zz}) \in \mathbb{R}^{3\times 3}$ represents the quadcopter's moment of inertia,
- $\mathbf{g} = \left[0\ 0\ g\right]^T \in \mathbb{R}^3$ is the gravity vector,
- $m \in \mathbb{R}$ is the quadcopter's mass.

Remark 1 It is notifiable that the primary axis, denoted as n_3, is a vector that remains fixed relative to the quadcopter's body, specifically aligned with the downward, pointing z_B axis of the body frame, but is represented within the earth (inertial) frame for control purposes. The position controller leverages position information to generate this desired primary axis, n_{3d} in conjunction with the desired vertical velocity V_{zd}, effectively translating position commands into orientation targets. Controlling the orientation of this primary axis is fundamentally tied to the quadcopter's ability to regulate both its spatial position and inclination, since the thrust direction (aligned with n_3) determines how the vehicle moves and tilts in three-dimensional space

Now, consider the whole thrust vector $T = \left[T_1\ T_2\ T_3\ T_4\right]^T$, which includes the thrust arising from each rotor and $u = \left[F_p\ \tau^T\right]^T$ is the virtual control input vector. The transformation from T to u is given as follows:

$$u = MT \tag{2}$$

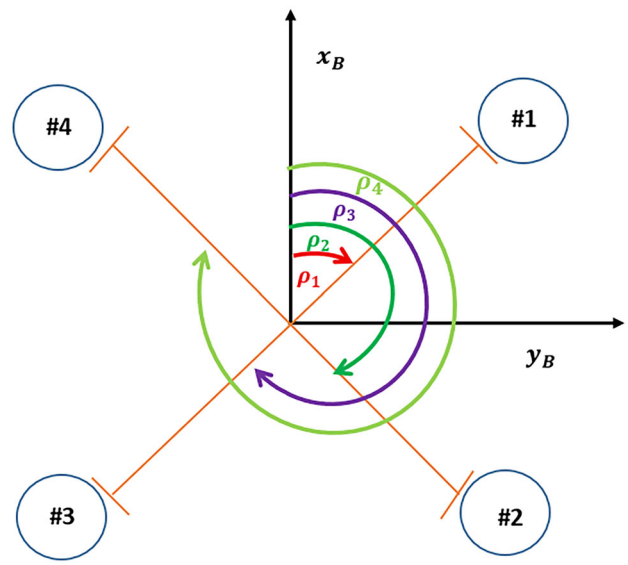

Fig. 2 Rotor index and body frame orientation

where

$$M = \begin{bmatrix} 1 & 1 & 1 & 1 \\ -l\sin\rho_1 & -l\sin\rho_2 & -l\sin\rho_3 & -l\sin\rho_4 \\ l\cos\rho_1 & l\cos\rho_2 & l\cos\rho_3 & l\cos\rho_4 \\ c & -c & c & -c \end{bmatrix}$$

$l \in \mathbb{R}^+$ is the distance between the center of mass of the quadcopter and each rotor and c represents the ratio between the aerodynamic reaction torque and the thrust produced by a rotor, i.e., $c = k_m/k_f$, where k_m denotes the rotor drag (reaction torque) coefficient associated with aerodynamic losses due to blade drag and k_f denotes the rotor thrust coefficient associated with lift generation. This formulation allows the reaction torque to be expressed directly as a function of the thrust. As shown in Fig. 2, ρ_i for $i = 1, .., 4$ are the angle between the center of mass of the quadrotor ox_B and the arm of rotor i.

2.2 Accounting for rotor faults

We assume that the quadrotor system is subject to an actuator fault. The latter can be considered an unknown disturbance d. Consequently, the virtual control u can be rewritten in the following form:

$$u = EMT - d \tag{3}$$

where $E = I_4$ and $d = \left[d_1\ d_2\ d_3\ d_4\right]^T$. Moreover, d can be expressed with respect to the thrust vector T by:

$$d = M(I_4 - \lambda)T \tag{4}$$

with $\lambda = \mathrm{diag}(\lambda_1, \lambda_2, \lambda_3, \lambda_4)$ is the rotor efficiency matrix. Each performance coefficient $\lambda_i \in [0, 1]$; if $\lambda_i = 1$, then the

i-th rotor is perfect and performs optimally ($d_i = 0$), and if $\lambda_i = 0$, then the i-th rotor is completely faulty and non-functional ($u_i = 0$).
Therefore, referring to (1) and taking into account (3), the dynamic quadrotor system depends in d as follows

$$\begin{cases} \dot{P} = V \\ \dot{V} = \mathbf{g} - \frac{1}{m} n_3 (E_1 MT - \underline{d}_1) \\ \dot{n}_3 = -n_3 \cdot R_{tb}\omega \\ \dot{\omega} = J^{-1}(-\omega \times J\omega) + J^{-1}(E_2 MT - \underline{d}_2) \end{cases} \tag{5}$$

where $\underline{d}_1 = d_1$; $\underline{d}_2 = \begin{bmatrix} d_2 \; d_3 \; d_4 \end{bmatrix}^T$; $E_1 = \begin{bmatrix} 1 \; 0 \; 0 \; 0 \end{bmatrix}$ and $E_2 = \begin{bmatrix} 0_{3\times 1} \; I_3 \end{bmatrix}$, with I_3 is 3×3 identity matrix.

In a more compact form, the quadrotor model (5) can be expressed as:

$$\begin{cases} \dot{P} = V \\ \dot{V} = G_1(n_3, T) + \bar{d}_1 \\ \dot{n}_3 = -n_3 \cdot R_{tb}\omega \\ \dot{\omega} = G_2(\omega, T) + \bar{d}_2 \end{cases} \tag{6}$$

where:

$$\begin{cases} G_1(n_3, T) = \mathbf{g} - \frac{1}{m} n_3 E_1 MT \\ G_2(\omega, T) = J^{-1}(-\omega \times J\omega) + J^{-1} E_2 MT \\ \bar{d}_1 = \frac{1}{m} n_3 \underline{d}_1 \\ \bar{d}_2 = -J^{-1} \underline{d}_2 \end{cases} \tag{7}$$

2.3 Main objectives and methodology

The primary objective is to reconfigure the control system immediately upon detecting a motor failure, ensuring sub-optimal tracking of reference trajectories. However, in the event of a sudden and complete rotor failure, perfect trajectory tracking becomes impossible as losing one rotor in a quadrotor forces the sacrifice of a degree of freedom (the roll). The proposed approach involves generating, when one unknown rotor is completely fault, a fictitious control signal $u_1 = [F_p \; \tau_p \; \tau_q]^T$ via the three remaining torque rotors to maintain position tracking (x, y, z) even if the drone experiences rotation around its axis.

To achieve this goal, firstly, a precise fault detection and amplitude estimation should be performed using a dedicated observer. In particular, a high-gain disturbance observer is selected to reconstruct abrupt rotor failure. Subsequently, an adaptive control reconfiguration will be implemented to compensate for the failure. In this case, nested loops should be used to maintain Euler angles and normalized acceleration around their fictive trajectories. In addition, quadratic programming-based dynamic control allocation is adopted to avoid switching between safety and faulty modes.

3 Rotor fault estimation with a disturbance observer

This section is devoted to the development of a disturbance observer capable of estimating both unknown disturbance signals: d_1 and d_2. Firstly, by referring to (6) and (7), and by inspiring from [25], one can extract the intermediate components of $\bar{d}$ as follows:

$$\begin{cases} \bar{d}_1 = \dot{V} - \mathbf{g} + \frac{1}{m} n_3 E_1 MT \\ \bar{d}_2 = \dot{\omega} - J^{-1}(-\omega \times J\omega) - J^{-1} E_2 MT \end{cases} \tag{8}$$

Unfortunately $\dot{V}$ and $\dot{\omega}$ are inaccessible to measurement, and even the time derivative of V and ω cannot be exploited because the strong sensibility to the unavoidable noise measurement. Another alternative consists in using the auxiliary variables σ_1 and σ_1 to avoid the temporal derivation. Let:

$$\begin{cases} \bar{d}_1 = \sigma_1 + \theta_1 V \\ \bar{d}_2 = \sigma_2 + \theta_2 \omega \end{cases} \tag{9}$$

where the dynamics of the auxiliary variables σ_1 and σ_2 are as follows:

$$\begin{cases} \dot{\sigma}_1 = -\theta_1(\sigma_1 + \theta_1 V) - \theta_1[G_1(T, n_3)] \\ \dot{\sigma}_2 = -\theta_2(\sigma_2 + \theta_2 \omega) - \theta_2[G_2(T, \omega)] \end{cases} \tag{10}$$

Note that θ_1 and θ_2 are the observer gains.

Now, from equation (10), we can easily extract the expression of the estimated fault as follows:

$$\begin{cases} \hat{d}_1 = m[n_3]^+ \cdot \hat{\bar{d}}_1 \\ \hat{d}_2 = J \cdot \hat{\bar{d}}_2 \end{cases} \tag{11}$$

For $\theta_{1,2} \geq 1$, a fast convergence of $\hat{\bar{d}}_i$ to $\bar{d}_i$ is allowed. The disturbance error dynamics is developed as follows:

$$\begin{aligned} &Let : \tilde{d}_1 = \bar{d}_1 - \hat{\bar{d}}_1 \\ &\implies \dot{\tilde{d}}_1 = \dot{\bar{d}}_1 - (\dot{\sigma}_1 + \theta_1 \dot{V}) \\ &= \dot{\bar{d}}_1 + \theta_1(\sigma_1 + \theta_1 V) + \theta_1[G_1(.)] - \theta_1([G_1(.)] + \bar{d}_1) \cdot \\ &= \dot{\bar{d}}_1 + \theta_1(\hat{d}_1 - \theta_1 V + \theta_1 V) - \theta_1 \bar{d}_1 \\ &\implies \dot{\tilde{d}}_1 = \dot{\bar{d}}_1 - \theta_1 \tilde{d}_1 \end{aligned} \tag{12}$$

$$\begin{aligned} &Let : \tilde{d}_2 = \bar{d}_2 - \hat{\bar{d}}_2 \\ &\implies \dot{\tilde{d}}_2 = \dot{\bar{d}}_2 - (\dot{\sigma}_2 + \theta_2 \dot{\omega}) \\ &= \dot{\bar{d}}_2 + \theta_2(\sigma_2 + \theta_2 \omega) + \theta_2[G_2(.)] - \theta_2([G_2(.)] + \bar{d}_2) \cdot \\ &= \dot{\bar{d}}_2 + \theta_2(\hat{d}_2 - \theta_2 \omega + \theta_2 \omega) - \theta_2 \bar{d}_2 \\ &\implies \dot{\tilde{d}}_2 = \dot{\bar{d}}_2 - \theta_2 \tilde{d}_2 \end{aligned}$$

So, for $i = 1, 2$, it is specializes as follows:

$$\dot{\tilde{d}}_i = \dot{\bar{d}}_i - \theta_i \tilde{d}_i \quad \rightarrow \quad \dot{\tilde{d}}_i + \theta_i \tilde{d}_i = \dot{\bar{d}}_i \cdot \tag{13}$$

which arises the following solution:

$$\tilde{d}_i(t) = \tilde{d}_i(0)e^{-\theta_i t} + \int_0^t e^{-\theta_i(t-\tau)}\dot{\tilde{d}}_i(\tau)\,d\tau\,; \tag{14}$$

thereafter, one obtains the following inequality:

$$\|\tilde{d}_i(t)\| \leq \|\tilde{d}_i(0)\|e^{-\theta_i t} + \delta_i \int_0^t e^{-\theta_i(t-\tau)}\,d\tau\,. \tag{15}$$

The integral quantity in the right side evaluates to:

$$\int_0^t e^{-\theta_i(t-\tau)}\,d\tau = \frac{1}{\theta_i}\left(1 - e^{-\theta_i t}\right). \tag{16}$$

Substituting (16) in (15) gives:

$$\|\tilde{d}_i(t)\| \leq \|\tilde{d}_i(0)\|e^{-\theta_i t} + \frac{\delta_i}{\theta_i}\left(1 - e^{-\theta_i t}\right). \tag{17}$$

For a large θ_i (i.e., $\theta_i \gg 1$), $\frac{\delta_i}{\theta_i}$ becomes very small, and $e^{-\theta_i t}$ decays rapidly with respect to the time t, it arises:

$$\|\tilde{d}_i(t)\| \leq \frac{1}{\theta_i}\left(\|\tilde{d}_i(0)\| + \delta_i\right). \tag{18}$$

where $\delta_i = \sup \|\dot{\tilde{d}}_i\|$.

Let $\|\tilde{d}(t)\| = \|\tilde{d}_1(t)\| + \|\tilde{d}_2(t)\|$, $\delta = \delta_1 + \delta_2$ and $\theta = \min(\theta_1, \theta_2)$, As a result, the following inequality emerges

$$\|\tilde{d}(t)\| \leq \frac{1}{\theta}\left(\|\tilde{d}(0)\| + \delta\right) \tag{19}$$

with $\delta = \sup_{i=1,2} \|\dot{\tilde{d}}_i\|$. Consequently:

$$\|\tilde{d}\| \xrightarrow[\theta\to\infty]{} 0 \quad \Rightarrow \quad \hat{d} \xrightarrow[\theta\to\infty]{} d.\,. \tag{20}$$

Remark 2 Unlike the passive fault-tolerant control framework proposed in [3], which relies on lumped disturbance estimation using a low-pass filter whose parameters are tuned through a trial-and-error procedure and whose effectiveness is limited to a specific frequency bandwidth, we have introduced a nonlinear disturbance observer specifically designed to accurately estimate actuator faults arising from complete rotor failure. The estimates should now actively integrated into a fault-tolerant control scheme, in order to enhance the robustness and tracking performance of the quadrotor UAV under severe fault conditions and the presence of measurement noises.

4 Fault-tolerant control design

This section examines, at the first, the entire tolerant control scheme, which includes multiple internal loops. Subsequently, the control law for each internal loop is described in detail within its own subsection.

4.1 Global structure of control

The complete control scheme is illustrated in Fig. 3 and consists of four nested loops combined with a disturbance observer. The outermost loop is responsible for position tracking and produces the normalized acceleration n_3, which serves as the input to the subsequent attitude controller. The angular rate controller, receiving the virtual angular rate reference arising from the attitude controller and the measured angular rate, outputs the desired control signal u_d. Before reaching the allocation loop, each signal is adjusted using the rotor fault estimate. Finally, the allocation loop computes the desired torques to be applied to the quadrotor model.

4.2 Position controller

The position controller includes a horizontal position channel (x, y) and the vertical position z. Based on the desired $P_d = [x_d\ y_d\ z_d]^T$ the position controller generates the required n_3, which contains h_1^* and h_2^*. Precisely, in order to obtain the desired primary axis expressed in the Earth frame instead of the body frame, a PID controller is employed in the horizontal position channel, whose design is as follows:

$$a^* = K_p(P_d - P) + K_d(V_d - V)\,. \tag{21}$$

Then, it is meant to be used directly for the attitude controller. Thus, n_3^* can be obtained as:

$$n_3^* = -\frac{a^* - g}{\|a^* - g\|}\,. \tag{22}$$

The utility of generating and controlling the "primary axis" n_3 is crucial for a quadcopter's ability to maintain equilibrium and continue its mission in the event of a complete failure of one or more rotors [3].

4.3 Attitude controller

In order to design the attitude controller, we have to derive the expressions of $\dot{h}_1$ and $\dot{h}_2$ [2]. From (1):

$$\begin{bmatrix}\dot{h}_1\\ \dot{h}_2\end{bmatrix} = \begin{bmatrix}0 & h_3\\ -h_3 & 0\end{bmatrix}\begin{bmatrix}\cos\psi & -\sin\psi\\ \sin\psi & \cos\psi\end{bmatrix}\begin{bmatrix}\cos\theta & 0\\ 0 & \cos\phi\end{bmatrix}\begin{bmatrix}p\\ q\end{bmatrix}$$
$$= \begin{bmatrix}\sin\psi\\ -\cos\psi\end{bmatrix} h_3 p\cos\theta + \begin{bmatrix}\cos\psi\\ \sin\psi\end{bmatrix} h_3 q\cos\phi$$

The aim here is to design the desired angular speed $\omega* = [p_d, q_d, r_d]^T$. So, let their expressions are given by

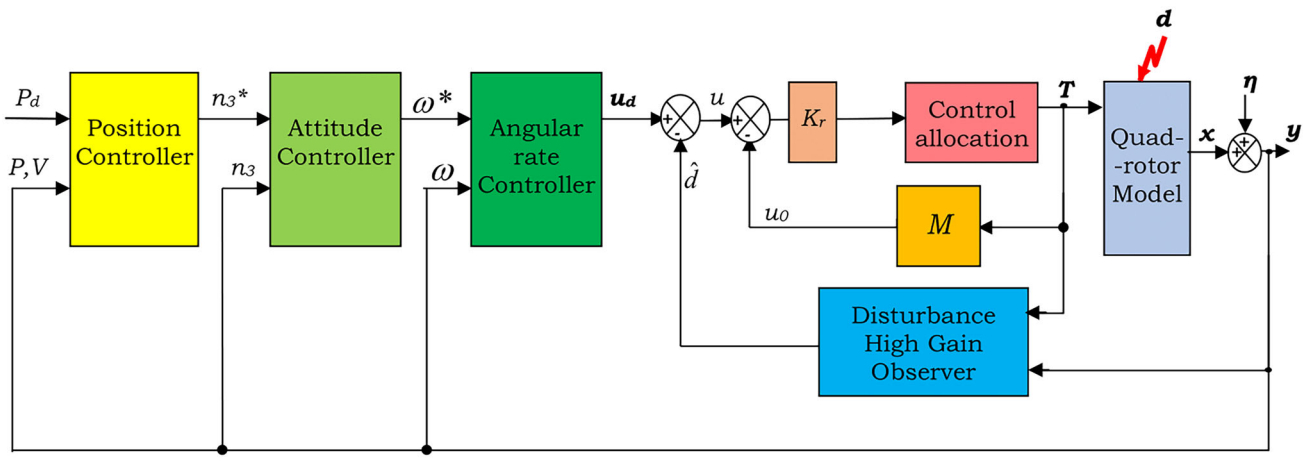

Fig. 3 FTC scheme for rotor faulty quadrotor

the following:

$$\begin{cases} p_d = -k_{n_3} \cdot \sqrt{h_1^2 + h_2^2} \cdot \sin(\psi - \beta) \\ q_d = -k_{n_3} \cdot \sqrt{h_1^2 + h_2^2} \cdot \cos(\psi - \beta) \\ r_d = -k_r(\psi - \psi_d) \end{cases} \tag{23}$$

where $\tilde{h}_1 = h_1 - h_1^*$, $\tilde{h}_2 = h_2 - h_2^*$, and $\tan\beta = \frac{\tilde{h}_2}{\tilde{h}_1}$, which leads to obtain $\beta = \arctan 2(\tilde{h}_2, \tilde{h}_1)$.

The purpose of the attitude controller is to let n_3 reach n_3^*. Accordingly, h_1 and h_2 lean toward h_1^* and h_2^*, respectively. In order to demonstrate stability of the attitude loop, consider the following Lyapunov function:

$$V = \frac{1}{2}\left(\tilde{h}_1^2 + \tilde{h}_2^2\right). \tag{24}$$

when evaluating its time derivative, one obtains:

$$\begin{aligned} \dot{V} &= \tilde{h}_1\dot{\tilde{h}}_1 + \tilde{h}_2\dot{\tilde{h}}_2 \\ &= h_3\sqrt{\tilde{h}_1^2 + \tilde{h}_2^2}\big((\cos\beta\sin\psi - \sin\beta\cos\psi)p_d \cdot \\ &\quad +(\cos\beta\cos\psi + \sin\beta\sin\psi)q_d\big) \end{aligned} \tag{25}$$

taking into account that:

$$\begin{cases} \cos\beta = \frac{\tilde{h}_1}{\sqrt{\tilde{h}_1^2+\tilde{h}_2^2}} \\ \sin\beta = \frac{\tilde{h}_2}{\sqrt{\tilde{h}_1^2+\tilde{h}_2^2}} \end{cases} \tag{26}$$

Through mathematical development from (25), the following result emerges:

$$\dot{V} = -2k_{n_3}h_3V\,. \tag{27}$$

Thus, it is sufficient to choose $k_{n_3} > 0$ to obtain the asymptotic stability of this loop.

4.4 Angular rate controller

The altitude channel produces the required thrust force F_p^* and the required torque τ^*. As the yaw channel is uncontrollable, it will be give up.

For simplicity of presentation of the altitude control law, let us consider in what follows: $x_1 = \left[h_1\ h_2\right]^T$, $x_2 = \left[v_z\ p\ q\right]^T$ and $u_{d1} = \left[F_p^*\ \tau_p^*\ \tau_q^*\right]^T$.

A reduced state space model, inherited from (6), is written in the following expression:

$$\begin{cases} \dot{x}_1 = A_1x_2 \\ \dot{x}_2 = A_2x_2 + D_2 + B_2u_1 + \bar{d} \end{cases} \tag{28}$$

where:

$$A_1 = \begin{bmatrix} 0 & -\cos\psi\sin\theta\sin\phi + sin\psi\cos\theta & \cos\theta\cos\psi \\ 0 & -\sin\psi\sin\theta\sin\phi - cos\psi\cos\phi & \cos\theta\sin\psi \end{bmatrix};$$

$$A_2 = \begin{bmatrix} 0 & 0 & 0 \\ 0 & 0 & -\frac{J_{zz}-J_{yy}}{J_{xx}}r \\ 0 & -\frac{J_{xx}-J_{zz}}{J_{yy}}r & 0 \end{bmatrix};\ B_2 = \begin{bmatrix} -\frac{h_3}{m} & 0 & 0 \\ 0 & \frac{1}{J_{xx}} & 0 \\ 0 & 0 & \frac{1}{J_{yy}} \end{bmatrix};$$

$$D_2 = \left[g\ 0\ 0\right]^T$$

Let tracking errors defined as: $\tilde{x}_1 = x_1 - x_{1d}$ and $\tilde{x}_2 = x_2 - x_{2d}$.

A feedback linearization control law corresponding to (28) is designed as follows:

$$u_{d1} = B_2^{-1}\left(\dot{x}_{2d} - (K_1 + A_1^T)\tilde{x}_1 + f_2(x, \hat{d})\right). \tag{29}$$

where $f_2(x, \hat{d}) = -K_2\tilde{x}_2 - A_2x_2 - D_2 - \hat{d}$.

Note that the matrix B_2 is invertible as long as $h_3 \neq 0$.

Theorem 1 *Consider the system (28) and the control law (29), the tracking error converges to a bounded limit, which can be arbitrarily minimized by the judicious choice of design parameters K_1 and K_2.*

Analysis of the tracking error convergence is detailed in the proof in Appendix A.

4.5 Rotor dynamics compensation

Rotor dynamic compensation is essential in quadcopter systems to improve flight stability and control accuracy. Due to the rapid and complex motion of the rotors, quadcopters are susceptible to various dynamic factors such as aerodynamic disturbances, rotor drag, sudden loads, or wind direction changes. Rotor dynamic compensation uses advanced control algorithms and precise modeling to predict and compensate for these effects in real time. At this level, aproportional action is adopted for the compensation of the rotor dynamics. Yet, one can write:

$$u_{ss} = K_r(u - u_0) \tag{30}$$

where $u = u_d - \hat{d}$, with $\hat{d}$ is the estimated disturbance, $k_r \in \mathbb{R}_+$ is a positive gain, u represents the desired input vector, and u_0 represents the estimation of u that cannot be acquired directly. By compensating for these dynamic behaviors, the quadcopter can maintain stable flight, respond quickly to control commands, and perform complex maneuvers more reliably.

4.6 Control allocation

In order to avoid the switching between the free faulty case ($T = M^{-1}u$) and the faulty case ($T = (E_1M)^+u_1$), the control problem is transformed into a quadratic programming optimization problem. So, the control arises from the minimization of the following cost function:

$$\min_{0 \le T_i \le T_{\max}} \frac{1}{2}(u_{ss} - MT)^T W(u_{ss} - MT) \tag{31}$$

with $W = diag((\omega_f, \omega_{\tau_p}, \omega_{\tau_q}, \omega_{\tau_r})$ being the weighting matrix which represents the priority of each input element. We consider $\omega_{\tau_p}, \omega_{\tau_q} \gg \omega_f \gg \omega_{\tau_r}$.

Assuming that the yaw channel is controllable, equation (30) is explicitly solved without constraints as follows

$$\frac{\partial \frac{1}{2}(\mathbf{u}_{ss} - M\mathbf{T})^{\mathrm{T}} W(\mathbf{u}_{ss} - M\mathbf{T})}{\partial \mathbf{T}} = 0 \cdot \tag{32}$$

which leads to

$$(\mathbf{u}_{ss} - M\mathbf{T})^{\mathrm{T}} WM = 0.. \tag{33}$$

So, the control law T can be computed by the following explicit expression:

$$T = (M^T WM)^+(M^T W)u_{ss} \tag{34}$$

However, the allocation loop can generate poorly conditioned control signals. So, each torque T_i should be constrained by $0 \le T_i \le T_{\max}$.

Table 1 Drone parameters

Parameter	Value	Unit	Description
m	0.7	kg	Total mass of the drone
J_{xx}	0.0056	$kg \cdot m^2$	Roll moment of inertia
J_{yy}	0.0056	$kg \cdot m^2$	Pitch moment of inertia
J_{zz}	0.0104	$kg \cdot m^2$	Yaw moment of inertia
l	0.0125	m	Arm length
c	0.0166	$N/(rad/s)$	Thrust coefficient

Source: Example drone parameters

Table 2 Quadrotor controller and observer design parameters

Parameter	Value
K_p	diag([10.5, 10.5, 15.75])
K_d	diag([4, 4, 6])
k_{n_3}	30
K_1	$[\mathrm{diag}(12, 12) \;\; 0_{2\times 1}]$
K_2	$20 \times$ diag([12, 12, 3.6])
K_r	1
$W = (\omega_f, \omega_{\tau_p}, \omega_{\tau_q}, \omega_{\tau_r})$	diag([1, 20, 20, 0.01])
$\theta_1 = \theta_2$	10

5 Simulation results

5.1 Disturbance observer-based FTC with free measurement noise

This section is devoted to validate the global control structure depicted in Fig. 3. Control laws (21), (22), (23), (29) and (34) with disturbance observer (9), (10), and (11) are applied to the dynamic model of the quadrotor described by (5) with nominal parameters illustrated in Table 1.

Design parameters of controllers and the disturbance observer are given in Table 2.

The quadrotor is made to track a square trajectory which is described as follows:

$$x_d = \begin{cases} 0, & 0 < t \le 1s \\ 3, & 1s < t \le 6s \\ 0, & 0 > 6s \end{cases} \tag{35}$$

$$y_d = \begin{cases} 0, & 0 < t \le 4s \\ 1, & 4s < t \le 8s \\ 0, & 0 > 8s \end{cases} \tag{36}$$

$$z_d = -2 \tag{37}$$

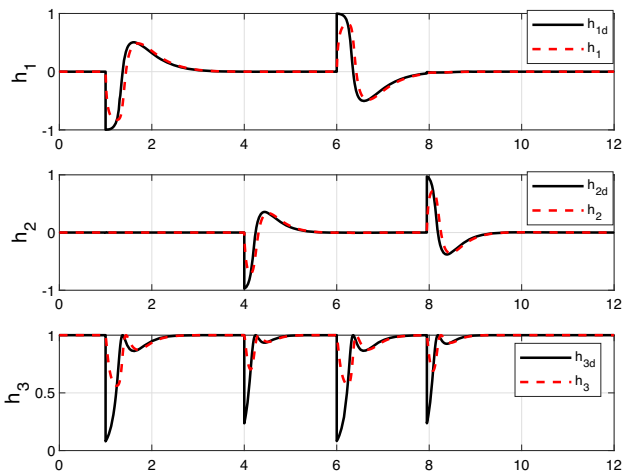

Fig. 4 Primary axis tracking

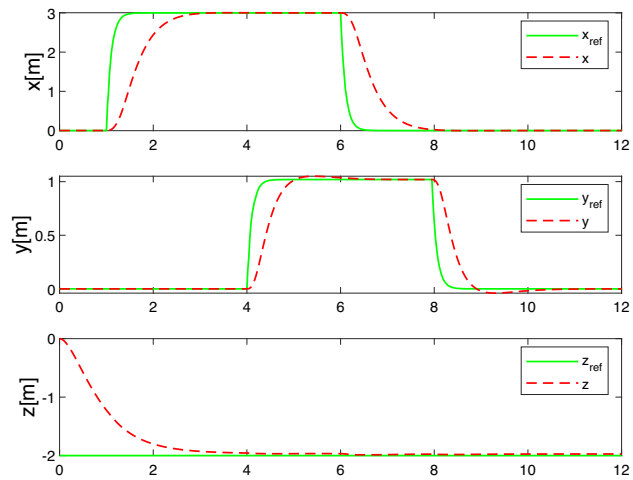

Fig. 6 Position tracking performances

Initial conditions of the quadrotor's states are set to 0 except $h_3(0) = 1$, while initial conditions of the disturbance observer are set to 0, i.e., $\sigma_i(0) = 0$ for $i = 1..6$. Figure 4 shows tracking performances of the virtual primary axis (h_i, for $i = 1..3$), while Figs. 5 and 6 illustrate, respectively, $3D$ and the time evolution of the coordinate position with respect to the desired square profile. Control torque signals are given in Fig. 7, and the estimate of complete rotor failure is visualized in Fig. 8.

Fig. 4 demonstrates how the primary axis components are aligned with their references, enabling accurate tracking performance of the position coordinates x,y, and z (see Figs. 5 and 6). A complete failure is induced in the first rotor at $t = 5.5s$ by remotely disabling its control signal. As illustrated in Fig. 7, this causes the thrust output T_1 to drop to zero. To compensate for the resulting imbalance, the torque outputs of the remaining three motors are systematically reduced. This adjustment ensures that the virtual control vector u_{1d} closely approximates its fault-free counterpart. Consequently, the drone maintains equilibrium and flight stability while mitigating destabilizing effects caused by the thrust loss of the first rotor. This thrust reduction strategy exemplifies adaptive control to preserve quasi-optimal performance during partial system failure. Figure 8 clearly

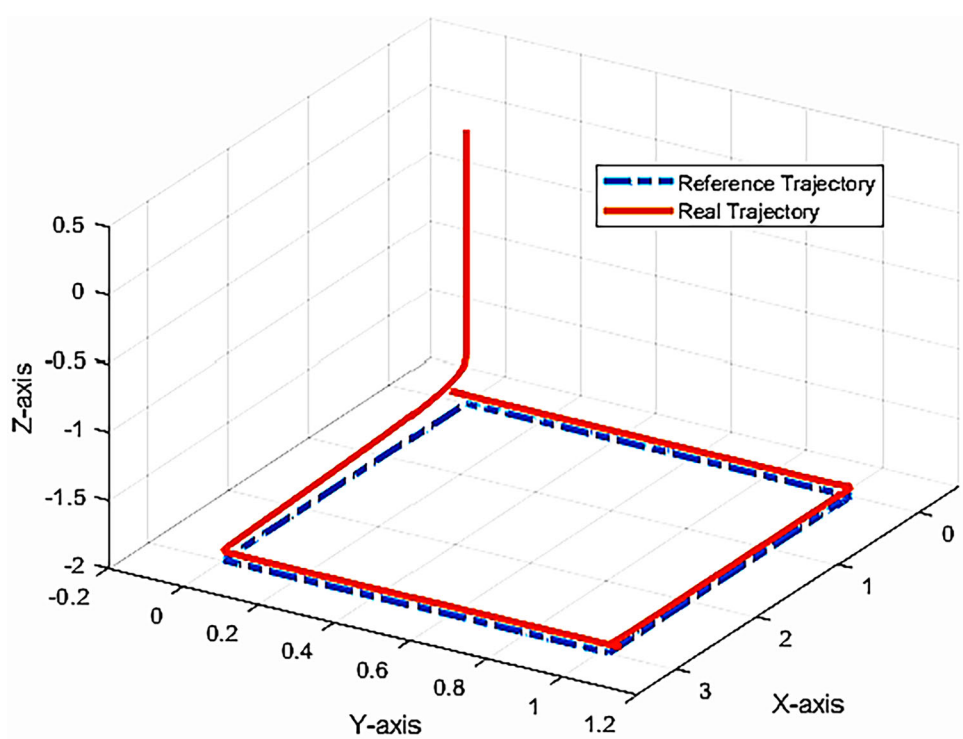

Fig. 5 3D trajectory tracking without noise measurement

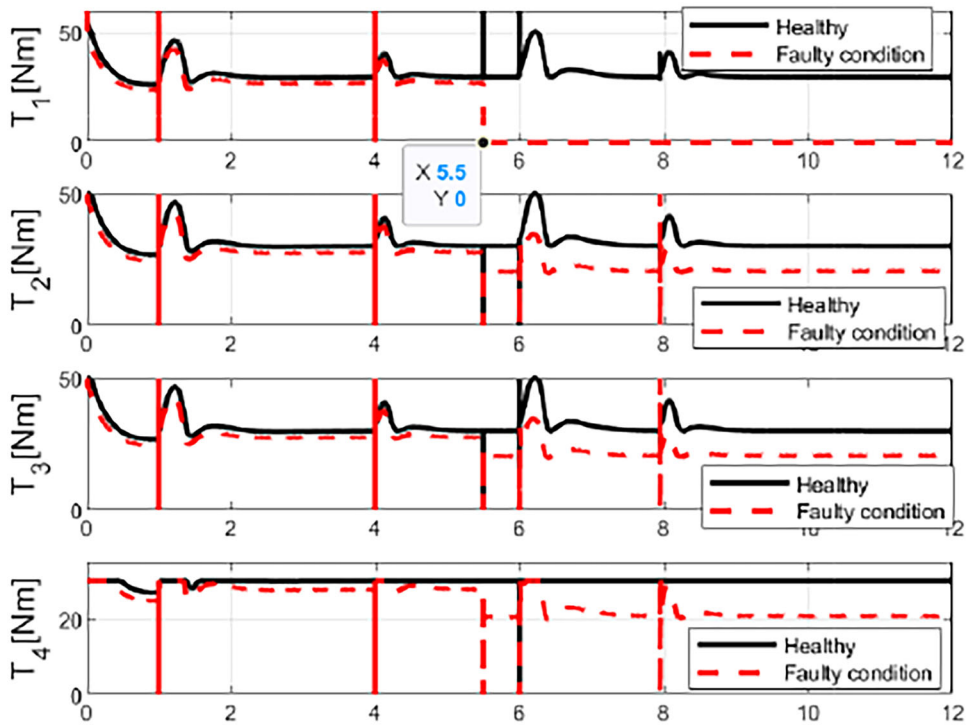

Fig. 7 Thrust response of motors: nominal versus faulty case

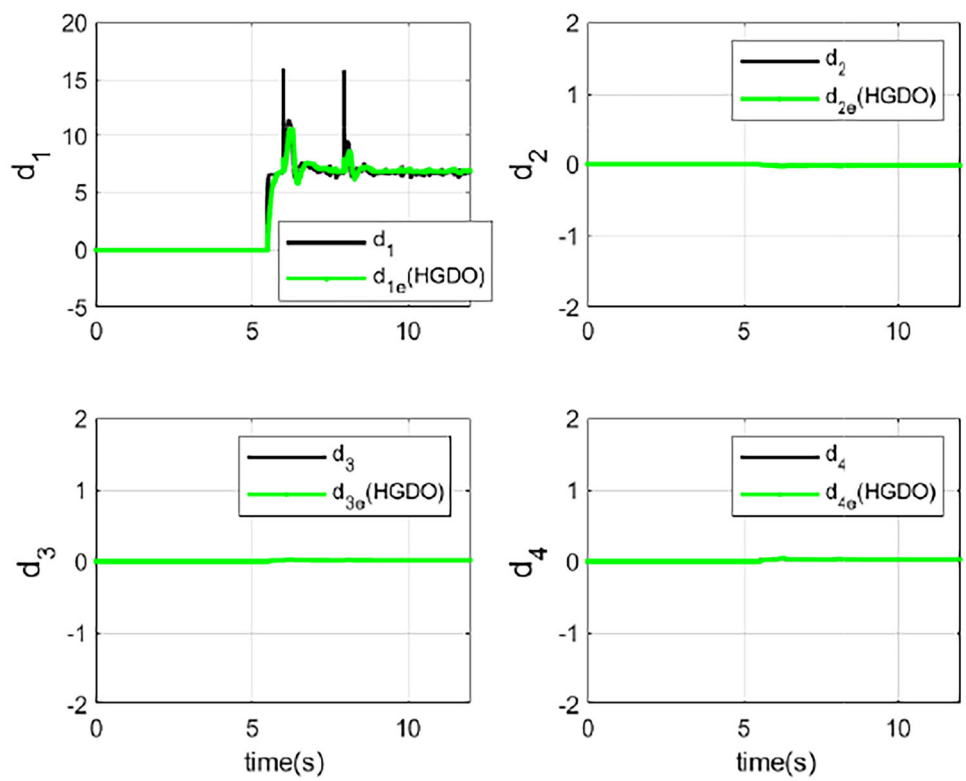

Fig. 8 Rotor fault estimation

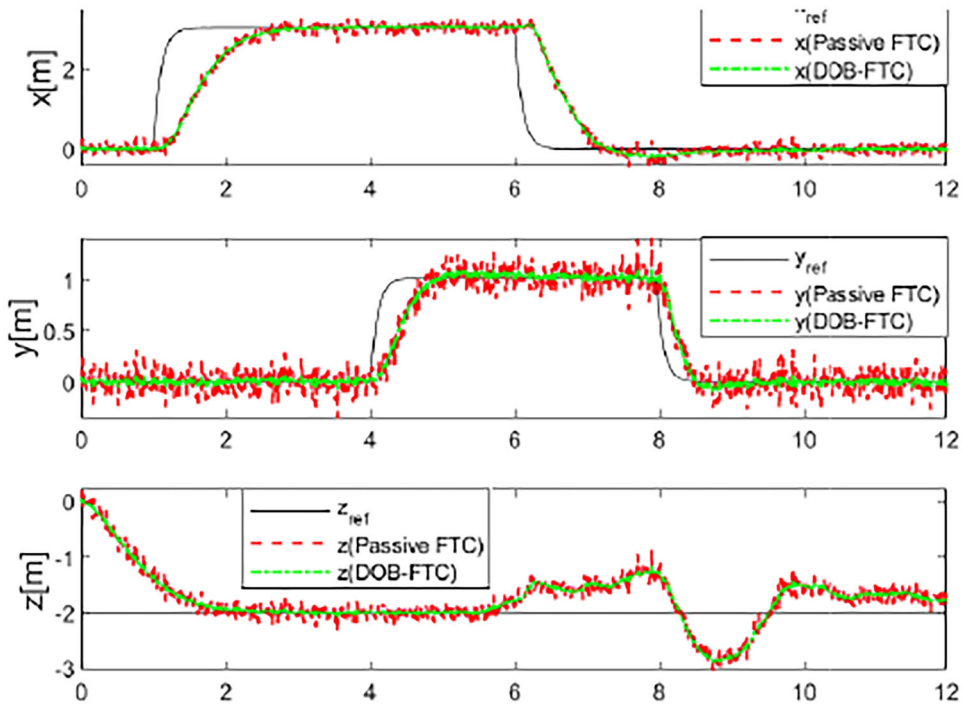

Fig. 9 Position tracking performance in presence of noise measurements

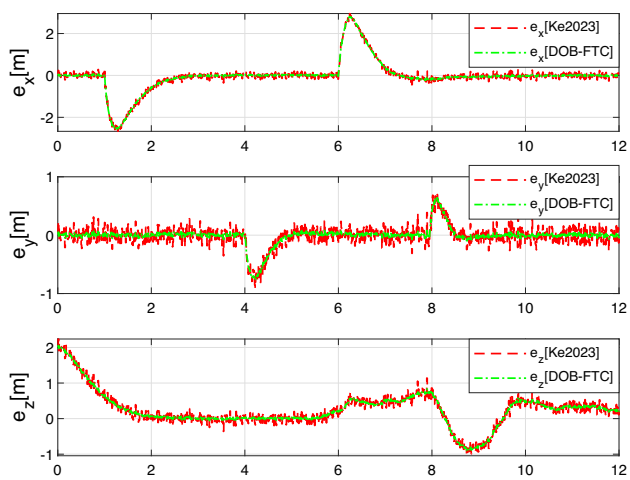

Fig. 10 x–y–z Position tracking errors in the presence of measurement noise

demonstrates that the observer implemented in this study efficiently detected the motor fault and precisely indicated the exact moment when it occurred. This proves the observer's real-time fault diagnosis feature, enabling automatic identification and potential avoidance of system breakdowns. In conclusion, the stability of the quadrotor is provided by two main actions: disturbance compensation by injecting the estimated disturbance signal $\hat{d}$ into the control law (see Fig. 3) and quadratic optimization in the control allocation loop. Although altitude controller gives up the roll angle, resulting in yawing of the drone, the drone continues to follow the desired setpoint even with a complete rotor failure.

These results were obtained under the assumption of noise-free measurements. However, in real-world conditions, the output is invariably affected by measurement noises. The second simulation scenario that we should provide in the next section focuses on a sensitivity analysis of our control scheme to such noise, with the results compared against those arising from a recent approach [3].

5.2 Disturbance observer-based FTC in the presence of measurement noises

In this section, output vector of the quadrotor model is affected by an additive measurement noise vector η. So, one can rewrite the output as follows:

$$y = Cx + \eta \tag{38}$$

The noise power of each output is selected to 10^{-3}. The parameters θ_1 and θ_2 of the disturbance observer, as well as the controller parameters, are assigned the same values as in the noise-free case.

Simulation findings are provided in Figs. 9, 10 and 11. As illustrated in Figs. 9 and 10, the time evolution of the quadrotor position and the associated tracking errors shows that the x, y, and z-position trajectories accurately track their respective reference signals up to $t = 5.5$, s. At this time instant, a sudden complete rotor failure is introduced. Following fault detection, the control system is automatically reconfigured, and stable flight is successfully maintained using the remaining three rotors. However, after the fault occurrence,

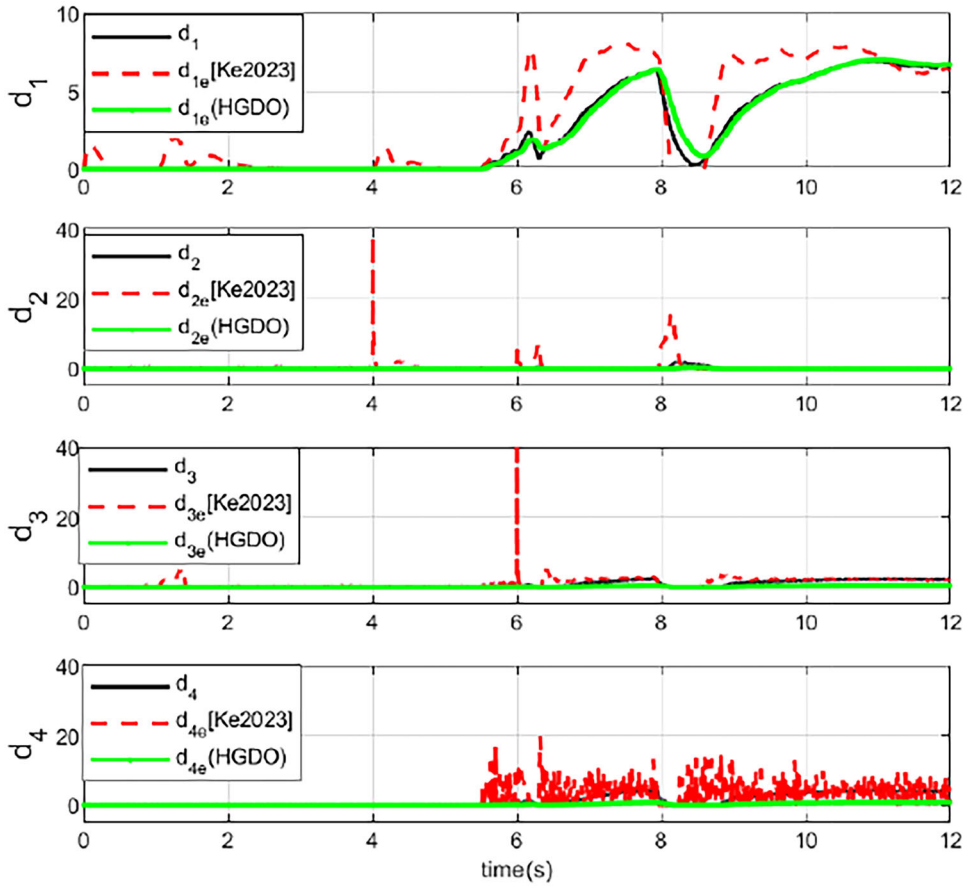

Fig. 11 Rotor fault estimation in presence of noise measurements

a slight degradation in tracking performance is shown, particularly along the z-axis. This behavior is expected and can be attributed to the weighting strategy adopted in the control allocation scheme, where higher priority is assigned to horizontal position tracking ($\omega_{\tau_p} = \omega_{\tau_q} = 20$) compared to vertical motion ($\omega_f = 1$).

Furthermore, the quantitative performance indices reported in Table 3, including the RMSE and MAE metrics, clearly demonstrate that the proposed DOB-FTC strategy yields more accurate and smoother tracking trajectories compared to the passive FTC approach presented in [3], which relies on filtered derivatives and exhibits high noise sensitivity. The observed performance gains are primarily due to the improved fault estimation accuracy of the proposed nonlinear disturbance observer, as shown in Fig. 11 and corroborated by the quantitative results in Table 4.

Table 3 Quantitative tracking error metrics for the x-position

Method	RMSE	MAE	$E_{\max}$
e_x [Ke2023]	0.976	0.642	2.663
e_x [DOB-FTC]	**0.961**	**0.635**	**2.618**

Bold values indicate the best performance among the compared methods

Table 4 Quantitative estimation error metrics for d_1

Method	RMSE	MAE	$e_{\max}$
e_{d_1} [Ke2023]	1.7911	1.2369	5.5959
e_{d_1} [DOB-FTC]	**0.435**	**0.212**	**1.714**

Bold values indicate the best performance among the compared methods

6 Conclusion

The present study presents a fault-tolerant control (FTC) strategy that uses a disturbance observer (DOB) to deal with quadcopters that are experiencing total rotor failure. This issue presents a significant challenge because of the loss of thrust symmetry and inherent instability. The suggested method incorporates the resilience of the primary axis controller with a DOB that can estimate and balance out perturbations arising from rotor failure, noise measurements, and cross-coupling effects. Using several cascaded loops, the method dynamically allocates control inputs without requiring a high-precision plant model. High-fidelity MAT-

LAB/Simulink simulations have shown that the combined cascade controllers with disturbance observer effectively stabilizes the quadcopter and maintains partial flight control even after a complete unknown rotor failure. The result confirms accurate tracking performance despite the presence of noise measurements and abrupt actuator failure. The performance superiority of the proposed method over very recent method is highlighted by comparative analysis, particularly in terms of noise measurement sensibility and trajectory tracking accuracy.

Future work will focus on expanding our approach to scenarios with multiple simultaneous failures and incorporating real-world experimental validation to further validate the robustness of the proposed control strategy.

Appendix: Closed-loop stability analysis

The closed-loop stability is examined by integrating the designed control law into the state space model and rigorously analyzing the tracking error dynamics through a Lyapunov-based approach. The stability proof involves substituting the control strategy into the system's mathematical representation, then employing a candidate Lyapunov function to assess asymptotic stability of the tracking error, thereby validating the controller's ability to maintain desired performance under dynamic conditions.

Proof By substituting the control law (29) in the reduced quadrotor model (28), one obtains:

$$\dot{x}_2 = \dot{x}_{2d} - (K_1 + A_1^T)\tilde{x}_1 - K_2\tilde{x}_2 - \hat{d} + \bar{d} \tag{1}$$

Subtracting $\dot{x}_{2d}$ gives:

$$\dot{\tilde{x}}_2 = -(K_1 + A_1^T)\tilde{x}_1 - K_2\tilde{x}_2 + \tilde{d} \tag{2}$$

with $\tilde{d} = \bar{d} - \hat{d}$.

In order to demonstrate the convergence of the tracking error, we consider the following Lyapunov function:

$$V = \frac{1}{2}\tilde{x}_1^T\tilde{x}_1 + \frac{1}{2}\tilde{x}_2^T\tilde{x}_2 + \frac{1}{2}\tilde{d}^T\tilde{d} \tag{3}$$

its temporal derivative gives:

$$\dot{V} = \tilde{x}_1^T\dot{\tilde{x}}_1 + \tilde{x}_2^T\dot{\tilde{x}}_2 + \tilde{d}^T\dot{\tilde{d}} \tag{4}$$

Taking into account that $\dot{x}_{1d} = A_1 x_{2d}$ and by substituting (3) into (4):

$$\dot{V} = \tilde{x}_1^T A_1\tilde{x}_2 + \tilde{x}_2^T(-(K_1 + A_1^T)\tilde{x}_1 - K_2\tilde{x}_2 + \tilde{d}) + \tilde{d}^T\dot{\tilde{d}} \tag{5}$$

After simplifications, it arises:

$$\dot{V} = -\tilde{x}_2^T K_2\tilde{x}_2 - \tilde{x}_2^T K_1\tilde{x}_1 + \tilde{x}_2^T\tilde{d} + \tilde{d}^T(\dot{\bar{d}} - \dot{\hat{d}}) \tag{6}$$

Using Young's inequality, it arrives that:

$$|\tilde{x}_1^T K_1\tilde{x}_2| \leq \frac{\epsilon_1}{2}\|\tilde{x}_1\|^2 + \frac{\|K_1\|^2}{2\epsilon_1}\|\tilde{x}_2\|^2 \tag{7}$$

$$\text{and} \quad |\tilde{x}_2^T\tilde{d}| \leq \frac{\epsilon_2}{2}\|\tilde{x}_2\|^2 + \frac{1}{2\epsilon_2}\|\tilde{d}\|^2 \tag{8}$$

where ϵ_1 and ϵ_2 are positive constants.

Substituting these bounds into $\dot{V}$ yields:

$$\begin{aligned}\dot{V} \leq & -\tilde{x}_2^T K_2\tilde{x}_2 + \tfrac{\epsilon_1}{2}\|\tilde{x}_1\|^2 + \tfrac{\|K_1\|^2}{2\epsilon_1}\|\tilde{x}_2\|^2 \\ & + \tfrac{\epsilon_2}{2}\|\tilde{x}_2\|^2 + \tfrac{1}{2\epsilon_2}\|\tilde{d}\|^2 + \tilde{d}^T\dot{\tilde{d}}\end{aligned} . \tag{9}$$

when grouping terms multiplying $\|\tilde{x}_2\|^2$, one obtains:

$$\begin{aligned}\dot{V} \leq & -\left(\lambda_{\min}(K_2) - \tfrac{\|K_1\|^2}{2\epsilon_1} - \tfrac{\epsilon_2}{2}\right)\|\tilde{x}_2\|^2 \\ & - \tfrac{\epsilon_1}{2}\|\tilde{x}_1\|^2 + \tfrac{1}{2\epsilon_2}\|\tilde{d}\|^2 + \tilde{d}^T\dot{\tilde{d}}\end{aligned} . \tag{10}$$

Let $\alpha_1 = \frac{\epsilon_1}{2}$ and $\alpha_2 = \lambda_{\min}(K_2) - \frac{\|K_1\|^2}{2\epsilon_1} - \frac{\epsilon_2}{2}$. Consequently, the derivative of the Lyapunov function satisfies:

$$\dot{V} \leq -\alpha_1\|\tilde{x}_1\|^2 - \alpha_2\|\tilde{x}_2\|^2 + \frac{1}{2\epsilon_2}\|\tilde{d}\|^2 + \tilde{d}^T\dot{\tilde{d}} \tag{11}$$

By referring to (19) and (20), $\|\tilde{d}(t)\| \to 0$ and $\|\dot{\tilde{d}}(t)\| \to 0$ for $t > t_1$ with t_1 is so small that θ is large. Therefore, when chosen K_1 and K_2 in the manner that $\alpha_1 > 0$ and $\alpha_2 > 0$, one can ensure $\dot{V} < 0$ and the tracking error $\tilde{x}_1, \tilde{x}_2$ converge asymptotically to zero. □

Author contributions Methodology was performed by Salim Hadj Said; software by Ahlem Nasr and Salim Hadj Said; validation by Taoufik Ladhari and Sahbi Boubaker; formal analysis by Ahlem Nasr and Sahbi Boubaker; investigation by Ahlem Nasr, Taoufik Ladhari and Salim Hadj Said; writing—original draft preparation—by Ahlem Nasr and Taoufik Ladhari; writing—review and editing—by Salim Hadj Said and Sahbi Boubaker; project administration by Salim Hadj Said. All authors have read and agreed to the published version of the manuscript.

Funding Not Applicable.

Data availability No datasets were generated or analyzed during the current study.

Code availability The code used in this study is available from the corresponding author upon reasonable request.

Declarations

Conflict of interest The authors declare no conflict of interest.

References

1. Federal Aviation Administration: Drones by the Numbers (as of 4/1/2025). https://www.faa.gov/node/54496. Accessed 1 April 2025
2. Ke C, Cai K-Y, Quan Q (2023) Uniform fault-tolerant control of a quadcopter with rotor failure. IEEE/ASME Trans Mechatron 28(1):507–517. https://doi.org/10.1109/TMECH.2022.3202804
3. Ke C, Cai K-Y, Quan Q (2023) Uniform passive fault-tolerant control of a quadcopter with one, two, or three rotor failure. IEEE Trans Rob 39(6):4297–4311. https://doi.org/10.1109/TRO.2023.3297048
4. Sun S, Wang X, Chu Q, Visser C (2021) Incremental nonlinear fault-tolerant control of a quadrotor with complete loss of two opposing rotors. IEEE Trans Rob 37(1):116–130. https://doi.org/10.1109/TRO.2020.3010626
5. Sun Z, Zhang F, Lang S (2022) Fault-tolerant model predictive control of a quadrotor with an unknown complete rotor failure. In: 41st Chinese Control Conference (CCC), pp. 4087–4093
6. Gu X, Tian Y (2023) Safety control for the quadrotor unmanned aerial vehicle despite complete loss of one rotor. IEEE Access 11:124624–124633. https://doi.org/10.1109/ACCESS.2023.3330230
7. Nan F, Sun S, Foehn P, Scaramuzza D (2022) Nonlinear mpc for quadrotor fault-tolerant control. IEEE Robot Autom Lett 7(2):5047–5054. https://doi.org/10.1109/LRA.2022.3154033
8. Chung W, Son H (2020) Fault-tolerant control of multirotor uavs by control variable elimination. IEEE/ASME Trans Mechatron 25(5):2513–2522. https://doi.org/10.1109/TMECH.2020.2982436
9. Cheng W, Li H, Hou Z (2024) Fault-tolerant control for uav based on deep reinforcement learning under single rotor failure. In: 36th Chinese Control and Decision Conference (CCDC), pp. 5279–5285
10. Liu X, Yuan Z, Gao Z, Zhang W (2024) Reinforcement learning-based fault-tolerant control for quadrotor uavs under actuator fault. IEEE Trans Industr Inf 20(12):13926–13935. https://doi.org/10.1109/TII.2024.3438241
11. Alkhoori F, Zweiri Y, Younes AB, Taha T, Seneviratne L (2017) Fault tolerance control for quad-rotor uav using gain-scheduling in matlab/gazebo. In: 4th International conference on systems and informatics (ICSAI), pp. 104–109
12. Freddi A, Lanzon A, Longhi S (2011) A feedback linearization approach to fault tolerance in quadrotor vehicles. IFAC Proc Vol 44(1):5413–5418. https://doi.org/10.3182/20110828-6-IT-1002.02016
13. Liao F, Zhao Z, Wang J (2023) Fault tolerant control of hexarotor uavs against motor failure. In: 31st Mediterranean conference on control and automation (MED), pp. 221–226
14. Jung W, Bang H (2021) Fault and failure tolerant model predictive control of quadrotor uav. Int J Aeronaut Space Sci 22(3):663–675. https://doi.org/10.1007/s42405-020-00331-1
15. Lian J, Gandhi N, Wang Y, Phan LTX (2024) Online rotor fault detection and isolation for vertical takeoff and landing vehicles. In: IEEE/RSJ International conference on intelligent robots and systems (IROS), pp. 8111–8118
16. Ashe AK. Goli S, Kandath H, Gangadharan D (2023) Multivariate data analysis for motor failure detection and isolation in a multicopter uav using real-flight attitude signals. In: International conference on unmanned aircraft systems (ICUAS), pp. 9–16
17. Cacace J, Scognamiglio V, Ruggiero F, Lippiello V (2024) Motor fault detection and isolation for multi-rotor uavs based on external wrench estimation and recurrent deep neural network. J Intell Robot Syst 110(4):148. https://doi.org/10.1007/s10846-024-02176-2
18. Scognamiglio V, Cacace J, Ruggiero F, Lippiello V (2024) Fault detection and isolation for a standard quadrotor using a deep neural network trained on a momentum-based estimator. In: IEEE 20th International conference on automation science and engineering (CASE), pp. 730–735
19. Gu X, Zhou E (2024) Fault tolerance controller design for the safety flight of the quadcopter: theory and implementation. IEEE Access 12:130053–130062. https://doi.org/10.1109/ACCESS.2024.3421661
20. Song J, Shang W, Ai S, Zhao K (2022) Model and data-driven combination: a fault diagnosis and localization method for unknown fault size of quadrotor uav actuator based on extended state observer and deep forest. Sensors 22(19):7355. https://doi.org/10.3390/s22197355
21. Gao J, Zhang Q, Chen J (2020) Ekf-based actuator fault detection and diagnosis method for tilt-rotor unmanned aerial vehicles. Math Probl Eng 2020(1):8019017. https://doi.org/10.1155/2020/8019017
22. Ahmed N, Alrasheedi N (2025) Commanded filter-based robust model reference adaptive control for quadrotor uav with state estimation subject to disturbances. Drones 9(3):181. https://doi.org/10.3390/drones9030181
23. Ke C, Cai K, Quan Q (2024) Analysis of a uniform passive fault-tolerant control method for multicopters. J Syst Eng Electron 35(6):1574–1582
24. Quan Q (2017) Introduction to multicopter design and control. Springer, Singapore
25. Izadi M, Faieghi R (2024) High-gain disturbance observer for robust trajectory tracking of quadrotors. Control Eng Pract 145:105854. https://doi.org/10.1016/j.conengprac.2024.105854

Springer Nature or its licensor (e.g. a society or other partner) holds exclusive rights to this article under a publishing agreement with the author(s) or other rightsholder(s); author self-archiving of the accepted manuscript version of this article is solely governed by the terms of such publishing agreement and applicable law.