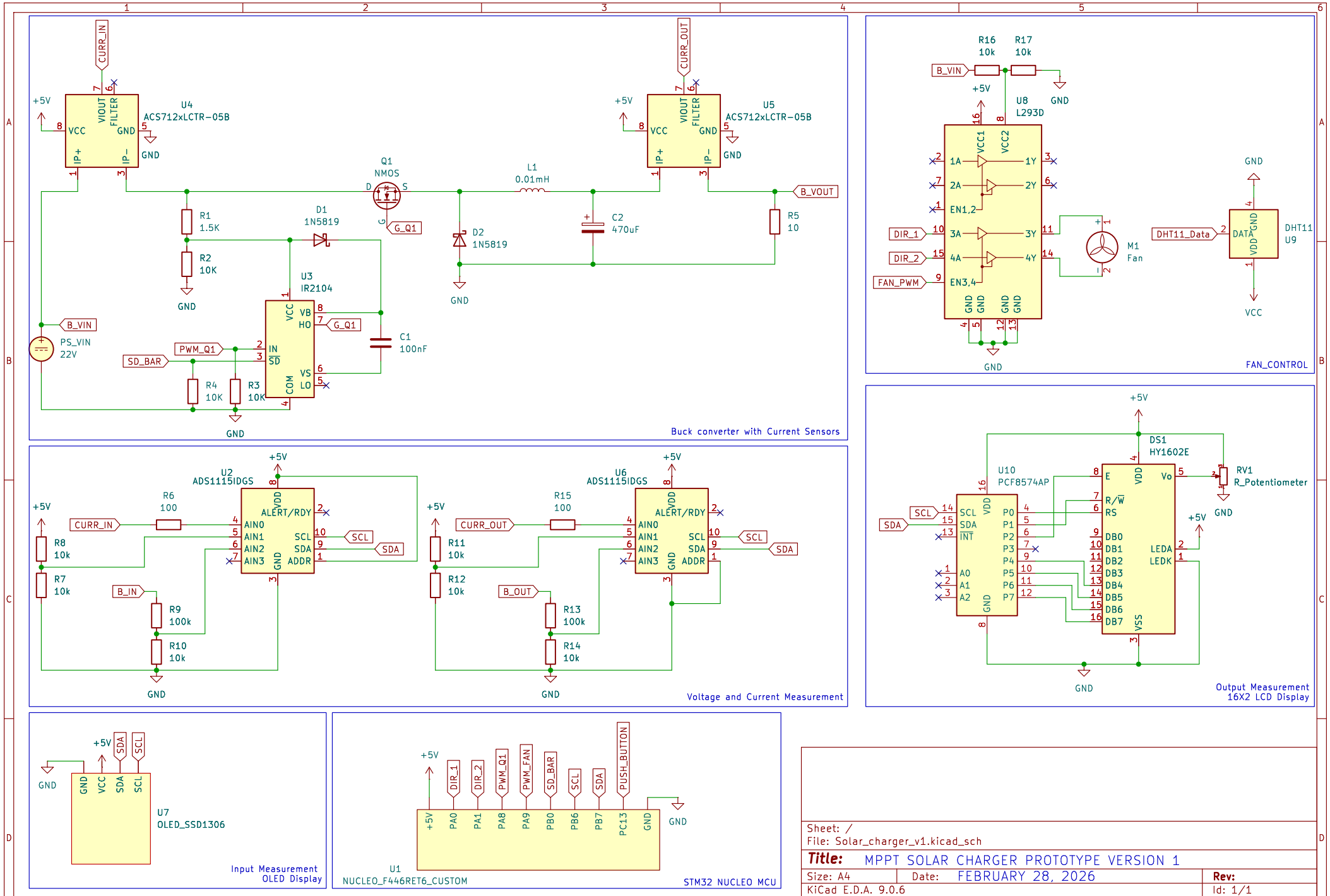

Sheet: /
File: Solar_charger_v1.kicad_sch

Title: MPPT SOLAR CHARGER PROTOTYPE VERSION 1

Size: A4	Date: FEBRUARY 28, 2026	Rev:
KiCad E.D.A. 9.0.6		Id: 1/1