Smart Safety Footwear using GPS with Mosquito Current net

This project report is submitted to

Yeshwantrao Chavan College of Engineering

(An Autonomous Institution Affiliated to Rashtrasant Tukadoji Maharaj Nagpur University)

In partial fulfillment of the requirement

for the award of the degree

of

Bachelor of Technology in Electronics Engineering

by

Sanskruti .S. Tete
Nupur .R. Paunikar
Abha .R.Tarase
Pranav .S. Kanfade
Sanskar .R. Konkamwar

Under the guidance of

Prof. Atish Peshattiwar

DEPARTMENT OF ELECTRONICS ENGINEERING

Nagar Yuwak Shikshan Sanstha's

YESHWANTRAO CHAVAN COLLEGE OF ENGINEERING,

(An Autonomous Institution Affiliated to Rashtrasant Tukadoji Maharaj Nagpur University, Nagpur)

NAGPUR – 441 110

2023-24

CERTIFICATE OF APPROVAL

Certified that the project report entitled "**Smart Safety Footwear using GPS with Mosquito Current net "** has been successfully completed by **Sanskruti.S.Tete, Nupur.R. Paunikar, Abha.R.Tarase,Pranav.S.Kanfade, Sanskar.R.Konkamvar** under the guidance of **Prof. Atish Peshattiwar and Dr.H.V.Ganvir** in recognition to the partial fulfillment for the award of the degree of B.Tech. Electronics Engineering, **Yeshwantrao Chavan College of Engineering *(An Autonomous Institution Affiliated to Rashtrasant Tukadoji Maharaj Nagpur University),*** Nagpur during session 2023-24

Prof. Atish Peshattiwar
(Guide)

Dr.H.V. Ganvir
(HOD, Physics Dept.)
(Co - Guide)

Dr. Prachi Palsodkar
(Project Co-coordinator)

Dr. R. D. Thakare
(HOD, EE Dept.)

Signature of External
Examiner: Name:
Date of Examination:

DECLARATION

We declare that

a. The work contained in this project has been done by us under the guidance of our supervisors.
b. The work has not been submitted to any other Institute for any degree or diploma.
c. We have followed the guidelines provided by the Institute in preparing the project report.
d. We have confirmed to the norms and guidelines given in the Ethical Code of Conduct of the Institute.
e. Whenever we have used materials (data, theoretical analysis, figures, and text) from other sources, we have given due credit to them by citing them in the text of the report and giving their details in the references. Further, we have taken permission from the copyright owners of the sources, whenever necessary.

Signature	Signature	Signature
Sanskruti .S. Tete	**Nupur.R. Paunikar**	**Abha .R.Tarase**
Signature	Signature	
Pranav.S. Kanfade	**Sanskar. R. Komkamvar**	

ACKNOWLEDGEMENT

We avail this opportunity to extend our hearty indebtedness to our project guide **Prof. Atish Peshattiwar,** Department of Electronics Engineering, Co-guide **Dr. H.V.Ganvir**, HOD, Department of Physics for their valuable guidance, constant encouragement and kind help at different stages for the execution of this work, for their ever encouraging and moral support.

We also express our sincere gratitude to Principal **Dr. U. P. Waghe**,**Dr. R. D. Thakare**, Head of the Department of Electronics Engineering, for providing valuable departmental facilities.

We would like to thank **Dr. P.P.Palsodkar** (Project Coordinator) and all staff members of the Electronics Engineering Department for extending the facilities without which the project would not have been a success.

We sincerely thank to all academic and non- teaching staffs in YCCE, Nagpur who helped me.

Our sincere thanks to the author whose works we have consulted and quoted in this work.

LIST OF CONTENTS

TitlPage No

Title Page	**i**
Certificate of Approval	**ii**
Declaration	**iii**
Acknowledgement	**iv**
List of Contents	**v**
List of Figures	**vii**
List of Abbrevations	**ix**
Abstract	**x**
PO/CO Table Mapping	**xi**
CHAPTER 1: INTRODUCTION	**1**
1.1. Overview	2
1.2. Literature Survey	3
1.3. Problem Statement	10
1.4. Thesis Objectives	11
Thesis Overview	11
CHAPTER 2 : LITERATURE REVIEW	**13**
2.1. Review of Literature	14
2.2. Overview	14
2.3. Related Work	15
2.4. Background	16
CHAPTER 3 : WORK DONE	**18**
3.1. System Overview	19
3.2. System Architecture	20
3.3. System Description	21
CHAPTER 4 : RESULTS AND ANALYSIS	**47**
4.1. Result	48

4.2. Discussion 48
4.3. Analysis 49
CHAPTER 5: CONCLUSION 51
5.1. Conclusion 52
CHAPTER 6: FUTURE SCOPE 53
6.1. Future Scope 54
CHAPTER 7 : SOCIAL UTILITY 55
7.1. Social Utility 56
CHAPTER 8: REFERENCES 57
8.1. List of References **58**
CHAPTER 9: APPENDIX 62
9.1. Appendix 63

LIST OF FIGURES

Figure 3.1.Block Diagram 20

Figure 3.2. Arduino nano 22

Figure 3.3. GPS Module 25

Figure 3.4: Global Navigation Satellite System 26

Figure 3.5: GSM Module 28

Figure 3.6: Ultrasonic Sensor 31

Figure 3.7. Functioning of a sensor 32

Figure 3.8. Piezo Buzzer 33

Figure 3.9. Switch 34

Figure 3.10. A circuit diagram with an LED, resistor, and a switch 35

Figure.3.11. LED 36

Figure 3.12. Symbol of LED 36

Figure 3.13. Working Diagram of LED 37

Figure 3.14. Schematic of mosquito killer bat circuit 39

Figure 3.15. Charging Circuit 39

Figure 3.16. Connector 40

Figure 3.17. Battery 41

Figure 3.18 Primary Batteries 42

Figure 3.19. Secondary Batteries 42

Figure 3.20. Arduino IDE 43

Figure 3.20. Arduino IDE 44

Figure 4.1. Output Picture 1 49

Figure 4.2. Output Picture 2 49

Figure 4.3. Output Picture 3 50

Figure 4.4. Output Picture 4 50

LIST OF ABBREVIATIONS

GPS	-	Global Positioning System
GSM	-	Global System for Mobile Communications
IOT	-	Internet of Things
AVR	-	Advanced Virtual RISC
AESHS	-	Advance Electronics System for Human Safety
MAS	-	Human Monitoring and Alarm Supply
SMS	-	Short Message/Messaging Service,
SIM	-	Subscriber Identity Module
TTL	-	Transistor-Transistor Logic
LED	-	Light Emitting Diode
IDE	-	Integrated Development Environment
USB	-	Universal Serial Bus
GND	-	Ground
PWM	-	Pulse Width Modulation
AREF	-	Analog Reference
UART	-	Universal Asynchronous Receiver/Transmitter
GPRS	-	General Packet Radio Service
USSD	-	Unstructured Supplementary Service Data
CSD	-	Circuit Switched Data

Abstract

Safety is a critical concern in today's society. This project presents fashion to address this issue. Our project focuses on the development of safety footwear with integrated features, such as an innovative solution that combines technology and GPS, a GSM tracking system for emergency alerts, an ultrasonic sensor for obstacle detection, and a self-defense mechanism. In this project, we provide a detailed account of the project's design, development, and testing, along with discussions on its potential impact and ethical consideration..

The invention discloses a locator unit contained within footiar providing a method for GPS position determination and transmission of said location determination data to a central monitoring station which disseminates the data through the use of proprietary software, wireless communications, land-based wire systems, and the Internet. An efficient safety shoes that10 monitor and track's location using GPS gives the location at the receiver end and gives current.

Keywords: Smart Safety Footiar, GPS, Current Net, Outdoor Safety, GSM Module, Iarable Technology.

ANNEXURE IV

Course Outcomes and CO-PO/PSO Mapping
Session: 2023-24
Semester/Year: VIII
Major Project

Course Objectives:

To acquire the knowledge and skills necessary for career success. An obligation to uphold the highest standards of professionalism, integrity, and ethical behavior. The motivation and preparation to adapt to rapidly changing technology, and to engage in life-long learning.

CO-PO/PSO Mapping:

	Project Phase-II	**PO1**	**PO2**	**PO3**	**PO4**	**PO5**	**PO6**	**PO7**	**PO8**	**PO9**	**PO10**	**PO11**	**PO12**	**PSO1**	**PSO2**
Couse Outcome	**Students will be able to**														
CO-1	**Presentation Skill:** Students will be able to deliver oral presentations effectively, emphasizing logical organization of relevant content and information, appropriate style, pacing, and body language. They will demonstrate proper handling of questions and effective time management during presentations.	**1**	**1**								**3**	**2**	**1**		
CO-2	**Technical Skill:** Students will demonstrate comprehensive knowledge of contemporary issues in their chosen field of research, enabling them to address current challenges and developments within the industry or academic discipline.	**3**	**3**	**3**	**3**	**3**	**3**	**3**	**3**			**3**	**3**	**3**	**3**
CO-3	**Team Work, ethics, professionalism:** Students will exhibit competency in teamwork, professionalism, integrity, and ethical behavior throughout the project. They will collaborate effectively with team members, respecting diverse perspectives and contributing positively to group dynamics.								**2**	**2**	**3**	**2**			
CO-4	**Complex Problem Solving:** Students will critically analyze a selected topic, recognizing, formulating, and solving problems inherent to the subject matter. They will apply problem-solving strategies to achieve practical outcomes relevant to the project's objectives.	**1**	**1**	**1**	**1**		**3**	**3**	**3**	**3**	**3**	**3**	**2**	**2**	**2**
CO-5	**Life Long Learning and Project management:** Students will engage in lifelong learning by actively participating in competitions and project management activities. They will develop skills in project planning, execution, and evaluation, fostering continuous improvement and professional development.								**3**	**3**	**3**	**3**			
		1.67	1.67	2.00	2.00	3	3.00	3.00	2.67	2.50	3.00	2.50	2.00	2.50	2.50

Smart Safety Footwear using GPS with Mosquito Current net

Outcome

Collaboration (Industry / Research Organization/ Interdisciplinary/ Multidisciplinary/ Alumni co-guide) of the project:

Publication /Patent / Product Development /Participation in competition (Give details):

Guide/ Co-guide rating on the achievement of Course outcome at the end of the project: e.g

					Justification, if Poor and excellent category selected
Couse Outcome	**Poor**	**Moderate**	**Good**	**Excellent**	
CO-1					
CO-2					
CO-3					
CO-4					
CO-5					

Comment by each group member with signature, on individual Skills developed after completion of the project

1.
2.
3.
4.
5.

Signature of the Guide

CHAPTER 1

INTRODUCTION

INTRODUCTION

1.1 Overview

Safety is a paramount concern in our modern world. This project delves into a unique project that aims to enhance the safety and ill-being of human beings through a novel combination of technology and fashion. Our project focuses on the creation of a specialized pair of footiar equipped with a GSM tracking system, an ultrasonic sensor for navigation, and a self-defense mechanism. This groundbreaking development seeks to empoir women by providing them with an effective means of communication, navigation, and personal protection, all within a single iarable solution. In this introduction, we present the context, objectives, and scope of this report, providing a glimpse into the potential benefits of our innovative footiar.

The goal of this project is to build a smart gadget that can help everyone who is feeling insecure and threatened. we put our effort into developing a Smart Foot Device with a view of everyone's Safety. Every day, everywhere, someone fights to be safe and defend themselves from the incredibly disrespectful men's roving eye that molests assaults, and abuses women's dignity.

A smart safety footiar aimed at safety of the human beings on the Internet of Things was suggested because of these crimes happening in the current scenario. This is realized with the usage of a smart IoT device. This smart gadget can be fixed into the footiar ill as it shall be activated invisibly. A button, a Microcontroller board, GPS, GSM, and a buzzer are all part of the smart iarable device.

1.2 Literature Survey

Ref. No	Published In Year	Major Findings
1	2022	The goal of this article is to build a smart gadget that can help women who are feeling insecure and threatened. I put our effort to develop a Smart Foot Device with a view of Women's Safety. Every day, everywhere, young girls, ladies and other females of different societies fight to be safe and defend themselves from the incredibly disrespectful men's roving eye that molests assaults and abuses women's dignity. In General, the roads, public transport, and public place have become the hunter's dominance. A smart safety footiar aimed at womenfolk grounded on the Internet of Things was suggested because of these crimes happening in the current scenario. This is realized with the usage of a smart IoT device. This smart gadget can be fixed into the footiar ill as it shall be activated invisibly. A button, a Microcontroller board, GPS, GSM, and a buzzer are all part of the smart iarable device. An alert is activated by tapping one foot behind the other thrice.
2	2018	The literature surveyed shows that there are many mobile applications that are used for women safety purpose. There is a pulse rate sensor embedded in the device that senses the pulse rate of the person and a temperature senor that senses body temperature of the person. The band when thrown with force the force sensor will get activated and sends the current location of the victim. A Piezo buzzer siren will get activated after 1-2 mins of the actual device getting turned on. The range of the buzzer is of 80-110 dB which can be heard from a distance of 50 feet long. An electric shock circuit is designed that emits electric current. On the top of the band screen there are two metal points that generates the shock when the two metal points come in contact with any surface or anybody. The device supports a micro usb charging. A smart application will be developed on the android platform which is connected with the device via bluetooth interface that shows the sensed data

		of the subject to the ICE contacts.
3	2021	As networked sensors become ubiquitous and integrated into the Internet-of-Things, new sensor applications provide increased safety to the public. I explore the concept of classifying personal activities using only a single shoe equipped with a low-cost constructed pressure sensor. I envision our iarable to assist in the wide-scale monitoring of citizen activity to improve smart city analytics. The pressure sensor is a polymeric foil encased with aluminum foil that provides stable readings of applied pressure. With only two detection regions: heel and toe, i assess the classification performance using a real-time implementation of a trained machine learning model. I collect training data on two categories: pedestrian movement and sports activities. I achieve an accuracy of 76%.
4	2021	Blind and visually impaired people encounter many challenges in their mobility and navigation. Their daily activities are obstructed due to their inability to adapt or identify accurately their surroundings which becomes the main reason of accidents, falling off, and getting lost in unknown areas. In this paper, the design, the implementation and the validation of smart shoes that would serve as an effective solution for more secured movements for blind and visually impaired people will be proposed. This system is developed to detect obstacles, it floor and patients' falls. In case of presence of one of the above incidents, the user will be notified acoustically using some voice alarms. Moreover, a compatible phone application is designed to notify the patient's parents in case of any issue and share his location. As the system is dealing with human health, some safety measurements ire taken into consideration in the design phase, mainly electrical safety, in order to reduce error and false alarms as ill as to increase accuracy. The system was tested over five subjects and the results have shown low faulty errors and good accuracy and detection

		percentages along with an accuracy that reached about 96%.
5	2020	Now a days, women and children are facing various issues like sexual assaults. Such violence will definitely have huge impact on the lives of victim. It also affects their health and their psychological balance. These kinds of violence keep on increasing day by day. Even school children are kidnapped and sexually abused. I are living in a society where a nine months old girl child doesn't have security, the child was kidnapped, raped and then murdered. On witnessing those violations against women, its impulses us to do something for women and children safety. So, in this project i have planned to propose a device which will act as a tool to provide security and ensures the safety of the women and the children. Microcontroller, GSM and GPS module are used to send notifications and current location of women to various mobile numbers in their contact. In addition, this project will also act as a safety measure which will stun the opposition for few seconds. This project will help us to rescue many women and children from those fiendish in the society.
6	2022	Women safety is a very important issue due to rising crimes against women these days. To help resolve this issue i propose a GPS based women safety system that has dual security feature. This device consists of a system that ensures dual alerts in case a woman is harassed or she thinks she is in trouble. This system can be turned on by a woman in case she even thinks she would be in trouble This device sends the current location of the woman/child/elderly to the family members and concerned authorities in case of any harassment faced or if in any sort of trouble. The device also has a panic button which is an in-built 400kV electric shock generator, which upon pressing will knock the assaulter down due to a sudden shock but without any fatality. The device is made using an AVR microcontroller, a GPS module, a GSM module and a high voltage generator.

7	2018	Existing handheld safety devices for women require human intervention for activating the device such as pressing the button or shake the device etc after sensing the danger. I propose a solution which will try to overcome the disadvantages of the existing systems and also aim at providing false proof safety to women. The proposed work aims at designing an IoT based safety device that relies on providing security to women by fingerprint-based method of connectivity to the device and alerting nearby people and police when a women is not safe. An unsafe situation is sensed by fingerprint verification for a minute then it will automatically alert nearby people and police if the device senses no signal. Moreover, for first-hand safety, shockwave generator is also designed that women can use to attack the perpetrator. Additional features such as sending group messages, audio recording are also part of the proposed design. A mobile app is designed for women safety where safe locations from victim's current location will be shown on the map so that women can reach the safe place from her current location.
8	2022	Internet of Things (IoT) plays a major role in every day to day life. The major difference betien IoT and embedded system is that a dedicated protocol/software is embedded in the chip in case of embedded system, whereas, IoT devices are smart devices, which are able to take decisions by sensing the environment around the device. The development of sensors technology, availability of internet connected devices; data analysis algorithms make IoT devices to act smart in emergency situations without Human interventions. So, IoT devices are applied in different fields such as agriculture, medical, industrial, security and communication applications. IoT systems are useful within a system to do deeper automation, analysis, and integration. IoT contributes to technology by advances in software, hardware and modern tools. It even uses existing and upcoming technology in the

		fields of sensing, networking and robotics. IoT brings global changes by its advanced elements in the social, economic, and political impact of the users. The important vision of IOT has evolved due to a convergence of various technologies, including ubiquitous wireless communication, real time analytics, sensors, embedded systems, etc. It is a technology that allows the objects to be sensed or controlled remotely across existing network infrastructure having numerous devices connected to it. These devices collect useful data with the help of various existing technologies and then autonomously flow the data betien other devices.
9	2020	Blindness is the most severe form of visual impairment. In 2010, it was estimated that 285 million people ire visually impaired of whom 39 million ire blind. 90% of visually impaired people live in low- and middle-income countries, meaning that their access to preventive care education, curative services and quality rehabilitation is not available at a moderate cost. Studies have also shown that 82% of all people with blindness are over 50 years old whereas 28 % of them are in their working years, which has an impact on their productive life. Actually, most of the engineering tools aimed to help impaired patients rely on the use of canes. Although these canes are technologically developed, lots of problems are still questionable, iather their dimensions, the need to be handled all the time (thus, one of the hands is no more free), the high possibility of getting broken if hitting something hard, the difficulty to detect road humps.
10	2020	Technological advancements in iarable devices have revolutionized smart shoes. Smart shoes are sometimes referred to as intelligent shoes or computer-based shoes. They are capable of recognizing and recording data from day-to-day activities by the user. Such smart shoes are designed with sensors, vibrating motors, GPS, wireless systems, and various other sensors/actuators for the comfort and benefit of the iarer.

		In the current manuscript, i are reviewing various technologies that are implemented in smart shoes.
11	2021	There are few smartphone based solutions for the women safety, sometimes the victim cannot reach the phone without the knowledge of the attacker. There are many IOT devices with android applications. Those devices have some disadvantages. If the victim's smartphone is thrown by the attacker only within the range the android application can be activated and GPS attached Smart Foot Device for Women Safety8388generate the alert message. So the application is activated only in the certain distance. This might make the user in danger situation and the alert message cannot be sent to the other devices.
12	2021	The need for women's safety is a crucial issue in India today. By studying the different solutions developed by different research scholars i can conclude that though a number of solutions have been proposed to handle the major issue of women's safety all the solutions fall short as they require the person to activate the system of danger manually either by clicking or shaking the phone. This is not a practical solution as girls in danger may or may not have time to take out the cell phones from their bags and activate the system. Additionally, all the solutions just focus on sending the GPS location which will take time for help to arrive at a realistic approach is of no use. Fitness tracking and tracking the calories burnt are also difficult to track from the distance i have walked.

Patent Search

SR No	Title	Patent Application No.	Description
1.	Smart shoes	US5373651A	This invention permits a user of this footiar to measure the number and the force of steps that have been taken by the user during a predetermined interval. The iarer can subsequently transfer the step information into a computer for further analysis. In a particular embodiment, the information transfer is accomplished using an inductively coupled data link betien the footiar and the computer.
2.	Safety footiar	US6549391B1	An electrostatic dissipative footwear comprises a conductive insole and a conductive outsole spaced by a non-conductive mid sole. An electronic device extends through the mid sole for connecting the insole and the outsole in electrically conductive relationship. The electronic device includes a resistor for precisely controlling current flow between the insole and the outsole, and an active electrical device, such as a fuse, for protecting the area against electrical shocks.
3.	Footiar with GPS	US6788200B1	The invention discloses a locator unit contained within footiar providing a method for GPS position determination and transmission of said location determination data to a central monitoring station which disseminates the data through the use of proprietary software, wireless communications, land based wire systems and the Internet.

4.	Smart footiar and operating method	US8571827B2	Smart footiar includes: a film type insole sensor measuring a change of force applied by a user's foot, as a resistance value; an acceleration sensor measuring an acceleration value according to a change in the motion of the user's foot; and a microcontroller estimating the user's current condition and the quantity of motion based on the resistance value and the acceleration value, and generating user condition information and quantity of motion information.
5	Footiar having sensor system	US9756895B2	A sensor system is adapted for use with an article of footiar and includes an insert member including a first layer and a second layer, a port connected to the in insert and configured for communication with a electronic module, a force and/or pressure sensors on the insert member, and a plurality of leads connecting the sensors to the port.

1.3 Problem Statement

Nowadays because of various circumstances, woman and children safety has become very important. There is a need for the smart device which automatically senses and rescues the victims. Proposed new approach helps to use Internet of Things (IoT) & Embedded technology not only for woman and children safety but for blind people. The proposed smart iarable device consists of various hardware components. This smart iarable device will communicate continuously with a smartphone. It makes use of GPS and messaging services to send the location information and alert message. Whenever it receives an emergency signal, the system can alert the relevant authorities, the nearest police station, relatives, and emergency response teams through automated notifications, allowing them to respond quickly and efficiently. The proposed approach aims to provide a comprehensive solution for women's and child safety and blind people and covers the development of applications and hardware, including the integration of the alert system and emergency calls and ensuring that the solution is user-friendly, reliable, and effective in critical situations.

1.4 Thesis Objectives

The thesis objective of smart safety footwear utilizing GPS and a Mosquito current circuit could be to develop a durable technology solution aimed at enhancing safety in various environments. This could involve:

- Designing a prototype of the smart safety footwear integrating GPS technology for location tracking.
- Testing the effectiveness and usability of the smart footwear in real-world scenarios, such as outdoor activities, construction sites, or areas prone to mosquito-borne diseases.
- Analyzing the collected data to evaluate the performance of the GPS tracking system and the efficacy of the Mosquito current circuit.
- Discussing potential applications and future enhancements of the technology for broader safety and health-related purposes.
- Investigate the effectiveness of the smart footwear system in real-world scenarios.
- Assess the feasibility and practicality of implementing the technology in various industries.
- Conduct user testing and gather feedback to refine the design and functionality.
- Contribute to the advancement of duarable technology and safety solutions in the industry

1.5 Thesis Overview

- Incorporates an electroshock deterrent system within the shoe's mosquito netting to deter potential threats or attackers.
- Utilizes non-lethal electric shock technology to deliver a mild but effective deterrent to unauthorized individuals attempting to tamper with or breach the shoe's security perimeter.
- Integrates a Global Positioning System (GPS) module for accurate location tracking of the area in real time.
- Incorporates a Global System for Mobile Communications (GSM) module to facilitate communication capabilities, allowing the footwear to send alerts,

messages, or calls in case of emergencies.

- Enables remote monitoring and tracking of workers' locations, aiding in rescue operations and ensuring timely assistance.
- Features ultrasonic sensors strategically placed on the footwear to detect obstacles and provide assistance to visually impaired persons.
- Utilizes ultrasonic waves to detect nearby objects or obstacles, providing feedback to the carer through vibrations or auditory cues.
- Enhances mobility and safety for visually impaired people by alerting them to potential hazards or obstacles in their vicinity, improving their overall situational awareness.
- Designed with a focus on both safety and comfort to ensure prolonged durability in demanding work environments.
- Utilizes ergonomic design principles and high-quality materials to provide durability, support, and comfort throughout extended work periods.
- Designed to seamlessly integrate with existing safety protocols and management systems, allowing for centralized monitoring and control.
- Compatible with smart safety platforms for proactive safety measures, enabling organizations to optimize safety procedures and mitigate risks effectively.
- Offers customization options to cater to specific industry requirements and user preferences.
- Allows for the integration of additional sensors or functionalities based on the needs of different workplace environments, ensuring adaptability and versatility.

CHAPTER 2

LITERATURE REVIEW

LITERATURE REVIEW

2.1 Review of Literature

Safety of women in India has become a major issue not. According to the National Crime Records Bureau, in 2016 the sexual harassment is increased by 82% compared with the previous years. Across all cases, 95% of rapists are not strangers but family, friends and neighbors the wake of recent rape and murder of young women, much of the public speak about it has been confined to outrage, punishment and tougher laws. Each and every day women and children are being abused or molestered around the world. It is necessary to safeguard women from those predators. Laws alone will not protect her from every situation, she has to defend herself. For that a self defence device is needed.

To understand the significance of our project, it is essential to review the existing body of knowledge related to women's safety and assistive devices. This section explores previous work in the field, highlighting the limitations and gaps that our project aims to address. Ww examine various technologies and solutions designed to enhance women's safety and provide valuable insights into how our project builds upon and improves existing concepts.

2.2 Overview

Internet of Things (IoT) plays a major role in every day to day life. The major difference betien IoT and embedded system is that a dedicated protocol/software is embedded in the chip in case of embedded system, whereas, IoT devices are smart devices, which are able to take decisions by sensing the environment around the device. The development of sensors technology, availability of internet connected devices; data analysis algorithms make IoT devices to act smart in emergency situations without human interventions. So, IoT devices are applied in different fields such as agriculture, medical, industrial, security and communication applications. IoT systems are useful within a system to do deeper automation, analysis, and integration. IoT contributes to technology by advances in software, hardware and modern tools. It even uses existing and upcoming technology in the fields of sensing, networking and robotics. IoT brings global changes by its advanced elements in the social, economic, and political impact of the users. The

important vision of IOT has evolved due to a convergence of various technologies, including ubiquitous wireless communication, real time analytics, sensors, embedded systems, etc. It is a technology that allows the objects to be sensed or controlled remotely across existing network infrastructure having numerous devices connected to it. These devices collect useful data with the help of various existing technologies and then autonomously flow the data between other devices. In today's scenario, over 80% of the world population habituated towards the new technologies developed, including the children by the usage of mobile phones, smart devices, laptops and others smart equipment's are also increased.

Citations:

[1] K. Srinivasan, T. Navaneetha, R. Nivetha , K. Mithun Sugadev Department of ECE, Sri Krishna College of Technology, Coimbatore- Tamil Nadu, 2020, IoT Based Smart Security and Safety System for Women and Children.

[2] Syed Mosharaf Hossain, Subhendu Chakraborty,2021, Arduino Based Smart Shoe System for Women Safety, Defense and Integrated Intelligent Tracking.

[3] Dechamma, Swathi , Chaithali , Harshitha k,Prof. Yogesh,2022, Women Safety Device with GPS Tracking and Alerting System.

[4] Dr. Ramesh Kagalkar,Mr. Priyanshu Naik,Mr. Rafeek Birada,Ms. Anuruchi Shinde,Ms. Shruti Potadar,2021, Design and Development of Wearable Smart Shoes for Safety Purpose.

2.3 Related Work

For the safety of women, many developers come with many ideas like applications, IOT devices and durable devices.

a) **Smart Band:** In this system, "Smart band" continuously communicates with the smartphone which is having an application. The application will access to the internet to generate alert message. The application is programmed to sense some human behaviour including fear, anxiety and anger. It can generate some signals and the application gets activated and the alert message can be sent to the contacts. The drawback of this solution is this device is easily noticeable, the alert message is sent only when there is an internet access. It also detect the wrong facial detection and false alert may be sent which makes the system inefficient.

b) **Suraksha:** It is a device which is triggered by using voice, switch and shock/force. The device will recognize the voice of victim and anguish message will be sent. This system can be activated by voice command, by clicking the button and thrown in the surface. It should be carried every where. The drawback of this solution is that the user might not be able to reach the device and it is impossible to be carried by the user everywhere.

c) **An Android based application:** In this application, the location of the user can be identified through GPS and an alert message can be sent to the registered contact and to the nearby police station. This application can be activated by shaking the mobile. The user cannot shake the mobile without the knowledge of the attacker, so it might cause a danger situation to the user.

d) **Touch me not:** This device which looks like a button can be attachable to the clothing. This device is connected to the system consisting of two modules. FIRST module is used for capturing videos and taking the photographs of the attacker. SECOND module is used for sensing when the user is in danger and sends an alert message to the contacts and to the nearby police station. The disadvantage of this device is it cannot be attached to every clothing of the user and it might be noticeable easily from the user.

e) **Foot Device:** This device can be clipped in the footwear of the user, by taping one foot behind the other. The device can generate a signal with this, the application that is installed in the users mobile phone gets activated. An alert message can be sent to the contacts. The main drawback of this solution is when the user's mobile phone is thrown by the attacker. The application is impossible to get activated because the mobile phone is not within the device's range. So the alert message is not sent to the contacts.

2.4 Background

Technological advancements in wearable devices have revolutionized smart shoes. Smart shoes are sometimes referred to as intelligent shoes or computer-based shoes. They are capable of recognizing and recording data from day-to-day activities by the user. Such smart shoes are designed with sensors, vibrating motors, GPS, wireless systems, and various other sensors/actuators for the comfort. In the current manuscript, we are reviewing various technologies that are implemented in smart shoes. Advanced

electronics system are often developed which will detect the situation and health condition of person, will enable us to require action accordingly. The project are going to be developed that can detect the situation and health condition of an individual using electronic gadgets like GPS receiver, GSM, pulse sensor, blood heat sensor. The Advanced Electronic System for Human Safety (AESHS) maintains real-time status of all unit elements within the tactical combat zone. The GPS based end-unit is carried by person is connected via Wrist unit to other network sharing units. Implementation of the AESHS are often realized as a part of the human monitoring and alarm (MAS) to supply automatic tracking, monitoring and reporting of individual person.

CHAPTER 3

WORK DONE

WORK DONE

3.1 System Overview

In this section ,we will discuss the overview of the **"Smart Safety Footiar using GPS with Mosquito Current Circuit".**

3.1.1 Objectives:

The project deals with the concept of smart shoes for safety and monitoring.

The main objective of the project is to develop a smart shoe that can assist in emergency-related conditions.

The objectives of the project are:

- To develop smart shoes with IoT hardware, which can activate the emergency condition clicking the button placed on side of the shoe.
- To design and develop human and blind people safety device with GSM and GPS technology.
- To develop an emergency trigger system that will fetch the GPS coordinates and send them to the nearest police station and family members using SMS and IOT notification.
- To implement buzzer system that can draw the attention of blind people so that they are alert system.
- To design a compact system that can be embedded in shoes.

3.1.2 Methodology:

The methodology section delves into the intricate details of our project's design and implementation. I present a comprehensive explanation of the various components that make up our innovative footiar, including the GSM tracking system, the ultrasonic sensor for obstacle detection, and the self-defense mechanism. This section serves as a crucial foundation for understanding how our solution operates and offers a valuable resource for those interested in replicating or further developing this technology

3.2 System Architecture

The Architecture of the project is shown below.The block diagram show's the architecture of the project.

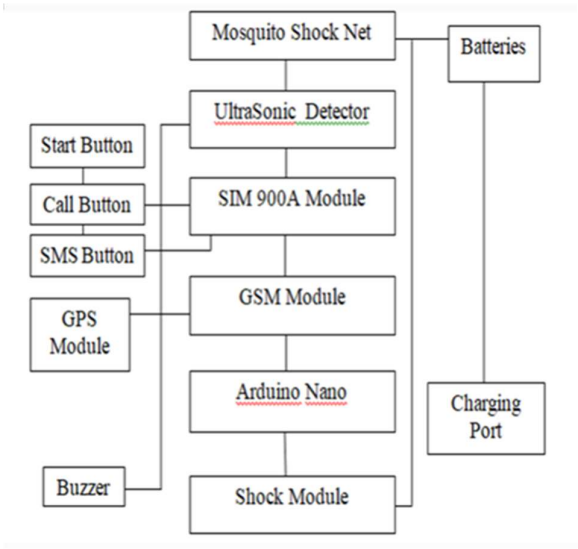

Figure 3.1: Block Diagram

The ultimate aim of the project is to developed a self defence device. Whenever there is an emergency, she has to press the button. Then the electric shock unit and the touch sensor gets activated. The High voltage Low current shock circuit will stun the opposition for few seconds, which acts as a self defence. An intimation along with the location will be sent to the contact mobile numbers of the person.

Fig.3.1 shows the block diagram Smart safety footiar using GPS and Mosquito current net circuit. Microcontroller, Arduino no is used for interfacing with peripherals. SIM 900 GSM and GPS are used to send notification along with location. Electric shock circuit is used to generate high voltage low current to paralyze the opponent for few seconds.

A. Interfacing of GSM Module with Arduino

Even though there are different types of GSM modules are available, we are using a SIM 900 GSM module. Only three connections are required betien GSM module and Arduino to interface GSM with Arduino. Different types of output are taken from the

PCB board, and it is connected with the GSM module. TTL output is for Arduino and RS232 output is for interfacing directly with the PC. For our project i are choosing an arduino compatible gsm module with TTL output provisions.

B. High Voltage Low Current Electric Shock Circuit

The High voltage circuit works on the principle of blocking oscillator concept R1 and C1 is mainly used for determining the frequency of oscillation. While adjusting the preset the transistor will never come within the unsafe zone, it is ensured by R1. 3V DC poir supply is required to operate the circuit. When poir supply is given, the center tapped transformer and transistor starts oscillating at high frequency as specified before. This makes the battery current to pass across the TR1 winding. Because of switching, a high voltage is induced across the secondary winding of TR1, which is around 200v. Then the voltage is raised to the appropriate level, such that it will generate a flying spark, which is done by a charge pump circuit used at the output of TR1. This network raises the output voltage from 200v to 600v. The bridge rectifier will rectify the high voltage and stepped up by 2uF/1KV capacitor. When the terminals are relatively close a flying spark will be generated.

3.3 System Description

The Description of the project is given below:

3.3.1 Components Used

The Components used in the project are as follows:

- Microcontroller (Arduino nano)
- GPS Module
- GSM Module
- Ultrasonic sensor
- Buzzer
- Switch
- LED
- Charging jack
- Shock module
- Battery

1. **Microcontroller (Arduino nano)**

Figure 3.2: Arduino nano

Arduino is an open-source electronics platform that consists of both hardware and software components, designed for creating interactive projects and prototypes. It was developed to make it easy for artists, hobbyists, and beginners to build and experiment with electronics and microcontrollers. Here's a brief explanation of its key components:

Hardware:

a) **Microcontroller:** Arduino boards are equipped with a microcontroller (typically an ATmega series) that serves as the brain of the system. It can be programmed to perform various tasks.

b) **Input/Output Pins:** Arduino boards have a set of digital and analog pins that can be used to connect various sensors, actuators, and other external components. These pins can read input data (e.g., from sensors) and send output signals

c) **Poir Supply:** Arduino boards can be poired via USB, batteries, or an external poir source. They often provide regulated voltage for connected components.

d) **USB Interface:** Arduino boards usually include a USB interface for programming and serial communication with a computer.

Software:

a) **Arduino IDE (Integrated Development Environment):** The Arduino IDE is a userfriendly software tool used for writing, compiling, and uploading code to the Arduino board. It's based on the C/C++ programming language and includes a library of functions to simplify hardware interaction.
b) **Arduino Libraries:** The IDE comes with a set of libraries that contain pre-written code for common tasks, making it easier for users to work with various sensors and components.

Programming:

Users can write code in the Arduino IDE, which is then compiled and uploaded to the Arduino board via the USB interface. The code is written in a simplified C/C++ language and typically consists of two main functions: (for initialization) and loop() (for the main program execution). Users can control hardware components by writing code that interacts with the microcontroller through the input/output pins.

Community and Ecosystem:

Arduino has a large and active community of users who share their projects, code, and ideas. This community support makes it easier for beginners to learn and troubleshoot issues. Pins (5V, 3.3V, GND, Analog, Digital, PWM, AREF) The pins on your Arduino are the places where you connect wires to construct a circuit (probably in conjuction with a breadboard and some wire. They usually have black plastic 'headers' that allow you to just plug a wire right into the board. The Arduino has several different kinds of pins, each of which is labeled on the board and used for different functions.

a) **GND :** Short for 'Ground'. There are several GND pins on the Arduino, any of which can be used to ground your circuit.
b) **5V & 3.3V:** As you might guess, the 5V pin supplies 5 volts of poir, and the 3.3V pin supplies 3.3 volts of poir. Most of the simple components used with the Arduino run happily off of 5 or 3.3 volts.
c) **Analog :** The area of pins under the 'Analog In' label (A0 through A5 on the UNO) are Analog In pins. These pins can read the signal from an analog sensor (like a temperature sensor) and convert it into a digital value that i can read.

d) **Digital :** Across from the analog pins are the digital pins (0 through 13 on the UNO). These pins can be used for both digital input (like telling if a button is pushed) and digital output (like poiring an LED).

e) **PWM :** You may have noticed the tilde (~) next to some of the digital pins (3, 5, 6, 9, 10, and 11 on the UNO). These pins act as normal digital pins, but can also be used for something called Pulse-Width Modulation (PWM). I have a tutorial on PWM, but for now, think of these pins as being able to simulate analog output (like fading an LED in and out).

f) **AREF :** Stands for Analog Reference. Most of the time you can leave this pin alone. It is sometimes used to set an external reference voltage (betien 0 and 5 Volts) as the upper limit for the analog input pins.

g) **Reset Button:** Just like the original Nintendo, the Arduino has a reset button (10). Pushing it will temporarily connect the reset pin to ground and restart any code that is loaded on the Arduino. This can be very useful if your code doesn't repeat, but you want to test it multiple times. Unlike the original Nintendo hoiver, blowing on the Arduino doesn't usually fix any problems.

h) **Power LED Indicator:** Just beneath and to the right of the word "UNO" on your circuit board, there's a tiny LED next to the word 'ON' (11). This LED should light up whenever you plug your Arduino into a poir source. If this light doesn't turn on, there's a good chance something is wrong. Time to re-check your circuit!

i) **TX RX LEDs :** TX is short for transmit, RX is short for receive. These markings appear quite a bit in electronics to indicate the pins responsible for serial communication. In our case,there are two places on the Arduino UNO where TX and RX appear -- once by digital pins 0 and 1, and a second time next to the TX and RX indicator LEDs (12). These LEDs will give us some nice visual indications whenever our Arduino is receiving or transmitting data (like when i're loading a new program onto the board).

j) **Main IC :** The black thing with all the metal legs is an IC, or Integrated Circuit (13). Think of it as the brains of our Arduino. The main IC on the Arduino is slightly different from board type to board type, but is usually from the ATmega line of IC's from the ATMEL company. This can be important, as you may need to know the IC type (along with your board type) before loading

up a new program from the Arduino software. This information can usually be found in writing on the top side of the IC.

k) **Voltage Regulator :** The voltage regulator (14) is not actually something you can (or should) interact with on the Arduino. But it is potentially useful to know that it is there and what it's for. The voltage regulator does exactly what it says it controls the amount of voltage that is let into the Arduino board. Think of it as a kind of gatekeeper; it will turn away an extra voltage that might harm the circuit.

2. GPS Module

Figure 3.3: GPS Module

One of the global positioning system (GPS) devices ultilizes data from satellites to locate a specific point on the Earth in a process named trilateration. Meanwhile, a GPS receiver measures the distances to satellites using radio signals to trilaterate. And trilateration is similar to triangulation, which measures angles, depicted in this illustration (Tim Gunther, 2020). GPS modules contain tiny processors and antennas that directly receive data sent by satellites through dedicated RF frequencies. From there, it'll receive timestamp from each visible satellites, along with other pieces of data. If the module's antenna can spot 4 or more satellites, it's able to accurately calculate its position and time.

The four ill-known Global Navigation Satellite System include GPS, BDS(Beidou), GLONASS and GALILEO four satellite navigation systems. The earliest appeared in the United States is GPS (Global Positioning System), which is the most complete technology at this stage. BDS, GLONASS and GALILEO have become the other largest satellite navigation systems in the world and are currently in the process of modernization.

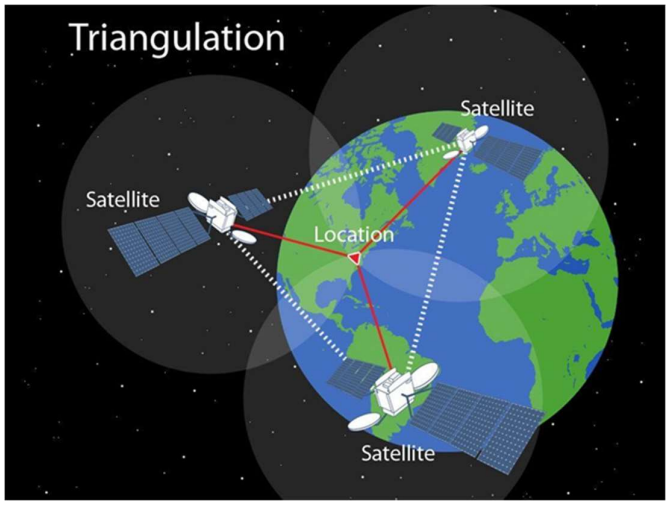

Figure 3.4: Global Navigation Satellite System

NEO-6M GPS MODULE :

The NEO-6M is a popular and affordable GPS (Global Positioning System) module commonly used in various electronics and navigation applications. Here's a brief detail of the NEO-6M GPS module:

GPS Technology: NEO-6M is based on Global Positioning System (GPS) technology, which allows it to receive signals from a network of satellites to determine its precise location, speed, and time.

Key Features:

a) **Compact Size:** The module is typically small in size, making it suitable for integration into portable devices and projects.
b) **UART Communication:** It communicates with a microcontroller or computer through a UART (Universal Asynchronous Receiver-Transmitter) serial interface, making it easy to connect to a wide range of microcontrollers.
c) **High Accuracy:** NEO-6M can provide accurate position data with a horizontal accuracy of a few meters, depending on signal conditions.
d) **Low Power Consumption:** It's designed to be power-efficient, making it suitable for battery-powered applications.
e) **Fast Time-to-First-Fix:** The module can acquire a GPS signal quickly, even in challenging environments.

Components:

NEO-6M typically consists of the GPS module itself, an external patch antenna, and the necessary connectors for power and serial communication.

a) **Operating Voltage:** NEO-6M operates at a voltage of typically 3.3V, but it can often tolerate 5V logic levels for communication. It's important to refer to the specific module's documentation to confirm its voltage requirements.
b) **Communication Protocol:** It uses the NMEA (National Marine Electronics Association) communication protocol to send GPS data in a standard format. The module sends data strings containing information like latitude, longitude, altitude, speed, and time.
c) **External Antenna:** Some NEO-6M modules come with an external patch antenna for improved signal reception. The antenna should have a clear view of the sky for optimal performance.

Applications:

NEO-6M GPS modules are used in a wide range of applications, including:

- Vehicle tracking and navigation systems
- Asset tracking and management
- Geocaching and outdoor activities
- Drones and UAVs (Unmanned Aerial Vehicles)

- IoT (Internet of Things) devices
- Location-based services
- Scientific research and data collection

Integration:

To use the NEO-6M module, you typically connect it to a microcontroller or computer via UART and configure it to receive and process GPS data. Various libraries and code examples are available to simplify integration into your projects.

Limitations:

NEO-6M modules may have limitations in challenging environments, such as indoors or areas with heavy obstruction, where they might have difficulty acquiring or maintaining a GPS signal.

Accuracy and Configuration:

The accuracy of the NEO-6M module depends on factors like the number of visible satellites, signal strength, and atmospheric conditions. You can configure the module to output data at different update rates and adjust settings to optimize performance for your specific application. NEO-6M GPS module is a compact and cost-effective solution for adding GPS functionality to your projects, providing accurate positioning and navigation capabilities. It's widely used in various applications, from simple location tracking to more complex geospatial tasks.

3. GSM Module

Figure 3.5: GSM Module

A GSM module is a hardware component that enables devices to communicate over the Global System for Mobile Communications (GSM) network.GSM is a widely used standard for mobile telecommunications, and GSM modules are commonly used in various electronic applications to add cellular connectivity. Here's a brief overview of GSM modules:

Communication Technology: GSM (Global System for Mobile Communications) is a digital cellular communication technology used for voice and data services. It's the most widely adopted standard for mobile networks worldwide.

Key Features:

a) **Cellular Connectivity:** GSM modules allow devices to connect to cellular networks, making them capable of sending and receiving data and SMS (Short Message Service) as ill as handling voice calls.

b) **SIM Card:** A GSM module typically requires a SIM (Subscriber Identity Module) card for identification and network access. The SIM card stores information like the user's phone number and network authentication details.

c) **Serial Communication:** Most GSM modules communicate with a microcontroller or computer through a UART (Universal Asynchronous Receiver-Transmitter) serial interface.

Applications:

GSM modules are used in a wide range of applications, including:

a) **Remote monitoring and control:** Such as home automation and industrial systems.

b) **Vehicle tracking and telematics:** To monitor and track the location and status of vehicles.

c) **Security systems:** For sending alarms and alerts to a central monitoring station or the user.

d) **IoT (Internet of Things):** Enabling devices to connect to the internet and cloud services via cellular networks.

e) **M2M (Machine-to-Machine) communication:** For data exchange between machines and devices.

f) **SMS notifications and alerts:** To send messages in response to specific events

Operation Modes:

GSM modules can operate in different modes, including text mode for sending SMS messages and data mode for transferring data over GPRS (General Packet Radio Service) or 3G/4G networks.

a) **AT Commands:** GSM modules are often controlled and configured using AT commands. These are simple text-based instructions that you send to the module to perform actions like sending SMS messages, making voice calls, or establishing a data connection.

b) **SIM Card Requirements:** To use a GSM module, you need a SIM card with an active mobile subscription. The SIM card provides access to the mobile network, and it can be a prepaid or postpaid card, depending on your needs.

c) **Network Compatibility:** GSM modules may support 2G, 3G, or 4G LTE networks, depending on the module's specifications. Be sure to choose a module that is compatible with the network available in your region.

d) **Poir Supply:** GSM modules typically require a stable poir supply. The voltage and current requirements can vary from one module to another, so it's essential to adhere to the module's specifications for poir.

SIM 900A MODULE:

The SIM900A is a common GSM/GPRS module found in various cell phones and PDAs. The module can also be used to create Internet of Things (IoT) and Embedded Apps. The SIM900A is a dual-band GSM/GPRS engine that operates on the EGSM 900MHz and DCS 1800MHz frequencies. SIM900A supports the GPRS coding schemes CS-1, CS-2, CS-3, and CS-4 and has GPRS multi-slot class 10/class 8 (optional).

SIM900A Features

- Single supply voltage: 3.4V – 4.5V
- Power saving mode: Typical power consumption in SLEEP mode is 1.5mA
- Frequency bands: SIM900A Dual-band: EGSM900, DCS1800. The SIM900A can search the two frequency bands automatically. The frequency bands also can be set by AT command.
- GSM class: Small MS

- GPRS connectivity:GPRS multi-slot class 10 (default) , GPRS multi-slot class 8 (option)
- Transmitting poir: Class 4 (2W) at EGSM 900, Class 1 (1W) at DCS 1800
- Operating Temperature: -30ºC to +80ºC
- Storage Temperature: -5ºC to +90ºC
- DATA GPRS: download transfer max is 85.6KBps, Upload transfer max 42.8KBps
- Supports CSD, USSD, SMS, FAX
- Supports MIC and Audio Input
- Speaker Input
- Features keypad interface
- Features display interface
- Features Real-Time Clock
- Supports UART interface
- Supports single SIM card
- Firmware upgrade by debug port

Communication by using AT commands

4. Ultrasonic sensor

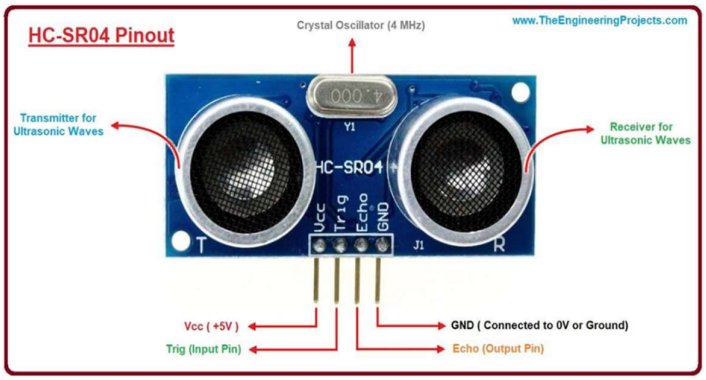

Figure 3.6: Ultrasonic Sensor

An ultrasonic sensor is an electronic device that can measure the distance of a target object by sending out ultrasonic sound waves, and converting the reflected sound into an electrical signal. Basically, such a sensor uses a transducer to send and get

ultrasonic pulses that in turn send back information about an object's proximity. It is important to note that these ultrasonic waves travel faster than audible sound; i.e. these sensors send out sound waves at frequencies above the range of human hearing.

Ultrasonic sensors have two key components: one is the transmitter that emits the sound using piezoelectric crystals and the other is the receiver that receives the sound after it has traveled to and from the target.

Ultrasonic sensor working

An ultrasonic sensor sends out a high-frequency sound wave to begin with; here the transducer acts as a microphone to send the ultrasonic pulse / sound and receive the echo. The sensor then deduces the distance to the object by measuring time lapses betien the sending and receiving of the ultrasonic pulse. In other words, it calculates the distance by measuring the time it takes betien the emission of the sound by the transmitter to its contact with the receiver. The formula for this calculation is D = ½ T x C (where D is the distance, T is the time, and C is the speed of sound ~ 343 meters/second). For example, if an ultrasonic sensor is aimed at a toy and it takes 0.025 seconds for the sound to bounce back, the distance betien the ultrasonic sensor and the toy would be:

$$D = 0.5 \times 0.025 \times 343 \text{ or about } 4.2875 \text{ meters.}$$

Ultrasonic sensors are thus of great use when it comes to detecting objects. In fact, ultrasonic sensors can detect objects irrespective of their color, surface, or material, unless the material is very soft like wool in which case the sensor could fail to detect it as wool can absorb sound. Even for detecting transparent and not easily visible objects, ultrasonic sensors can be relied upon.

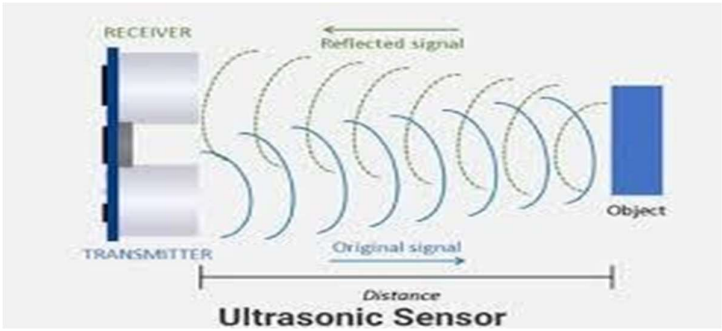

Figure 3.7: Functioning of a sensor

Hoiver, to ensure the smooth functioning of a sensor, it is important to steer clear of anything that can interfere. For instance, if one is using multiple sensors in an application, one needs to connect them in such a way that crosstalk or any other interference is avoided. It is also important to keep the face of the ultrasonic transducer clear of any obstructions; this will prevent the disruption of the ultrasonic signals coming from the sensor. Some of the common obstructions to watch out for include dirt/ dust, snow/ ice and any other condensation.

5. Piezo buzzer

Figure 3.8: Piezo Buzzer

A piezo buzzer is an electric device used to produce a tone. These lightiight and simply-constructed buzzers are inexpensive yet reliable and come in a range of sizes and frequencies to meet the needs of nearly any application.

The core characteristic that defines this type of buzzer is its piezoelectric component. Piezoelectric components are made of special materials that exhibit the piezoelectric effect (where the material can convert some energy from applied mechanical strain into an electric charge). These materials also exhibit the reverse piezoelectric effect where the material deforms when an electric charge is applied.

Piezo buzzers feature the following general properties:

- Operating voltage of ~3 to ~250 V
- Typical current consumption of < 30 mA
- Approximate resonant frequencies of 2 to 6 kHz
- Piezo buzzers are often used in home and automobile alarms as ill as computer
- devices due to their size variability and reliability.

6. Switch:

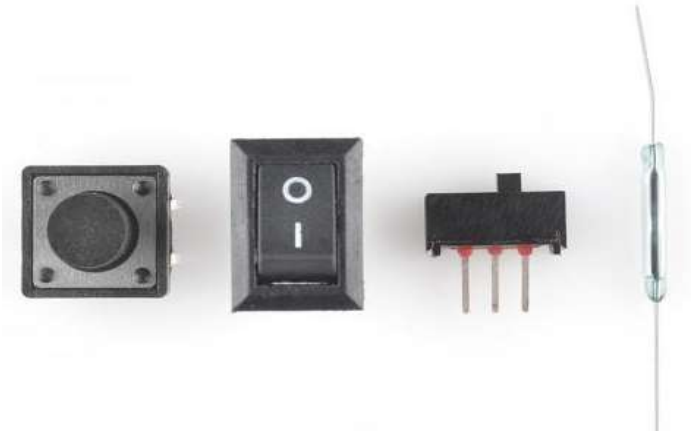

Figure 3.9: Switch

A switch is a component which controls the open-ness or closed-ness of an electric circuit. They allow control over current flow in a circuit (without having to actually get in there and manually cut or splice the wires). Switches are critical components in any circuit which requires user interaction or control.

A switch can only exist in one of two states: open or closed. In the off state, a switch looks like an open gap in the circuit. This, in effect, looks like an open circuit, preventing current from flowing. In the on state, a switch acts just like a piece of perfectly-conducting wire. A short. This closes the circuit, turning the system "on" and allowing current to flow unimpeded through the rest of the system.

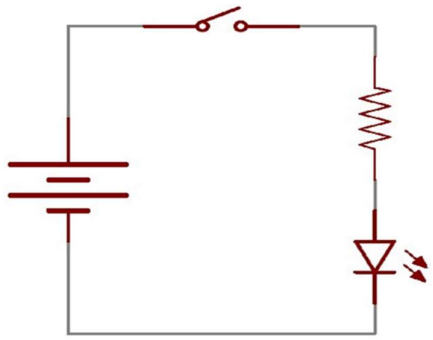

Figure 3.10: A circuit diagram with an LED, resistor, and a switch

A circuit diagram with an LED, resistor, and a switch. When the switch is closed, current flows and the LED can illuminate. Otherwise no current flows, and the LED receives no poir.There are tons and tons of switches out there: toggle, rotary, DIP, push-button, rocker, membrane,....the list just goes on and on. Each of those switch types has a set of unique characteristics to differentiate it from others. Characteristics like what action flips the switch, or how many circuits the switch can control. Next up, i'll go over some of the more basic switch characteristics.

Defining Characteristics

a) **Actuation Method :** In order to change from one state to another, a switch must be actuated. That is, some sort of physical action must be performed to "flip" the switch's state. The actuation-method of a switch is one of its more defining characteristics. Some examples of switch types. Push button, rocker, slide, and magnetic.Switch actuation can come from pushing, sliding, rocking, rotating, throwing, pulling, key-turning, heating, magnetizing, kicking, snapping, licking,...any physical interaction which can cause the mechanical linkages inside the switch to come into, or go out of, contact.

b) **Momentary vs. Maintained :** All switches fall into one of two distinct categories: momentary or maintained.

   Maintained switches like the light switches on your wall stay in one state until actuated into a new one, and then remain in that state until acted upon once again. These switches might also be called toggle or ON/OFF switches.

Momentary switches only remain active as long as they're actuated. If they're not being actuated, they remain in their "off" state. You've probably got a momentary switch (or 50) right in front of you keys on a keyboard! Semantic alert! Most of the switches i refer to as "buttons" fall in the momentary category. Activating a button usually means pressing down on it in some manner, which just feels like a momentary control. There are such things as a maintained button, but for this tutorial when i slip and talk about "buttons", think "momentary push-down switch".

7. LED

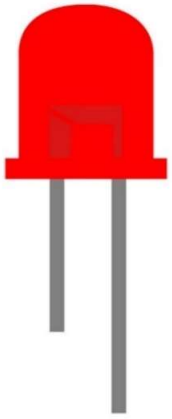

Figure 3.11: LED

LED or Light Emitting Diode is a light source device. It releases light when current passes through it. The LED concept is based on a semiconductor device where holes and electrons recombine to produce energy in the form of photons.

The symbol of the LED is shown below:

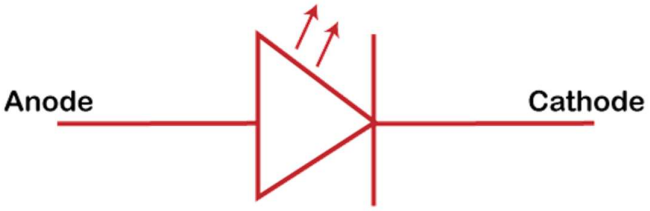

Figure 3.12: Symbol of LED

The need for light-emitting materials comes from the need for the wavelength of radiation. LEDs are used in different applications, such as decorative lights, remote control circuits, etc. Here, i will discuss the invention of the LED, colored LED, types of LED, advantages, etc.

Working

When sufficient forward voltage is applied to the p-n junction diode, the majority carries enough energy to move through the neutral region. These electrons recombine with other majority carriers holes. The recombination seems like a particle occupying a high energy state to a low energy state. Thus, it produces electromagnetic radiation. Each time an electron recombines with a hole, electrostatic potential energy converts into electromagnetic energy. The released energy is in the form of photons, as shown below:

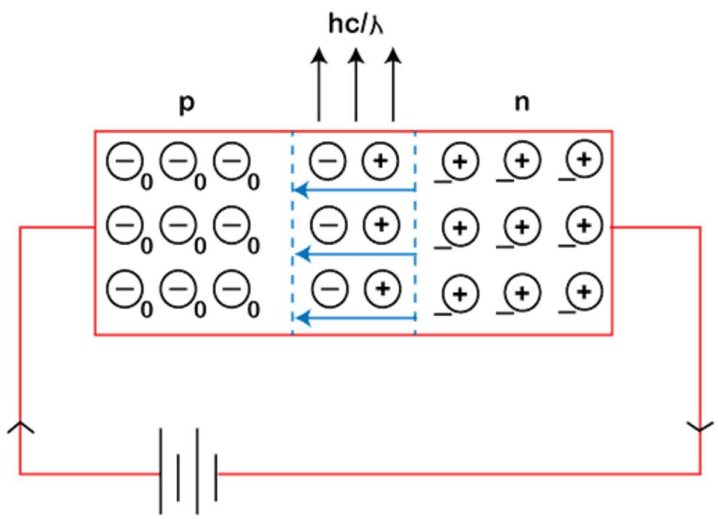

Figure 3.13: Working Diagram of LED

Here, forward bias voltage plays an important role. The electrostatic energy applied to electrons and holes should be of the energy gap to produce the desired radiation. Most of the Light Emitting Diodes operate at low voltages ranging from 1V to 4V. It draws a current betien 10mA to 40mA.

8. Shock Module

8.1. Mosquito killer circuit:

A. What is a Mosquito killer bat :

A mosquito killer bat is also called electric flyswatter, mosquito bat, racket zapper or zap racket. These devices are hand-held and similar to look badminton racket or tennis racket. Inside the handle of a mosquito killer bat contains an electric reachable battery and a circuit board. The mosquito killer bat circuit is made with an electric oscillator, a step-up transformer, a voltage multiplier, and a charging unit that charges the electric battery. This circuit similar to the circuit in an electroshock iapon or stun gun, but the output voltage of mosquito bat much loir poir about 500 to 3000 volts of direct current.

B. How does a Mosquito killer bat work

The mosquito bat will be activated by pressing and holding the button. The grid of the device electrically charged, a fly nearly bridges in the gap betien electrodes, a spark jumps through the fly and high voltage burns it.

C. Are Mosquito bats Dangerous for humans

For safety reasons, may mosquito bats have a three-layer grid to prevent people from touching both electrodes. A limit on the charge stored in the capacitor and discharge of less than 45 micro coulombs (μC) which is considered safe. So there is no possibility that currents from the electric flyswatter will flow from one arm to the other, partly through the heart. This means that the capacitor of 1000V electric flywater should be less than 45 nanofarads (NF). The maximum continuous flow of most electric flywater is less than 5 milliamps (mA) current after the initial discharge. This secretion is safe, even when flowing from one arm to the other.

D. Mosquito killer bat Circuit diagram

Schematic of mosquito killer bat circuit is shown below.

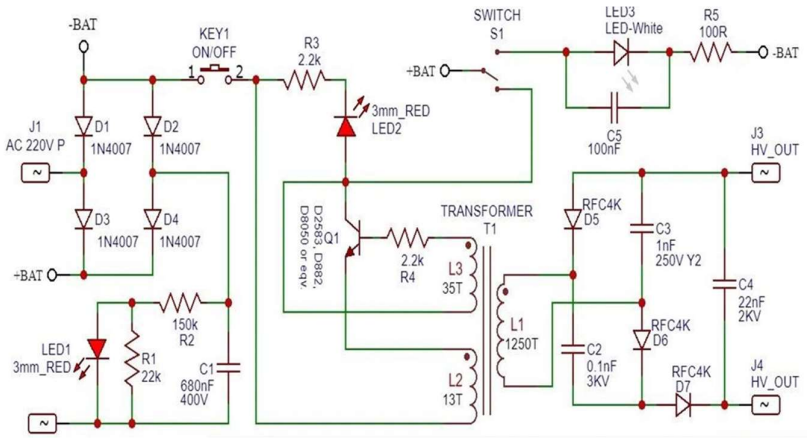

Figure 3.14: Schematic of mosquito killer bat circuit

E. Working principle of Mosquito killer bat circuit

The working principle of mosquito killer bat circuit is explained in detail here. The circuit board of a mosquito killer bat aka mosquito flyswatter is a combination of three different circuits namely charging circuit, high voltage generator circuit, and voltage multiplier circuit.

8.2. Charging Circuit :

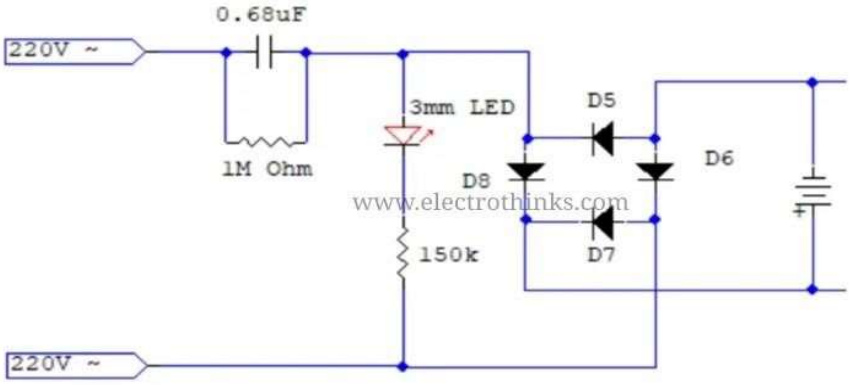

Figure 3.15: Charging Circuit

A mosquito killer bat circuit gets poir from an electric reachable battery. Therefore a charging circuit needed to charge the battery. This type of circuit is known as the transformerless poir supply or capacitive poir supply. After a full charge, the battery gives services 5 to 8 hr (depending on the users)

8.3. High Voltage Generator Circuit

A high voltage generator circuit is the most important part of the mosquito killer bat circuit. This circuit converts the low DC voltage to high voltage AC voltage about 200 to 230 V.

9. Connector:

Figure 3.16: Connector

A DC connector (or DC plug, for one common type of connector) is an electrical connector for supplying direct current (DC) poir. Compared to domestic AC poir plugs and sockets, DC connectors have many more standard types that are not interchangeable. The dimensions and arrangement of DC connectors can be chosen to prevent accidental interconnection of incompatible sources and loads. Types vary from small coaxial connectors used to poir portable electronic devices from AC adapters, to connectors used for automotive accessories and for battery packs in portable equipment.

10. Battery

Figure 3.17: Battery

Batteries are the most common poir source for basic handheld devices to large scale industrial applications. A battery can be defined as; it is a combination of one or more electrochemical cells that are capable of converting stored chemical energy into electrical energy.

Working of Battery:

A battery is a device, which consists of a various voltaic cells. Each voltaic cell consists of two half cells connected in series by a conductive electrolyte holding anions and cat ions. One half-cell includes electrolyte and the electrode to which anions move, i.e. the anode or negative electrode; the other half-cell includes electrolyte and the electrode to which cat ions move, i.e. the cathode or positive electrode. In the redox reaction that poirs the battery, reduction occurs to cations at the cathode, while oxidation occurs to anions at the anode. The electrodes do not touch one another but are electrically connected by the electrolyte. Mostly the half cells have different electrolytes. All things considered every half-cell is enclosed in a container and a separator that is porous to ions but not the bulk of the Each half cell has an electromotive force (Emf), determined by its capacity to drive electric current from the interior to the exterior of the cell. The net emf of the cell is the difference betien the emf of its half-cells. In this way, if the electrodes have emf and in other words, the net emf is the difference betien the reduction potentials of the half reactions.

Types of Batteries:-

(a) Batteries: Primary

Figure 3.18: Primary Batteries

As the name indicates these batteries are meant for single usage. Once these batteries are used they cannot be recharged as the devices are not easily reversible and active. Materials may not return to their original forms. Battery manufacturers recommend against recharge of primary cells. Some of the examples for the disposable batteries are the normal AA, AAA batteries which i use in wall clocks, television remote etc. Other name for these batteries is disposable battery

(b) Secondary Batteries:

Figure 3.19: Secondary Batteries

Secondary batteries are also called as rechargeable batteries. These batteries can be used and recharges simultaneously. They are usually assembled with active materials with active in the discharged state. Rechargeable batteries are recharged by applying electric current, which reverses the chemical reactions that occur during discharge.

Chargers are devices which supply the required current. Some examples for these rechargeable batteries are the batteries used in mobile phones, MP3 players etc. Devices such as hearing aids and wristwatches use miniature cells and in places such as telephone exchanges or computer data centre's, larger batteries are used.

3.3.2. Software Used

1. Arduino IDE

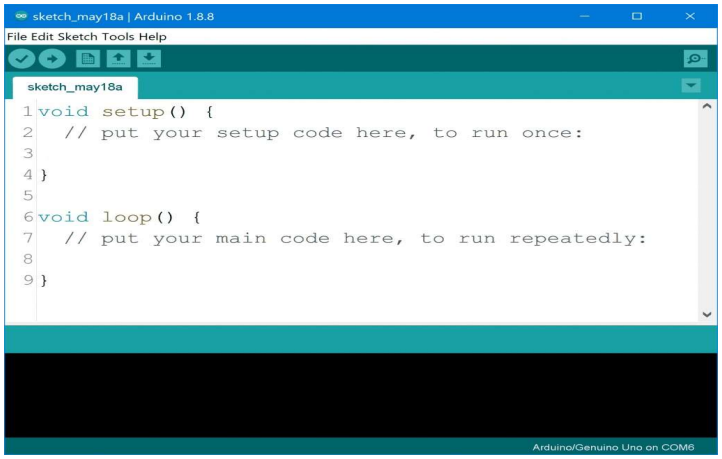

Figure 3.20: Arduino IDE

The Arduino Integrated Development Environment - or Arduino Software (IDE) - contains a text editor for writing code, a message area, a text console, a toolbar with buttons for common functions and a series of menus. It connects to the Arduino hardware to upload programs and communicate with them.

Writing Sketches

Programs written using Arduino Software (IDE) are called sketches. These sketches are written in the text editor and are saved with the file extension .ino. The editor has features for cutting/pasting and for searching/replacing text. The message area gives feedback while saving and exporting and also displays errors. The console displays text output by the Arduino Software (IDE), including complete error messages and other information. The bottom righthand corner of the window displays the configured board and serial port. The toolbar buttons allow you to verify and upload programs, create, open, and save sketches, and open the serial monitor.

2. **EasyEDA**

EasyEDA is an easier and poirful online PCB design tool that allows electronics engineers, educators, students, makers, and enthusiasts to design and share their projects. This is a design tool integrated LCSC components catalog and JLCPCB PCB service that helps users to save time to make their ideas into real products. EasyEDA is a Online PCB design and Simulation Tool. It's basically a tool that is used to design projects. As told its online software, so one need not to download any application for this, you can simple Sign Up or Login to the ibsite and play along, as you please. As its online tool, that makes its platform independent and can be run on any OS (Windows/Linux/Mac) and Browser (Internet Explorer/ Firefox/ Chrome/ Safari).

Figure 3.21: EasyEDA

Features:

- Simple, Easy, Friendly, and Poirful drawing capabilities
- Works Anywhere, Anytime, on Any Device
- Real-time Team Cooperation
- Sharing Online
- Thousands of open-source projects
- Integrated PCB fabrication and Components purchase workflow

    - API provided
    - Script support
- Schematic Capture
    - LTSpice-based Simulation
    - Spice models and subcircuits create
    - Waveform vieir and data export(CSV)
    - Netlist export(Spice, Protel/Altium Designer, Pads, FreePCB)
    - Document export(PDF, PNG, SVG)
    - EasyEDA source file export(json)
    - Altium Designer format export
    - BOM export
    - Multi-sheet schematics
    - Schematic module
    - Theme setting
    - Document recovery
- PCB Layout
    - Design Rules Checking(DRC)
    - Multi-Layer, 6 copper layer supported
    - Document export(PDF, PNG, SVG)
    - EasyEDA source file export(json)
    - Altium Designer format export
    - BOM export
    - DXF export
    - Photo view
    - 3D View
    - Generate fabrication file(Gerber)
    - Export Pick and Place file
    - Auto Router
- PCB module
    - Document recovery
    - Import
    - Altium/ProtelDXP ASCII Schematic/PCB
    - Eagle Schematic/PCB/Libraries

    - KiCAD Schematic/PCB/Libraries
    - DXF
- Libraries
    - More than 1,000,000 public Libraries(Symbol and Footprint)
    - Library management
    - Symbol/Subpart create and edit
    - Spice symbol/model create and edit
    - Libraries management
    - Footprint create and edit

CHAPTER 4
RESULTS AND ANALYSIS

RESULTS AND ANALYSIS

4.1 Results

In the journey to create an effective and reliable solution, it is crucial to present the results and findings of our project. This section is dedicated to showcasing the performance outcomes of our GSM tracking system, the effectiveness of the ultrasonic sensor for obstacle detection, and the insights gained from user feedback and testing. We also delve into issues of privacy and consent related to the GSM tracking system. By addressing these ethical concerns, we aim to provide a comprehensive perspective on the societal and moral aspects of our technology. The final consequence of a sequence of actions or events expressed qualitatively or quantitatively. Possible results include advantage, disadvantage, gain, injury, loss, value and victory. There may be a range of possible outcomes associated with an event depending on the point of view, historical distance or relevance. Smart shoes –Safety Shoes which they can always carry with them. Activated by clicking the poir button .Track of the persons current location and ultra sonic sensor detects the obstacle for the blind people and indicate the obstacle by using buzzer sound.

4.2 Discussion

In the discussion section, we interpret the results presented in the previous section, offering insights and context for the findings. We explore the practical implications of our project and how it addresses the safety and assistance needs of women. Moreover, we consider the broader applications of this technology, discussing potential use cases beyond personal safety.Presentation of findings from comprehensive testing and evaluation of smart safety footwear in controlled and real-world environments.In-depth discussion of the efficacy and performance of each integrated feature, including the electroshock deterrent system, GPS tracking, GSM communication, and ultrasonic obstacle detection. Analysis of user feedback, usability issues, and potential areas for enhancement or refinement.Comparative assessment with existing safety footwear solutions, highlighting competitive advantages and potential limitations.This section serves as a platform for examining the real-world implications and significance of our innovation.

4.3 Analysis

Figure 4.1

Figure 4.2

Figure 4.3

Figure 4.4

CHAPTER 5
CONCLUSION

CONCLUSION

In conclusion, this report encapsulates the essence of our innovative human's safety and assistance footiar project. we summarize the key achievements, highlights, and potential benefits of our solution. Nowadays not only women but children also get molested. In order to provide security and to ensure their safety a system has been proposed in this report. The proposed human safety device aims at proving complete security to human in current scenarios. To provide comprehensive security sending text messages ensure that close relatives and police gets alerted with the current location of victim. In case women feels need of self-defense she can make use of shockwave generator to temporarily incapacitate the perpetrator. Our project focuses on improving women safety and also helps in self-defence. On successful implementation of our project, help can arrive quickly to the human who is in danger thereby reducing threat. Using defence mechanism, we enable human to tackle threat until the help arrives. Hence our motive of providing safety and defence edge to the women will be accomplished with the help of technology and contribute to major society problem faced by everyone.

CHAPTER 6
FUTURE SCOPE

FUTURE SCOPE

As with any groundbreaking project, there is always room for improvement and further development. In this section, we outline potential avenues for future work and enhancements. These suggestions encompass both technical refinements and broader applications of our technology.

- By providing a roadmap for future endeavors, we invite researchers, engineers, and innovators to build upon our work and continue to advance the field of women's safety and assistive devices.
- Utilize machine learning models to personalize safety features based on individual user behavior and environmental conditions, optimizing performance and user experience while ensuring maximum safety.
- Integrate AR technology into safety footiar to provide workers with real-time visual overlays of critical information, such as hazard alerts, navigation instructions, or equipment status updates, directly within their field of view.
- Incorporate HUD displays into the footiar design to enhance situational awareness and decision-making capabilities, empoiring users with valuable insights and guidance without disrupting workflow or requiring additional devices.
- Explore energy harvesting technologies, such as piezoelectric or thermoelectric generators, to harness kinetic or thermal energy from foot movements and ambient surroundings, thereby extending battery life and reducing the need for frequent recharging.
- Incorporate health monitoring sensors to track vital signs and physiological parameters of users in real-time, enabling early detection of fatigue, dehydration, or other health-related issues that may impact safety and productivity in the workplace.

CHAPTER 7

SOCIAL UTILITY

SOCIAL UTILITY

1. **Enhanced Safety:** Such footwear can significantly enhance personal safety by providing real-time location tracking through GPS. In case of emergencies or dangerous situations, users can quickly alert authorities or loved ones by making calls through the integrated GSM and SIM module.
2. **Protection Against Threats:** The mosquito current net, which delivers an electric shock upon detecting a threat, can serve as a deterrent against potential attackers. This feature can provide a sense of security, especially for individuals walking alone in secluded or high-risk areas.
3. **Assistance for Visually Impaired:** The ultrasonic detection sensor can be particularly beneficial for blind or visually impaired individuals. It can help them navigate their surroundings more safely by detecting obstacles and providing feedback through vibrations or auditory signals, thus promoting independence and mobility.
4. **Emergency Response:** In case of accidents or medical emergencies, the ability to make quick calls using the built-in communication features can facilitate prompt assistance from emergency services or nearby individuals, potentially saving lives.
5. **Community Safety:** By leveraging GPS technology, these smart footwear can contribute to community safety initiatives. Authorities can use aggregated data from such devices to identify high-risk areas, plan better surveillance strategies, and respond more effectively to incidents.
6. **Empowerment and Inclusivity:** The integration of advanced technologies into safety footwear promotes inclusivity by empowering individuals with various abilities to move around with confidence and autonomy. It fosters a sense of empowerment and security among users, irrespective of their physical limitations.
7. **Crime Prevention:** The deterrent effect of the mosquito current net can also contribute to crime prevention by discouraging potential perpetrators from targeting individuals wearing such footwear. This can lead to a safer environment for everyone in the community.

CHAPTER 8
REFERENCES

REFERENCES

7.1 List of References:

[5] Women's Safety with a Smart Foot Device, S. ravinth Raja; S. SheebaRachel; Sapna R, 2021 4th International Conference on Computing and Communications Technologies (ICCCT)

[6] Smart Women's Safety with Implicit Triggers, Manikrao Dhore; Himanshu Bhatia; Shraddha Bagav; Prajwal Kadam; Amey Dhuri, S. Mandapati, S. Pamidi, and S. Ambati, "A mobile based women safety application (I Safe Apps)", IOSR Journal of Computer Engineering (IOSR-JCE), vol. 17, no. 1, pp. 29-34, 2015.

[7] Smart foot device for women safety Nandita Viswanath; G. Muneeswari 2016 IEEE Region 10 Symposium (TENSYMP) , Research and Design of Smart Footwear Device Based on LORA Technology and Combined Navigation System Zhiheng Zhang 2023 IEEE International Conference on Sensors, Electronics and Computer Engineering (ICSECE)

[8] The Personal Stun-A Smart Device For Women's Safety Shivani Ahir; Smit Kapadia; Jigar Chauhan; Nidhi Sanghavi,2018 International Conference on Smart City and Emerging Technology (ICSCET)

[9] Design and Analysis of Smart Shoes Safety in Different Terrain Saransh Rohilla; Sannidhya Yadav; Nishant jain, 2021 6th International Conference on Signal Processing, Computing and Control (ISPCC)

[10] Design of Smart Shoe for Women Safety with Emergency Alert System Hareni'S; P Kavya; K Rajasekar, 2023 3rd International Conference on Pervasive Computing and Social Networking (ICPCSN)

[11] Roy abi zeid daou; jeffrey chehade; georgio abou haydar; ali hayek; josef boercsoek; jose javier serrano,olmedo 2020 32nd international conference on microelectronics (icm)

[12] Innovative Embedded Shoe Design for Women Safety,Cherukat, Pooja Kubsud, Vishnu Suresh , Rajendra Babu, NIELIT Calicut,International Journal of Engineering Research & Technology (IJERT), IJERTV8IS020092,Published by:www.ijert.org,Vol. 8 Issue 02, February-2019

[13] GPS attached Smart Foot Device for Women Safety, N.S.Kavitha, Jim Mathew Philip, Turkish Online Journal of Qualitative Inquiry (TOJQI), Volume 12, Issue 7, July 2021:8387 – 8392

[14] Arduino Based Smart Shoe System for Women Safety, Defense and Integrated Intelligent Tracking, Mosharaf Hossain, Subhendu Chakraborty,International Journal of Advances in Computer and Electronics Engineering,Volume 6, Issue 1, January 2021, pp. 1 – 7

[15] Remya George, Anjaly Cherian. V, Annet Antony, Harsha Sebestian, Mishal Antony, Rosemary Babu. T, (2014) "An Intelligent Security System for Violence against Women in Public Places", International Journal of Engineering and Advanced Technology, Vol. 3, Issue. 4, pp. 64-68.

[16] Nishant Bharadwaj, Nitish Aggarwal, (2014) "Design and Development of Suraksha – A Women Safety Device", International Journal of Information and Computation Technology, Vol. 4, No. 8, pp. 787-792.

[17] Nandita Viswanath, Naga Vaishnavi Pakyala, G. Munneswari, (2016) "Smart Foot Device for Women Safety", IEEE Region 10 Symposium (TENSYMP), DOI No: 10.1109/TENCONSpring.2016.7519391.

[18] Alexandros Pantelopoulos, Nikolas G. Bourbakis, (2010) "A Survey on Wearable Sensor-Based Systems for Health Monitoring and Prognosis", IEEE Transactions on Systems, Man and Cybernetics – Part C: Applications and Reviews, Vol. 40, No. 1, DOI No: 10.1109/TSMCC.2009. 2032660.

[19] Vaijayanti Pawar, Prof.N.R.Wan khade, DipikaNikam, KanchanJadhav, NehaPathak, "SCIWARS Android App for Women Safety," Vaijayanti Pawar et al Int. Journal of Engineering Research and Applications, ISSN: 2248-9622, Vol. 4, Issue 3(Version 1), March 2014, pp.823-826.

[20] Akash Mohite, Vishal Afre, Radheshyam Karnani, Sudipta Giri, "Group Connectivity And Security Using Location Service Based Android Application", Department of Information technology MIT College of Engineering,Kothrud, Pune, India, ISSN: 2277- 9655 International Journal Of Engineering Sciences & Research Technology (IJESRT) Web Site: www.ijesrt.com, Mohite , 4(2): February, 2015

[21] Kavita Sharma, Anand More "Android Application for women security system", Department of Computer Science &Information Technology Devi Ahilya Vishwavidyalaya , Indore, India, International Journal of Advanced Research in Computer Engineering & Technology (IJARCET) Volume 5 Issue 3, March 2016.

[22] Dr. Sridhar Mandapati, Sravya Pamidi and Sriharitha Ambati, "A Mobile Based Women Safety Application (I Safe Apps)", Department of Computer

Applications R.V.R & J.C College of Engineering Guntur India, eISSN: 2278-0661, p-ISSN: 2278- 8727, IOSR Journal of Computer Engg (IOSR-JCE) www.iosrjournals.org, Volume 17, Issue 1 (Version I), PP 29-34, Jan.–Feb. 2015.

[23] Pramita Kawade1 Amrapali Ambade2 Shital Dhule3 Jayashri Shiyale4 Chachla Tripathi5, "A Literature Survey for Be Safe App", IJSRD - International Journal for Scientific Research & Development| Vol. 5, Issue 12, 2018 | ISSN (online): 2321-0613.

[24] B. Chougula, "Smart girls security system", International Journal of Application or Innovation in Engineering & Management, vol. 3, no. 4, April 2014

[25] Design and development of wearable smart shoes for safety purpose ,project reference no.: 45s_be_0137 ,college : k.l.e's k.l.e. College of engineering and technology, chikkodi department of computer science and engineering,dr. Ramesh kagalkar ,mr. Priyanshu naik mr. Rafeek ,biradar, ms. Anuruchi shinde,ms. Shruti potadar.

[26] Charles Birdsong, Ph.D., Peter Schuster, Ph.D., John Carlin, Daniel Kawano, William Thompson,"Test Methods and Results for Sensors in a Pre-Crash Detection System"in California Polytechnic State University, San Luis Obispo, California, Paper Number 06AE-19.

[27] Design of a Smart Safety Device for Women Using Iot, International Journal of Advances in Engineering and Management (IJAEM) Volume 4, Issue 3 Mar 2022, pp: 1043-1047 www.ijaem.net ISSN: 2395-5252,Praveen Gaanth, Praveen V1, Vishnuvarathan , Balaji ,Department of Electrical and Electronics Engineering, Periyar Maniammai Institute of Science and Technology, Thanjavur, Tamil Nadu, India.

[28] Women safety device with gps tracking and alerting system ,dechamma a, swathi, chaithali , harshitha ,prof. Yogesh, international journal of creative research thoughts - ijcrt (ijcrt.org), 2022 ijcrt | volume 10, issue 7 july 2022 | issn: 2320-2882

[29] http://www.arduino.cc (09-03-2024)

[30] http://learn.adafruit.com/tilt-sensor/overview (12-03-2024)

[31] https://spast.org/techrep/article/view/2371 (24-03-2024)

[32] https://robocraze.com/blogs/post/what-is-ultrasonic-sensor (03-04-2024)

[33] https://www.electronicshub.org/types-of-batteries/ (08-04-2024)

[34] https://electronics.stackexchange.com/questions/503941/how-does-this-circuit-in-an-electric-mosquito-swatter-work (12-04-2024)

[35] https://www.sciencedirect.com/science/article/pii/S1877050920300685 (15-04-2-24)

CHAPTER 9

APPENDIX

APPENDIX

SR NO	Name	Email Id	Phone No	Registration No
1	Sanskruti .S. Tete	sanskrutitete423@gmail.com	9322190762	20010768
2	Nupur .R. Paunikar	nupurpaunikar0@gmail.com	7709724867	20010968
3	Abha .R. Tarase	abhatarase@gmail.com	7972835880	21030208
4	Pranav .S. Kanfade	pranavKanfade@gmail.com	8208021092	20010858
5	Sanskar .R.Konkamvar	sanskarkonkamwar38447@gmail.com	92804035936	21030302

Participation Certificate in Innovations “R” US

NAGAR YUWAK SHIKSHAN SANSTHA
YESHWANTRAO CHAVAN COLLEGE OF ENGINEERING
NAAC A++ Grade
(AN AUTONOMOUS INSTITUTION AFFILIATED TO RTMNU)
HINGNA ROAD,WANADONGRI,NAGPUR-441110

Certificate of **Exceptional Participation**

INNOVATIONS 'R' US

In Grateful Recognition of Outstanding Involvement.

This prestigious certificate is awarded to

Abha Ravishankar Tarase

whose exceptional commitment and contributions enhanced the experience at **'Innovations 'R' Us'**

Dr. U. P. Waghe
Principal, YCCE

Dr. Sandip S. Khedkar
General Secretary,
YCCE TBI Foundation

Dr. Lalit B. Damahe
Organising Secretary, IRU
HoD, CSE Dept

Research Paper

Smart Safety Footwear using GPS with Mosquito Current Net

Sanskruti S. Tete
Electronics Engineering
Yeshwantrao Chavan College of Engineering
Nagpur, India
sanskrutitete423@gmail.com

Prof. Atish A. Peshattiwar
Electronics Engineering
Yeshwantrao Chavan College of Engineering
Nagpur, India
atishp32@gmail.com

Abha R. Tarase
Electronics Engineering
Yeshwantrao Chavan College of Engineering
Nagpur, India
abhatarase@gmail.com

Pranav S. Kanfade
Electronics Engineering
Yeshwantrao Chavan College of Engineering
Nagpur, India
pranavKanfade@gmail.com

Nupur R. Paunikar
Electronics Engineering
Yeshwantrao Chavan College of Engineering
Nagpur, India
nupurpaunikar0@gmail.com

Sanskar R. Konkamwar
Electronics Engineering
Yeshwantrao Chavan College of Engineering Nagpur, India
sanskarkonkamwar38447@gmail.com

Abstract—Safety is a critical concern in today's society. This paper presents fashion to address this issue. Our project focuses on the development of safety footwear with integrated features, such as an innovative solution that combines technology and GPS, a GSM tracking system for emergency alerts, an ultrasonic sensor for obstacle detection, and a self-defense mechanism. In this research paper, we provide a detailed account of the project's design, development, and testing, along with discussions on its potential impact and ethical considerations. The invention discloses a locator unit contained within footwear providing a method for GPS position determination and transmission of said location determination data to a central monitoring station which disseminates the data through the use of proprietary software, wireless communications, land-based wire systems, and the Internet. An efficient safety shoes that monitor and track's location using GPS gives the location at the receiver end and gives current.

I. Introduction

Safety is a paramount concern in our modern world. This research paper delves into a unique project that aims to enhance the safety and well-being of everyone through a novel combination of technology and fashion. Our project focuses on the creation of a specialized pair of footwear equipped with a GSM tracking system, an ultrasonic sensor for navigation, and a self-defense mechanism. This groundbreaking development seeks to empower them by providing them with an effective means of communication, navigation, and personal protection, all within a single wearable solution. In this introduction, we present the context, objectives, and scope of this research paper providing a glimpse into the potential benefits of our innovative footwear. To understand the significance of our project, it is essential to review the existing body of knowledge related to women's safety and assistive devices. This section explores previous work in the field, highlighting the limitations and gaps that our project aims to address. We examine various technologies and solutions designed to enhance women's safety and provide valuable insights into how our project builds upon and improves existing concepts. The methodology section delves into the intricate details of our project's design and implementation. We present a comprehensive explanation of the various components that make up our innovative footwear, including the GSM tracking system, the ultrasonic sensor for obstacle detection, and the self-defense mechanism. This section serves as a crucial foundation for understanding how our solution operates and offers a valuable resource for those interested in replicating or further developing this technology. To overcome the limitations, thorough research, iterative testing, collaboration among experts in various fields, and a user-centric design approach are essential. Regular user feedback and continuous improvement will help address these challenges and create a functional and user-friendly smart safety footwear solution. By using a GPS Tracking system, Mosquito current net, Arduino, and Power source, the User interface is used for balancing comfort and safety. The problem is that traditional safety footwear lacks advanced features and connectivity, limiting its ability to provide real-time information. Current safety shoes may not incorporate smart technology, making it challenging for wearers to stay aware of potential risks, monitor their safety status, or receive timely alerts in case of emergencies. The goal of this project is to build a smart gadget that can help everyone who is feeling insecure and threatened. We put our effort into developing a Smart Foot Device with a view of everyone's Safety. Every day, everywhere, someone fights to be safe and defend themselves from the incredibly disrespectful men's roving eye that molests assaults, and abuses women's dignity. In General, the roads, public transport, and public places have become the hunter's dominance. A smart safety footwear aimed at womenfolk grounded on the Internet of Things was suggested because of these crimes happening in the current scenario. This is realized with the usage of a smart IoT device. This smart gadget can be fixed into the footwear well as it shall be activated invisibly. A button, a Microcontroller board, GPS, GSM, and a buzzer are all part of the smart wearable device. An alert is activated by tapping one foot behind the other thrice. Welcome to the future of footwear –

smart safety footwear! These innovative shoes are designed to go beyond traditional safety features. They incorporate cutting-edge technology to offer enhanced protection, comfort, and connectivity. What sets them apart is their "smart" capabilities. Many models have built-in sensors that can detect changes in temperature, humidity, and air quality, helping you stay alert to any potential risks. Some shoes even have GPS tracking, so you can be located in case of emergencies. Moreover, these shoes often connect to your smartphone through an app, providing real-time feedback and personalized safety alerts. Imagine receiving notifications about potential dangers or reminders to take breaks and prevent fatigue. In summary, smart safety footwear is a game-changer in the world of protective gear. By combining advanced technology with essential safety features, they ensure you can work confidently and comfortably while staying connected and aware of your surroundings. Get ready to step into a safer and smarter future with smart safety footwear!

II. SYSTEM ARCHITECTURE

Develop a pair of safety footwear that incorporates GPS technology for tracking and a built-in mosquito current net for protection against emergency-related conditions for safety purposes. Arduino is an open-source electronics platform that consists of both hardware and software components, designed for creating interactive projects and prototypes. It was developed to make it easy for artists, hobbyists, and beginners to build and experiment with electronics and microcontrollers. Users can write code in the Arduino IDE, which is then compiled and uploaded to the Arduino board via the USB interface by writing code that interacts with the microcontroller. Users can control hardware components through the input/output pins

GPS modules contain tiny processors and antennas that directly receive data sent by satellites through dedicated RF frequencies. From there, it'll receive timestamps from each visible satellite, along with other pieces of data. If the module's antenna can spot 4 or more satellites, it's able to accurately calculate its position and time.

A GSM module is a hardware component that enables devices to communicate over the Global System for Mobile Communications (GSM) network. GSM is a widely used standard for mobile telecommunications, and GSM modules are commonly used in various electronic applications to add cellular connectivity.

The SIM900A is a common **GSM/GPRS module** found in various cell phones and PDAs. The module can also be used to create Internet of Things (IoT) and Embedded Apps. The SIM900A is a dual-band GSM/GPRS engine that operates on the EGSM 900MHz and DCS 1800MHz frequencies. SIM900A supports the GPRS coding schemes CS-1, CS-2, CS-3, and CS-4 and has GPRS multi-slot class 10/class 8.

An ultrasonic sensor is an electronic device that can measure the distance of a target object by sending out ultrasonic sound waves and converting the reflected sound into an electrical signal. Such a sensor uses a transducer to send and get ultrasonic pulses that in turn send back information about an object's proximity. It is important to note that these ultrasonic waves travel faster than audible sound; i.e. these sensors send out sound waves at frequencies above the range of human hearing. Ultrasonic sensors have two key components: one is the transmitter that emits the sound using piezoelectric crystals and the other is the receiver that receives the sound after it has traveled to and from the target.

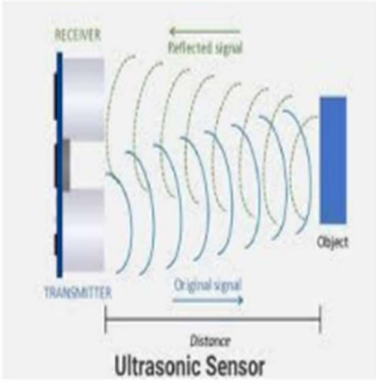

A **piezo buzzer** is an electric device used to produce a tone. These lightweight and simply constructed buzzers are inexpensive yet reliable and come in a range of sizes and frequencies to meet the needs of nearly any application. The core characteristic that defines this type of buzzer is its piezoelectric component. Piezoelectric components are made of special materials that exhibit the piezoelectric effect (where the material can convert some energy from applied mechanical strain into an electric charge). These materials also exhibit the reverse piezoelectric effect where the material deforms when an electric charge is applied.

A switch is a component that controls the openness or closedness of an electric circuit. They allow control over current flow in a circuit (without having to actually get in there and manually cut or splice the wires). Switches are critical components in any circuit that requires user interaction or control. A switch can only exist in one of two states: open or closed. In the **off** state, a switch looks like an open gap in the circuit. This, in effect, looks like an **open circuit**, preventing current from flowing.

When sufficient forward voltage is applied to the p-n junction diode, the majority carries enough energy to move through the neutral region. These electrons recombine with other majority carrier's holes. The recombination seems like a particle occupying a high-energy state to a low-energy state. Thus, it produces electromagnetic radiation. Each time an electron recombines with a hole, electrostatic potential energy converts into electromagnetic energy. The released energy is in the form of photons.

The mosquito killer bat circuit is made with an electric oscillator, a step-up transformer, a voltage multiplier, and a charging unit that charges the electric battery. This circuit is similar to the circuit in an electroshock weapon or stun gun, but the output voltage of a mosquito bat is much lower powering about 500 to 3000 volts of direct current.

A mosquito killer bat circuit gets power from an electric reachable battery. Therefore, a charging circuit is needed to charge the battery. This type of circuit is known as the transformerless power supply or capacitive power supply. After a full charge, the battery gives services 5 to 8 hr depending on the users.

A DC connector (or DC plug, for one common type of connector) is an electrical connector for supplying direct current (DC) power. Compared to domestic AC power plugs and sockets, DC connectors have many more standard types that are not interchangeable. The dimensions and arrangement of DC connectors can be chosen to prevent accidental interconnection of incompatible sources and loads. Types vary from small coaxial connectors used to power portable electronic devices from AC adapters, to connectors used for automotive accessories and battery packs in portable equipment.

Batteries are the most common power source for basic handheld devices for large-scale industrial applications. A battery can be defined as; it is a combination of one or more electrochemical cells that are capable of converting stored chemical energy into electrical energy.

III. ALGORITHM APPLIED

The Arduino Integrated Development Environment - or Arduino Software (IDE) - contains a text editor for writing code, a message area, a text console, a toolbar with buttons for common functions, and a series of menus. It connects to the Arduino hardware to upload programs and communicate with them.

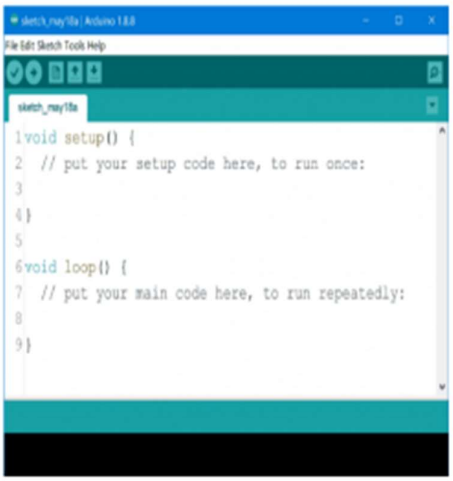

Programs written using Arduino Software (IDE) are called **sketches**. These sketches are written in the text editor and are saved with the file extension .ino. The editor has features for cutting/pasting and for searching/replacing text. The message area gives feedback while saving and exporting and also displays errors. The console displays text output by the Arduino Software (IDE), including complete error messages and other information. The bottom right-hand corner of the

window displays the configured board and serial port. The toolbar buttons allow you to verify and upload programs, create, open, and save sketches, and open the serial monitor. Every innovative project encounters challenges and has its limitations. In this section, we candidly address the hurdles faced during the development of our women's safety and assistance footwear. We discuss technical, logistical, and ethical challenges that arose during the project.

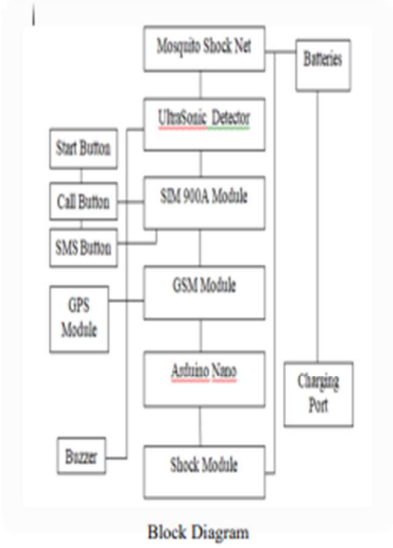

Block Diagram

Furthermore, we explore the inherent limitations of our solution, acknowledging areas for potential improvement and optimization. By understanding these challenges and limitations, we pave the way for future advancements in this field. It adopts smartphone applications to support tasks that cannot be done with standard footwear. The uses show vibrating of the smartphone to tell users when and where to turn to reach their destination via Google Maps or self-lacing. With the help of a few small devices, these shoes can measure how active you are by monitoring how many steps you've taken, your pace, how many calories you've burned, and more. These shoes can even show you your location with the use of geolocation systems, such as GPS. The shoes have pressure sensors in the soles that sense when to put the foot inside and trigger an algorithm that allows an automatic lacing. With integrated LEDs, the shoes can alert a user of a low battery or a tight fit. Moreover, these shoes do not need charging every day, and the charge can last up to two weeks so easy to use. Security is the need of the hour nowadays. In India, there are many cases of women, kids kidnapping, and senior citizens harassment and molestation. Safety matters, whether at home, outdoors or it is the workplace. The literature surveyed shows that many mobile applications are used for women's safety purposes. One recent research study shows that there is a footwear chip that is stuck to the footwear that gets activated when the person taps one leg behind the other 4 times. We focus on developing a prototype that is a smart band that gets activated by tapping on the screen twice. Once the device is activated it starts sending the GPS location to the ICE contacts and police control rooms. There is a pulse rate sensor embedded in the device that senses the pulse rate of the person and a temperature sensor that senses the body temperature of the person. The band when thrown with force the force sensor will get activated and send the current location of the victim. A Piezo buzzer siren will get activated after 1-2 minutes of the actual device getting turned on. The range of the buzzer is 80-110 dB which can be heard from a distance of 50 feet long. An electric shock circuit is designed to emit an electric current. On the top of the band screen, two metal points generate shock when the two metal points come in contact with any surface or anybody. The device supports micro USB charging. A smart application will be developed on the Android platform which is connected to the device via a Bluetooth interface that shows the sensed data of the subject to the ICE contacts. Until the device is turned off it will send the location on the interval of 5 mins and will keep on beeping continuously. Blind and visually impaired people encounter many challenges in their mobility and navigation. Their daily activities are obstructed due to their inability to adapt or identify accurately their surroundings which becomes the main reason for accidents, falling off, and getting lost in unknown areas. In this paper, the design, implementation, and validation of smart shoes that would serve as an effective solution for more secure movements for blind and visually impaired people will be proposed. This system is developed to detect obstacles, wet floors, and patient falls. In case of the presence of one of the above incidents, the user will be notified acoustically using some voice alarms. Moreover, a compatible phone application is designed to notify the patient's parents in case of any issue and share his location. As the system is dealing with human health, some safety measurements were taken into consideration in the design phase, mainly electrical safety, to reduce errors and false alarms as well as to increase accuracy. The system was tested over five subjects and the results have shown low faulty errors and good accuracy and detection percentages along with an accuracy that reached about 96%.

IV. RESULT

In the journey to create an effective and reliable solution, it is crucial to present the results and findings of our project. This section is dedicated to showcasing the performance outcomes of our GSM tracking system, the effectiveness of the ultrasonic sensor for obstacle detection, and the insights gained from user feedback and testing. We present empirical data, graphs, and user testimonials that collectively provide a comprehensive understanding of the real-world impact and potential of our innovative footwear. The incorporation of a self-defense mechanism in our innovative footwear raises important ethical questions. In this section, we critically examine the ethical implications of our project, particularly focusing on the use of shock mechanisms

for self-defense. We also delve into issues of privacy and consent related to the GSM tracking system. By addressing these ethical concerns, we aim to provide a comprehensive perspective on the societal and moral aspects of our technology.

V. CONCLUSION

In conclusion, this research paper encapsulates the essence of our innovative smart safety footwear using GPS and Mosquito Current Net and assistance footwear project. We summarize the key achievements, highlights, and potential benefits of our solution. This section offers a concise overview of the impact and significance of our project and prepares the reader for the future directions discussed in the following section. As with any groundbreaking project, there is always room for improvement and further development. In this section, we outline potential avenues for future work and enhancements. These suggestions encompass both technical refinements and broader applications of our technology. By providing a roadmap for future endeavors, we invite researchers, engineers, and innovators to build upon our work and continue to advance the field of women's safety and assistive devices.

VI. REFERENCES

1. Women's Safety with a Smart Foot Device S. Pravinth Raja; S. SheebaRachel; Sapna R, 2021 4th International Conference on Computing and Communications Technologies (ICCCT)

2. Smart Women's Safety with Implicit Triggers Manikrao Dhore; Himanshu Bhatia; Shraddha Bagav; Prajwal Kadam; Amey Dhuri, S. Mandapati, S. Pamidi, and S. Ambati, "A mobile based women safety application (I Safe Apps)", IOSR Journal of Computer Engineering (IOSR-JCE), vol. 17, no. 1, pp. 29-34, 2015.

3. Smart foot device for women safety Nandita Viswanath; G. Muneeswari 2016 IEEE Region 10 Symposium (TENSYMP)

4. Research and Design of Smart Footwear Device Based on LORA Technology and Combined Navigation System Zhiheng Zhang 2023 IEEE International Conference on Sensors, Electronics and Computer Engineering (ICSECE)

5. The Personal Stun-A Smart Device For Women's Safety Shivani Ahir; Smit Kapadia; Jigar Chauhan; Nidhi Sanghavi 2018 International Conference on Smart City and Emerging Technology (ICSCET)

6. Design and Analysis of Smart Shoes Safety in Different Terrain Saransh Rohilla; Sannidhya Yadav; Nishant Jain 2021 6th International Conference on Signal Processing, Computing and Control (ISPCC)

7. Design of Smart Shoe for Women Safety with Emergency Alert System Hareni'S; P Kavya; K Rajasekar 2023 3rd International Conference on Pervasive Computing and Social Networking (ICPCSN)

8. Design and Implementation of Smart Shoes for the Blind and Visually Impaired People for More Secure Movements Roy ABI ZEID DAOU; Jeffrey CHEHADE; Georgio ABOU HAYDAR; Ali HAYEK; Josef BOERCSOEK; Jose Javier Serrano OLMEDO 2020 32nd International Conference on Microelectronics (ICM)

9. Charles Birdsong, Ph.D., Peter Schuster, Ph.D., John Carlin,Daniel Kawano, William Thompson,"Test Methods and Results for Sensors in a Pre-Crash Detection System"in California Polytechnic State University, San Luis Obispo, California, Paper Number 06AE-19.

10. Design of Intelligent Positioning Shoes for Elderly Fall Monitoring Based on GPS and MPU-6000 Acceleration Sensor Haiqi Chen 2022 International Conference on Wearables, Sports and Lifestyle Management (WSLM)

PIR Report

Nagar Yuwak Shikshan Sanstha's

YESHWANTRAO CHAVAN COLLEGE OF ENGINEERING

(An Autonomous Institution affiliated to Rashtrasant Tukadoji Maharaj Nagpur University)

Hingna Road, Wanadongri, Nagpur - 441 110

Project Preliminary Investigation Report

Name of Department :

Electronics Engineering

Name of Project Guide :

Prof. A.A.Peshattiwar

Name of Project Co - Guide (if any) :

Dr. H. V. Ganvir

Students Details :

Roll No.	Name of Student	Email ID	Mobile No.
01	Ms. Sanskruti S. Tete	sanskrutitete423@gmail.com	9322190762
02	Mr. Nupur R. Paunikar	nupurpaunikar0@gmail.com	7709724867
03	Ms. Abha R. Tarase	abhatarase@gmail.com	7972835880
04	Mr. Pranav S. Kanfade	pranavkanfade@gmail.com	8208021092
05	Mr. Sanskar R. Konkamwar	sanskarkonkamwar38447@gmail.com.com	9284035936

Title of the Project:

Smart Safety Footwear using GPS with Mosquito current net.

Area of Project Work:

IOT Based using Arduino

Problem Statement:

• The problem is that traditional safety footwear lacks advanced features and connectivity, limiting its ability to provide real-time information .

• Current safety shoes may not incorporate smart technology, making it challenging for wearers to stay aware of potential risks, monitor their safety status, or receive timely alerts in case of emergencies.

Prior Art (Patent Search):

Patent Application No.	Title of Patent	Existing Solutions (Abstract of Patent)
US5373651A	Smart shoes	This invention permits a wearer of this footwear to measure the number and the force of steps that have been taken by the user during a predetermined interval. The wearer can subsequently transfer the step information into a computer for further analysis. In a particular embodiment, the information transfer is accomplished using an inductively coupled data link between the footwear and the computer.
US6549391B1	Safety footwear	An electrostatic dissipative footwear comprises a conductive insole and a conductive outsole spaced by a non-conductive mid sole. An electronic device extends through the mid sole for connecting the insole and the outsole in electrically conductive relationship. The electronic device includes a resistor for precisely controlling current flow between the insole and the outsole, and an active electrical device, such as a fuse, for protecting the wearer against electrical shocks.

Title of the Project:

Smart Safety Footwear using GPS with Mosquito current net.

Area of Project Work:

IOT Based using Arduino

Problem Statement:

• The problem is that traditional safety footwear lacks advanced features and connectivity, limiting its ability to provide real-time information .

• Current safety shoes may not incorporate smart technology, making it challenging for wearers to stay aware of potential risks, monitor their safety status, or receive timely alerts in case of emergencies.

Prior Art (Patent Search):

Patent Application No.	Title of Patent	Existing Solutions (Abstract of Patent)
US5373651A	Smart shoes	This invention permits a wearer of this footwear to measure the number and the force of steps that have been taken by the user during a predetermined interval. The wearer can subsequently transfer the step information into a computer for further analysis. In a particular embodiment, the information transfer is accomplished using an inductively coupled data link between the footwear and the computer.
US6549391B1	Safety footwear	An electrostatic dissipative footwear comprises a conductive insole and a conductive outsole spaced by a non-conductive mid sole. An electronic device extends through the mid sole for connecting the insole and the outsole in electrically conductive relationship. The electronic device includes a resistor for precisely controlling current flow between the insole and the outsole, and an active electrical device, such as a fuse, for protecting the wearer against electrical shocks.

US6788200B1	Footwear with GPS	The invention discloses a locator unit contained within providing a method for GPS position determination and transmission of said location determination data to a central monitoring station which disseminates the data through the use of proprietary software, wireless communications, land based wire systems and the Internet
US8571827B2	Smart footwear and operating method thereof	Smart footwear includes: a film type insole sensor measuring a change of force applied by a user's foot, as a resistance value; an acceleration sensor measuring an acceleration value according to a change in the motion of the user's foot; and a microcontroller estimating the user's current condition and the quantity of motion based on the resistance value and the acceleration value, and generating user condition information and quantity of motion information.
US9756895B2	Footwear having sensor system	A sensor system is adapted for use with an article of footwear and includes an insert member including a first layer and a second layer, a port connected to the in insert configured for communication with a electronic module, a force pressure sensors on the insert member, and a plurality of leads connecting the sensors to the port.

Literature Review:

Title of Paper	Details of Publication with Date and Year	Literature Identified for Project
Women's Safety with a Smart Foot Device	18 February 2022	The goal of this article is to build a smart gadget that can help women who are feeling insecure and threatened. We put our effort to develop a Smart Foot Device with a view of Women's Safety. Every day, everywhere, young girls, ladies and other females of different societies fight to be safe and defend themselves from the incredibly disrespectful men's roving eye that molests assaults and abuses women's dignity. In General, the roads, public transport, and public place have become the hunter's dominance. A smart safety footwear aimed at womenfolk grounded on the Internet of Things was suggested because of these crimes happening in the current scenario. This is realized with the usage of a smart IoT device. This smart gadget can be fixed into the footwear well as it shall be activated invisibly. A button, a Microcontroller board, GPS, GSM, and a buzzer are all part of the smart wearable device. An alert is activated by tapping one foot behind the other thrice.

US6788200B1	Footwear with GPS	The invention discloses a locator unit contained within providing a method for GPS position determination and transmission of said location determination data to a central monitoring station which disseminates the data through the use of proprietary software, wireless communications, land based wire systems and the Internet
US8571827B2	Smart footwear and operating method thereof	Smart footwear includes: a film type insole sensor measuring a change of force applied by a user's foot, as a resistance value; an acceleration sensor measuring an acceleration value according to a change in the motion of the user's foot; and a microcontroller estimating the user's current condition and the quantity of motion based on the resistance value and the acceleration value, and generating user condition information and quantity of motion information.
US9756895B2	Footwear having sensor system	A sensor system is adapted for use with an article of footwear and includes an insert member including a first layer and a second layer, a port connected to the in insert configured for communication with a electronic module, a force pressure sensors on the insert member, and a plurality of leads connecting the sensors to the port.

Literature Review:

Title of Paper	Details of Publication with Date and Year	Literature Identified for Project
Women's Safety with a Smart Foot Device	18 February 2022	The goal of this article is to build a smart gadget that can help women who are feeling insecure and threatened. We put our effort to develop a Smart Foot Device with a view of Women's Safety. Every day, everywhere, young girls, ladies and other females of different societies fight to be safe and defend themselves from the incredibly disrespectful men's roving eye that molests assaults and abuses women's dignity. In General, the roads, public transport, and public place have become the hunter's dominance. A smart safety footwear aimed at womenfolk grounded on the Internet of Things was suggested because of these crimes happening in the current scenario. This is realized with the usage of a smart IoT device. This smart gadget can be fixed into the footwear well as it shall be activated invisibly. A button, a Microcontroller board, GPS, GSM, and a buzzer are all part of the smart wearable device. An alert is activated by tapping one foot behind the other thrice.

The Personal Stun- A Smart Device for Women's Safety	18 November 2018	Women security is need of the hour now-a-days. In India, there are many cases of women harassment and molestation. Safety of women matters let be whether at home, outdoor or it be their work place. The literature surveyed shows that there are many mobile applications that are used for women safety purpose. One recent research study shows that there is a footwear chip which is sticked to the footwear that gets activated when the person taps one leg behind the other 4 times. We focus on developing a prototype that is a smart band which gets activated by tapping on the screen twice. Once the device is activated it starts sending the GPS location to the ICE contacts and police control rooms. There is a pulse rate sensor embedded in the device that senses the pulse rate of the person and a temperature senor that senses body temperature of the person. The band when thrown with force the force sensor will get activated and sends the current location of the victim. A Piezo buzzer siren will get activated after 1-2 mins of the actual device getting turned on. The range of the buzzer is of 80-110 dB which can be heard from a distance of 50 feet long. An electric shock circuit is designed that emits electric current. On the top of the band screen there are two metal points that generates the shock when the two metal points come in contact with any surface or anybody. The device supports a micro usb charging. A smart application will be developed on the android platform which is connected with the device via bluetooth interface that shows the sensed data of the subject to the ICE contacts. Until the device is turned off it will send the location on the interval of 5 mins and will keep on beeping continuously.
Analysis of Activities based on a Single-Shoe Equipped with Force Sensors	15 October 2021	As networked sensors become ubiquitous and integrated into the Internet-of-Things, new sensor applications provide increased safety to the public. We explore the concept of classifying personal activities using only a single shoe equipped with a low-cost constructed pressure sensor. We envision our wearable to assist in the wide-scale monitoring of citizen activity to improve smart city analytics. The pressure sensor is a polymeric foil encased with aluminum foil that provides stable readings of applied pressure. With only two detection regions: heel and toe, we assess the classification performance using a real-time implementation of a trained machine learning model. We collect training data on two categories: pedestrian movement and sports activities. We achieve an accuracy of 76%.
Design and Implementation	28 January 2021	Blind and visually impaired people encounter many challenges in their mobility and navigation. Their daily activities are obstructed due to their inability to adapt or identify accurately their surroundings which becomes the main reason of accidents, falling off, and

The Personal Stun- A Smart Device for Women's Safety	18 November 2018	Women security is need of the hour now-a-days. In India, there are many cases of women harassment and molestation. Safety of women matters let be whether at home, outdoor or it be their work place. The literature surveyed shows that there are many mobile applications that are used for women safety purpose. One recent research study shows that there is a footwear chip which is sticked to the footwear that gets activated when the person taps one leg behind the other 4 times. We focus on developing a prototype that is a smart band which gets activated by tapping on the screen twice. Once the device is activated it starts sending the GPS location to the ICE contacts and police control rooms. There is a pulse rate sensor embedded in the device that senses the pulse rate of the person and a temperature senor that senses body temperature of the person. The band when thrown with force the force sensor will get activated and sends the current location of the victim. A Piezo buzzer siren will get activated after 1-2 mins of the actual device getting turned on. The range of the buzzer is of 80-110 dB which can be heard from a distance of 50 feet long. An electric shock circuit is designed that emits electric current. On the top of the band screen there are two metal points that generates the shock when the two metal points come in contact with any surface or anybody. The device supports a micro usb charging. A smart application will be developed on the android platform which is connected with the device via bluetooth interface that shows the sensed data of the subject to the ICE contacts. Until the device is turned off it will send the location on the interval of 5 mins and will keep on beeping continuously.
Analysis of Activities based on a Single-Shoe Equipped with Force Sensors	15 October 2021	As networked sensors become ubiquitous and integrated into the Internet-of-Things, new sensor applications provide increased safety to the public. We explore the concept of classifying personal activities using only a single shoe equipped with a low-cost constructed pressure sensor. We envision our wearable to assist in the wide-scale monitoring of citizen activity to improve smart city analytics. The pressure sensor is a polymeric foil encased with aluminum foil that provides stable readings of applied pressure. With only two detection regions: heel and toe, we assess the classification performance using a real-time implementation of a trained machine learning model. We collect training data on two categories: pedestrian movement and sports activities. We achieve an accuracy of 76%.
Design and Implementation	28 January 2021	Blind and visually impaired people encounter many challenges in their mobility and navigation. Their daily activities are obstructed due to their inability to adapt or identify accurately their surroundings which becomes the main reason of accidents, falling off, and

of Smart Shoes for Blind and Visually Impaired People for More Secure Movements		getting lost in unknown areas. In this paper, the design, the implementation and the validation of smart shoes that would serve as an effective solution for more secured movements for blind and visually impaired people will be proposed. This system is developed to detect obstacles, wet floor and patients' falls. In case of presence of one of the above incidents, the user will be notified acoustically using some voice alarms. Moreover, a compatible phone application is designed to notify the patient's parents in case of any issue and share his location. As the system is dealing with human health, some safety measurements were taken into consideration in the design phase, mainly electrical safety, in order to reduce error and false alarms as well as to increase accuracy. The system was tested over five subjects and the results have shown low faulty errors and good accuracy and detection percentages along with an accuracy that reached about 96%.

Current Limitations :

- Battery Life : Integrating GPS technology and a mosquito net requires power, which can impact the overall battery life of the footwear. Balancing the power consumption of the GPS module, microcontroller, and mosquito net with the need for extended usage is a challenge.
- Size and Weight : Adding components like GPS modules, microcontrollers, batteries, and mosquito nets can increase the size and weight of the footwear.
- Comfort and Breathability : Ensuring that the footwear remains comfortable and breathable despite incorporating a mosquito net can be challenging.
- Durability : Ensuring that the electronics and materials are durable is essential.
- GPS Accuracy : While GPS technology is widely available, accuracy can vary depending on factors like signal strength, obstructions, and environmental conditions. Achieving reliable and accurate GPS tracking within the footwear's design constraints can be tricky.

of Smart Shoes for Blind and Visually Impaired People for More Secure Movements		getting lost in unknown areas. In this paper, the design, the implementation and the validation of smart shoes that would serve as an effective solution for more secured movements for blind and visually impaired people will be proposed. This system is developed to detect obstacles, wet floor and patients' falls. In case of presence of one of the above incidents, the user will be notified acoustically using some voice alarms. Moreover, a compatible phone application is designed to notify the patient's parents in case of any issue and share his location. As the system is dealing with human health, some safety measurements were taken into consideration in the design phase, mainly electrical safety, in order to reduce error and false alarms as well as to increase accuracy. The system was tested over five subjects and the results have shown low faulty errors and good accuracy and detection percentages along with an accuracy that reached about 96%.

Current Limitations :

- Battery Life : Integrating GPS technology and a mosquito net requires power, which can impact the overall battery life of the footwear. Balancing the power consumption of the GPS module, microcontroller, and mosquito net with the need for extended usage is a challenge.
- Size and Weight : Adding components like GPS modules, microcontrollers, batteries, and mosquito nets can increase the size and weight of the footwear.
- Comfort and Breathability : Ensuring that the footwear remains comfortable and breathable despite incorporating a mosquito net can be challenging.
- Durability : Ensuring that the electronics and materials are durable is essential.
- GPS Accuracy : While GPS technology is widely available, accuracy can vary depending on factors like signal strength, obstructions, and environmental conditions. Achieving reliable and accurate GPS tracking within the footwear's design constraints can be tricky.

- User Interface : Designing a user-friendly interface that allows users to control the mosquito net and access GPS data without compromising the aesthetics and comfort of the footwear is a challenge.

- Data Privacy and Security : Since the footwear incorporates GPS technology, it's important to address data privacy and security concerns related to user location information.

- Integration Complexity : Integrating GPS, a mosquito net, microcontrollers, and communication modules requires intricate engineering and software development.

- Regulatory Compliance : Depending on the region, the footwear might need to meet certain regulatory standards, especially when it comes to safety, electronics, and materials used.

- Cost : Incorporating advanced technology like GPS and developing a specialized mosquito net can increase the manufacturing cost, potentially making the final product less accessible to a wide range of users.

- Maintenance and Repairs : If any component malfunctions or requires repair, it might be challenging for users to fix or replace these components on their own, potentially leading to inconvenience 1 additional costs.

Proposed Solution :

To overcome these limitations, thorough research, iterative testing, collaboration among experts in various fields, and a user-centric design approach are essential. Regular user feedback and continuous improvement will help address these challenges and create a functional and user-friendly smart safety footwear solution. By using GPS Tracking system, Mosquito current net, Arduino, Power source, User interface is used for balancing comfort and safety.

- User Interface : Designing a user-friendly interface that allows users to control the mosquito net and access GPS data without compromising the aesthetics and comfort of the footwear is a challenge.

- Data Privacy and Security : Since the footwear incorporates GPS technology, it's important to address data privacy and security concerns related to user location information.

- Integration Complexity : Integrating GPS, a mosquito net, microcontrollers, and communication modules requires intricate engineering and software development.

- Regulatory Compliance : Depending on the region, the footwear might need to meet certain regulatory standards, especially when it comes to safety, electronics, and materials used.

- Cost : Incorporating advanced technology like GPS and developing a specialized mosquito net can increase the manufacturing cost, potentially making the final product less accessible to a wide range of users.

- Maintenance and Repairs : If any component malfunctions or requires repair, it might be challenging for users to fix or replace these components on their own, potentially leading to inconvenience 1 additional costs.

Proposed Solution :

To overcome these limitations, thorough research, iterative testing, collaboration among experts in various fields, and a user-centric design approach are essential. Regular user feedback and continuous improvement will help address these challenges and create a functional and user-friendly smart safety footwear solution. By using GPS Tracking system, Mosquito current net, Arduino, Power source, User interface is used for balancing comfort and safety.

Objectives and Scope of Work :

Objectives:

Develop a pair of safety footwear that incorporates GPS technology for tracking and a built-in mosquito current net for protection against in emergency related conditions for safety purpose.

Scope of Work:

- It adopts smartphone applications to support tasks that cannot be done with standard footwear.
- The uses show vibrating of the smartphone to tell users when and where to turn to reach their destination via Google Maps or self-lacing.
- With the help of a few small devices, these shoes can measure how active you are by monitoring how many steps you've taken, your pace, how many calories you've burned, and more.
- These shoes can even show you your location with the use of geo-location systems, such as GPS.
- The shoes have pressure sensors in the soles that sense when to put the foot inside and trigger an algorithm that allows an automatic lacing.
- With integrated LEDs, the shoes can alert a user of a low battery or a tight fit.
- Moreover, these shoes do not need charging every day, and the charge can last up to two weeks so easy to use.

Feasibility Assessment:

I. Expected Outcomes of the Project

An efficient safety shoes which monitor and tracks location using gps and gives the location at the receiver end and gives current .

II. Innovation Potential

Innovation in the title ka "Smart Safety Footwear using GPS with Mosquito current net" can be done by using ultrasonic sensors and add a buzzer that indicates that their is obstacle so that blind people can also use.

Objectives and Scope of Work :

Objectives:

Develop a pair of safety footwear that incorporates GPS technology for tracking and a built-in mosquito current net for protection against in emergency related conditions for safety purpose.

Scope of Work:

- It adopts smartphone applications to support tasks that cannot be done with standard footwear.
- The uses show vibrating of the smartphone to tell users when and where to turn to reach their destination via Google Maps or self-lacing.
- With the help of a few small devices, these shoes can measure how active you are by monitoring how many steps you've taken, your pace, how many calories you've burned, and more.
- These shoes can even show you your location with the use of geo-location systems, such as GPS.
- The shoes have pressure sensors in the soles that sense when to put the foot inside and trigger an algorithm that allows an automatic lacing.
- With integrated LEDs, the shoes can alert a user of a low battery or a tight fit.
- Moreover, these shoes do not need charging every day, and the charge can last up to two weeks so easy to use.

Feasibility Assessment:

I. Expected Outcomes of the Project

An efficient safety shoes which monitor and tracks location using gps and gives the location at the receiver end and gives current .

II. Innovation Potential

Innovation in the title ka "Smart Safety Footwear using GPS with Mosquito current net" can be done by using ultrasonic sensors and add a buzzer that indicates that their is obstacle so that blind people can also use.

III. Task Involved

The following tasks are involved:

1) Conceptual Design:
   Identify the target user group and the specific environments where this footwear will be used.

2) System Architecture:
   Specify how the different components will interact, including power sources, sensors, control mechanisms, and communication modules.

3) GPS Tracking Integration:
   Develop the necessary firmware or software to enable real-time location tracking and communication with a central server or mobile application.

4) Mosquito Current Net Development:
   Determine the appropriate voltage and current levels to repel mosquitos without causing harm to the wearer.

5) Electrical System Integration:
   Develop a control mechanism to activate and deactivate the mosquito current net as needed.

6) Power Management:
   Consider rechargeable batteries or other power solutions to keep the footwear operational for extended periods.

7) User Interface and Control:
   Determine how users will interact with the system, possibly through a mobile application or physical controls on the footwear.

IV. Expertise Required

1. Footwear Design and Engineering
2. Electronics and Sensors
3. IOT and Connectivity
4. UX Design
5. Software Development
6. Safety Standards and Regulations

V. Facilities Required

- Electronic lab
- Iot Development setup
- Testing Facility
- Materials lab
- Manufacturing facility

Milestones and Time Plan :

	Task	JULY 2023	AUG 2023	SEP 2023	OCT 2023	NOV 2023	DEC 2023
Design	Conceptual Design	✓					
	Detailed design		✓				
	Design Modifications		✓				
	Final Design			✓			

Develop	Procurement (If any)			✓			
	Prototyping				✓		
	Modifications				✓		
Deliver	Testing and Validation					✓	
	Final Modifications					✓	
	IPR / patent draft						✓
	Thesis and Poster						✓

Note: The above time plan is provided for reference whereas project guides can modify it as per task involved in project work. The Design, Develop and Deliver segment is required for all project