1.LED BLINKING

```
void setup() {
pinMode(2, OUTPUT);
}

void loop() {
digitalWrite(2, HIGH);
delay(1000);
digitalWrite(2, LOW);
delay(1000);
}
```

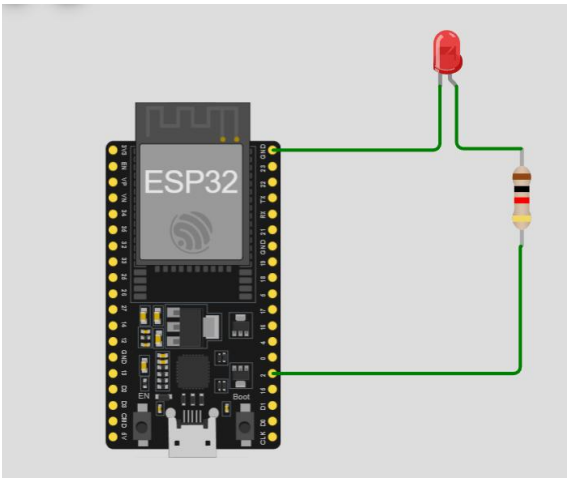

2. LED PUSH BUTTON

```
int button =0;

void setup() {
  pinMode(19, OUTPUT);
  pinMode(4, INPUT_PULLUP);
  Serial.begin(9600);
}

void loop() {
button=digitalRead(4);
if(button==LOW)
{
  digitalWrite(19, HIGH);
  Serial.println("LED IS ON");
}
else
{
  digitalWrite(19, LOW);
  Serial.println("LED IS OFF");
}
}
```

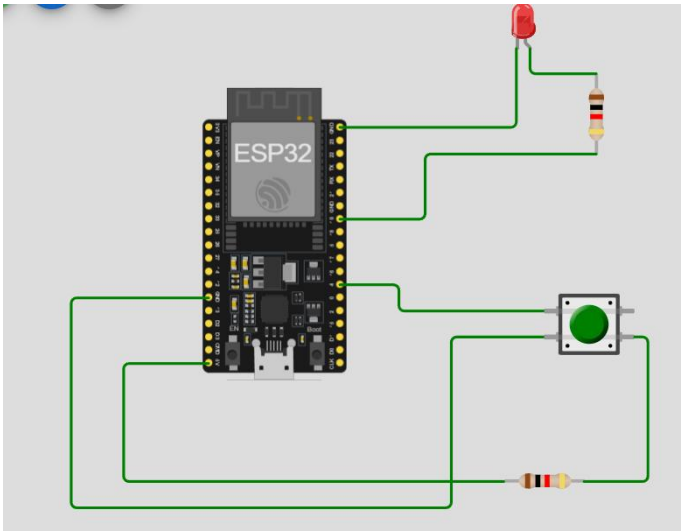

3. POTENTIOMETER

```
void setup(){
  Serial.begin(115200);
  pinMode(16, OUTPUT);
}
void loop(){
  int value =analogRead(32);
  int intensity = map(value, 0,
4095, 0, 255);
  analogWrite(16, intensity);
  Serial. println(intensity);
  delay(10);
}
```

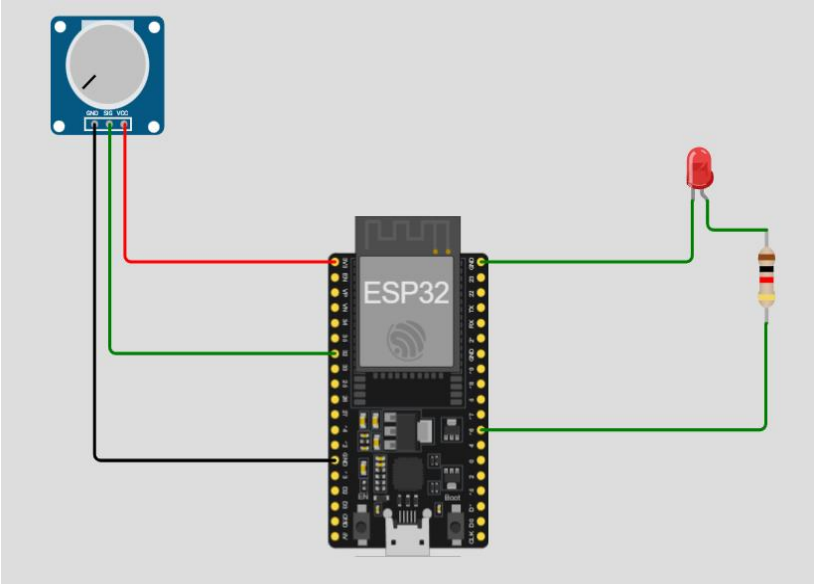

4. LDR SENSOR

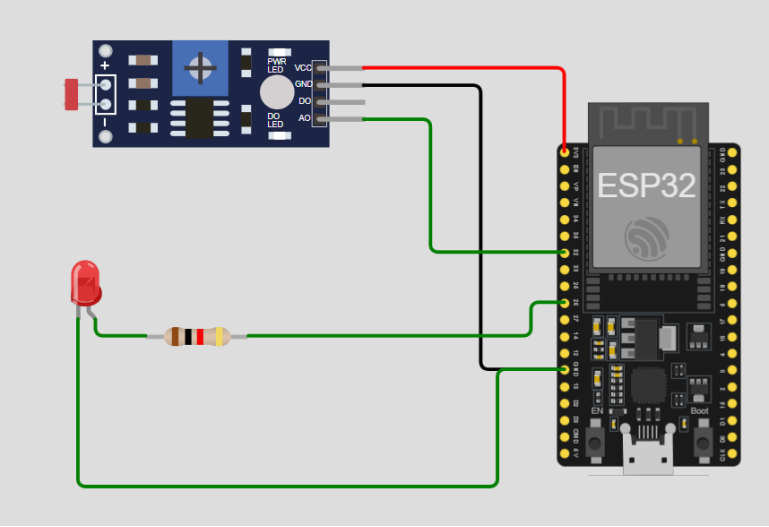


```
 void setup()
 {
   Serial.begin(9600);
   pinMode(26, OUTPUT);
   pinMode(32, INPUT);
 }
 void loop()
 {
   int LDRStatus = analogRead(32);
   if (LDRStatus <=1000)
 {
   digitalWrite(26, HIGH);
   Serial.print("Current light intensity value is ");
   Serial.println(LDRStatus);
 }
   else
 {
   digitalWrite(26, LOW);
   Serial.print("Current light intensity value is - ");
   Serial.println(LDRStatus);
 }
 }
```

5. PIR MOTION SENSOR

```
void setup()
{
  pinMode(5, INPUT);
  pinMode(26, OUTPUT);
  Serial.begin(9600);
}

void loop()
{
  int motion = 0;
  motion = digitalRead(5);
  if (motion == HIGH)
  {
    digitalWrite(26, HIGH);
    Serial.println("Motion Detected");
  }
  else
  {
    digitalWrite(26, LOW);
    Serial.println("Motion Not Detected");
  }

  delay(100);
}
```

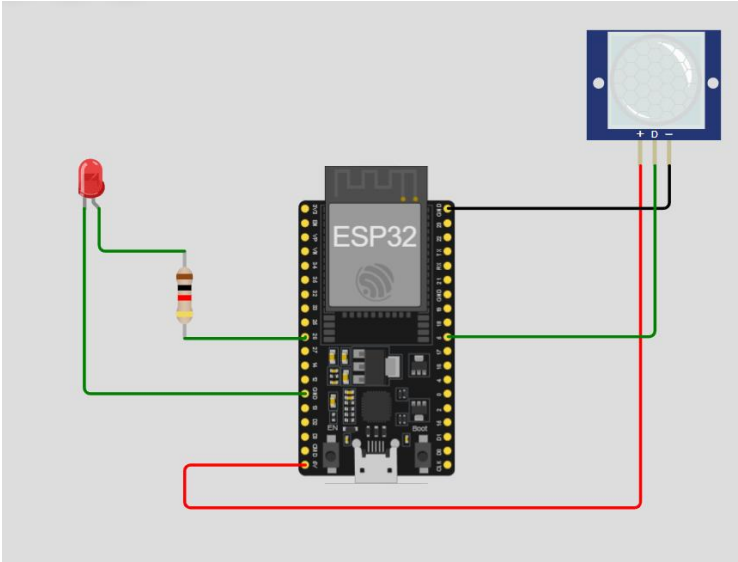

6. Temperature Measurement

```
#include "DHT.h"
#define DHT22PIN 26
DHT dht(DHT22PIN, DHT22);

void setup() {
  pinMode(15, OUTPUT);
  Serial.println("Hello, ESP32!");
  Serial.begin(115200);
  dht.begin();
}
void loop() {
  delay(1000);
  float humi = dht.readHumidity();
  float temp = dht.readTemperature();

  Serial.print("Temperature: ");
  Serial.print(temp);
  Serial.print("°C ");
  Serial.print("Humidity: ");
  Serial.println(humi);

  if (temp > 30) {
    digitalWrite(15, HIGH);
  } else if (temp < 25) {
    digitalWrite(15, LOW);
  }

  delay(1000);
}
```

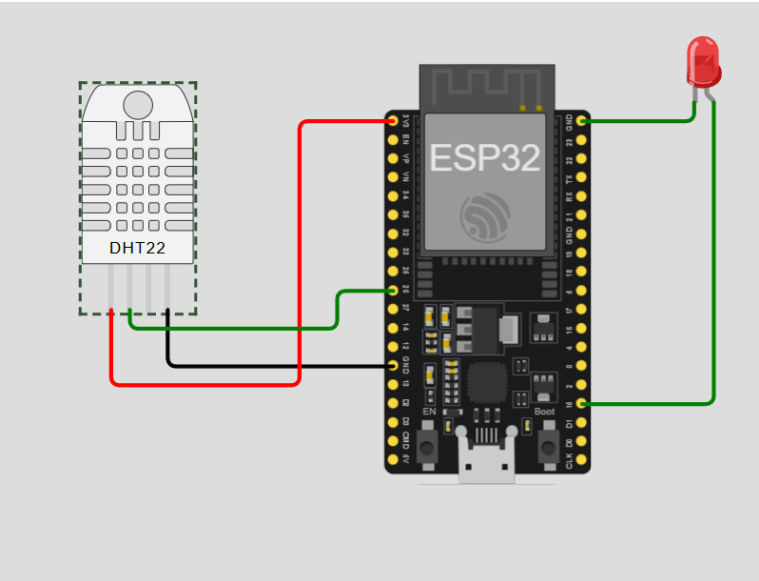

7. Distance MEASUREMENT

```
float distance;
float duration;
void setup() {
  Serial.begin(9600);
  pinMode(18, OUTPUT);
  pinMode(17, INPUT);
  pinMode(4, OUTPUT);
}

void loop() {
  digitalWrite(18, HIGH);
  delayMicroseconds(10);
  digitalWrite(18, LOW);

  duration = pulseIn(17, HIGH);
  distance = duration * 0.017;

  if (distance < 50) {
    digitalWrite(4, HIGH);
  } else {
    digitalWrite(4, LOW);
  }
  Serial.print("distance: ");
  Serial.print(distance);
  Serial.println(" cm");
}
```

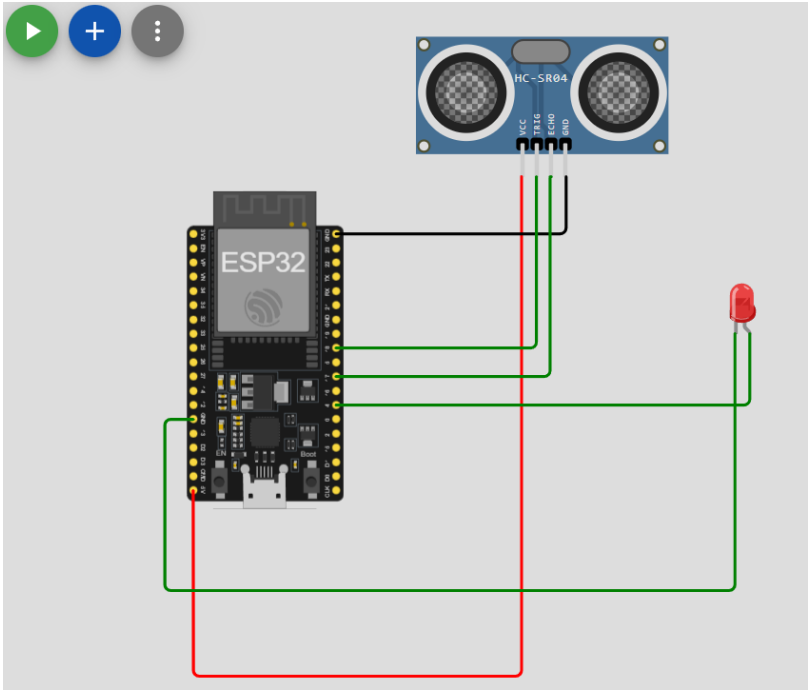

8.GAS DETECTION

```
void setup() {
  Serial.begin(115200);
  pinMode(2, OUTPUT);
}

void loop() {
  int gasValue = analogRead(34);

  Serial.print("Gas Sensor Value: ");
  Serial.println(gasValue);

  if (gasValue >= 700) {
    digitalWrite(2, HIGH);
    Serial.println("Danger! Gas leak
Detected!");
  } else {
    digitalWrite(2, LOW);
    Serial.println("Environment safe");
  }

  delay(2000);
}
```

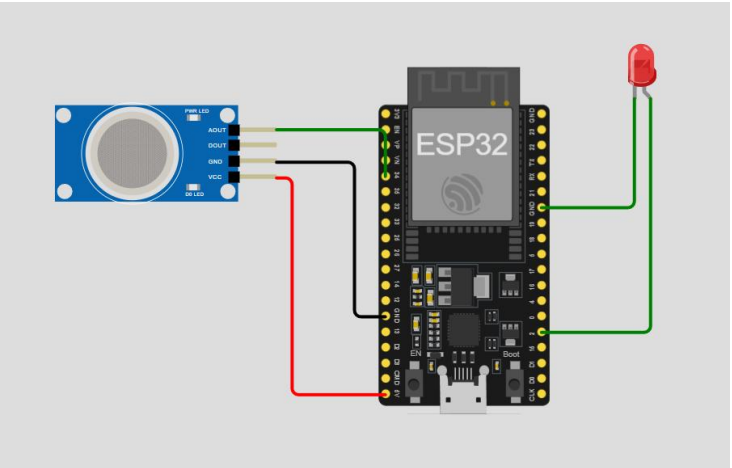

9. SERVOMOTOR
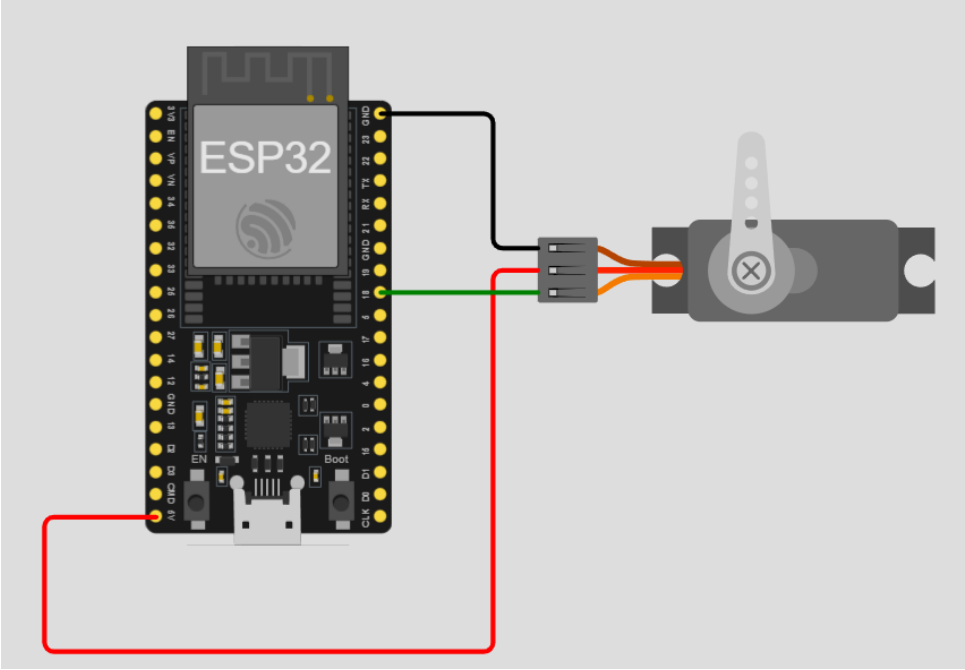
```
#include <ESP32Servo.h>

const int servoPin = 18;
Servo servo;

void setup() {
  servo.attach(servoPin, 500, 2400);
}

int pos = 0;

void loop() {
  for (pos = 0; pos <= 180; pos += 1) {
    servo.write(pos);
    delay(15);
  }

  for (pos = 180; pos >= 0; pos -= 1) {
    servo.write(pos);
    delay(15);
  }
}
```