Signal, Image and Video Processing (2023) 17:4181–4188
https://doi.org/10.1007/s11760-023-02650-8

ORIGINAL PAPER

DIBS: distance- and intensity-based separation filter for high-density impulse noise removal

Piyush Satti[1] · Vaibhav Shrotriya[1] · Bharat Garg[1] · V. B. Surya Prasath[2]

Received: 22 March 2023 / Revised: 14 May 2023 / Accepted: 29 May 2023 / Published online: 14 July 2023
© The Author(s), under exclusive licence to Springer-Verlag London Ltd., part of Springer Nature 2023

Abstract
Noise is an unwanted element that degrades the quality of digital images. Salt and pepper noise is a type of noise that is introduced in one or more steps during image acquisition, enrolment, or transmission. It is therefore important to apply superior restoration methods to mitigate the noise. In this paper, a novel distance- and intensity-based separation filter is proposed wherein the denoised image is obtained by processing subsets of noise-free pixels. The core concept revolves around discarding less relevant information to get a smaller set of relevant pixel values. This filter removes color streaks and distortions that often appear in other filters at high salt and pepper noise. The quantitative comparisons on various standard images reveal that the proposed method outperforms state-of-the-art noise removal filters in terms of overall image detail restoration; achieving better noise removal, especially at higher noise levels. A high-level hardware architecture is also provided.

Keywords Median filters · Mean filters · Salt and pepper noise · Image restoration · Denoising

1 Introduction

Images are highly susceptible to noise in the acquisition and transmission phases; one such type of noise is impulse noise. Impulse noise in images is classified to be of two types: salt and pepper (SAP), and random valued noise (RVN). SAP noise can be described as a sharp disturbance in a signal that results in affected pixels attaining their extreme intensity values. Consequently, a number of linear and nonlinear denoising methods and techniques have been developed. One of the earliest filters used for denoising is the standard median filter (SMF) [1] in which every noisy pixel is replaced with the median of a 3×3 window centered on the corrupted pixel. As the median is directly dependent on the uncorrupted pixel values, the main drawback of this filter is its inefficacy at medium to high noise densities where insufficient information is available.

Subsequently, several filters were introduced that utilized a combination of mean-, median-, and decision-based techniques for noise removal. Adaptive switching weighted median filter (ASWMF) [2] and dynamic adaptive median filter (DAMF) [3] use an adaptive window technique for denoising corrupted pixels. Although these produced improved results at medium noise densities, the main drawback was low pixel correlation in larger window sizes which degraded performance. Subsequently, denoising methods were developed using mathematical models such as weighted mean and probabilistic approaches which claimed better results at high noise densities. Recursive cubic spline interpolation filter (RSIF) [4] is one such approach that recursively uses an interpolation of 3×3 window to evaluate the corrupted pixel values. Being recursive, this technique is susceptible to large processing time so to address this problem a fast switching-based median-mean filter (FSBMMF) [5] was proposed which comprises two stages: detection and filtering. In the detection stage, noisy pixel is identified while in filtering stage each corrupted pixel is replaced by the mean/median of the trimmed window. If no noise-free pixel is present in any of the chosen window sizes, then the corrupted pixel is

✉ Bharat Garg
bharat.garg@thapar.edu

Piyush Satti
psatti_be17@thapar.edu

Vaibhav Shrotriya
vshrotriya_be18@thapar.edu

V. B. Surya Prasath
prasatsa@uc.edu

1 Electronics and Communication Engineering Department, Thapar Institute of Engineering and Technology Patiala, 147001 Patiala, India

2 Department of Pediatrics, University of Cincinnati, Oh, USA

replaced by a previously processed pixel. The previously processed pixel is the output pixel from the previously processed noisy pixel value.

To further reduce computation time, a fast adaptive high-performance filter (FAHPF) [6] was developed which used a three-stage process: overlapping medians, running averages, and 3×3 mean for the denoising process. Recently, an improved fast median algorithm (IAMFA-I and IAMFA-II) [7] was also proposed which replaces the noisy pixel by using a median-based sliding window technique which is a time-efficient algorithm with appreciable results.

Moreover, boundary discriminative noise detector (BDND) [8] is a novel decision-based filter, which uses a large window of size 21×21 for filtering corrupted pixels and consequently requires large processing times with details getting blurred at high noise density. An improved decision-based algorithm (IDBA) [9] was proposed where the noisy pixel is either replaced by median of 3×3 window or by mean of the recently processed pixels in a neighborhood. Further, a robust estimation-based filter (REBF) [10] and modified decision-based unsymmetric trimmed median filter (MDBUTMF) [11] replaces corrupted pixel by mean value of pixel in a fixed size window, however, at high noise densities the median itself is noisy pixel which results in blurring effect. A progressive switching median filter (PSMF) [1] implies a 2-stage process for detection and removal of noise, in 1st stage noisy pixels are detected and then filter is applied progressively in iterative approach. Noise adaptive soft-switching median filter (NASMF) [12] categorizes pixels into four groups where different filtering methods are applied. However, it fails to correctly classify pixels at higher noise densities which results in loss of fine details.

Based on pixel density filter (BPDM) [13], the most repetitive pixel value among the uncorrupted neighboring pixels of the noisy pixel is set as the new value. Min-max average pooling filter (MMAPF) [14] is a deep learning-inspired paper which is effective even at high noise densities, however, lacks texture preservation in detailed images. Adaptive frequency median filter (AFMF) [15], the value of corrupted pixel is calculated using frequency median of neighboring pixels. Noise accumulation and harmonic analysis techniques (NAHAT) [16] filter a harmonic function is used to restore the correct value of corrupted pixel.

Noise density range sensitive (NDRS) filtering algorithm [17], the denoising is performed with the noisy pixel being replaced by mean, median or the pre-processed value based on noise density. The four-stage median (FSMA) filtering algorithm [18] performs median filtering where a small window size, a large window size, the running average, and previously processed pixels are part of the first, second, third, and fourth stages, respectively. The subsequent stages are called only if the denoising fails at the current stage. The adaptive trimmed median (ATM) filter [19] operates well in higher noise densities. This filter restores noisy pixels by using the median of a noise-free adaptive window and an interpolation-based procedure, at low and high noise densities, respectively. Further, an empirical model to identify the corrupted pixel followed by an adaptive filter to denoise is presented in [20]. Further, different AI/ML based denoising techniques are presented [21–23].

Another approach is to use Intensity Bounds to denoise an image, presented in intensity bound limit filter (IBLF) [24]. In this method, a range of possible pixel values is identified based on the corrupted pixel's locality. Subsequently, a probably set is determined by eliminating the unlikely pixels in the identified range. Lastly, an estimation operation is performed to reach a denoised pixel value. Interestingly, image in-painting can also be repurposed to perform denoising operation. Several changes must be made in order to do so and the method is proposed in adaptive radii selection-based image inpainting (ARSI) [25]; it uses a combination of fuzzy logic-based steps and in-painting techniques to achieve appreciable denoising.

In this paper, a distance- and intensity-based separation (DIBS) approach is proposed and a subsequent filter is designed which uses the proposed concept to achieve superior denoised image quality. Major contributions are as follows:

- Introduced the concept of a distance- and intensity-based separation (DIBS) filter for effective removal of high-density impulse noise.
- Proposal of a new algorithm to calculate the output image from the lower and upper bound images.
- Hardware implementation and extensive testing of the proposed filter and comparison with other models from the literature on a variety of natural images and with a range of noise levels.

The rest of the paper is organized as follows. Section 2 presents the proposed framework that introduces a novel denoising algorithm. Section 3 enumerates the simulation results for a variety of natural and standard grayscale and color images. Finally, Sect. 4 concludes the paper.

2 Proposed DIBS filter for impulse noise removal

This section presents the proposed work. It has further been sub-divided into various subsections. Subsection 2.1 details the overall core logic of the proposed distance- and intensity-based separation (DIBS) algorithm; subsection 2.2 explains the distance-based separation (DBS) while subsection 2.3 describes the intensity-based separation (IBS) process. DIBS, DBS, and IBS are as shown in Algorithm 1, 2, and 3, respectively.

Algorithm 1 DIBS(nImg)

1: **Input** nImg ▷ *Input noisy image*
2: **Output** OutImg ▷ *Estimated Image*
3: **for** each $P_{i,j}$ in nImg **do** ▷ *$P_{i,j}$ is any pixel at (i, j)*
4: **if** $P_{i,j} \notin \{0, 255\}$ **then**
5: $OutImg_{i,j} \leftarrow P_{i,j}$
6: **else**
7: $\Omega \leftarrow 3$ ▷ *$\Omega \times \Omega$ is the window size*
8: **loop**
9: $W_c \leftarrow W^{nf}_{\Omega\times\Omega}$
10: $W^u_c \leftarrow unique(W_c)$ ▷ *Discards repeat values*
11: **if** $\Omega > 9$ **then**
12: $OutImg_{i,j} \leftarrow OutImg_{i,j-1}$
13: **else if** $length(W^u_c) = 1$ **then**
14: $OutImg_{i,j} \leftarrow W^u_c$
15: **else if** $length(W^u_c) \geq 2$ **then**
16: $OutImg_{i,j} \leftarrow DBS(W_c)$
17: **else**
18: $\Omega = \Omega + 2$
19: $\mathrm{K} = \begin{bmatrix} 0 & 1 & 0 \\ 1 & 1 & 1 \\ 0 & 1 & 0 \end{bmatrix}$
20: **for** each $P_{i,j}$ in $nImg$ **do**
21: **if** $P_{i,j}$ is noisy **then**
22: $OutImg_{i,j} \leftarrow mean(P^{3\times3}_{i,j} \cdot \mathrm{K})$ ▷ *$P^{3\times3}_{i,j}$ represents 3×3 window drawn around the noisy pixel $P_{i,j}$*

Algorithm 2 DBS(W_c)

1: **for** each $P_{i,j}$ in W_c with co-ordinates (h, k) **do**
2: $D_{h,k} \leftarrow \sqrt{(h-i)^2 + (k-j)^2}$ ▷ *D stores distance from center (i,j) of every pixel*
3: **for** each ele in $D_{h,k}$ **do**
4: **if** $D_{h,k} \leq mode(D_{h,k})$ **then**
5: $D^f_{h,k} \leftarrow D_{h,k}$ ▷ *D^f represents the final matrix*
6: $D^{f,u} \leftarrow unique(D^f)$
7: **if** $length(D^{f,u}) = 1$ **then**
8: $OutImg_{i,j} \leftarrow D^{f,u}$
9: **else if** $length(D^{f,u}) = 2$ **then**
10: $OutImg_{i,j} \leftarrow mean(D^f)$
11: **else**
12: $OutImg_{i,j} \leftarrow IBS(D^f)$

Often in denoising operations, information availability plays a vital role in the performance of any filter. Information availability, in the case of impulse noise, can be directly inferred from the number of noise-free pixels present around any noisy pixel. Information availability decreases drastically as the noise density is increased. In such cases, techniques such as an adaptive window allow more information to be captured around any noisy pixel, albeit, for loss in information quality. This loss in quality can be related to the principle of locality which dictates that pixels located in close proximity to the unprocessed pixel are of higher relevance than pixels located further away. Thus, lack of information in higher noise densities coupled with the loss of relevance of pixel information as one goes further away from the unprocessed pixel reveals a dilemma where researchers have to perform

Algorithm 3 IBS(D^f)

1: $D^{f,s} \leftarrow sort(D^f)$ ▷ *Also converts D^f into a linear array*
2: **for** pixel Y_m in $D^{f,s}$ **do**
3: $I_{dist} \leftarrow Y_m - Y_{m-1}$
4: $P_s \leftarrow IoM(I_{dist})$ ▷ *Point of separation (P_s) is the index where I_{dist} is maximum*
5: $I^l_{dist} \leftarrow I_{dist}[start : P_s]$, $I^u_{dist} \leftarrow I_{dist}[P_s + 1 : end]$
6: **if** $length(I^l_{dist}) > length(I^u_{dist})$ **then**
7: $OutImg_{i,j} \leftarrow median(I^l_{dist})$
8: **else if** $length(I^l_{dist}) < length(I^u_{dist})$ **then**
9: $OutImg_{i,j} \leftarrow median(I^u_{dist})$
10: **else**
11: $OutImg_{i,j} \leftarrow \dfrac{median(I^u_{dist}) + median(I^l_{dist})}{2}$

a trade-off between information availability and information quality.

However, a viable middle-way solution can be proposed. Let us consider the case where the amount of available information is selected generously, in such a scenario information quality is degraded - but this loss in information can be compensated by using an 'information selectivity' function where only the most relevant information is selected. Thus, this counterbalances the degradation in information quality. In essence, carefully selecting the right information will significantly improve results. Alternatively, this can also be understood as having discarded less relevant information.

In the proposed work, the authors have performed 'information selectivity' by using two cascaded functions, namely Euclidean distance- and intensity-based separation. However, selection procedures are reserved only for those scenarios where a generous amount of information is present. In cases where the information is low or becomes very irrelevant, other methods are used to ensure competitive performance.

2.1 Core algorithm

The DIBS core algorithm, as its first step, considers an initial window size of 3×3 which can be written as $\Omega = 3$ as shown in Algorithm 1 Line 7. The window size is increased ($\Omega = \Omega + 2$), Algorithm 1 Line 18, if a set criteria is not met. However, the window size does not indefinitely increase. After some optimal size, it was found that the quality of information from a very large window size would not help in reconstruction of an image. The distance from the center pixel is large and therefore the quality is severely deteriorated. It was also found that using the previously processed pixel value delivers much higher accuracy. The previously processed pixel is the latest processed pixel value in the output (denoised) image. The previously processed pixel is an approximation in itself (of the previous denoising step) and, therefore, not an ideal data point to deduce the current pixel

value. However, the alternative is worse considering the modicum of useful information present in such cases.

Another novel aspect of our proposed DIBS approach is the use of 'unique' values. Unique values of any noise-free window refer to the set of values which do not have any repeating elements. Said unique values of any noise-free window are used to drive decision-making statements. It is interesting to note that the unique values in any window can also be considered to be a selectivity operation in itself. A window with repeating pixel values signifies that the repeating pixels have a higher level of importance than pixels that are repeated lesser number of times. Therefore, the number of occurrences of any pixel is another important piece of information that the 'unique' function discards. The unique function, as shown in Algorithm 1 Line 10 and Algorithm 2 Line 6, selects only the unique values from a noise-free window.

The last operation used is the smoothing operation performed after obtaining the output image. Often, especially in higher noise densities, the denoised pixel values have large errors. This is because of the processing done using poor information, however, using a small kernel the overall quality of the output image can be enhanced, as shown in Algorithm 1 Line 22. This process smooths jagged denoised pixels which are formed due to lack of spatial coherence during processing.

2.2 Distance-based separation

Distance-based separation is another information selection method that is responsible for selection, from a noise-free window, of pixels values which are most significant with relation to the distance from the center pixel. As a preliminary step, the distance of each pixel from the central pixel is calculated and stored in a distance matrix. Next, all those pixel values are collected which were found to be less than or equal to the mode of the distance matrix and are selected for further processing.

Similar to the core step (Subsection 2.1), the unique values of this distance matrix is used in conditional statements to evaluate if there is still information available that can be further discarded. If there are more than two unique values remaining, the IBS algorithm is called which returns the final result.

2.3 Intensity-based separation

Intensity-based separation (IBS) is the last information selection method. It is responsible for selection of a subset of pixel values, from the set of all available pixel values, that is best associate with the expected value of the unprocessed pixel. This process aims to enforce the use of the best fit pixel values. The IBS is carried out in three steps: Initially, the intensity distance is computed for an ordered pixel array. Secondly, the array is split into a lower and an upper set using the pixels between which one encounters the maximum difference. Lastly, depending upon the amount of information available in each of the upper and lower arrays, a median or a mean of medians operation is performed to yield the final value.

Table 1 PSNR (dB) Performance of different Distance Measures with varying Noise Densities

ND(%)	Chessboard	City-Block	Euc	Quasi-Euc
30	35.72	35.93	35.93	35.87
50	32.68	32.86	32.87	32.88
70	30.02	30.16	30.16	30.20
90	26.11	26.16	26.12	26.14

2.4 Alternate distance implementations

According to the proposed algorithm, the mode of the distance may be taken as a distance-based selection measure. With respect to this mechanism, there are several open-ended options. The distance measure itself can be carried out in several ways. Apart from the Euclidean distance used in the algorithm, city-block distance, chessboard distance, and Quasi-Euclidean distance are some that may be natural options. Quasi-Euclidean is a distance measure where the distance between two points is measured as a sum of horizontal, vertical, and diagonal line segments. While the Euclidean distance offers superior quality output, some implementation may not prefer performing a squaring or square root operation, especially considering that the algorithm's performance decays with the increase in noise. An attractive alternative would be city-block distance, where the absolute sum of the coordinates reflects the distance measure. However, this may not be ideal for certain denoising applications where a chessboard distance measure is more suited. Therefore, one may try different methods until a suitable match for a specific application is found. Certainly, Euclidean distance is giving consistent performance for the datasets used in this paper. Overall, as can be seen from Table 1, the results are quite similar.

2.5 Hardware architecture

The generalized architecture of the proposed algorithm is as shown in Fig. 2. It comprises of four modules: the main algorithm (core), distance-based separation procedure (DBS), intensity-based separation procedure (IBS), and the smoothing block. This system requires a memory buffer where the

Table 2 PSNR and SSIM of standard images with noise density (ND) 10% - 90% filtered using proposed and other existing filters

Metrics	ND(%)	ASWMF	BPDM	DAMF	FSBMM	MDBUTMF	RSIF	SMF	SWMF	TVWA	Proposed
PSNR (dB)	10	40.69	23.56	41.34	39.79	33.26	39.29	37.67	34.85	41.27	41.74
	20	36.9	20.27	37.62	35.74	32.52	35.08	33.11	31.57	37.95	38.27
	30	34.47	18.35	35.21	33.13	31.73	32.58	30.25	29.65	35.82	36.12
	40	32.56	16.99	33.3	31.21	30.75	30.81	27.57	28.23	34.09	34.36
	50	30.98	15.89	31.68	29.72	29.25	29.32	24.06	27.18	32.55	32.9
	60	29.54	14.92	30.17	28.44	26.69	27.89	19.38	26.33	31.06	31.56
	70	28.14	13.84	28.62	27.25	23.15	26.44	14.75	25.61	29.46	30.18
	80	26.64	12.45	27	25.68	19.02	24.74	10.74	24.88	27.71	28.53
	90	23.56	10.49	24.8	23.29	14.9	22.3	7.58	23.68	24.63	26.08
	Avg	**31.12**	**17.02**	**33.07**	**31.54**	**24.08**	**30.79**	**22.65**	**29.24**	**32.95**	**33.95**
SSIM	10	0.9846	0.6088	0.9858	0.9832	0.8771	0.9806	0.9788	0.961	0.9864	0.9857
	20	0.9665	0.4436	0.9694	0.9613	0.8708	0.9548	0.9513	0.9202	0.9714	0.9699
	30	0.9453	0.3538	0.9502	0.9343	0.8618	0.9254	0.9181	0.8787	0.9545	0.9529
	40	0.9202	0.2961	0.9277	0.9027	0.8483	0.8941	0.873	0.8379	0.9351	0.9335
	50	0.8908	0.2534	0.9005	0.8678	0.8199	0.8585	0.7812	0.7985	0.9114	0.9113
	60	0.8558	0.2148	0.8668	0.83	0.7441	0.8177	0.5784	0.7613	0.8816	0.8849
	70	0.814	0.1656	0.8232	0.7878	0.5849	0.7689	0.2956	0.7267	0.8426	0.8517
	80	0.7593	0.1038	0.764	0.7317	0.3577	0.7039	0.0982	0.6908	0.7885	0.8042
	90	0.639	0.05	0.671	0.641	0.161	0.603	0.027	0.636	0.677	0.721
	Avg	**0.8118**	**0.3294**	**0.8284**	**0.8121**	**0.5190**	**0.7918**	**0.5029**	**0.7985**	**0.8317**	**0.8534**

The average value of PSNR and SSIM which summarises the overall value are kept in bold faces

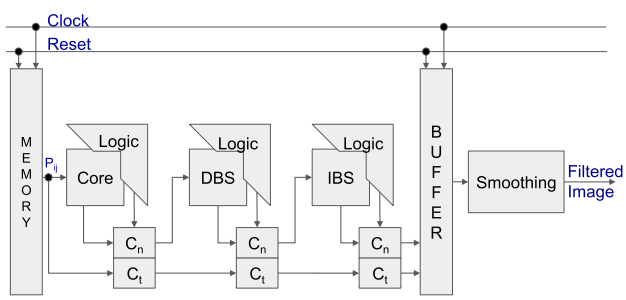

Fig. 1 Hardware architecture of the proposed DIBS framework

image is temporarily stored before proceeding toward the smoothing step. Apart from this, three information bypass modules are also included which have the Perform Next (C_n) and the Pass Through (C_t) modules. These either carry data from the previous process for next batch of operations or allows the pass through of the previously output pixel values directly to the next step. The Core, DBS, and IBS blocks need to be arranged in series because the output of one block is used as the input for the next block if pass through is not achieved. The final smoothing block performs the smoothing operation on a 3×3 window around the noisy pixel using the kernel mentioned in Algorithm 1.

3 Experimental results

This section illustrates the efficiency of the proposed algorithm primarily via quantitative metrics namely peak signal-to-noise ratio (PSNR) and structural similarity index measure (SSIM) [26] obtained by simulation of the proposed work against various state-of-the-art algorithms for Impulse noise removal. Toward that end, a few standard images and the Kodak dataset have been subjected to a wide range of noise densities: 10% to 90%.

3.1 Standard images

Quantitative results are presented in terms of the average PSNR and SSIM values obtained from the denoised images for different standard images subjected to varying impulse noise densities. The standard images are derived from the SIPI image database [27]. The PSNR and SSIM results have been summarized in Table 2. The proposed algorithm showcases significantly improved results for a wide range of noise densities; resulting in a more consistent filter performance. An average improvement of 0.84 dB over existing filters with a peak of 1.28 dB at 90% noise density has been observed. SSIM has also been improved by an average of approximately 2.16%.

Table 3 PSNR and SSIM of KODAK images with noise density 10% - 90% filtered using proposed and other existing filters

Metrics	ND(%)	ASWMF	BPDM	DAMF	FSBMM	MDBUTMF	RSIF	SMF	SWMF	TVWA	Proposed
PSNR (dB)	10	19.26	18.95	27.86	30.29	27.93	29.68	34.67	28.66	31.43	32.39
	20	19.22	16.83	26.94	28.89	27.34	28.16	31.58	26.71	30.15	30.99
	30	19.14	15.47	26.1	27.64	26.68	26.92	29.34	25.33	29.01	29.82
	40	19.04	14.44	25.32	26.43	25.95	25.9	27.14	24.26	27.94	28.7
	50	18.92	13.61	24.52	25.43	25.03	24.98	23.85	23.41	26.91	27.72
	60	18.76	12.87	23.7	24.55	23.53	24.09	19.32	22.69	25.85	26.71
	70	18.57	12.14	22.88	23.72	21.13	23.2	14.67	22.05	24.73	25.68
	80	18.32	11.28	21.96	22.8	17.96	22.19	10.71	21.41	23.45	24.41
	90	17.76	10.1	20.73	21.32	14.44	20.71	7.55	20.44	21.56	22.66
	Avg	**18.51**	**14.53**	**24.3**	**25.81**	**21.19**	**25.2**	**21.11**	**24.55**	**26.5**	**27.53**
SSIM	10	0.6751	0.6245	0.951	0.9531	0.9066	0.949	0.9841	0.9429	0.9731	0.9714
	20	0.665	0.4869	0.9409	0.9394	0.8943	0.9312	0.9661	0.9141	0.9547	0.9584
	30	0.6554	0.4062	0.9288	0.9215	0.8822	0.9107	0.9446	0.8861	0.9366	0.9465
	40	0.6463	0.3501	0.9141	0.9005	0.8683	0.8892	0.9122	0.8588	0.9189	0.9335
	50	0.6372	0.3072	0.8959	0.8774	0.8441	0.8654	0.8242	0.8323	0.9004	0.9176
	60	0.627	0.2657	0.8727	0.8516	0.7847	0.8391	0.61	0.8073	0.8788	0.8984
	70	0.6153	0.2157	0.8426	0.8233	0.6549	0.8083	0.3303	0.7833	0.8514	0.8742
	80	0.5999	0.154	0.8023	0.7864	0.4558	0.7697	0.1427	0.7582	0.8133	0.839
	90	0.555	0.093	0.742	0.725	0.238	0.709	0.049	0.716	0.731	0.777
	Avg	**0.6151**	**0.3587**	**0.8465**	**0.8391**	**0.5723**	**0.829**	**0.5166**	**0.8294**	**0.8520**	**0.8745**

The average value of PSNR and SSIM which summarises the overall value are kept in bold faces

Fig. 2 Benchamark images column-wise (**a**) original, (**b**) Noisy images at 90% noise density, denoised image using (**c**) ASWMF, (**d**) DAMF, (**e**) FSBMMF, (**f**) RSIF, (**g**) SWMF, (**h**) TVWA, and (**i**) Proposed DIBS for various Standard Images

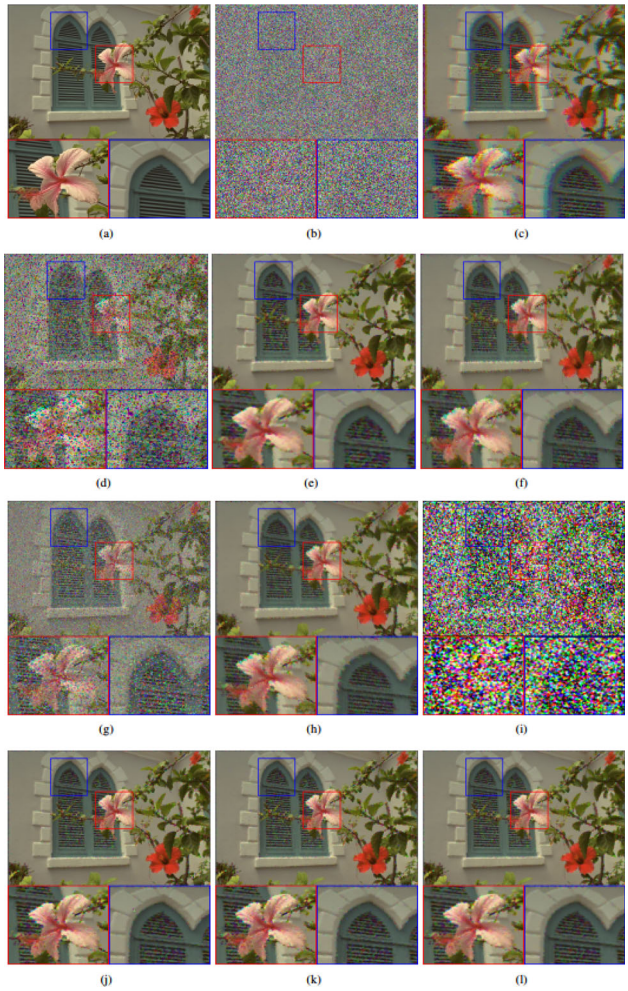

Fig. 3 (**a**) Original image, (**b**) noisy image at 90% ND, and estimated images after using: (**c**) ASWMF (**d**) BPDM, (**e**) DAMF, (**f**) FSBMMF, (**g**) MDBUTM, (**h**) RSIF, (**i**) SMF, and (**j**) SWMF, (**k**) TVWA, and (**l**) Proposed DIBS

In Fig. 1, all the standard images used for comparison are shown from top to bottom for qualitative analysis, with leftmost image being the original image, right to it is the noisy image at 90% Noise density, right to which are the denoised images obtained from algorithms in the given sequence ASWMF, DAMF, FSBMMF, RSIF, SWMF, TVWA and rightmost image being the proposed Algorithm. From Fig. 1, it is evident that ASWMF produces distorted denoised images, DAMF and SWMF fails to preserve the edges, FSBMMF, RSIF and TVWA produces blurred images, while the proposed filter outperforms the existing filters by producing denoised images with preserved edges, no distortion, blurriness and producing superior quality results with texture preservation.

3.2 Kodak image dataset

Quantitative results for denoising of various images of Kodak image dataset subjected to varying noise density have been represented via the average PSNR and SSIM values. Results have been summarized in Table 3. Colored images are processed by slicing the color channels that are individually processed for each color channel and then combining the slices. It can be observed from Table 3 that the proposed algorithm showcases significantly improved results for low to high noise densities with a peak improvement of 1.1 decibel (dB) at 90% noise density, an average improvement of 1.03 dB for PSNR over existing filters has been observed. The efficacy of the proposed algorithm is due to improvised pixel estimation and deduction in blurring at the image edges. From Table 3, we can see that SSIM records average improvement of approximately 2.2% with a peak of 3.5% from existing filters at 90% noise density.

In Fig. 3a represents the original image which is subjected to 90% noise density which is shown in Fig. 3b, the noisy image is filtered using different existing algorithms, (c) ASWMF and (f) FSBMMF produces blurriness in image, (d) BPDM, (g) MDBUTM and (i) SMF fails to recover image, (e) DAMF and (j) SWMF fails to preserve edges, (h) RSIF shows distortion in images, (k) TVWA fails to preserve boundaries and (l) proposed filter produces superior quality results with preserved edges, textures, no distortion and no blurriness as compared to all the known filtering algorithms thus is a better filter than state-of-the-art methods.

4 Conclusion

In this paper, a novel distance- and intensity-based separation (DIBS) filter is proposed for removal of salt and pepper noise in digital grayscale and color images. We studied DIBS filter and demonstrated its information selectivity as an essential step in obtaining improved denoising results compared to other filters from the literature. It was shown that although, larger window sizes contain less relevant information, a selection mechanism can yield a much more suitable set of pixel values on which any suitable transformation or interpolation method may improve performance. Experimental results show that the proposed algorithm provides significantly improved results as compared to established literature for a wide range of noise densities improvements in overall PSNR and SSIM improvements. Thus, our proposed DIBS filter can outperform other salt and pepper denoising filters and a hardware architecture-based implementation makes it a convenient choice for denoising gray and color images. Fur-

ther analysis of the DIBS filter on videos and multispectral images are possible research directions.

Author Contributions The authors declare equal contribution by each authors. Vaibhav and Piyush did the algorithm implementation and well as the simulation while the other two authors were involved in paper writing and concept generation.

Funding This work is supported by Thapar Institute of Engineering Technology (TIET), Patiala, India.

Declarations

Conflicts of interests The authors declare no conflict of interest.

References

1. Wang, Z., Zhang, D.: Progressive switching median filter for the removal of impulse noise from highly corrupted images. IEEE Trans. Circ. Syst. II Analog Dig. Signal Process. **46**(1), 78–80 (1999)
2. Faragallah, O.S., Ibrahem, H.M.: Adaptive switching weighted median filter framework for suppressing salt-and-pepper noise. AEU Int. J. Electron. Commun. **70**(8), 1034–1040 (2016)
3. Patel, P., Majhi, B., Jena, B., Tripathy, C.: Dynamic adaptive median filter (damf) for removal of high density impulse noise. Int. J. Image Graph. Signal Process. **4**(11), 53 (2012)
4. Veerakumar, T., Esakkirajan, S., Vennila, I.: Recursive cubic spline interpolation filter approach for the removal of high density salt-and-pepper noise. Signal Image Video Process. **8**(1), 159–168 (2014)
5. Vijaykumar, V., Mari, G.S., Ebenezer, D.: Fast switching based median-mean filter for high density salt and pepper noise removal. AEU Int. J. Electron. Commun. **68**(12), 1145–1155 (2014)
6. Balasubramanian, G., Chilambuchelvan, A., Vijayan, S., Gowrison, G.: An extremely fast adaptive high-performance filter to remove salt and pepper noise using overlapping medians in images. Imaging Sci. J. **64**(5), 241–252 (2016)
7. Appiah, O., Asante, M., Hayfron-Acquah, J.B.: Improved approximated median filter algorithm for real-time computer vision applications. J. King Saud Univ. Comput. Inf. Sci. **34**(3), 782–792 (2020)
8. Ng, P.-E., Ma, K.-K.: A switching median filter with boundary discriminative noise detection for extremely corrupted images. IEEE Trans. Image Process. **15**(6), 1506–1516 (2006)
9. Nair, M.S., Revathy, K., Tatavarti, R.: Congress on image and signal processing, vol 1. IEEE **2008**, 426–431 (2008)
10. Vijaykumar, V., Vanathi, P., Kanagasabapathy, P., Ebenezer, D.: High density impulse noise removal using robust estimation based filter. IAENG Int. J. Comput. Sci. **35**, 3 (2008)
11. Esakkirajan, S., Veerakumar, T., Subramanyam, A.N., PremChand, C.: Removal of high density salt and pepper noise through modified decision based unsymmetric trimmed median filter. IEEE Signal Process. Lett. **18**(5), 287–290 (2011)
12. Eng, H.-L., Ma, K.-K.: Noise adaptive soft-switching median filter. IEEE Trans. Image Process. **10**(2), 242–251 (2001)
13. Erkan, U., GöKREM, L.: A new method based on pixel density in salt and pepper noise removal. Turk. J. Electr. Eng. Comput. Sci. **26**(1), 162–171 (2018)
14. Satti, P., Sharma, N., Garg, B.: Min-max average pooling based filter for impulse noise removal. IEEE Signal Process. Lett. **27**, 1475–1479 (2020)
15. Erkan, U., Enginoğlu, S., Thanh, D.N., et al.: Adaptive frequency median filter for the salt and pepper denoising problem. IET Image Process. **14**(7), 1291–1302 (2019)
16. Thanh, D.N., Prasath, V.S., Phung, T.K., Hung, N.Q.: Impulse denoising based on noise accumulation and harmonic analysis techniques. Optik **241**, 166163 (2020)
17. P. J. S. Sohi, N. Sharma, B. Garg, and K. Arya (eds) Noise density range sensitive mean-median filter for impulse noise removal In: Innovations in Computational Intelligence and Computer Vision. Springer, pp. 150–162 (2020)
18. Garg, B., Arya, K.: Four stage median-average filter for healing high density salt and pepper noise corrupted images. Multimed. Tools Appl. **79**(43), 305–329 (2020)
19. Garg, B.: Restoration of highly salt-and-pepper-noise-corrupted images using novel adaptive trimmed median filter. Signal Image Video Process. **14**(8), 1555–1563 (2020)
20. Veerakumar, T., Subudhi, B.N., Esakkirajan, S.: Empirical mode decomposition and adaptive bilateral filter approach for impulse noise removal. Exp. Syst. Appl. **121**, 18–27 (2019)
21. Chen, J., Li, F.: Denoising convolutional neural network with mask for salt and pepper noise. IET Image Process. **13**(13), 2604–2613 (2019)
22. Thanh, D.N.H., Hien, N.N., Prasath, S., et al.: Adaptive total variation l1 regularization for salt and pepper image denoising. Optik **208**, 163677 (2020)
23. Kumar, S.V., Nagaraju, C.: Support vector neural network based fuzzy hybrid filter for impulse noise identification and removal from gray-scale image. J. King. Saud. Uni. Comput. Inf. Sci. **33**(7), 820–835 (2018)
24. Satti, P., Shrotriya, V., Garg, B., Thanh, D.N.: Intensity bound limit filter for high density impulse noise removal. J. Ambient Intell. Hum. Comput. **5**, 1–23 (2022)
25. Mukhopadhyay, R., Gupta, P., Satti, P., Garg, B.: Adaptive radii selection based inpainting method for impulse noise removal. Multimed. Tools Appl. **5**, 1–20 (2023)
26. Wang, Z., Bovik, A.C., Sheikh, H.R., Simoncelli, E.P.: Image quality assessment: from error visibility to structural similarity. IEEE Trans. Image Process. **13**(4), 600–612 (2004)
27. Usc-sipi image database website. [Online]. Available: https://sipi.usc.edu/database/database.php?volume=misc&image=13#top

Publisher's Note Springer Nature remains neutral with regard to jurisdictional claims in published maps and institutional affiliations.

Springer Nature or its licensor (e.g. a society or other partner) holds exclusive rights to this article under a publishing agreement with the author(s) or other rightsholder(s); author self-archiving of the accepted manuscript version of this article is solely governed by the terms of such publishing agreement and applicable law.