VARDHAMAN
COLLEGE OF ENGINEERING

A Course End Project Report on

SMART IRRIGATION SYSTEM USINGARDUINO

A8603- Internet of Things Laboratory

Submitted by
Afiya Fatima
24881A05Y3
Akshith Ikurthy
24881A05Y4
Amgothu Prashanth
24881A05Y5

Course Facilitator

Guruku Mamatha
Assistant Professor

Department of Computer Science and Engineering

Vardhaman College of Engineering, Hyderabad

Autonomous Institute, Affiliated to **JNTUH,**
Approved by **AICTE,** Accredited by **NAAC** with **A**++ Grade
Kacharam, Shamshabad, Hyderabad- 501 218, Telangana,
India.

DEPARTMENT OF COMPUTER SCIENCE AND ENGINEERING

This is to certify that the Course End Project titled **"Smart Irrigation System using Arduino"** is carried out by **Afiya Fatima, Akshith Ikkurthy** and **Amgothu Prashanth** with Roll Numbers **24881A05Y3, 24881A05Y4 and 24881A05Y5** towards **A8603 – Internet of Things Laboratory** course in partial fulfilment of the requirements for the award of degree of **Bachelor of Technology** in **Computer Science and Engineering** during the Academic year 2025-26.

Signature of the Course Faculty
Guruku Mamatha
Assistant Professor,CSE.

Signature of the HoD
Dr. S V Vasantha
HoD,CSE.

Contents

1 Introduction 1
2 Literature Review 2
3 Objectives 3
4 Methodology 4-6
4.1 Architectural Diagram 4
4.2 Hardwareand Software Requirements 5
4.3 Working Principle 5
4.4 Software Implementation 6
5 Results and Discussion 8-9
6 Mapping POs and SDGs 10-11
6.1 Program Outcomes (POs) Mapping 10
6.2 Sustainable Development Goals (SDGs) Mapping 11
7 Conclusion 12
Bibliography 13

ABSTRACT

A smart plant watering system is an automated irrigation solution designed to maintain optimal soil moisture levels for healthy plant growth. Proper watering is one of the most critical factors in plant care, yet manual watering methods are often inconsistent and inefficient. Overwatering can lead to root damage and fungal growth, while underwatering can cause plants to dry out and die. Hence, an intelligent system that can monitor soil conditions and supply water only when necessary is highly essential.

This project uses components such as the Arduino UNO board, soil moisture sensor, relay module, and water pump to develop an automated watering system. The soil moisture sensor continuously measures the water content in the soil and sends real-time data to the Arduino UNO. Based on this data, the Arduino determines whether the soil is dry or sufficiently moist. If the soil is dry, the Arduino activates the water pump through a relay module, ensuring timely irrigation.

The system is implemented on a breadboard using jumper wires, which makes it easy to assemble and modify without soldering. A USB cable powers the Arduino and allows easy programming through the Arduino IDE. The overall system is cost-effective, user-friendly, and suitable for small-scale applications such as home gardens and indoor plants.
The main objective of this project is to develop a reliable, efficient, and low-cost automated irrigation system that minimizes human effort, conserves water, and ensures proper plant care through real-time monitoring and control.

Keywords: Smart Irrigation System, Soil Moisture Sensor, Arduino UNO, Automated Watering, Relay Module, Water Pump Control, Real-Time Monitoring, Embedded Systems, Water Conservation, Precision Agriculture, Sustainable Farming,.

1 Introduction

Water is a fundamental requirement for plant growth and survival. However, maintaining the right level of soil moisture manually can be difficult due to varying environmental conditions such as temperature, humidity, and soil type. Traditional watering methods often depend on human judgment, which may not always be accurate. This can result in either excessive watering or insufficient watering, both of which negatively impact plant health.

A smart plant watering system provides an efficient solution to this problem by automating the irrigation process. This system continuously monitors soil moisture levels using a soil moisture sensor and ensures that plants receive the required amount of water at the right time. By eliminating manual intervention, the system improves efficiency and reduces water wastage.

In this project, the Arduino UNO board acts as the central controller, while the soil moisture sensor acts as the input device. The sensor detects the moisture level in the soil and sends analog signals to the Arduino. The Arduino processes this data and compares it with a predefined threshold value. If the moisture level is below the threshold, the system activates a water pump through a relay module to supply water.

The system is designed using simple hardware components such as a breadboard, jumper wires, and a USB power supply, making it easy to construct and modify. This project demonstrates how embedded systems and sensor technology can be used to develop smart agricultural solutions that are both efficient and sustainable.

2 Literature Review

In earlier times, irrigation systems were primarily manual and required constant human involvement. Farmers and gardeners had to rely on experience and observation to determine when to water plants. These traditional methods were not only time-consuming but also inefficient, often leading to over-irrigation or under-irrigation.

With the development of embedded systems and sensor technologies, modern irrigation systems have become more advanced and efficient. Microcontrollers such as Arduino UNO have made it possible to automate irrigation processes by integrating sensors and actuators. Soil moisture sensors play a key role in these systems, as they provide accurate real-time data about soil conditions.

Recent smart irrigation systems use sensors, microcontrollers, and automation techniques to optimize water usage. Some advanced systems even incorporate IoT technology, allowing users to monitor and control irrigation remotely using mobile applications. These systems improve water efficiency, reduce labor, and enhance crop productivity.

This project is based on these modern approaches and focuses on creating a simple, low-cost smart watering system using Arduino UNO and a soil moisture sensor. The system provides real-time monitoring and automatic control, making it suitable for small-scale applications while maintaining efficiency and reliability.

3 Objectives

- **To detect soil moisture levels accurately:**

To monitor the moisture content in the soil, a soil moisture sensor was used in this system. It was observed that the sensor effectively measures the water content by detecting the electrical conductivity of the soil. The readings obtained were consistent and reliable for different moisture conditions, making the system suitable for automated irrigation applications. This demonstrates that soil moisture sensing is a practical and efficient method for real-time monitoring of plant water requirements.

- **To activate the water pump at a critical moisture level:**

To ensure proper watering of plants, a threshold-based mechanism was implemented in which the water pump is activated when the soil moisture level falls below a predefined value. It was observed that the system responds accurately to this condition, turning the pump ON only when the soil becomes dry. This prevents both overwatering and underwatering, thereby improving plant health and conserving water resources.

- **To achieve real-time system performance:**

To maintain continuous monitoring and immediate response, the system was designed to operate in a real-time loop. It was observed that the microcontroller processes the sensor input efficiently and controls the water pump without noticeable delay. The system responds instantly to changes in soil moisture levels, demonstrating the reliability and effectiveness of embedded systems in real-time agricultural applications.

4 Methodology

4.1 Architectural Diagram

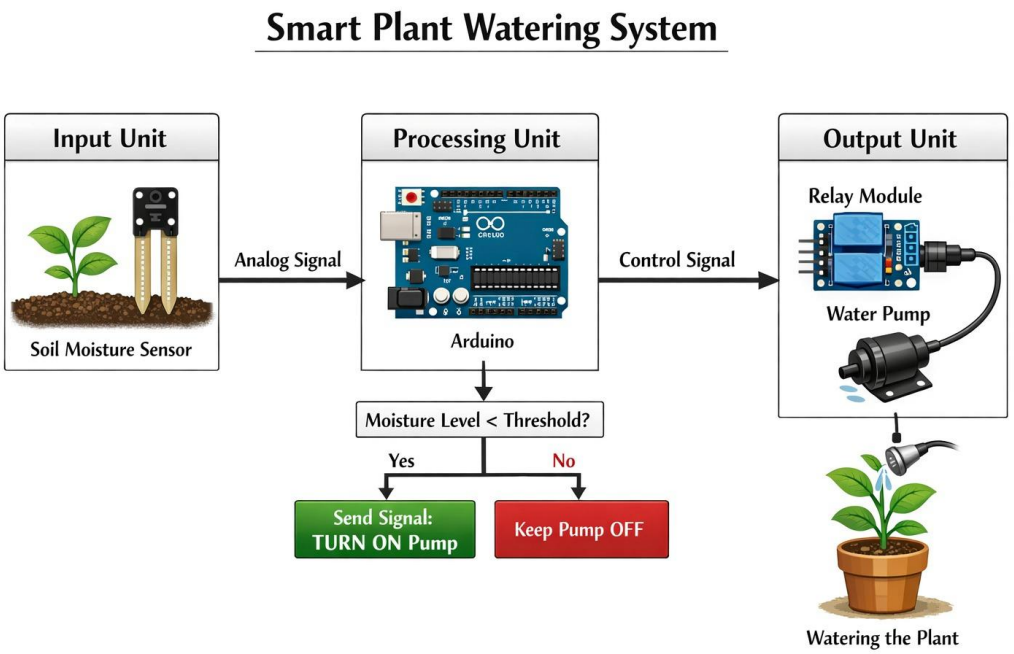

Figure 1: Architectural Diagram

The architectural diagram represents the overall structure and flow of the smart plant watering system. It consists of three main components: the soil moisture sensor (input unit), the Arduino microcontroller (processing unit), and the relay module with water pump (output unit). The soil moisture sensor continuously monitors the moisture content in the soil and sends analog signals based on the detected moisture levels. This information is transmitted to the Arduino in the form of electrical signals.

The Arduino acts as the central processing unit of the system. It reads the moisture values from the sensor and compares them with a predefined threshold value. The arrows in the diagram indicate the direction of data flow from the sensor to the microcontroller and then to the output device.

Based on the comparison, the Arduino sends control signals to the relay module, which in turn controls the water pump. If the soil moisture level is below the threshold value, the relay is activated, and the water pump is turned ON to supply water to the plant. If the moisture level is above the threshold, the pump remains OFF. This architecture ensures a simple, efficient, and real-time automated irrigation system for maintaining optimal soil moisture levels.

4.2 Hardware and Software Requirements

Hardware:

• Arduino UNO

• Soil Moisture Sensor (for detecting soil moisture levels)

• Relay Module (to control the water pump)

• Water Pump (for supplying water to plants)

• Breadboard

• Jumper Wires (Male to Male)

• USB Cable (for programming and power supply)

Software:

• Arduino IDE

• Embedded C/C++ Programming Language

4.3 Working Principle

The working principle of the smart plant watering system is based on real-time monitoring and automated control.

Initially, the soil moisture sensor is placed in the soil near the plant roots. It continuously measures the moisture level and converts it into an electrical signal. This signal is sent to the Arduino UNO for processing.

When the soil is sufficiently moist, the sensor sends a lower value signal. The Arduino recognizes this condition and keeps the water pump in the OFF state. In this situation, no water is supplied, preventing overwatering.

When the soil becomes dry, the sensor detects a decrease in moisture and sends a higher value signal to the Arduino. Once the value crosses the predefined threshold, the Arduino activates the relay module, which turns ON the water pump. The pump supplies water to the plant until the moisture level returns to normal.

4.4 Software Implementation

SOURCE CODE:

```
 int sensorPin = A0;
int relayPin = 6;
int moistureValue =
0;
int threshold = 900;
void setup() {
  Serial.begin(9600);
  pinMode(relayPin,
OUTPUT);

digitalWrite(relayPin
, HIGH); // Relay
OFF (depends on
module)
}
void loop() {
  moistureValue =
analogRead(sensorPi
n);

Serial.print("Moistur
e: ");
Serial.println(moistu
reValue);
  if (moistureValue >
threshold) {

digitalWrite(relayPin
, LOW);
```

```
Serial.println("Pump
ON");
  } else {

digitalWrite(relayPin
, HIGH);

Serial.println("Pump
OFF");
  }
  delay(2000);
}
```

5 Results and Discussions

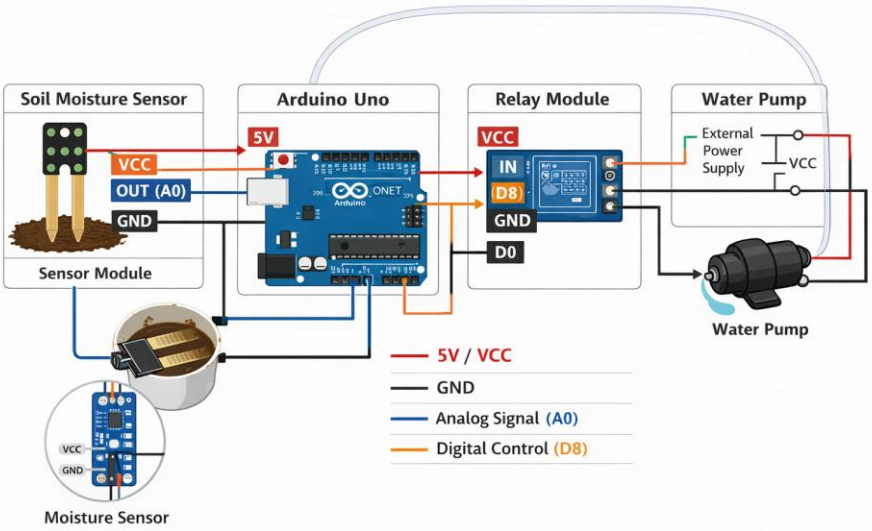

Figure 2: Connections of the Arduino Uno.

Summary of Result

The developed smart plant watering system successfully demonstrated the ability to monitor soil moisture using a soil moisture sensor and provide automatic irrigation based on the moisture level. The system continuously measured the moisture content of the soil and responded accurately according to the programmed condition. When the soil moisture level dropped below the predefined threshold, the water pump was activated through the relay module, supplying water to the plant. When the moisture level was above the threshold, the pump remained OFF. The system showed consistent performance in detecting soil conditions and operated effectively in real-time, ensuring proper watering of plants.

Interpretation

The results indicate that the soil moisture sensor is reliable for detecting variations in soil moisture and can be effectively integrated with a microcontroller for automated irrigation systems. The threshold-based control mechanism ensures that watering occurs only when required, reducing water wastage and improving efficiency. The activation of the water pump during dry conditions highlights the system's ability to provide immediate response, which is essential for maintaining plant health. Overall, the system behavior closely matches the expected output defined in the program and demonstrates accurate and efficient performance.

Achievement of Objectives

The objectives of the project were successfully achieved. The system was able to detect soil moisture levels accurately and automate the watering process using a soil moisture sensor and Arduino UNO. The implementation of a threshold-based control system using a relay module and water pump was completed as planned. The activation of the pump when the soil became dry was achieved exactly as defined in the code. Additionally, the project demonstrated real-time functioning of an embedded system and provided a simple, cost-effective solution suitable for both academic and practical applications.

Implications

The project has important implications in the field of agriculture and smart irrigation systems. It demonstrates how simple and low-cost components can be used to develop efficient and automated solutions for plant care. The system can be further extended for use in large-scale agriculture, greenhouses, and smart gardening systems. It also provides a strong foundation for developing advanced systems with features such as IoT-based remote monitoring, weather-based irrigation control, and data logging. From an educational perspective, the project enhances understanding of sensor technology, automation, and real-time embedded systems.

6 Mapping POs and SDGs

6.1 Program Outcomes (POs) Mapping

Table 1: Mapping of Program Outcomes (POs) to Project Relevance

PO No.	Program Outcome	Relevance
PO1	Engineering Knowledge	Applied fundamental concepts of embedded systems, soil moisture sensing, and basic electronics to design and implement a smart plant watering system.
PO2	Problem Analysis	Identified the real-world problem of inefficient manual irrigation and analyzed suitable sensor-based solutions using soil moisture detection.
PO3	Design/Development of Solutions	Designed and developed a functional system using Arduino, soil moisture sensor, relay module, and water pump to automate watering based on moisture levels.
PO5	Engineering Tool Usage	Utilized modern tools such as Arduino IDE for programming and debugging, along with hardware components for real-time implementation
PO8	Individual and Team Work	Worked systematically to design, assemble, and test the system, documenting observations and improving the project through iterative testing.
PO9	Communication	Presented the working model and explained the system design, coding logic, and results effectively through reports and

6.2 Sustainable Development Goals (SDGs) Mapping

Table 2: Mapping of Sustainable Development Goals (SDGs) to Project Relevance

SDG No.	Goal	Relevance
SDG 2	Zero Hunger	Supports sustainable agriculture by enabling efficient irrigation practices, improving plant growth, and helping increase crop productivity through proper water management.
SDG 6	Clean Water and Sanitation	Promotes efficient use of water resources by supplying water only when required, thereby reducing wastage and encouraging responsible water management practices. .
SDG 11	Sustainable Cities and Communities	Supports sustainable urban gardening and green environments by enabling efficient plant care systems in homes and communities.

7 Conclusion

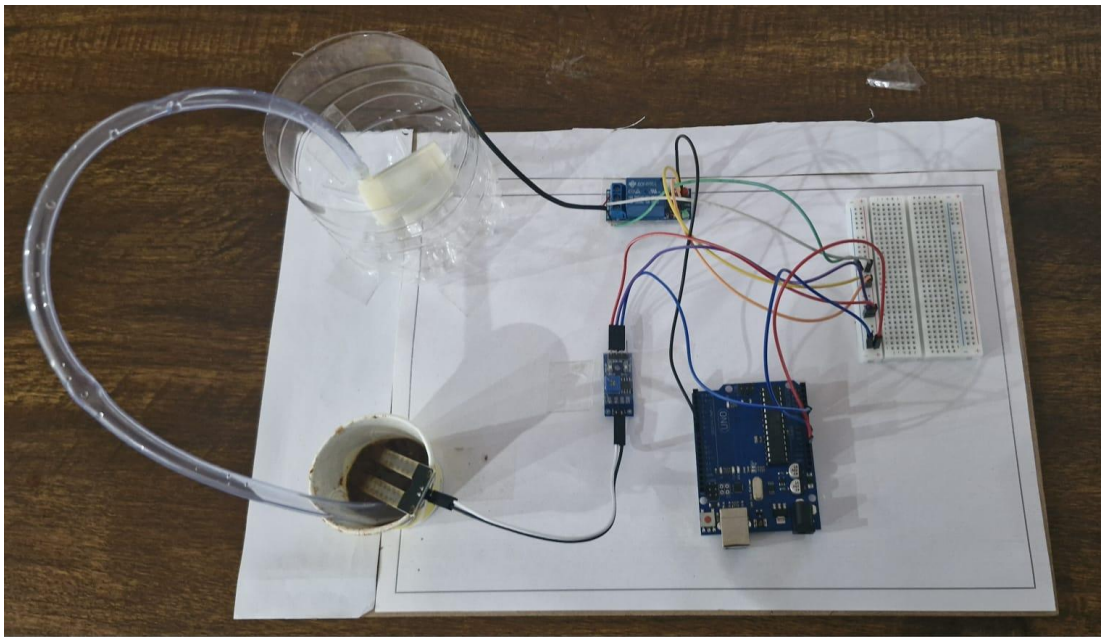

The smart plant watering system developed in this project provides an effective and automated solution for maintaining proper soil moisture levels. By using a soil moisture sensor and Arduino UNO, the system ensures that plants are watered only when necessary, improving plant health and reducing water wastage.

The system is simple, cost-effective, and easy to implement, making it suitable for both beginners and practical applications. It eliminates the need for manual watering and ensures consistent care for plants, even in the absence of the user.

Furthermore, this project highlights the importance of integrating technology with agriculture to achieve sustainable development. By automating irrigation, the system contributes to water conservation and efficient resource utilization.

In the future, the system can be enhanced by integrating IoT features such as mobile notifications, remote control, weather prediction, and data logging. These improvements can further increase the efficiency and usability of the system, making it suitable for large-scale agricultural applications.

Bibliography

[1] Arduino, Arduino Official Documentation, Available: https://www.arduino.cc

[2] Soil Moisture Sensor, Capacitive Soil Moisture Sensor Datasheet, Available: https://www.electronicshub.org

[3] Raj Kamal, Embedded Systems: Architecture, Programming and Design, McGraw Hill Education, 2017

[4] Arshdeep Bahga and Vijay Madisetti, Internet of Things: A Hands-On Approach, Universities Press, 2015

[5] Thomas L. Floyd, Electronic Devices, Pearson Education, 2018

[6] Muhammad Ali Mazidi, The 8051 Microcontroller and Embedded Systems, Pearson, 2016

[7] K. Ogata, Modern Control Engineering, Prentice Hall, 2010

[8] S. M. Sze, Semiconductor Devices: Physics and Technology, Wiley, 2012

[9] IEEE Xplore, Smart Irrigation Systems Using Soil Moisture Sensors, Available: https://ieeexplore.ieee.org

[10] National Instruments, Introduction to Sensors and Transducers, Available: https://www.ni.com

[11] SparkFun Electronics, Soil Moisture Sensor Hookup Guide, Available: https://www.sparkfun.com

[12] Make: Magazine, Arduino Projects Handbook, Maker Media, 2019