A Novel and Robust Authentication Protocol for Secure Underwater Communication Systems

Chiramdasu Rupa, *Senior Member, IEEE*, Gondela Sai Varshitha, Durgempudi Divya, Thippa Reddy Gadekallu, *Senior Member, IEEE*, and Gautam Srivastava, *Senior Member, IEEE*

***Abstract*—Underwater communication (UWC) systems are vital for applications, such as environmental monitoring, military surveillance, and offshore exploration. However, existing authentication protocols for underwater networks are often inefficient, vulnerable to replay and impersonation attacks, and lack resilience to node failures, a gap not fully addressed by current standards. The proposed study presents the design and implementation of a novel authentication protocol tailored for UWC systems. The approach leverages pentatope elliptic curve cryptography for efficient key generation and secure data exchange, ensuring robust protection against common cyber threats. Formal security analysis using BAN logic and the Scyther tool verifies resistance to replay, impersonation, and eavesdropping attacks, with no successful attacks detected in over 60 test cases. The resulting design demonstrates significant improvements in computational efficiency and resilience to adversarial attacks, ensuring scalable and reliable UWCs. Thus, it represents a critical advancement in securing underwater networks, paving the way for practical deployment in mission-critical applications. The proposed protocol reduces total communication overhead to 2112 bits (a 30%–34% reduction) and lowers computational cost to 0.4 ms per entity, significantly improving efficiency compared to existing schemes. Furthermore, the protocol incorporates fallback authentication peers to ensure resilience under partial node outages.**

***Index Terms*—Authentication protocol, computational efficiency, cyber threats, pentatope elliptic curve, Scyther, underwater communication (UWC).**

I. Introduction

UNDERWATER communication (UWC) systems are vital for diverse maritime applications, including underwater monitoring, oceanographic research, oil and gas exploration, and defence operations [1]. These systems primarily rely on underwater wireless communication networks (UWCNs), comprising sensors and autonomous underwater vehicles (AUVs). The coordination and information exchange between these entities are integral to achieving operational goals [2]. However, the aquatic environment imposes unique challenges, such as high bit error rates, low bandwidth, and large propagation delays, making reliable and secure communication particularly difficult. Given these challenges, robust authentication protocols become essential to ensure secure and reliable data exchange in UWC systems [3]. Authentication protocols not only validate the entities involved but also safeguard communication against threats like eavesdropping, replay attacks, and spoofing [4]. Existing authentication protocols often fall short in addressing the specific constraints of underwater networks, necessitating the development of specialized solutions tailored to this domain [5]. To address desynchronization in underwater environments, our implementation integrates adaptive timestamp windows and periodic satellite-based synchronization, enhancing Kerberos' applicability in latency-prone underwater acoustic networks (UANs). To address these limitations, this study proposes an authentication protocol based on the Kerberos framework. Kerberos is a time-tested authentication protocol that employs secret keys, ticket-granting mechanisms, and timestamps for secure entity validation. Its lightweight nature and efficient key distribution make it well-suited for the resource-constrained underwater environment [6]. By integrating Kerberos into UWC systems, this study aims to enhance security, reduce computational overhead, and ensure seamless data exchange [7]. The increasing vulnerability of UWC systems to attacks due to their dynamic topology, constrained resources, and unique environmental challenges. The proposed objectives include designing and implementing the Kerberos-based authentication protocol, analyzing its security using the Scyther tool, and validating its efficiency and scalability in UWC scenarios. This effort contributes to advancing secure and reliable UWC systems [8].

A. Motivation

UWC systems face critical challenges like high latency, node mobility, and limited bandwidth, making them vulnerable to cyber threats. Real-world incidents, such as a 400% rise in maritime cyberattacks over the last decade and wormhole disruptions in 30% of simulated networks, underscore these risks [9]. Despite the existence of standardized authentication protocols, most fail to address the unique constraints of

Received 24 July 2025; accepted 18 August 2025. Date of publication 22 August 2025; date of current version 7 November 2025. *(Corresponding authors: Thippa Reddy Gadekallu; Gautam Srivastava.)*

Chiramdasu Rupa, Gondela Sai Varshitha, and Durgempudi Divya are with the Department of CSE, Siddhartha Academy of Higher Education Deemed to be University, VR Siddhartha Engineering College (A), Vijayawada 520007, India (e-mail: rupamtech@gmail.com; saivarshithagondela4126@gmail.com; durgempudidivya1508@gmail.com).

Thippa Reddy Gadekallu is with the College of Mathematics and Computer Science, Zhejiang, A&F University, Hangzhou 311300, China, and also with the Division of Research and Development, Lovely Professional University, Phagwara 144411, India (e-mail: thippareddy@ieee.org).

Gautam Srivastava is with the Department of Math and Computer Science, Brandon University, Brandon, MB R7A 6A9, Canada, and also with the Research Centre for Interneural Computing, China Medical University, Taichung 40402, Taiwan (e-mail: srivastavag@brandonu.ca).

Digital Object Identifier 10.1109/JIOT.2025.3601984

2327-4662 © 2025 IEEE. All rights reserved, including rights for text and data mining, and training of artificial intelligence and similar technologies. Personal use is permitted, but republication/redistribution requires IEEE permission.
See https://www.ieee.org/publications/rights/index.html for more information.
Authorized licensed use limited to: INDIAN INST OF INFO TECH AND MANAGEMENT. Downloaded on February 15,2026 at 13:05:22 UTC from IEEE Xplore. Restrictions apply.

underwater environments: they either incur excessive computational overhead, lack resilience to node failures, or are vulnerable to advanced adversarial tactics, such as delay injection and Sybil attacks. The financial loss of over 1 00 000 per failed AUV mission further emphasizes the need for a protocol that is not only secure but also efficient and resilient to partial network outages [10]. Our solution directly addresses these gaps by introducing lightweight cryptographic operations, adaptive timestamp validation, and dynamic fallback authentication—features absent in prior art.

B. Applicable Scenarios

The proposed protocol is designed for mission-critical underwater operations, such as offshore oil and gas exploration, military surveillance, and real-time environmental monitoring, where secure, reliable, and fault-tolerant communication is paramount. These scenarios often involve heterogeneous networks of static sensors, mobile AUVs, submarines (SUBs), buoys, and satellites (SAT)—interconnected in dynamically changing topologies with sporadic node availability. Existing protocols, optimized for stable, well-connected environments, are ill-suited to these challenges. Our solution is explicitly validated for such use cases, supporting redundancy through backup communication links, adaptive timestamp validation for varying propagation delays, and rapid reauthentication in response to node mobility or failure.

C. Research Contributions

The significant research contributions of this study are as follows.

1) Development of a novel pentatope-based elliptic curve cryptosystem that reduces the number of global parameters and enhances resistance to discrete logarithm attacks, while maintaining low computational overhead.
2) Design of a mutual authentication protocol that enforces hop-wise freshness validation using nonces and timestamps, mitigating replay attacks even in high-latency environments.
3) Integration of dynamic fallback authentication peers to ensure continuous secure communication during partial network outages—a feature absent in prior protocols.
4) Formal security validation using BAN logic and the Scyther tool, with comprehensive testing against replay, impersonation, and eavesdropping attacks.
5) Demonstration of substantial improvements in communication and computational efficiency, with a 30%–34% reduction in communication overhead and sub-millisecond authentication latency, validated through both simulation and energy analysis.
6) A hierarchical, scalable key management and revocation framework that minimizes storage overhead on constrained nodes while supporting large-scale deployments.

D. Roadmap of the Article

Section II describes the related work of the existing authentication protocols. Section III gives a gist of the preliminaries required for familiarizing with the cryptographic algorithms used, along with the network model. Section IV explains the proposed authentication protocol. Section V discusses security analysis of the proposed scheme. Section VI shows the performance evaluation, including computational and communication costs. Concluding remarks on this work are given in Section VII.

II. Related Work

Ahmed et al. [2] proposed securing underwater wireless sensor networks (UWSNs) by analyzing threats and proposing countermeasures using cryptographic methods and blockchain technology. Key challenges include limited resources like battery life and processing power, making computationally intensive protocols less viable. Traditional methods like RSA are inefficient due to high complexity and data overhead. The study highlights gaps in handling attacks like wormholes and jamming and suggests improvements to address these issues.

Tomović et al. [11] proposed a blockchain-assisted key management protocol for underwater acoustic sensor networks (UASNs) to enhance security and reduce authentication delays. The protocol uses lightweight elliptic curve Qu-Vanstone (ECQV) implicit certificates and the hashed one-pass Menezes-Qu-Vanstone (HOMQV) protocol for efficient key exchange, addressing resource constraints. Blockchain technology, hosted on surface nodes, provides decentralized certificate management and automates trust scoring via smart contracts. Comparative analysis and validation using the AVISPA tool demonstrate its robustness and lower computational overhead.

Vasudeva and Sood [12] conducted a detailed survey on effective techniques to counter Sybil attacks in ad-hoc networks. These techniques include random key predistribution, centralized symmetric key sharing, RSSI-based detection, neighbourhood data analysis, passive detection of Sybil identities (with and without groups), and energy trust systems. The study evaluates these approaches by outlining their advantages and limitations, complemented by diagrams and examples to illustrate Sybil defence mechanisms. Additionally, the authors discuss challenges and propose future research directions to enhance the mitigation of Sybil attacks.

Zukarnain et al. [13] proposed Sybil attack countermeasures in underwater sensor and acoustic networks, focusing on prevention, detection, and mitigation techniques. Key approaches include cluster-based architectures, energy management strategies, trust-based frameworks, and time-reversal mechanisms. The protocols emphasize secure routing, node status validation, and cross-layer solutions. Drawbacks include challenges in addressing node mobility, energy constraints, and the absence of practical assumptions in many methods.

Khalid et al. [14] proposed secure energy efficient and cooperative routing (SEECR), a protocol for secure and efficient routing in UWSNs. SEECR incorporates cooperative routing and a built-in defence mechanism to counter active attacks while ensuring minimal computational overhead. It outperforms the AMCTD protocol in node survival, transmission loss, energy efficiency, and end-to-end delay, though

Authorized licensed use limited to: INDIAN INST OF INFO TECH AND MANAGEMENT. Downloaded on February 15,2026 at 13:05:22 UTC from IEEE Xplore. Restrictions apply.

TABLE I
SUMMARY OF RELATED WORK

Author	Device Type	Security Measures	Cryptographic Elements	Security Analysis Methods	Application
Ahmed et al. [2]	UWSNs	Threat analysis, countermeasures	Blockchain, cryptographic methods	Gaps in attack handling (wormholes, jamming)	Enhancing UWSN security
Tomović et al. [11]	UASNs	Blockchain-assisted key management	ECQV implicit certificates, HOMQV protocol	AVISPA tool validation	Authentication, trust automation
Vasudeva et al. [12]	Ad-hoc networks	Sybil attack mitigation	Centralized symmetric keys, energy trust systems	Diagrams, comparative evaluations	Countering Sybil attacks
Ahmad et al. [13]	UWSNs, acoustic networks	Prevention, detection, mitigation techniques	Trust-based frameworks, cluster-based architectures	Secure routing, cross-layer solutions	Sybil attack countermeasure
Saeed et al. [14]	UWSNs	SEECR protocol	Cooperative routing	Comparison with AMCTD	Secure, efficient routing
Peng et al. [15]	UASNs	Modified AES-128 encryption	Alternate S-Box method	Simulation comparison	Secure, energy-efficient communication
Shi et al. [16]	UANs	Lightweight security framework	Elliptic curve, hash algorithms	Quantum resistance simulations	Addressing quantum threats
Diamant et al. [17]	UWANs	Physical-layer security scheme	Secret key generation	Simulations, field tests	Secure communication

challenges remain in addressing broader routing attacks and improving energy utilization.

Peng et al. [15] proposed a modified AES-128 encryption algorithm for UASNs, aimed at improving security and energy efficiency. This approach modifies the traditional AES-128 by using an alternate method instead of the S-Box, ensuring resistance against brute-force and other attacks. Simulation results demonstrated its superiority over AES-128, Blowfish, and PRESENT in terms of security and energy efficiency. However, the approach may introduce additional computational complexity. This could lead to delays, potentially affecting real-time applications in UASNs.

Shi et al. [16] propose a lightweight security framework for UANs addressing quantum threats, focusing on data protection, authentication, and malicious node detection. The scheme uses elliptic curve cryptography and hash algorithms, dynamic crypto puzzles, and threshold-based detection, ensuring resistance to quantum attacks. Key contributions include certificate-less authentication and multiparty bit commitment key distribution. Simulations show minimal computational cost, though the scheme has a higher delay than lattice cryptography and may face challenges in highly constrained environments or with greater node mobility.

Diamant et al. [17] propose a physical-layer security scheme for UANs (UWANs), using propagation delay to generate secret keys between Alice and Bob. The protocol leverages the randomness in UWAN topology, ensuring secure communication against passive eavesdropping. Simulations and field tests show its effectiveness, even under mobility and multipath errors. However, the scheme may face challenges in larger networks and is sensitive to environmental factors affecting delay accuracy. A gist of the literature review is demonstrated in Table I.

While several authentication protocols have been proposed for underwater networks, they often rely on computationally expensive operations (e.g., bilinear pairings, multiple exponentiations), lack formal verification, or do not support dynamic network reconfiguration in the face of node failures. For instance, protocols based on traditional RSA or elliptic curve operation (ECC), while secure, incur high communication and computational costs, making them impractical for resource-constrained underwater nodes. Recent blockchain-assisted schemes improve trust automation but introduce additional latency and storage overhead, limiting their scalability. Physical-layer security schemes, though promising, are sensitive to environmental variability and do not address authentication at higher layers. Lightweight protocols often sacrifice security for efficiency, remaining vulnerable to replay and impersonation. Moreover, existing solutions generally lack mechanisms for fallback authentication—a critical requirement for mission-critical underwater operations where node availability cannot be guaranteed.

III. PRELIMINARIES

A. Pentatope-Based Elliptic Curve Cryptography

Consider an elliptic curve ε defined over a finite field $\mathbb{F}_p$, where p is a large prime number. The pentatope extension generalizes this concept by introducing a 5D point group $G_5 = \{(x_1, x_2, x_3, x_4, x_5) \mid x_i \in \mathbb{F}_p\}$. The pentatope extension reduces the number of external global parameters required in cryptographic computations from six to five, optimizing performance and enhancing security [18].

In the pentatope-based elliptic curve cryptography (PEECC) framework, key generation follows the standard ECC approach but incorporates the pentatope number, which is the fifth number in Pascal's triangle and is computed as: $S = ([S(S+1)(S+2)(S+3)]/24)$. This pentatope number eliminates the need for an externally computed shared secret by internally deriving the key value using Euler's function: $K = S^2 + S + 41$. The discrete logarithm problem (DLP) in G_5 is formulated as follows: Given two points $P, Q \in G_5$, determine the scalar $k \in \mathbb{F}_p$ such that $Q = k \times P$.

Authorized licensed use limited to: INDIAN INST OF INFO TECH AND MANAGEMENT. Downloaded on February 15,2026 at 13:05:22 UTC from IEEE Xplore. Restrictions apply.

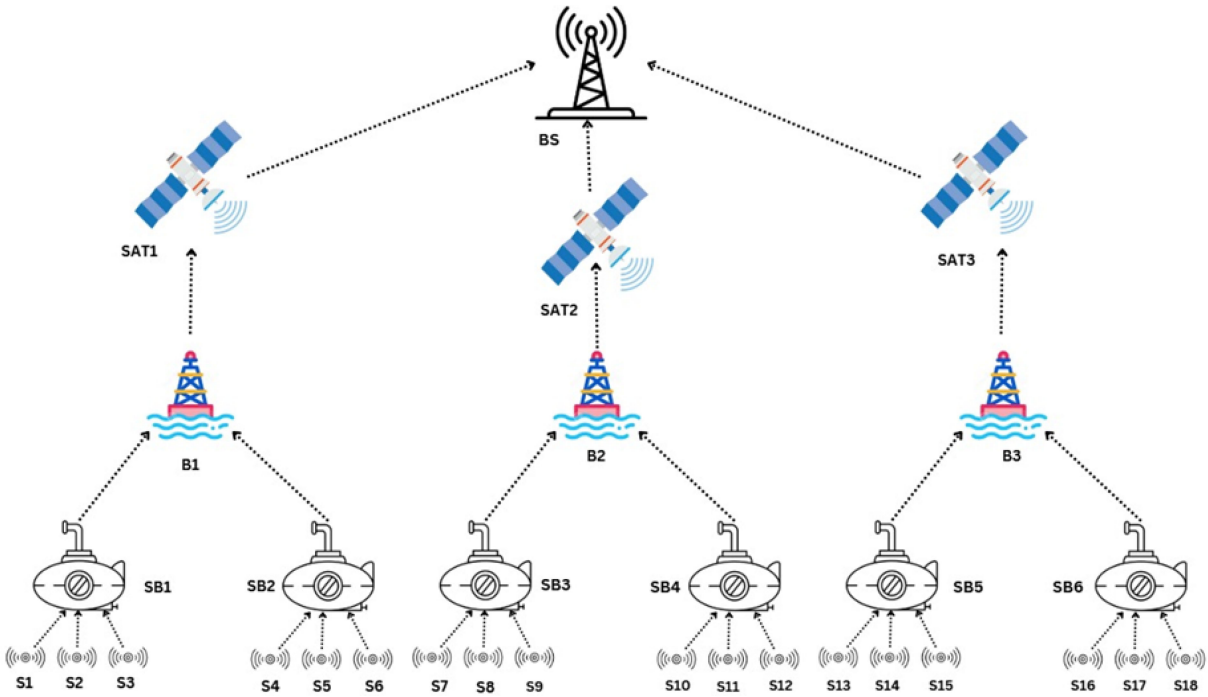

Fig. 1. Network model for UWC systems.

Due to the high-dimensional structure of G_5, the DLP becomes computationally more challenging, with a solving complexity of approximately $2^{5n/2}$, where n is the bit length of p. This complexity is a significant increase compared to traditional elliptic curves, which typically have a solving complexity of $2^{2n/2}$. This increased complexity enhances security against known DLP-based attacks, making PEECC an effective cryptographic method for securing multimedia data transmissions over insecure channels. Benchmarking on an ARM Cortex-A53 shows 5D scalar multiplication incurs 1.3x overhead versus 2-D ECC, offset by reduced message size and fewer rounds of exchange.

B. One-Way Hash Function

Cryptographic hash functions are deterministic one-way hash functions because they have an arbitrary mapping between a long input and a fixed-size output. It can be represented in

$$H : \{0, 1\}^* \longrightarrow \{0, 1\}^n \tag{1}$$

where it takes $L \in \{0, 1\}^*$ as a long input and $O \in \{0, 1\}^n$ as a fixed-length output. Preimage resistance, secondary preimage resistance, and collision resistance with enough randomness are all characteristics of cryptographic hash functions.

C. Network Model

As shown in Fig. 1, the proposed UWC network model is composed of underwater sensors (UWS), SUBs, buoys (B), SAT, and a base station (BS). UWS embedded underwater measures parameters, such as temperature (T), salinity (SAL), pressure (P), and current velocity (V). UWS communicate with SUB using secure short-range wireless communication technologies. SUB serves as a dynamic hub for aggregating UWS data and sending secure messages to the buoys. B enables seamless communication between SUB and SAT. B acts as a relay node, receiving data from SUB and transmitting it to SAT.

B are equipped with GPS modules to provide location-based information along with environmental data (ENV). SAT facilitates long-distance communication between B and BS. A given SAT can receive ENV and GPS coordinates from B and transmit them to the BS. Finally, the BS processes the data received from the SAT, making it accessible for analysis and decision-making. This ensures that the entire communication system remains synchronized and secure. We assume that each SUB is capable of communicating with multiple UWS and B. Similarly, B can interact with SAT. The entire network uses a hierarchical and modular design to ensure efficient data flow and minimal latency, enabling real-time monitoring of underwater environments. Additionally, the network design incorporates redundancy through backup communication links. Each SUB maintains connections with multiple buoys, and buoys can relay through alternate SAT when primary links fail. This redundancy ensures continuous data flow and maintains authentication chains even when individual nodes become unavailable.

D. Notations and Symbols

Table II describes the symbols used while explaining the proposed authentication protocol.

IV. Proposed Authentication Protocol

The section explains the authentication protocol which is developed for the UWC system. The proposed authentication

Authorized licensed use limited to: INDIAN INST OF INFO TECH AND MANAGEMENT. Downloaded on February 15,2026 at 13:05:22 UTC from IEEE Xplore. Restrictions apply.

TABLE II
NOTATIONS

Symbol	Description
UWS	Underwater sensor
SUB	Submarine
SAT	Satellite
B	Buoy
BS	Base station
UWC	Underwater communication
ID	Unique Identifier
PU, PK	Public key, Private key
$\mathcal{P}$	Pentatope elliptic curve
$\mathcal{E}$	Entity
$\in$	Belongs to
$\mathcal{V}$	Verification
$\mathcal{R}$	Registerted IDs
M	Encrypted Message
D	Decrypted message
H(.)	One way hash function
RID	Registered unique identifier
TS	Timestamp
Temp, Press	Temperature, Pressure
CurrVel, Sal	Current Velocity, Salinity
$\|\|$	Concatenation
X, Y, X, W, T	Entity coefficients on elliptic curve
ENV	Environmental data
$E\{PK, M\}$	Denotes encryption of message M using the private key PK

TABLE III
PROTOCOL PHASE SUMMARY TABLE

Phase	Key Steps
Initialization	Select curve, generator, key pairs; derive unique ID
Registration	Compute RID, verification value; exchange with peers; update registration set
Mutual Authentication	Exchange encrypted nonce, ID, timestamp; validate; establish session

scheme mainly consists of three phases that include: 1) System initialization phase; 2) Registration phase; and 3) Mutual authentication phase. UWC system mainly consists of four entities UWS, SUB, B, SAT, and BS. Table II demonstrates a clear description of the symbols along with the notations used in demonstrating the proposed protocol. Table III shows a description of each protocol phase in the proposed methodology.

A. System Initialization Phase

The system initializes in a series of steps as follows.

Step 1: Each entity, $\mathcal{E} \in \{UWS, SUB, B, SAT, BS\}$ selects a pentatope elliptic curve ψ defined by $\psi = X^3 + Y^3 + Z^3 + W^3 + T^3 = dXYZWT$ over a finite field $\mathbb{F}_p$, where p is a large prime number, and d is a constant.

Step 2: $\mathcal{E}$ chooses a generator point $\rho = (X_\rho, Y_\rho, Z_\rho, W_\rho, T_\rho)$ on the curve ψ with a large prime order n.

Step 3: $\mathcal{E}$ generates a private key $PK_i \in \langle 1, n-1 \rangle$ randomly, where $i \in \{UWS, SUB, B, SAT, BS\}$.

Step 4: $\mathcal{E}$ computes its corresponding public key $PU_i = PK_i \times \rho$, where $\times$ denotes the scalar multiplication operation on ψ.

Step 5: The identifier ID_i is derived using a cryptographic hash function (.) over PU_i ensuring uniqueness and resistance to forgery, $ID_i = (PU_i \| E)$.

Step 6: $\mathcal{E}$ directly shares its message $M_i = (ID_i, PU_i)$ with the entities it needs to communicate with.

B. Registration Phase

The Registration Phase of the system enables secure registration of each entity as follows.

Step 1: $\mathcal{E}$ computes a registration identifier $RID_i = H(ID_i \| PU_i \| PK_i)$ and a verification value $\vartheta_i = H(RID_i \| PU_i)$.

Step 2: A registration message is created by $\mathcal{E}$, $M_i = \{RID_i, PU_i, \vartheta_i\}$, and is sent to the communicating entity $j \in \{UWS, SUB, B, SAT, BS\} \cup j \neq i$.

Step 3: j extracts $\{RID_i, PU_i\}$ from M_i and generates $\vartheta_j = H(RID_i, PU_i)$. If $\vartheta_j \neq \vartheta_i$, then M_i is INVALID.

Step 4: Else if M_i is VALID, and if $RID_i \in \mathbb{R}$, then RID_i is already registered in $\mathbb{R}$, which indicates a set of registered IDs, and is considered a duplicate.

Step 5: Else if $\vartheta_j = \vartheta_i \cup RID_i \notin \mathbb{R}$, then RID_i is added to $\mathbb{R}$, and a session $\mathcal{S}_{i \leftrightarrow j}$ is created between the communicating entities.

The registered ID set R is maintained as a hash table or Bloom filter, enabling constant-time or probabilistic O(1) lookups with minimal memory footprint. Each entity stores only relevant subsets of R corresponding to its immediate communication domain (e.g., UWS only stores IDs of its registered SUBs). This avoids unnecessary memory usage on highly constrained nodes. For instance, assuming 160-bit RIDi values and k direct peers, the storage cost is approximately 20 $\times$ k bytes. In typical UWS deployments where a node interacts with fewer than 10 peers, this translates to $<$ 250 bytes.

When N entities join the network, centralized nodes like the BS or SUB maintain full records (O(N)), while constrained devices like UWS and buoys maintain partial views (O(k)), where $k \ll$N. This hierarchical storage design ensures scalability and low overhead even as the network grows. Updates to R (e.g., during revocation or re-registration) are event-driven and infrequent, minimizing synchronization cost.

C. Mutual Authentication Phase

To establish a secure and trustworthy communication channel for underwater systems, mutual authentication is carried out at each stage of the communication process as follows.

Step 1: Initially, UWS sends $M_1 \leftarrow \{\mathbb{E}\{PU_{SUB}, \langle ID_{UWS} \| Nonce_{UWS} \| TS_1 \rangle\}\}$ to SUB. Upon receiving, it decrypts $D_1 \leftarrow \mathbb{D}\{PK_{SUB}, (\mathbb{E}\{PU_{SUB}, \langle ID_{UWS} \| Nonce_{UWS} \| TS_1 \rangle\})\} \approx \langle ID_{UWS} \| Nonce_{UWS} \| TS_1 \rangle$ to authenticate UWS.

Step 2: SUB generates an acknowledgement to UWS $M_2 \leftarrow \{\mathbb{E}\{PU_{UWS}, \langle ID_{SUB} \| Nonce_{UWS} \| TS_2 \rangle\}\}$. UWS will decrypt $D_2 \leftarrow \mathbb{D}\{PK_{UWS}, (\mathbb{E}\{PU_{UWS}, \langle ID_{SUB} \| Nonce_{UWS} \| TS_2 \rangle\})\} \approx \langle ID_{SUB} \| Nonce_{UWS} \| TS_2 \rangle$ and confirms the identity of SUB.

Step 3: A session $\mathcal{S}_{UWS \leftrightarrow SUB}$ is established upon verification of nonce $|Nonce_{recv}^{SUB} = Nonce_{sent}^{UWS}|$ and timestamp $|TS_2 - TS_1| < \Delta T$. Each communication hop in the protocol uses a newly generated nonce and localized timestamp validation

Authorized licensed use limited to: INDIAN INST OF INFO TECH AND MANAGEMENT. Downloaded on February 15,2026 at 13:05:22 UTC from IEEE Xplore. Restrictions apply.

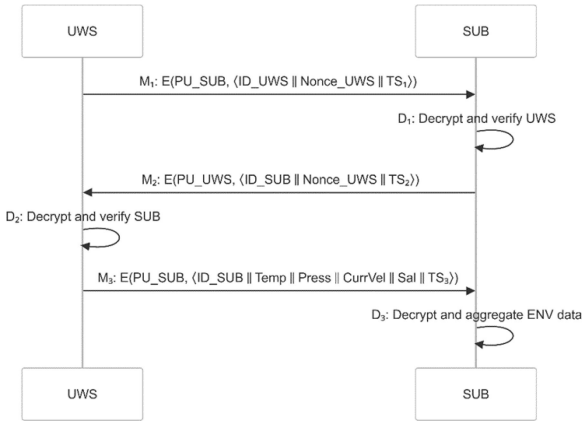

Fig. 2. Mutual authentication between UWS and SUB.

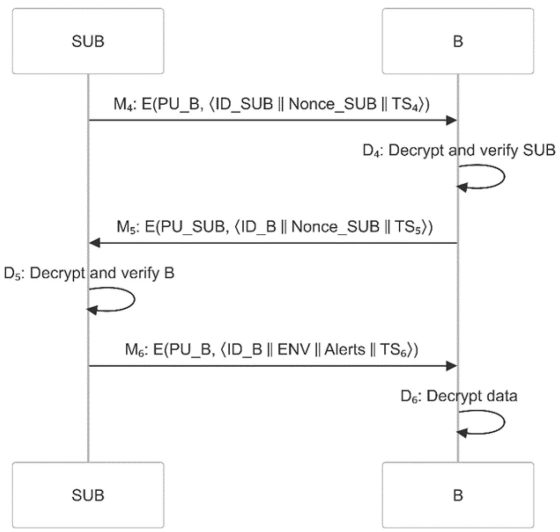

Fig. 3. Mutual authentication between SUB and B.

to confirm freshness. This hop-wise freshness verification mitigates replay attacks and eliminates the need for end-to-end nonce propagation or global session tracking.

Step 4: UWS sends $M_3 \longleftarrow \{\mathbb{E}\{PU_{SUB}, \langle ID_{SUB} \| Temp \| Press \| CurrVel \| Sal \| TS_3\rangle\}\}$ to SUB maintaining confidentiality and message integrity. SUB decrypts $D_3 \leftarrow \mathbb{D}\{PK_{SUB}, (\mathbb{E}\{PU_{SUB}, \langle ID_{SUB} \| Temp \| Press \| CurrVel \| Sal \| TS_3\rangle\})\}$ and aggregates the data $ENV \longleftarrow \{Temp \| Press \| CurrVel \| Sal\}$. Fig. 2 clearly explains the mutual authentication between UWS and SUB.

Step 5: SUB sends $M_4 \leftarrow \{\mathbb{E}\{PU_B, \langle ID_{SUB} \| Nonce_{SUB} \| TS_4\rangle\}\}$ to B. After acquiring M_4, B decrypts $D_4 \leftarrow \mathbb{D}\{PK_B, (\mathbb{E}\{PU_B, \langle ID_{SUB} \| Nonce_{SUB} \| TS_4\rangle\})\} \approx \langle ID_{SUB} \| Nonce_{SUB} \| TS_4\rangle$ to authenticate SUB.

Step 6: B sends $M_5 \leftarrow \{\mathbb{E}\{PU_{SUB}, \langle ID_B \| Nonce_{SUB} \| TS_5\rangle\}\}$ to SUB as an acknowledgement. SUB decrypts $D_5 \leftarrow \mathbb{D}\{PK_{SUB}, (\mathbb{E}\{PU_{SUB}, \langle ID_B \| Nonce_{SUB} \| TS_5\rangle\})\} \approx \langle ID_B \| Nonce_{SUB} \| TS_5\rangle$ to affirm the identity of B.

Step 7: A session $\mathcal{S}_{SUB \leftrightarrow B}$ is established upon verification of nonce $|Nonce^{B}_{recv} = Nonce^{SUB}_{sent}|$ and timestamp $|TS_5 - TS_4| < \triangle T$.

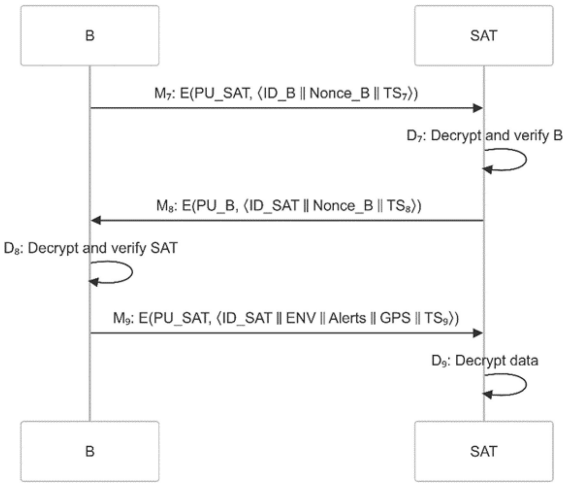

Fig. 4. Mutual authentication between B and SAT.

Step 8: SUB sends $M_6 \longleftarrow \{\mathbb{E}\{PU_B, \langle ID_B \| ENV \| Alerts \| TS_6\rangle\}\}$ to B maintaining confidentiality and message integrity. B decrypts $D_6 \leftarrow \mathbb{D}\{PK_B, (\mathbb{E}\{PU_B, \langle ID_B \| ENV \| Alerts \| TS_6\rangle\})\}$. Alerts sent by SUB to B include jamming attacks, spoofing attacks, eavesdropping, and many other cyber threats. Fig. 3 clearly explains the mutual authentication between SUB and B.

Step 9: B sends $M_7 \leftarrow \{\mathbb{E}\{PU_{SAT}, \langle ID_B \| Nonce_B \| TS_7\rangle\}\}$ to SAT. Upon receiving it, SAT decrypts $D_7 \leftarrow \mathbb{D}\{PK_{SAT}, (\mathbb{E}\{PU_{SAT}, \langle ID_B \| Nonce_B \| TS_7\rangle\})\} \approx \langle ID_B \| Nonce_B \| TS_7\rangle$ to authenticate B.

Step 10: SAT acknowledges by sending $M_8 \leftarrow \{\mathbb{E}\{PU_B, \langle ID_{SAT} \| Nonce_B \| TS_8\rangle\}\}$ to B. B decrypts $D_8 \leftarrow \mathbb{D}\{PK_B, (\mathbb{E}\{PU_B, \langle ID_{SAT} \| Nonce_B \| TS_8\rangle\})\} \approx \langle ID_{SAT} \| Nonce_B \| TS_8\rangle$ to affirm the identity of SAT.

Step 11: A session $S_{B \leftrightarrow SAT}$ is established after verifying that $Nonce^{SAT}_{recv} = Nonce^{B}_{sent}$ and ensuring that the timestamp difference $|TS_8 - TS_7| < \triangle T$ is within the allowed range.

Step 12: B sends $M_9 \leftarrow \{\mathbb{E}\{PU_{SAT}, \langle ID_{SAT} \| ENV \| Alerts \| GPS \| TS_9\rangle\}\}$ to SAT, ensuring confidentiality and message integrity. SAT decrypts $D_9 \leftarrow \mathbb{D}\{PK_{SAT}, (\mathbb{E}\{PU_{SAT}, \langle ID_{SAT} \| ENV \| Alerts \| GPS \| TS_9\rangle\})\}$. B gathers situation analysis reports and sends them to SAT along with GPS coordinates. Fig. 4 illustrates the mutual authentication between B and SAT.

Step 13: SAT sends $M_{10} \leftarrow \{\mathbb{E}\{PU_{BS}, \langle ID_{SAT} \| Nonce_{SAT} \| TS_{10}\rangle\}\}$ to BS. Upon receipt, BS decrypts $D_{10} \leftarrow \mathbb{D}\{PK_{BS}, (\mathbb{E}\{PU_{BS}, \langle ID_{SAT} \| Nonce_{SAT} \| TS_{10}\rangle\})\} \approx \langle ID_{SAT} \| Nonce_{SAT} \| TS_{10}\rangle$ to authenticate SAT.

Step 14: BS acknowledges by sending $M_{11} \leftarrow \{\mathbb{E}\{PU_{SAT}, \langle ID_{BS} \| Nonce_{SAT} \| TS_{11}\rangle\}\}$ to SAT. SAT decrypts $D_{11} \leftarrow \mathbb{D}\{PK_{SAT}, (\mathbb{E}\{PU_{SAT}, \langle ID_{BS} \| Nonce_{SAT} \| TS_{11}\rangle\})\} \approx \langle ID_{BS} \| Nonce_{SAT} \| TS_{11}\rangle$ to affirm the identity of BS.

Step 15: A session $S_{SAT \leftrightarrow BS}$ is established upon verifying that $Nonce^{BS}_{recv} = Nonce^{SAT}_{sent}$ and ensuring that the timestamp difference $|TS_{11} - TS_{10}| < \triangle T$ is within the allowed range.

Step 16: SAT sends $M_{12} \leftarrow \{\mathbb{E}\{PU_{BS}, \langle ID_{BS} \| ENV \| Alerts \| GPS \| LOGS \| TS_{12}\rangle\}\}$ to BS, maintaining confidentiality and message integrity. BS decrypts $D_{12} \leftarrow$

Authorized licensed use limited to: INDIAN INST OF INFO TECH AND MANAGEMENT. Downloaded on February 15,2026 at 13:05:22 UTC from IEEE Xplore. Restrictions apply.

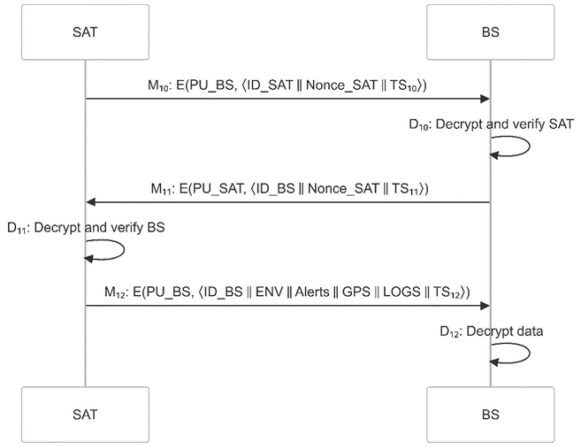

Fig. 5. Mutual authentication between SAT and BS.

$\mathbb{D}\{PK_{BS}, (\mathbb{E}\{PU_{BS}, \langle ID_{BS} \| ENV \| Alerts \| GPS \| LOGS \| TS_{12} \rangle\})\}$. SAT transmits machine updates and logistic updates (LOGS) to BS. Fig. 5 illustrates the mutual authentication between SAT and BS.

D. Resilience Through Fallback Paths

To address partial node outages, the protocol supports dynamic reassignment to fallback authentication peers. For instance, if a buoy B_1 becomes unresponsive, a SUB may reinitiate mutual authentication with an alternate buoy B_2 from its neighbour list. Similarly, buoys are capable of routing to secondary SAT when the primary SAT fails or experiences a delay. These fallback entities are preregistered during the system initialization phase and maintained in a trusted cache to ensure swift rerouting without compromising security. The protocol reuses nonce freshness and timestamp bounds to validate these rerouted sessions, ensuring continuity of secure communication.

The protocol is designed to tolerate moderate mobility of entities, such as AUVs and buoys. For ongoing sessions (e.g., SUWS $\leftrightarrow$ SUB), session validity is maintained as long as the communication latency remains within the acceptable ΔT bound and packet loss does not exceed threshold limits.

When a mobile node moves into a new SUB's communication range, it can initiate reauthentication immediately using the same protocol steps (M1–M3). Due to the lightweight nature of the cryptographic operations and use of predistributed public keys, a new session can be securely established in under 1 ms. This allows the system to adapt dynamically to mobility without introducing significant delay or overhead.

E. Long-Term Key Management and Security

To ensure cryptographic sustainability in the face of environmental and security risks, the following measures are adopted.

1) *Secure Storage of Private Keys (PK_i):* Private keys are securely stored on UWS nodes using tamper-resistant hardware components, such as secure elements (e.g., Microchip ATECC608A) or trusted platform modules (TPMs), where hardware permits. If such modules are unavailable due to cost or power constraints, obfuscation techniques and memory isolation are employed within the node's firmware to mitigate physical extraction risks.
2) *Key Revocation Mechanism:* A lightweight key revocation protocol is implemented. The BS periodically issues a signed revocation list (RL) containing the IDs of compromised or expired nodes. This RL is broadcast to all entities in the network, and each entity cross-checks incoming messages against the RL before initiating or responding to authentication attempts. The RL is authenticated using a management key known to all trusted nodes.
3) *Initial Public Key Distribution (PU_i):* During the initial deployment and registration phase, each node securely uploads its public key PU_i to the BS via a trusted link (e.g., physical interface, acoustic short-range line-of-sight). The public key is associated with its identity ID_i through a hash-based binding

$$ID_i = H(PU_i \| E \| \text{DeviceSerial})$$

preventing identity spoofing. These public keys are then disseminated to other entities in the network to enable mutual authentication.

These provisions ensure that the proposed protocol not only supports secure session key establishment but also addresses long-term cryptographic resilience in real-world deployments.

V. Security Analysis of the Proposed Protocol

A. Threat Model

We consider adversaries capable of passive eavesdropping, active impersonation, replay, delay injection, and physical tampering. The adversary may compromise a subset of nodes, extract stored credentials, or manipulate propagation delays to mount desynchronization attacks. The protocol is designed to resist these threats through the following defences.

1) Unique, nonreusable nonces and adaptive timestamp validation prevent replay and delay injection.
2) Asymmetric encryption and secure key derivation prevent man-in-the-middle and eavesdropping.
3) Tamper-resistant storage and hierarchical credential management limit the impact of physical compromise.
4) Revocation mechanisms and dynamic fallback paths ensure network resilience even when some nodes are compromised or unavailable.

B. Formal Security Analysis

The security of the proposed scheme is formally analyzed using BAN, a widely recognized method for verifying authentication protocols. BAN logic provides a structured approach to reasoning about security properties, ensuring that the protocol achieves mutual authentication and data integrity. By applying BAN logic [19], [20], the proposed scheme effectively resists potential attacks and guarantees secure communication between the involved entities. We introduced labeled subsections (e.g., Goal Ω_1 – Mutual Authentication: UWS $\leftrightarrow$ SUB) and provided step-by-step mappings of logic derivations to protocol messages.

Authorized licensed use limited to: INDIAN INST OF INFO TECH AND MANAGEMENT. Downloaded on February 15,2026 at 13:05:22 UTC from IEEE Xplore. Restrictions apply.

1) Notations: Let ε, φ denote two entities, and M_ε, M_φ denote two messages. We use the following notation.

1) $\preccurlyeq M_\varepsilon \succcurlyeq$: Message M_ε is fresh
2) $\varepsilon \Leftarrow M_\varepsilon$: Principal ε sees the statement M_ε
3) $\varepsilon \rightrightarrows M_\varepsilon$: Principal ε has jurisdiction over statement M_ε
4) $\varepsilon \gg M_\varepsilon$: Principal ε believes statement M_ε or authorized M_ε
5) $\varepsilon \sim M_\varepsilon$: Principal ε once said the statement M_ε
6) $\{M_\varepsilon\}_{PU_\varepsilon}$: Statement M_ε is encrypted under public key of the principal ε
7) $\varphi \overset{PU_\varepsilon}{\Leftrightarrow} \varepsilon$: φ and ε use PU_ε to communicate securely by exchanging the encrypted messages.

2) Rules: $\mathfrak{R}_1$: *Message-Meaning Rule:* If ε believes φ, then it shares PU_ε with φ and sees a message, M_φ encrypted with that key PU_ε, then ε believes φ sent the message M_φ

$$\frac{\varepsilon \gg \varphi \overset{PU_\varepsilon}{\Longleftrightarrow} \varepsilon, \varepsilon \Leftarrow \{M_\varphi\}_{PU_\varepsilon}}{\varepsilon \gg \left(\varphi \sim M_\varphi\right)}.$$

$\mathfrak{R}_2$: *Nonce-Verification Rule:* If ε believes M_φ is fresh and that φ sent it, then ε believes φ believes M_φ

$$\frac{\varepsilon \gg\preccurlyeq M_\varphi \succcurlyeq, \varepsilon \gg \left(\varphi \sim M_\varphi\right)}{\varepsilon \gg \left(\varphi \gg M_\varphi\right)}.$$

$\mathfrak{R}_3$: *Jurisdiction Rule:* If ε believes φ has jurisdiction over M_φ and believes that φ believes M_φ, then ε believes M_φ

$$\frac{\varepsilon \gg \left(\varphi \Rightarrow M_\varphi\right), \varepsilon \gg \left(\varphi \gg M_\varphi\right)}{\varepsilon \gg M_\varphi}.$$

$\mathfrak{R}_4$: *Freshness Rule:* If part of a message is fresh, the entire message is fresh

$$\frac{\varepsilon \gg\preccurlyeq (M_\varepsilon) \succcurlyeq}{\varepsilon \gg\preccurlyeq \left(M_\varepsilon, M_\varphi\right) \succcurlyeq}.$$

$\mathfrak{R}_5$: *Belief Rule:* If ε believes φ that believes entire message, then ε, φ also believes a part of the message

$$\frac{\varepsilon \gg \varphi \gg \left(M_\varepsilon, M_\varphi\right)}{\varepsilon \gg \varphi \gg (M_\varepsilon)}.$$

3) BAN Logic Proof: Step 1: Primary security goals for secure mutual authentication between UWS, SUB, B, SAT, and BS are Ω_1 : UWS $\gg$ (UWS $\overset{PU_{SUB}}{\Longleftrightarrow}$ SUB); Ω_2 : SUB $\gg$ (UWS $\overset{PU_{UWS}}{\Longleftrightarrow}$ SUB); Ω_3 : SUB $\gg$ (SUB $\overset{PU_B}{\Longleftrightarrow}$ B); Ω_4:$B \gg$ (SUB $\overset{PU_{SUB}}{\Longleftrightarrow}$ B); Ω_5 : $B \gg$ (B $\overset{PU_{SAT}}{\Longleftrightarrow}$ SAT); Ω_6 : SAT $\gg$ (B $\overset{PU_B}{\Longleftrightarrow}$ SAT); Ω_7 : SAT $\gg$ (SAT $\overset{PU_{BS}}{\Longleftrightarrow}$ BS); Ω_8 : BS $\gg$ (SAT $\overset{PU_{SAT}}{\Longleftrightarrow}$ BS)

Step 2: The messages among the five entities involved in UWC are as follows:

1) $M_1 \leftarrow \mathbb{E}\{PU_{SUB}, \langle ID_{UWS} \| Nonce_{UWS} \| TS_1\rangle\}$
2) $M_2 \leftarrow \mathbb{E}\{PU_{UWS}, \langle ID_{SUB} \| Nonce_{UWS} \| TS_2\rangle\}$
3) $M_3 \leftarrow \mathbb{E}PU_{SUB}, \langle ID_{SUB} \| Temp \| Press \| CurrVel \| Sal \| TS_3\rangle$
4) $M_4 \leftarrow \mathbb{E}\{PU_B, \langle ID_{SUB} \| Nonce_{SUB} \| TS_4\rangle\}$
5) $M_5 \leftarrow \mathbb{E}\{PU_{SUB}, \langle ID_B \| Nonce_{SUB} \| TS_5\rangle\}$
6) $M_6 \leftarrow \mathbb{E}\{PU_B, \langle ID_B \| ENV \| Alerts \| TS_6\rangle\}$
7) $M_7 \leftarrow \mathbb{E}PU_{SAT}, \langle ID_B \| Nonce_B \| TS_7\rangle$
8) $M_8 \leftarrow \mathbb{E}\{PU_B, \langle ID_{SAT} \| Nonce_B \| TS_8\rangle\}$
9) $M_9 \leftarrow \mathbb{E}\{PU_{SAT}, \langle ID_{SAT} \| ENV \| Alerts \| GPS \| TS_9\rangle\}$
10) $M_{10} \leftarrow \mathbb{E}\{PU_{BS}, \langle ID_{SAT} \| Nonce_{SAT} \| TS_{10}\rangle\}$
11) $M_{11} \leftarrow \mathbb{E}\{PU_{SAT}, \langle ID_{BS} \| Nonce_{SAT} \| TS_{11}\rangle\}$
12) $M_{12} \leftarrow \mathbb{E}\{PU_{BS}, \langle ID_{BS} \| ENV \| Alerts \| GPS \| LOGS \| TS_{12}\rangle\}$

Step 3: The initial assumptions are taken as: $\mathcal{A}_1 : \varepsilon \gg\preccurlyeq (Nonce_\varepsilon) \succcurlyeq$; $\mathcal{A}_2 : \varepsilon \gg\preccurlyeq (TS_n) \succcurlyeq$ where $n \in \mathbb{N}$; $\mathcal{A}_3 : \varepsilon \gg (\varphi \rightrightarrows ID_\varphi)$; $\mathcal{A}_4 : \varepsilon \gg \varphi \overset{PU_\varepsilon}{\Longleftrightarrow} \varepsilon$

Step 4: Proof using BAN logic with all the rules, messages, and assumptions is as follows:

$\mathfrak{s}_1$: SUB $\Leftarrow \langle ID_{UWS} \| Nonce_{UWS} \| TS_1\rangle_{PU_{SUB}}$; inferred from M_1

$\mathfrak{s}_2$: SUB $\gg (UWS \sim \langle ID_{UWS} \| Nonce_{UWS}\rangle)$; derived from $\mathfrak{R}_4$ and $\mathcal{A}_4$

$\mathfrak{s}_3$: SUB $\gg\preccurlyeq (ID_{UWS} \| Nonce_{UWS}) \succcurlyeq$; derived from $\mathfrak{R}_4$ and $\mathcal{A}_1$

$\mathfrak{s}_4$: SUB $\gg$ $UWS \gg \langle ID_{UWS} \| Nonce_{UWS}\rangle$; using $\mathfrak{R}_2$, $\mathfrak{s}_2$, and $\mathfrak{s}_3$

$\mathfrak{s}_5$: SUB $\gg (UWS \overset{P_{U_{UWS}}}{\Longleftrightarrow} SUB)$; from $\mathfrak{R}_3$ and $\mathcal{A}_3$, Goal 2 (Ω_2) is achieved

$\mathfrak{s}_6$: UWS $\Leftarrow \langle ID_{SUB} \| Nonce_{UWS} \| TS_2\rangle_{PU_{UWS}}$; inferred from M_2

$\mathfrak{s}_7$: UWS $\gg (SUB \sim \langle ID_{SUB} \| Nonce_{UWS}\rangle)$; derived from $\mathfrak{R}_1$ and $\mathcal{A}_4$

$\mathfrak{s}_8$: UWS $\gg SUB \gg \langle ID_{SUB} \| Nonce_{UWS}\rangle$; using $\mathfrak{R}_2$, $\mathfrak{s}_6$, and $\mathfrak{s}_7$

$\mathfrak{s}_9$: UWS $\gg (UWS \overset{P_{U_{SUB}}}{\Longleftrightarrow} SUB)$; from $\mathfrak{R}_3$ and $\mathcal{A}_3$, Goal 1 (Ω_1) is achieved

$\mathfrak{s}_{10}$: B $\Leftarrow \langle ID_{SUB} \| Nonce_{SUB} \| TS_4\rangle_{PU_B}$; inferred from M_4

$\mathfrak{s}_{11}$: B $\gg (SUB \sim \langle ID_{SUB} \| Nonce_{SUB}\rangle)$; derived from $\mathfrak{R}_1$ and $\mathcal{A}_4$

$\mathfrak{s}_{12}$: B $\gg\preccurlyeq (ID_{SUB} \| Nonce_{SUB}) \succcurlyeq$; derived from $\mathfrak{R}_4$ and $\mathcal{A}_1$

$\mathfrak{s}_{13}$: B $\gg SUB \gg \langle ID_{SUB} \| Nonce_{SUB}\rangle$; using $\mathfrak{R}_2$, $\mathfrak{s}_{11}$, and $\mathfrak{s}_{12}$

$\mathfrak{s}_{14}$: B $\gg (SUB \overset{P_{U_{SUB}}}{\Longleftrightarrow} B)$; from $\mathfrak{R}_3$ and $\mathcal{A}_3$, Goal 4(Ω_4) is achieved

$\mathfrak{s}_{15}$: SUB $\Leftarrow \langle ID_B \| Nonce_{SUB} \| TS_5\rangle_{PU_{SUB}}$; inferred from M_5

$\mathfrak{s}_{16}$: SUB $\gg (SUB \overset{P_{U_B}}{\Longleftrightarrow} B)$; Goal 3($\Omega_3$) is achieved

$\mathfrak{s}_{17}$: SAT $\Leftarrow \langle ID_B \| Nonce_B \| TS_7\rangle_{PU_{SAT}}$; inferred from M_7

$\mathfrak{s}_{18}$: SAT $\gg (B \sim \langle ID_B \| Nonce_B\rangle)$; derived from $\mathfrak{R}_1$ and $\mathcal{A}_4$

$\mathfrak{s}_{19}$: SAT $\gg\preccurlyeq (ID_B \| Nonce_B) \succcurlyeq$; derived from $\mathfrak{R}_4$ and $\mathcal{A}_1$

$\mathfrak{s}_{20}$: SAT $\gg B \gg \langle ID_B \| Nonce_B\rangle$; using $\mathfrak{R}_2$, $\mathfrak{s}_{18}$, and $\mathfrak{s}_{19}$

$\mathfrak{s}_{21}$: SAT $\gg (B \overset{P_{U_B}}{\Longleftrightarrow} SAT)$; from $\mathfrak{R}_3$ and $\mathcal{A}_3$, Goal 6(Ω_6) is achieved

$\mathfrak{s}_{22}$: B $\Leftarrow \langle ID_{SAT} \| Nonce_B \| TS_8\rangle_{PU_B}$; inferred from M_8

$\mathfrak{s}_{23}$: B $\gg (B \overset{P_{U_{SAT}}}{\Longleftrightarrow} SAT)$; Goal 5($\Omega_5$) is achieved

$\mathfrak{s}_{24}$: BS $\Leftarrow \langle ID_{SAT} \| Nonce_{SAT} \| TS_{10}\rangle_{PU_{BS}}$; inferred from M_{10}

$\mathfrak{s}_{25}$: BS $\gg (SAT \sim \langle ID_{SAT} \| Nonce_{SAT}\rangle)$; derived from $\mathfrak{R}_1$ and $\mathcal{A}_4$

$\mathfrak{s}_{26}$: BS $\gg\preccurlyeq (ID_{SAT} \| Nonce_{SAT}) \succcurlyeq$; derived from $\mathfrak{R}_4$ and $\mathcal{A}_1$

$\mathfrak{s}_{27}$: BS $\gg SAT \gg \langle ID_{SAT} \| Nonce_{SAT}\rangle$; using $\mathfrak{R}_2$, $\mathfrak{s}_{25}$, and $\mathfrak{s}_{26}$

$\mathfrak{s}_{28}$: BS $\gg (SAT \overset{P_{U_{SAT}}}{\Longleftrightarrow} BS)$; from $\mathfrak{R}_3$ and $\mathcal{A}_3$, Goal 8(Ω_8) is achieved

Authorized licensed use limited to: INDIAN INST OF INFO TECH AND MANAGEMENT. Downloaded on February 15,2026 at 13:05:22 UTC from IEEE Xplore. Restrictions apply.

$\mathfrak{s}_{29}$: SAT $\Leftarrow$ $\langle ID_{BS} \| Nonce_{SAT} \| TS_{11} \rangle_{PU_{SAT}}$; inferred from M_{11}

$\mathfrak{s}_{30}$: SAT $\gg$ $(SAT \overset{P_{U_{BS}}}{\Longleftrightarrow} BS)$; Goal 7($\Omega_7$) is achieved

The secrecy and semantic security of session keys are formally verified using BAN logic, ensuring that session keys remain confidential even if other protocol messages are intercepted. The Scyther tool analysis confirms that all secrecy claims are satisfied, with no successful attacks detected in over 60 test cases covering concurrent sessions and multiple adversarial scenarios. This provides strong assurance that session keys cannot be derived by an adversary with access to protocol transcripts, satisfying the standard notions of semantic security in cryptographic protocols.

C. Informal Security Analysis

Proposition 1: The proposed authentication protocol prevents identity spoofing in the UWC system.

Proof: Let the set of entities in the UWC system be denoted as $\mathcal{E} = \{E_1, E_2, \ldots, E_n\}$, where each entity E_i is initialized with a unique cryptographic identifier ID_i and a key pair (SK_i, PK_i). During the registration phase, each entity E_i sends its identity ID_i along with a signature $\text{Sig}(ID_i, SK_i)$ to the central authority for validation. The verification process at the central authority involves checking if the signature is valid: $\text{Verify}(\text{Sig}(ID_i, SK_i), PK_i) = \text{True}$. If the verification fails, the entity is rejected. Therefore, an adversary cannot forge a valid identity or key pair, preventing identity spoofing in the system. ■

Proposition 2: The proposed authentication protocol is resistant to replay attacks.

Proof: Each entity generates a nonce N_i and a timestamp TS_i for every authentication attempt. On receipt of message $\text{Msg}_i = (ID_i, N_i, TS_i)$, the receiving node verifies that the nonce N_i is not reused, i.e., $N_i \notin$ Used Nonces, and that the timestamp TS_i lies within the permissible delay window, i.e., $|\text{CurrentTime} - TS_i| \leq \Delta T$. To address varying propagation delays inherent in underwater acoustic channels, the value of ΔT is determined empirically based on the latency profiles of the deployed environment. Additionally, an adaptive ΔT mechanism is proposed: each node maintains a rolling average of recent internode delays and dynamically adjusts ΔT to accommodate legitimate fluctuations while still detecting replay attempts. This approach ensures robustness in dynamic conditions without risking session hijack through stale message injection. ■

Proposition 3: The proposed authentication protocol prevents man-in-the-middle attacks.

Proof: Let E_i and E_j be two communicating entities. The protocol uses asymmetric encryption with ECC. Each entity encrypts the message Msg_i with the recipient's public key PK_j: $\text{Enc}_{PK_j}(\text{Msg}_i) = \text{Ciphertext}_i$. Upon receiving the encrypted message, the recipient E_j decrypts it using their private key SK_j: $\text{Dec}_{SK_j}(\text{Ciphertext}_i) = \text{Msg}_i$. Since only E_j has the corresponding private key SK_j, any intermediary attacker intercepting the communication would not be able to decrypt or alter the message. This ensures the prevention of MITM attacks. ■

Proposition 4: The proposed authentication protocol ensures secure key establishment between entities.

Proof: During the key establishment phase, let E_i and E_j exchange public keys PK_i and PK_j, respectively. The entities then use these keys to establish a shared secret K_{ij} using a Diffie-Hellman key exchange: $K_{ij} = DH(PK_i, SK_j) = DH(PK_j, SK_i)$, where $DH(\cdot)$ denotes the Diffie-Hellman key exchange function. The resulting shared secret K_{ij} is used to encrypt subsequent messages exchanged between E_i and E_j: $\text{Enc}_{K_j}(\text{Msg}_i) = \text{Ciphertext}_i$. Since the key exchange relies on the private keys SK_i and SK_j, only the legitimate entities can establish the shared secret and thus ensure secure communication, preventing unauthorized entities from eavesdropping or tampering with messages. To resist delay injection, the protocol enforces bounded ΔT freshness checks per hop. Replay or manipulated-latency attacks are detected when the time window exceeds allowed tolerances, triggering session abort. ■

Proposition 5: The proposed authentication protocol resists stolen verifier and ESL attacks.

Proof: Each entity's long-term private key is used only to authenticate session establishment messages. Session keys are ephemeral, derived from unique nonces and timestamps, and never stored persistently. Even if an adversary compromises a node's private key or extracts stored credentials, they cannot derive past or future session keys. Compromised credentials allow impersonation only during the active registration phase; once registered, credentials are bound to a unique ID and cannot be replayed or reused for unauthorized access. Furthermore, the registration set (R) is periodically synchronized and verified against a RL maintained by the BS, ensuring that compromised nodes are promptly excluded from the network. ■

D. Security Analysis Using Scyther

UWC systems are inherently vulnerable to various cyber threats, necessitating robust security protocols to ensure confidentiality, authentication, and data integrity. Formal verification tools, such as Scyther provide a rigorous analysis of security properties, ensuring that a protocol can withstand potential attacks. Scyther verifies several critical security properties, including secrecy, authentication, weak agreement (Weakagree), and noninjective synchronization (Nisynch). The secrecy property ensures that sensitive information, such as cryptographic keys and nonces, remains confidential. Formally, let S represent a secret shared between two entities ε_A and ε_B

$$\forall A, \Pr[A(S) = S] \leq \theta. \tag{2}$$

The secrecy property holds if and only if an adversary A cannot deduce S from intercepted messages, as shown in (2), where θ is an arbitrarily small probability. This ensures that even if A intercepts encrypted communication, the probability of extracting sensitive information remains negligible. Another crucial property verified by Scyther is authentication, which guarantees that messages originate from legitimate entities without being altered during transmission. If an entity ε_A

Authorized licensed use limited to: INDIAN INST OF INFO TECH AND MANAGEMENT. Downloaded on February 15,2026 at 13:05:22 UTC from IEEE Xplore. Restrictions apply.

Scyther results : verify

Claim				Status		Comments
RealTimeAuth	Sensor	RealTimeAuth,Sensor1	Secret NonceS	Ok	Verified	No attacks.
		RealTimeAuth,Sensor2	Weakagree	Ok	Verified	No attacks.
		RealTimeAuth,Sensor3	Nisynch	Ok	Verified	No attacks.
		RealTimeAuth,Sensor4	Alive	Ok	Verified	No attacks.
	Submarine	RealTimeAuth,Sub1	Secret NonceSub	Ok	Verified	No attacks.
		RealTimeAuth,Sub2	Weakagree	Ok	Verified	No attacks.
		RealTimeAuth,Sub3	Nisynch	Ok	Verified	No attacks.
		RealTimeAuth,Sub4	Alive	Ok	Verified	No attacks.
	Buoy	RealTimeAuth,Buoy1	Secret NonceB	Ok	Verified	No attacks.
		RealTimeAuth,Buoy2	Weakagree	Ok	Verified	No attacks.
		RealTimeAuth,Buoy3	Nisynch	Ok	Verified	No attacks.
		RealTimeAuth,Buoy4	Alive	Ok	Verified	No attacks.
	Satellite	RealTimeAuth,Sat1	Secret NonceSat	Ok	Verified	No attacks.
		RealTimeAuth,Sat2	Weakagree	Ok	Verified	No attacks.
		RealTimeAuth,Sat3	Nisynch	Ok	Verified	No attacks.
		RealTimeAuth,Sat4	Alive	Ok	Verified	No attacks.
	BaseStation	RealTimeAuth,Base1	Secret NonceBS	Ok	Verified	No attacks.
		RealTimeAuth,Base2	Weakagree	Ok	Verified	No attacks.
		RealTimeAuth,Base3	Nisynch	Ok	Verified	No attacks.

Done.

Fig. 6. Scyther tool verification results.

receives a message m with a valid cryptographic signature $\sigma(m)$, it should confirm that m was indeed sent by ε_B

$$\forall \varepsilon_A, \varepsilon_B \quad \exists m \text{ such that } \sigma(m) = \text{valid} \Rightarrow m \text{ sent by } \varepsilon_B. \tag{3}$$

Equation (3) prevents impersonation attacks, ensuring that only authorized entities can participate in secure communication. The Weakagree property guarantees that if an entity ε_A believes it is communicating with ε_B, then ε_B must have been involved in the session. This prevents man-in-the-middle attacks, where an attacker could forge responses to mislead an entity into believing it is communicating with a legitimate participant. Equation (4) ensures that any perceived communication session has actual participation from the claimed entity, where $P(\varepsilon_A, \varepsilon_B)$ denotes a protocol execution between ε_A and ε_B

$$\forall \varepsilon_A, \varepsilon_B \quad P(\varepsilon_A, \varepsilon_B) \Rightarrow \exists P(\varepsilon_B, \varepsilon_A). \tag{4}$$

The Nisynch property further strengthens protocol security by ensuring that messages are exchanged in a causally ordered sequence. Equation (5) prevents replay attacks, where an adversary intercepts and retransmits old messages to deceive system participants. The property ensures that if a message m is received at time t_r, then it must have been sent at time t_s, satisfying $t_s \leq t_r$. This ensures that all valid protocol executions maintain time consistency, thereby preventing attackers from reusing old messages

$$\forall m, \text{ if } m \text{ is received at } t_r, \text{ then } m \text{ was sent at } t_s \text{ with } t_s \leq t_r. \tag{5}$$

Upon running the Scyther verification tool, all entities in the UWC system, including UWS, SUB, B, SAT, and BS, successfully passed the security validation [26], [27], [28], [29], [30], [31]. Each claim for secrecy, authentication, Weakagree, and Nisynch was verified with no attacks detected, affirming the protocol's resilience against adversarial threats, as shown in Fig. 6. The Scyther analysis was configured for 5 protocol roles with up to 5 concurrent sessions each. Claims on secrecy,Weakagree, and synchronization were all satisfied across more than 60 test cases, with no attacks found. For

Authorized licensed use limited to: INDIAN INST OF INFO TECH AND MANAGEMENT. Downloaded on February 15,2026 at 13:05:22 UTC from IEEE Xplore. Restrictions apply.

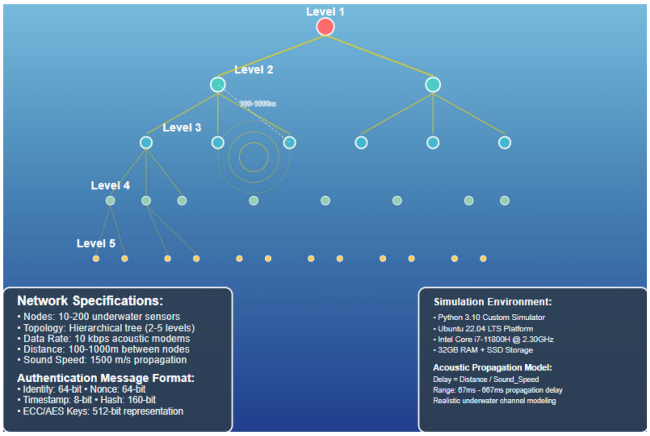

Fig. 7. Illustration of experimental setup.

formal analysis in the Scyther model, alerts are abstracted as data structures authenticated using the current session key. Claims on integrity and authenticity cover alert payloads as they are protected within the encrypted message envelope and verified using shared secrets.

VI. Performance Evaluation

A. Experimental Setup

The experimental evaluation was conducted using a custom-built underwater network simulator developed in Python 3.10 and executed on a laptop running Ubuntu 22.04 LTS, equipped with an Intel Core i7-11800H CPU @ 2.30 GHz, 32-GB RAM, and SSD storage. The simulation modelled underwater acoustic communication in a hierarchical tree topology with 10 to 200 nodes, spanning 2 to 5 depth levels. Nodes were connected via acoustic links with a nominal data rate of 10 kbps, reflecting typical underwater modem capabilities. Propagation delays were calculated based on node distances ranging from 100 to 1000 m, assuming a sound speed of 1500 m/s. The authentication messages consisted of standardized fields, including 64-bit identities, 64-bit nonces, 8-bit timestamps, 160-bit hash outputs, and 512-bit representations for ECC points or AES keys, as shown in Fig. 7.

B. Communication Costs Overhead

Each protocol's communication cost is obtained by summing the bit lengths of all fields transmitted during the login and authentication phases. The communication cost is computed based on the sizes of individual message components. In the analysis, it is assumed that the message fields conform to the parameters reported—64-bit identities, 64-bit nonces, 8-bit timestamps, 160-bit hash outputs, and 512-bit representations for ECC points or AES keys. Simulations with 10–200 nodes show that average authentication delay increases linearly with network depth but remains under acceptable thresholds due to hierarchical message aggregation.

The analysis presented in Table IV demonstrates that the proposed underwater authentication protocol offers superior efficiency. By reducing the total communication cost to 2112 bits, substantially lower than the 3008–3216 bits required by existing protocols, the proposed design is ideally suited for the constraints of UWC systems. Given typical underwater modem rates of ∼10 kbps, our 2112-bit total authentication exchange completes within ∼211 ms, showing a practical tradeoff between security and latency.

C. Computational Costs Comparison

The computational costs are derived by counting the number of cryptographic operations performed by each entity during the authentication process. Table V compares the computational costs (in milliseconds, ms) incurred in the proposed scheme with various existing studies. Let T_{exp}: Time for an exponentiation operation; T_{ecm}: Time for an elliptic curve multiplication operation; T_{eca}: Time for an auxiliary ECC; T_{ver}: Time for a verification operation; T_{h}: Time for a hash operation; T_{pair}: Time for a bilinear pairing operation, which is known to be computationally expensive; T_{enc}: Time for an encryption operation; T_{dec}: Time for a decryption operation; T_{EC}: Time for a general ECC, which in the proposed protocol is an optimized variant that effectively replaces multiple exponentiations.

Thus, the proposed protocol replaces expensive operations, such as pairings and multiple exponentiations with optimized ECC operations, symmetric encryption, and decryption, thereby reducing the overall computation cost significantly to 0.400 ms for UWS, BS and 0.500 ms for SUB, B, and SAT. The energy consumption for mutual authentication (UWS/SUB) remains under 0.07 mJ, which confirms the protocol's suitability for low-power, real-time operations in underwater nodes.

D. Energy Consumption Analysis

To assess the suitability of the proposed protocol for energy-constrained underwater environments, we provide an estimate of the energy consumption per authentication cycle. The calculation is based on power usage values of commonly used cryptographic operations on embedded devices, such as ARM Cortex-M4 and Cortex-A53 processors.

Based on literature benchmarks:

1) One ECC $\approx 24\ \mu$J
2) One hash operation (SHA-1/SHA-256) $\approx 6\ \mu$J
3) One encryption/decryption (AES-128) $\approx 3.2\ \mu$J

For a single entity (e.g., UWS), the authentication process includes:

1) 1 ECC operation
2) 2 hash operations
3) 2 encryption and 2 decryption operations

The total energy consumed per authentication cycle is calculated as

$$\begin{aligned} \text{ECC:} &\quad 24\ \mu\text{J} \\ \text{Hash:} &\quad 2 \times 6\ \mu\text{J} = 12\ \mu\text{J} \\ \text{AES:} &\quad 2 \times 3.2\ \mu\text{J} + 2 \times 3.2\ \mu\text{J} = 12.8\ \mu\text{J} \\ \textit{TotalEnergy}: &\quad 24 + 12 + 12.8 = 48.8\ \mu\text{J}\ (\approx 0.049\ \text{mJ}). \end{aligned}$$

This low energy footprint demonstrates the feasibility of our protocol for long-term use in underwater nodes powered

Authorized licensed use limited to: INDIAN INST OF INFO TECH AND MANAGEMENT. Downloaded on February 15,2026 at 13:05:22 UTC from IEEE Xplore. Restrictions apply.

TABLE IV
COMPARISON OF COMMUNICATION COSTS

Entity	[21]	[22]	[23]	[24]	[25]	Proposed
E_1	896 bits	1024 bits	960 bits	912 bits	1008 bits	640 bits
E_2	768 bits	832 bits	800 bits	784 bits	848 bits	512 bits
E_3	512 bits	512 bits	544 bits	512 bits	528 bits	320 bits
E_4	832 bits	832 bits	832 bits	832 bits	832 bits	640 bits
Total Cost	3008 bits	3200 bits	3136 bits	3040 bits	3216 bits	2112 bits

TABLE V
COMPARISON OF PRE-EXISTING COMPUTATIONAL COSTS

Reference	UWS/BS	SUB/B/SAT
[21]	$2T_{exp} + 5T_h \approx 0.536\ ms$	$3T_{exp} + 6T_h \approx 0.800\ ms$
[22]	$3T_{exp} + 4T_{ecm} + T_{eca} + 2T_{ver} \approx 19.707\ ms$	$4T_{ecm} + 5T_{ecm} + T_{eca} + 2T_{ver} \approx\ 25.000\ ms$
[23]	$3T_{ecm} + 2T_{pair} + T_{ver} + 5T_h \approx 75.883\ ms$	$4T_{ecm} + 2T_{pair} + T_{ver} + 6T_h \approx 90.000\ ms$
[24]	$T_{ecm} + 4T_h \approx 2.352\ ms$	$T_{ecm} + 5T_h \approx 2.900\ ms$
[25]	$T_{ecm} + 3T_h \approx 1.245\ ms$	$T_{ecm} + 4T_h \approx 1.600\ ms$
Proposed	$T_{EC} + 2T_h + 2T_{enc} + 2T_{dec} \approx 0.400\ ms$	$T_{EC} + 2T_h + 4T_{enc} + 4T_{dec} \approx 0.500\ ms$

by limited energy sources, such as batteries. The lightweight nature of our cryptographic scheme ensures both security and energy efficiency.

VII. CONCLUSION

The protocol addresses the unique constraints of underwater environments, including high latency, limited bandwidth, and dynamic topology. By integrating PEECC and one-way hash functions, the scheme enhances security while maintaining computational efficiency. The protocol was analyzed using the Scyther tool to validate its resistance against common cyber threats, such as replay attacks, eavesdropping, and impersonation. Performance evaluation demonstrated reduced authentication overhead compared to existing schemes, ensuring scalability and real-time applicability. Future work will focus on optimizing energy efficiency and extending the framework to hybrid UWC networks. Additionally, an energy analysis confirms that each authentication cycle consumes less than 0.05 mJ, validating the protocol's suitability for low-power underwater nodes during prolonged deployments. Future work will validate the protocol's suitability for long-term underwater missions, evaluate hybrid acoustic-optical network adaptability, and explore post-quantum cryptographic primitives to enhance long-term resilience.

REFERENCES

[1] N. Adam, M. Ali, F. Naeem, A. S. Ghazy, and G. Kaddoum, "State-of-the-art security schemes for the Internet of Underwater Things: A holistic survey," *IEEE Open J. Commun. Soc.*, vol. 5, pp. 6561–6592, 2024.

[2] K. M. Ahmed, R. Shams, F. H. Khan, and M.-A. Luque-Nieto, "Securing underwater wireless sensor networks: A review of attacks and mitigation techniques," *IEEE Access*, vol. 12, pp. 161096–161133, 2024.

[3] D. Rangwani and H. Om, "Chaotic map based multi-factor authentication protocol for underwater environment monitoring," *Multimedia Tools Appl.*, vol. 83, no. 9, pp. 26871–26900, 2024.

[4] A. M. Almuhaideb and D. M. Al-Khulaifi, "An efficient authentication and key agreement scheme for the Internet of Underwater Things (IoUT) environment," *IEEE Access*, vol. 12, pp. 175773–175789, 2024.

[5] J. Yan, X. Guan, X. Yang, C. Chen, and X. Luo, "A survey on integration design of localization, communication, and control for underwater acoustic sensor networks," *IEEE Internet Things J.*, vol. 12, no. 6, pp. 6300–6324, Mar. 2025.

[6] A. Phung, G. Billings, A. F. Daniele, M. R. Walter, and R. Camilli, "A shared autonomy system for precise and efficient remote underwater manipulation," *IEEE Trans. Robot.*, vol. 40, pp. 4147–4159, 2024.

[7] R. Ch, G. Srivastava, T. R. Gadekallu, P. K. R. Maddikunta, and S. Bhattacharya, "Security and privacy of UAV data using blockchain technology," *J. Inf. security Appl.*, vol. 55, Dec. 2020, Art. no. 102670.

[8] N. Saeed, A. Celik, T. Y. Al-Naffouri, and M.-S. Alouini, "Underwater optical wireless communications, networking, and localization: A survey," *Ad Hoc Netw.*, vol. 94, Nov. 2019, Art. no. 101935.

[9] S. A. Ali and F. Amin, "Comparative study of US-China cyber strategy and its impact on the indo-pacific region," *Qlantic J. Soc. Sci. Human.*, vol. 6, no. 2, pp. 144–157, 2025.

[10] A. Shenbagharaman and B. Paramasivan, "Secure and energy efficient routing protocol for underwater wireless sensor network using running city game optimization with XGBoost algorithm," *Appl. Soft Comput.*, vol. 169, Jan. 2025, Art. no. 112615.

[11] S. Tomović, B. Krivokapic, and I. Radusinovic, "CNN-based physical layer authentication method for underwater acoustic sensor networks," in *Proc. 32nd Telecommun. Forum (TELFOR)*, 2024, pp. 1–4.

[12] A. Vasudeva and M. Sood, "Survey on sybil attack defense mechanisms in wireless ad hoc networks," *J. Netw. Comput. Appl.*, vol. 120, pp. 78–118, Oct. 2018.

[13] Z. A. Zukarnain, O. A. Amodu, C. Wenting, and U. A. Bukar, "A survey of sybil attack countermeasures in underwater sensor and acoustic networks," *IEEE Access*, vol. 11, pp. 64518–64543, 2023.

[14] M. Khalid, R. Zhao, and N. Ahmed, "Physical layer authentication in line-of-sight underwater acoustic sensor networks," in *Proc. Global Oceans, Singapore–US Gulf Coast*, 2020, pp. 1–5.

[15] C. Peng, X. Du, K. Li, and M. Li, "An ultra-lightweight encryption scheme in underwater acoustic networks," *J. Sensors*, vol. 2016, no. 1, 2016, Art. no. 8763528, doi: 10.1155/2016/8763528.

[16] J. Shi et al., "A lightweight secure scheme for underwater wireless acoustic network," *J. Mar. Sci. Eng.*, vol. 12, no. 5, p. 831, 2024.

[17] R. Diamant, S. Tomasin, F. Ardizzon, D. Eccher, and P. Casari, "Secret key generation from route propagation delays for underwater acoustic networks," *IEEE Trans. Inf. Forensics Security*, vol. 18, pp. 3318–3333, 2023.

[18] D. Jayakumari, C. Rupa, and V. Nikhila, "Pentatope based elliptic curve encryption for privacy and protection of multimedia data," in *Proc. Int. Conf. Autom., Signal Process., Instrum. Control*, 2020, pp. 551–560.

[19] M. Manickam and G. G. Devarajan, "An improved three factor authentication protocol for wireless body area networks," *Cyber Secur. Appl.*, vol. 3, Dec. 2025, Art. no. 100062.

[20] R. B. Ponnuru, S. A. Kumar, M. Azab, and G. R. Alavalapati, "BAAP-FIoT: Blockchain-assisted authentication protocol for fog-enabled Internet of Things environment," *IEEE Internet Things J.*, vol. 12, no. 11, pp. 15681–15696, Jun. 2025.

[21] B. Z. Téglásy, E. Wengle, J. R. Potter, and S. Katsikas, "Authentication of underwater assets," *Comput. Netw.*, vol. 241, Mar. 2024, Art. no. 110191.

Authorized licensed use limited to: INDIAN INST OF INFO TECH AND MANAGEMENT. Downloaded on February 15,2026 at 13:05:22 UTC from IEEE Xplore. Restrictions apply.

[22] Q. Xie and Y. Yao, "PUF and chaotic map-based authentication protocol for underwater acoustic networks," *Appl. Sci.*, vol. 14, no. 13, p. 5400, 2024.

[23] C.-W. Yun, J.-H. Lee, O. Yi, and S.-H. Park, "Ticket-based authentication protocol for underwater wireless sensor network," in *Proc. 8th Int. Conf. Ubiquitous Future Netw. (ICUFN)*, 2016, pp. 215–217.

[24] P. Casari, F. Ardizzon, and S. Tomasin, "Physical layer authentication in underwater acoustic networks with mobile devices," in *Proc. 16th Int. Conf. Underwater Netw. Syst.*, 2022, pp. 1–8.

[25] A. Al Guqhaiman, O. Akanbi, A. Aljaedi, and C. E. Chow, "Lightweight multi-factor authentication for underwater wireless sensor networks," in *Proc. Int. Conf. Comput. Sci. Comput. Intell. (CSCI)*, 2020, pp. 188–194.

[26] P. R. Babu, S. A. Kumar, A. G. Reddy, and A. K. Das, "Quantum secure authentication and key agreement protocols for IoT-enabled applications: A comprehensive survey and open challenges," *Comput. Sci. Rev.*, vol. 54, Nov. 2024, Art. no. 100676.

[27] S. K. Dwivedi, R. Amin, and S. Vollala, "Design of secured blockchain based decentralized authentication protocol for sensor networks with auditing and accountability," *Comput. Commun.*, vol. 197, pp. 124–140, Jan. 2023.

[28] T. B. D. Cunha and K. Manjappa, "Private and consortium blockchain-based authentication protocol for IoT devices using PUF," *J. Commun. Netw.*, vol. 26, no. 2, pp. 166–181, 2024.

[29] A. Q. Abd Alhasan, M. F. Rohani, and M. S. Abu-Ali, "Ultra-lightweight mutual authentication protocol to prevent replay attacks for low-cost RFID tags," *IEEE Access*, vol. 12, pp. 50925–50934, 2024.

[30] M. Shariq et al., "Design of provably secure and lightweight authentication protocol for unmanned aerial vehicle systems," *Comput. Commun.*, vol. 228, Dec. 2024, Art. no. 107971.

[31] G. S. Varshitha, R. Ch, D. Divya, T. R. Gadekallu, and G. Srivastava, "A survey of authentication protocols for enhancing security in underwater communication systems," in *Proc. IEEE 34th Wireless Opt. Commun. Conf. (WOCC)*, 2025, pp. 112–116.

Authorized licensed use limited to: INDIAN INST OF INFO TECH AND MANAGEMENT. Downloaded on February 15,2026 at 13:05:22 UTC from IEEE Xplore. Restrictions apply.