RESIDENCE INN BY MARRIOTT

NW CORNER OF PINE & MEMORIAL, TULSA, OK

Sheet List	
Sheet Number	Sheet Name
S100	COVER PAGE
S101	STRUCTURAL NOTES
S102	STRUCTURAL NOTES
S103	STRUCTURAL NOTES
S104	STRUCTURAL NOTES
S105	STRUCTURAL NOTES
S106	FOUNDATION PLAN
S107	FIRST FLOOR WALL LAYOUT PLAN
S108	FIRST FLOOR SHEAR WALL LAYOUT PLAN
S109	SECOND FLOOR FRAMING LAYOUT PLAN
S110	SECOND FLOOR WALL LAYOUT PLAN
S111	SECOND FLOOR SHEAR WALL LAYOUT PLAN
S112	THIRD FLOOR FRAMING LAYOUT PLAN
S113	THIRD FLOOR WALL LAYOUT PLAN
S114	THIRD FLOOR SHEAR WALL LAYOUT PLAN
S115	FOURTH FLOOR FRAMING LAYOUT PLAN
S116	FOURTH FLOOR WALL LAYOUT PLAN
S117	FOURTH FLOOR SHEAR WALL LAYOUT PLAN
S118	ROOF FRAMING LAYOUT PLAN
S119	PARAPET LEVEL FRAMING PLAN
S120	HEAD ROOM TOP ROOF FRAMING LAYOUT PLAN
S121	FIRST FLOOR HRS PLAN
S122	TYPICAL FLOOR HRS PLAN
S123	HEADROOM/TOP ROOF HRS PLAN
S130	LOADING PLAN.
S140	BUILDING SECTION 1
S141	BUILDING SECTION 2
S142	BUILDING SECTION 3
S143	DETAILS
S144	DETAILS
S145	DETAILS
S146	DETAILS
S147	DETAILS
S148	DETAILS

ZONING INFORMATION:

OWNER:	HI-TECH HOSPITALITY
ADDRESS:	RESIDENCE INN BY MARRIOTT NW CORNER OF PINE & MEMORIAL, TULSA, OK
PARCEL RECORD:	SEE CIVIL DRAWINGS
MUNICIPAL ZONE:	OKLAHOMA
LOT USE:	4-STORY PUBLIC RESIDENCE AND COMMERCIAL
LOT TYPE:	(WOOD FRAME)

GOVERNING CODES

a. INTERNATIONAL BUILDING CODE - 2018 (IBC 2018)

b. ASCE 7-16 MINIMUM DESIGN LOADS FOR BUILDINGS AND OTHER STRUCTURES

c. ACI 318-19 BUILDING CODE REQUIREMENTS FOR STRUCTURAL CONCRETE AND COMMENTARY

d. TMS 402-2016 BUILDING CODE REQUIREMENTS AND SPECIFICATIONS FOR MASONRY STRUCTURES

e. AISC 15TH EDITION (360-16) ASD- MANUAL OF STEEL CONSTRUCTION LOAD & RESISTANCE FACTOR DESIGN

f. NDS 2018 NATIONAL DESIGN SPECIFICATION FOR WOOD CONSTRUCTION ALLOWABLE STRESS DESIGN

g. STEEL DECK INSTITUTE DIAPHRAGM DESIGN MANUAL SECOND EDITION

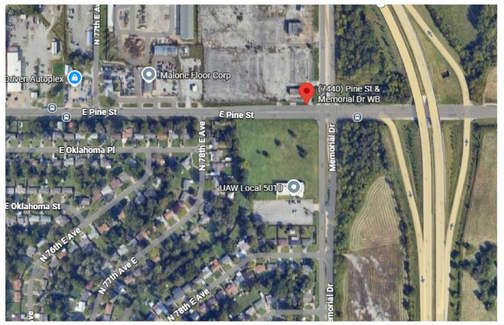

VICINITY MAP

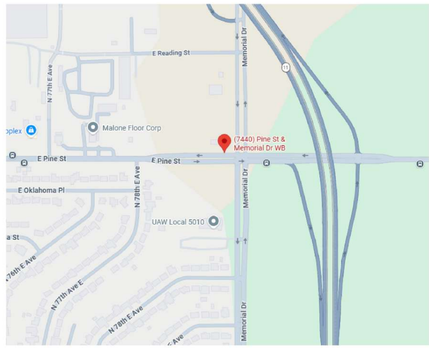

LOCATION MAP

NOTE: THE LOCATION OF EXISTING UNDERGROUND UTILITIES,SUCH AS WATER MAINS,SEWERS,GASLINES,ETC., AS SHOWN ON THE PLANS,HAS BEEN DETERMINED FROM THE BEST AVAILABLE INFORMATION AND IS GIVEN FOR THE CONVENIENCE OF THE CONTRACTOR. HOWEVER ,THE OWNER AN THE ENGINEER DO NOT ASSUME RESPONSIBILITY IN THE EVENT THAT DURING CONSTRUCTION,UTLITIES OTHER THAN THOSE SHOWN MAY BE ENCOUNTERED.AND THAT THE ACTUALLOCATION OF THOSE WHICH ARE SHOWN MAY BE DIFFERENT FROM THE LOCATION AS SHOWN ON THE PLANS.

JS
ARCHITECTS
9726 E. 42nd St. Suite 153, Tulsa, 74146
918 640 6800 - jhnsanford@sbl.com
COPYRIGHT 2026 John Sanford

6-08-2026

NOT VALID FOR CONSTRUCTION UNLESS SIGNED IN THIS BLOCK

DEVELOPED BY
HI-TECH HOSPITALITY
Residence INN BY MARRIOTT

RESIDENCE INN BY MARRIOTT

NW CORNER OF PINE & MEMORIAL, TULSA, OK

THESE DRAWINGS ARE INTENDED FOR REVIEW AND PERMITTING. DRAWINGS ARE NOT TO BE USED FOR CONSTRUCTION WITHOUT ARCHITECT'S AND ENGINEER'S SIGNATURE AND THEIR DATE OF ISSUE FOR CONSTRUCTION.

TULSA AIRPORT RIBM
61208
Project Number

No.	Description	Date

SHEET
S100
COVER PAGE

STRUCTURAL NOTES SPECIFICATIONS AND DESIGN CRITERIA:

1. DEAD LOADS:

TOTAL ROOF DEAD LOAD = 20 psf
FLOOR DEAD LOAD = 25 psf

EXTERNAL WALL

TOTAL WALL DEAD LOAD = 20 psf

INTERNAL WALL

TOTAL WALL DEAD LOAD = 20 psf

2. LIVE LOAD

THE FOLLOWING LIVE LOADS ARE REFERRED TO ALL BUILDINGS (WHERE APPLICABLE):

LIVE LOAD ROOF = 20 psf (ASCE7-16TABLE 4.3-1)
LIVE LOAD FLOOR = 40 PSF (ASCE7-16 TABLE 4.3-1)
LIVE LOAD ASSEMBLY AREA FLOOR = 100 PSF (ASCE7-16 TABLE 4.3-1)
LIVE LOAD STAGE = 150 PSF (ASCE7-16 TABLE 4.3-1)
LIVE LOAD CORRIDOR = 100 PSF (ASCE7-16 TABLE 4.3-1)
LIVE LOAD STAIRCASE = 60 PSF (ASCE7-16 TABLE 4.3-1)

SNOW LOAD:

SNOW LOAD SUMMARY:

GROUND SNOW LOAD = 10 psf
ROOF SNOW LOAD = 11.3 psf
ACCUMULATION ROOF SNOW LOAD = 45.9 psf

WIND LOAD

BUILDING DATA
TYPE OF ROOF; FLAT
LENGTH OF BUILDING; B = 338'- 0"
WIDTH OF BUILDING; D = 71'-6"
BUILDING HEIGHT = 53'-0"

GENERAL WIND LOAD REQUIREMENTS

BASIC WIND SPEED; V = 108 MPH

RISK CATEGORY; = II

VELOCITY PRESSURE EXPONENT
COEF (TABLE 26.6-1); KD = 0.85

GROUND ELEVATION FACTOR;
KE = EXP(-0.0000362 ZGL/1FT) = 1.00

EXPOSURE CATEGORY (CL 26.7.3); B

ENCLOSURE CLASSIFICATION (CL.26.12); = ENCLOSED BUILDINGS

INTERNAL PRESSURE COEF
+VE (TABLE 26.13-1);GCPI_P = 0.18

INTERNAL PRESSURE COEF
–VE (TABLE 26.13-1); GCPI_N = -0.18

COMPONENT AND CLADDING DESIGN ANALYSIS:

WALL DESIGN WIND PRESSURE INTERIOR = 23.2 psf
WALL DESIGN WIND PRESSURE CORNER = 28 psf

MWFRS DESIGN ANALYSIS:

WALL DESIGN WIND PRESSURE = 21.88 psf

EARTHQUAKE LOAD

THE FOLLOWING SEISMIC LOAD DESIGN PARAMETERS HAVE BEEN UTILIZED:

ANALYSIS PROCEDURE -EQUIVALENT STATIC METHOD:

SITE PARAMETERS

SITE CLASS; D, SOIL PROPERTIES NOT KNOWN
MAPPED ACCELERATION PARAMETERS (SECTION 11.4.2)
AT SHORT PERIOD; SS = 0.128
AT 1 SEC PERIOD; S1 = 0.072
SITE COEFFICIENT AT SHORT PERIOD (TABLE 11.4-1); FA = 1.600
AT 1 SEC PERIOD (TABLE 11.4-2); FV = 2.400
SPECTRAL RESPONSE ACCELERATION PARAMETERS
AT SHORT PERIOD (EQ. 11.4-1); SMS = FA X SS = 0.205
AT 1 SEC PERIOD (EQ. 11.4-2); SM1 = FVX S1 = 0.173
DESIGN SPECTRAL ACCELERATION PARAMETERS (SECT 11.4.4)
AT SHORT PERIOD (EQ. 11.4-3); SDS = 2 / 3 X SMS = 0.137
AT 1 SEC PERIOD (EQ. 11.4-4); SD1 = 2 / 3 X SM1 = 0.116

3.SEISMIC DESIGN CATEGORY

OCCUPANCY CATEGORY; = II
SEISMIC DESIGN CATEGORY (TABLE 11.6-1 ONLY); B
SEISMIC BASE SHEAR (SECT 11.7)

4. GOVERNING CODES

a. INTERNATIONAL BUILDING CODE - 2018 (IBC 2018)
b. ASCE 7-16 MINIMUM DESIGN LOADS FOR BUILDINGS AND OTHER STRUCTURES
c. ACI 318-19 BUILDING CODE REQUIREMENTS FOR STRUCTURAL CONCRETE AND COMMENTARY
d. AISC MANUAL OF STEEL CONSTRUCTION 13TH EDITION
e. NDS 2018 NATIONAL DESIGN SPECIFICATION FOR WOOD CONSTRUCTION ALLOWABLE STRESS DESIGN
f. OKLAHOMA RESIDENTIAL CODE 2018

5. LIST OF APPROVAL LETTERS AND ITEMS WHICH WILL BE DESIGNED AND SUBMITTED BY DELEGATED ENGINEERS:

a. POOL BEING CURRENTLY DESIGN BY VENDOR.
b. ROOF AND FLOOR TRUSSES DESIGN.
(NOTE: FOR ITEMS a, b : DEFERRED-TO BE SUBMITTED TO EOR FOR APPROVAL AND BACK TO CITY AFTER PERMIT HAS BEEN SECURED)

6. CONTRACTOR RESPONSIBILITIES

a. CONTRACTOR SHALL OBTAIN LATEST SET OF DRAWINGS INCLUDING ANY REVISIONS BEFORE STARTING CONSTRUCTION.
b. IT IS ASSUMED THAT THE CONTRACTOR HAS READ AND UNDERSTANDS THE NOTES AND DESIGN INTENT CONTAINED HERE IN.
c. THE CONTRACTOR SHALL REVIEW DRAWINGS IN THEIR ENTIRETY BEFORE STARTING WORK.
d. THE CONTRACTOR SHALL ACCEPT FULL RESPONSIBILITY FOR ANY ERRORS OR OMISSIONS NOT REPORTED IMMEDIATELY IN WRITING TO THIS ENGINEER.
e. CONTRACTORS WHO DISCOVER DISCREPANCIES, OMISSIONS OR VARIATIONS IN THE CONTRACT DOCUMENTS DURING BIDDING SHALL IMMEDIATELY NOTIFY THE SEOR. THE SEOR WILL RESOLVE THE CONDITION AND ISSUE A WRITTEN CLARIFICATION.
f. ANY DISCREPANCIES SHALL BE BROUGHT TO THE ATTENTION OF THE STRUCTURAL ENGINEER IN WRITING PRIOR TO PROCEEDING WITH THE AFFECTED PART OF THE WORK.
g. BRAND FRANCHISE STANDARDS SHOULD BE CONSIDERED PART OF CONSTRUCTION DOCUMENTS. IT IS THE RESPONSIBILITY OF THE GENERAL CONTRACTOR TO SECURE THE APPROPRIATE DOCUMENTS AND CONSIDERED THEIR IMPACT ON CONSTRUCTION PRIOR TO BIDDING.
h. THE FRANCHISE BRAND STANDARDS DESIGN DOCUMENT SHALL BE CONSIDER AS AN INTEGRAL PART OF THE CONSTRUCTION DOCUMENTS. ALL CONTRACTORS SHALL ENSURE THEY OBTAIN, READ AND FAMILIARIZE THEMSELVES WITH THE BRAND STANDARD DOCUMENT BEFORE BIDDING AND ALSO THROUGHOUT THE CONSTRUCTION STAGES. IF THERE ARE ANY DISCREPANCIES BETWEEN THE CONSTRUCTION DOCUMENTS AND THE FRANCHISE BRAND STANDARDS. THE CONTRACTOR SHALL ISSUE AN RFI TO THE AOR AND EOR.
i. THE GENERAL CONTRACTOR SHALL COORDINATE ALL CONTRACT DOCUMENTS WITH FIELD CONDITIONS/DIMENSIONS PROJECT SHOP DRAWINGS PRIOR TO CONSTRUCTION.
j. THE CONTRACTOR IS SOLELY RESPONSIBLE FOR CONSTRUCTION MEANS AND METHODS AND JOBSITE SAFETY INCLUDING ALL OSHA REQUIREMENTS.
k. THE CONTRACTOR SHALL PROTECT ADJACENT PROPERTY, HIS OWN WORK AND THE PUBLIC FROM HARM.
l. IT IS THE CONTRACTOR'S RESPONSIBILITY TO DETERMINE ERECTION PROCEDURES AND SEQUENCES TO INSURE SAFETY OF THE BUILDING AND ITS COMPONENTS DURING ERECTION. THIS WORK INCLUDES THE ADDITION OF NECESSARY SHORING, SHEETING, TEMPORARY BRACING, GUYS OR TIE DOWNS. WHEREVER THE CONTRACTOR IS UNSURE OF THESE REQUIREMENTS,THE CONTRACTOR SHALL RETAIN A QUALIFIED STATE LICENSED PROFESSIONAL ENGINEER TO DESIGN AND INSPECT THE TEMPORARY BRACING AND STABILITY OF THE STRUCTURE.
m. THE STRUCTURE IS DESIGNED TO BE SELF SUPPORTING AND STABLE AFTER THE BUILDING IS COMPLETE. PRIOR TO COMPLETION, THE RESPONSIBILITY FOR STABILITY AND TEMPORARY BRACING IS THE RESPONSIBILITY OF THE CONTRACTOR.
n. THE CONTRACTOR SHALL SUPPLEMENT THE MINIMUM REQUIRED FOUNDATION AND SITE PREPARATION REQUIREMENTS (INCLUDING SLAB-ON-GRADE THICKNESS) TO HANDLE CONSTRUCTION LOADS.
o. THE GENERAL CONTRACTOR SHALL BE SOLELY RESPONSIBLE FOR ALL EXCAVATION AND SHORING PROCEDURES AND PROTECTION OF ADJACENT PROPERTY, STREETS AND UTILITIES IN ACCORDANCE WITH LOCAL BUILDING DEPARTMENT.
p. WHEN PERFORMING WORK BELOW GRADE, CARE SHALL BE TAKEN TO AVOID DAMAGING ANY EXISTING UTILITIES.
q. ALL UNKNOWN UTILITIES DISCOVERED DURING CONSTRUCTION SHALL BE BROUGHT TO THE ATTENTION OF THE ARCHITECT. ANY DAMAGE TO THE EXISTING UTILITIES SHALL BE IMMEDIATELY REPORTED TO ALL AFFECTED PARTIES INCLUDING THE ARCHITECT.

7. SHOP DRAWINGS AND OTHER SUBMITTALS

a. CONSULT WITH THE DESIGN PROFESSIONAL CONTRACT FOR SUBMITTALS TO BE REVIEWED. ITEMS NOT SPECIFICALLY INCLUDED IN SAID CONTRACT WILL NOT BE REVIEWED.
b. THE STRUCTURAL FRAMING SHOWN IS SCHEMATIC IN NATURE. THE SUPPORTING STRUCTURE HAS BEEN DESIGNED UNDER THE ASSUMPTION THAT THE FRAMING SCHEME SHOWN WILL CLOSELY PARALLEL FINAL SUPERSTRUCTURE LAYOUT.
c. THE CONTRACTOR SHALL PROVIDE SIGNED AND SEALED SHOP DRAWINGS AND CALCULATIONS (PREPARED BY A QUALIFIED STATE LICENSED PROFESSIONAL ENGINEER) FOR APPROVAL PRIOR TO RELEASE FOR FABRICATION.
d. THE REVIEW OF SHOP DRAWINGS IS REQUIRED AS THE ENGINEER CHECKS BEAM, WALL, COLUMN AND FOOTING CAPACITIES AGAINST KNOWN LOADING. FAILURE TO PROVIDE SHOP DRAWINGS PRIOR TO FABRICATION OR CONSTRUCTION OF SUPPORTING ELEMENTS MAY RESULT IN ADDITIONAL ENGINEERING COSTS DURING CONSTRUCTION.
e. THE CONTRACTOR SHALL SUPPLY THE ENGINEER WITH DIGITAL COPIES OF THE COMPLETE SHOP DRAWING AND CALCULATION SUBMITTAL WITH THE UNDERSTANDING THAT UP TO (5) BUSINESS DAYS ARE NECESSARY FOR THE REVIEW PERIOD.
f. SUBMIT SPECIFIC COMPONENTS, SUCH AS COLUMNS, FOOTINGS, ETC., IN A SINGLE PACKAGE. SUBMIT SIMILAR FLOORS TOGETHER
g. ON THE FIRST SUBMITTAL, CLEARLY FLAG AND CLOUD ALL DIFFERENCES FROM THE CONTRACT DOCUMENTS
h. ON RESUBMITTALS, FLAG AND CLOUD ALL CHANGES AND ADDITIONS TO PREVIOUS SUBMITTAL;ONLY CLOUDED ITEMS WILL BE REVIEWED.
i. SUBMITTALS FOR SPECIAL STRUCTURAL LOAD-CARRYING ITEMS THAT ARE REQUIRED BY CODES OR STANDARDS TO RESIST FORCES MUST BE PREPARED BY, OR UNDER THE DIRECT SUPERVISION OF A DELEGATED QUALIFIED STATE LICENSED PROFESSIONAL ENGINEER. EXAMPLES INCLUDE PRE-ENGINEERED ROOF AND FLOOR TRUSSES, PRECAST CONCRETE, OPEN WEB STEEL JOISTS,EXTERIOR ENCLOSURE SYSTEMS AND SHORING AND RESHORING.
j. A DELEGATED ENGINEER IS DEFINED AS A QUALIFIED STATE LICENSED PROFESSIONAL ENGINEER WHO SPECIALIZES IN AND UNDERTAKES THE DESIGN OF STRUCTURAL COMPONENTS OR STRUCTURAL SYSTEMS INCLUDED IN A SPECIFIC SUBMITTAL PREPARED FOR THIS PROJECT AND IS AN EMPLOYEE OR OFFICER OF OR CONSULTANT TO THE CONTRACTOR OR FABRICATOR RESPONSIBLE FOR THE SUBMITTAL. THE DELEGATED ENGINEER SHALL SIGN, SEAL AND DATE THE SUBMITTAL, INCLUDING CALCULATIONS AND DRAWINGS.
k. THE TRADE CONTRACTOR IS RESPONSIBLE FOR CONFIRMING AND CORRELATING DIMENSIONS AT THE JOB SITES, FOR TOLERANCES, CLEARANCES, QUANTITIES, FABRICATION PROCESSES AND TECHNIQUES OF CONSTRUCTION, COORDINATION OF THE WORK WITH OTHER TRADES AND FULL COMPLIANCE WITH THE CONTRACT DOCUMENTS.
l. THE GENERAL CONTRACTOR/CONSTRUCTION MANAGER SHALL REVIEW AND APPROVE SUBMITTALS AND SHALL SIGN AND DATE EACH DRAWING PRIOR TO SUBMITTING TO THE SEOR. THIS APPROVAL IS TO CONFIRM THAT THE SUBMITTAL IS COMPLETE, COMPLIES WITH THE SUBMITTAL REQUIREMENTS AND IS COORDINATED WITH FIELD DIMENSIONS, OTHER TRADE ERECTION SEQUENCING AND CONSTRUCTIBILITY.
m. THE STRUCTURAL ENGINEER REVIEWS SUBMITTALS TO CONFIRM THAT THE SUBMITTAL IS IN GENERAL CONFORMANCE WITH THE DESIGN CONCEPT PRESENTED IN THE CONTRACT DOCUMENTS. QUANTITIES AND DIMENSIONS ARE NOT CHECK NOTATIONS ON SUBMITTALS DO NOT AUTHORIZE CHANGES TO THE CONTRACT SUM. CHECKING OF THE SUBMITTAL BY THE STRUCTURAL ENGINEER SHALL NOT RELIEVE THE CONTRACTOR OF RESPONSIBILITY FOR DEVIATIONS FROM THE CONTRACT DOCUMENTS AND FROM ERROR OR OMISSIONS IN THE SUBMITTAL.
n. IN ADDITION TO THE ABOVE, THE STRUCTURAL ENGINEER'S REVIEW OF THE DELEGATED ENGINEER SUBMITTALS IS LIMITED TO VERIFYING THAT THE SPECIFIED STRUCTURAL SUBMITTAL HAS BEEN FURNISHED, SIGNED AND SEALED BY THE DELEGATED ENGINEER AND THAT THE DELEGATED ENGINEER HAS UNDERSTOOD THE DESIGN INTENT AND USED THE SPECIFIED STRUCTURAL CRITERIA AND SOUND ENGINEERING JUDGEMENT IN PREPARATION OF THE SUBMITTAL.NO DETAILED CHECK OF CALCULATIONS WILL BE MADE. THE DELEGATED ENGINEER IS SOLELY RESPONSIBLE FOR HIS/HER DESIGN,INCLUDING BUT NOT LIMITED TO THE ACCURACY OF HIS/HER CALCULATIONS AND COMPLIANCE WITH THE APPLICABLE CODES AND STANDARDS.
o. THE USE OF DIGITAL FILES OR COPIES OF THE STRUCTURAL DRAWINGS SHALL NOT IN ANY WAY RELIEVE THE CONTRACTOR'S RESPONSIBILITY FOR PROPER CHECKING AND COORDINATION OF DIMENSIONS, DETAILS, SIZES AND QUANTITIES OF MATERIALS AS REQUIRED FOR THE PREPARATION OF COMPLETE AND ACCURATE SHOP DRAWINGS.
p. THE CONTRACTOR SHALL REVISE REFERENCES TO CONTRACT DOCUMENT SHEET NUMBERS AND SECTION MARKS AND SHALL REMOVE INFORMATION THAT IS NOT REQUIRED FOR THEIR WORK FROM THE DIGITAL FILES OR COPIES OF THE STRUCTURAL DRAWINGS, INCLUDING THE TITLE BLOCK.

8. EXCAVATION AND BACKFILL

a. THE CONTRACTOR IS SOLELY RESPONSIBLE FOR ALL EXCAVATION PROCEDURES INCLUDING LAGGING, SHORING, AND PROTECTION OF ADJACENT PROPERTY, STRUCTURES, STREETS AND UTILITIES IN ACCORDANCE WITH THE REQUIREMENTS OF THE LOCAL BUILDING DEPARTMENT AND OSHA REGULATIONS.
b. DO NOT EXCAVATE WITHIN ONE FOOT OF THE ANGLE OF REPOSE OF ANY SOIL BEARING FOUNDATION UNLESS THE FOUNDATION IS PROPERLY PROTECTED AGAINST SETTLEMENT.
c. DO NOT BACKFILL AGAINST ANY FOUNDATION WALL UNTIL 7 DAYS AFTER THE WALLS ARE BRACED BY THE STRUCTURE OR ARE TEMPORARILY BRACED.
d. DO NOT BACKFILL CANTILEVERED RETAINING WALLS UNTIL CONCRETE REACHES 75% OF THE SPECIFIED 28 DAY STRENGTH.
e. DO NOT BACKFILL UNTIL COMPLETION OF INSTALLATION AND INSPECTION OF ANY WATERPROOFING.

9. VAPOR BARRIER

a. WATERPROOF MEMBRANES (OVERLAPPED 6" AT JOINTS) WITH A PERMEANCE OF LESS THAN 0.1 PERMS IN ACCORDANCE WITH ASTM E-96 AND ASTM E 1745 SHALL BE PROVIDED UNDER INTERIOR SLABS.
b. NO FREE WATER STANDING ON EITHER THE SUB GRADE OR ANY MUDDY OR SOFT SPOT IS ALLOWED.
c. ANY STRUCTURAL MEMBER PENETRATING SLAB ON GRADE IS TO BE ISOLATED WITH 1/2" THICK PREMOLDED JOIN FILLER COMPLYING WITH ASTM D-1752, TYPE 1.
d. FOR INTERIOR SLABS PLACE 10 MIL POLYETHYLENE SHEETING BETWEEN SOIL AND BOTTOM OF SLAB. SHEETING IS NOT REQUIRED BELOW EXTERIOR CONCRETE SLABS.

10.SLABS ON GRADE

a. REFER TO GEO TECHNICAL REPORT FOR SUB GRADE PREPARATION MORE THAN 12" BELOW THE BOTTOM OF THE SLAB.
b. ABOVE SUB GRADE, USE FILL CONTAINING NOT MORE THAN 10% PASSING 200 SIEVE AND MAXIMUM 1INCH DIAMETER.
c. FILL SHALL BE COMPACTED TO 95% OF MAXIMUM DRY DENSITY AS DETERMINED BY MODIFIED PROCTOR ASTM D-1557.
d. EACH LAYER OF FILL SHALL NOT EXCEED 6" LOOSE THICKNESS. COMPACT PRIOR TO PLACEMENT OF THE NEXT LAYER. FILL PLACEMENT AND COMPACTION SHALL BE MONITORED AND ACCEPTED BY THE TESTING AGENCY.
e. TAKE A MINIMUM OF ONE FIELD DENSITY TEST (ASTM D-1556 OR D-2922) FOR EACH 2,500 SQUARE FEET OF EACH LAYER. THE TESTING AGENCY SHALL RANDOMLY SELECT TEST LOCATIONS.
f. USE 4" THICK SLABS ON GRADE REINFORCED WITH 6 X 6 / 10 X 10 WELDED WIRE MESH, SUPPLIED IN FLAT SHEETS ONLY. USE CHAIRS TO SUPPORT WIRE FABRIC IN THE CENTER OF SLAB.
h. PLACE CONCRETE IN LONG-STRIP CONSTRUCTION METHOD. PROVIDE CRACK CONTROL JOINTS AT 15 FEET MAXIMUM TO LIMIT AREAS BETWEEN JOINTS TO 100 SQ. FT. IN ALL FLOATING SLABS ON GRADE. LOCATE TO CONFORM TO BAY SPACING WHENEVER POSSIBLE, ADD CRACK CONTROL JOINTS AT RE-ENTRANT CORNERS WHICH TEND TO INVITE CRACKS.
i. IN SIDEWALKS AND WALKWAYS, LOCATE ISOLATION JOINTS AT 20 FT.O.C. MAXIMUM SCORE AND TOOL BETWEEN ISOLATION JOINTS IN EQUAL BAYS OF 5 FT. OR LESS.
j. SEE THE ARCHITECTURAL DRAWINGS FOR SLAB ON GRADE DEPRESSIONS AND OTHER REQUIREMENTS.

11.CONTRACTION, EXPANSION AND CONSTRUCTION JOINTS

a. ALL JOINT PLANS ARE CONSIDERED MEANS AND METHODS AND THE CONTRACTOR SHALL SUBMIT JOINT PLANS TO THE SEOR FOR APPROVAL.
b. CONTRACTION JOINTS (ALSO KNOWN AS CONTROL JOINTS) ARE INTENDED TO CREATE WEAKENED PLANES IN THE CONCRETE AND REGULATE THE LOCATION OF CRACKS.
c. THE MAXIMUM JOINT SPACING SHOULD BE 24 TO 36 TIMES THE THICKNESS OF THE SLAB NOT EXCEEDING15 FEET.
d. ALL PANELS SHOULD BE SQUARE OR NEARLY SQUARE. THE LENGTH SHOULD NOT EXCEED 1.5 TIMES THE WIDTH. AVOID L-SHAPED PANELS.
e. FOR CONTRACTION JOINTS, THE JOINT GROOVE SHOULD HAVE A MINIMUM DEPTH OF 1/4 THE THICKNESS OF THE SLAB, BUT NOT LESS THAN 1INCH.
f. CONVENTIONAL SAW-CUT JOINTS SHOULD BE RUN WITHIN 4 TO 12 HOURS AFTER THE CONCRETE HAS BEEN FINISHED.
g. EXPANSION JOINTS (ALSO KNOWN AS ISOLATION JOINTS) SEPARATE SLABS FROM OTHER PARTS OF THE STRUCTURE.
h. USE PRE-MOLDED JOINT FILLER FOR ISOLATION JOINTS TO SEPARATE SLABS FROM BUILDING WALLS OR FOOTINGS.
i. TO ISOLATE COLUMNS FROM SLABS, FORM CIRCULAR OR SQUARE RECESS. DO NOT FILL RECESSES UNTIL AFTER THE FLOOR HAS HARDENED.
j. CONSTRUCTION JOINTS (ALSO KNOWN AS COLD JOINTS) ARE SURFACES WHERE TWO SUCCESSIVE PLACEMENTS OF CONCRETE MEET.
k. CONSTRUCTION JOINTS ARE NOT PERMITTED UNLESS THE DETAIL HAS BEEN APPROVED BY THE SEOR.

12.REINFORCED CONCRETE

a. CONCRETE DESIGN HAS BEEN PERFORMED IN ACCORDANCE WITH ACI 318 BUILDING CODE REQUIREMENTS FOR STRUCTURAL CONCRETE.
b. CONCRETE CONSTRUCTION TECHNIQUES SHALL CONFORM TO THE "SPECIFICATIONS FOR STRUCTURAL CONCRETE FOR BUILDINGS" (ACI 301).
c. WHEN APPLICABLE (INCLUDED IN THE DESIGN CONTRACT), CONTRACTOR SHALL SUBMIT PROPOSED MIX DESIGNS, WITH HISTORICAL STRENGTH DATA FOR EACH SEPARATE MIX PRIOR TO CONCRETE PLACEMENT.
d. CONCRETE SHALL COMPLY WITH ALL THE REQUIREMENTS OF ACI 301 AND ASTM C-94 FOR MEASURING, MIXING, TRANSPORTING, ETC.

13.REINFORCING STEEL

a. REBAR SHALL BE ASTM A615 GRADE 60 DEFORMED BARS, FREE FROM OIL, SCALE AND RUST AND PLACED IN ACCORDANCE WITH THE TYPICAL BENDING DIAGRAM AND PLACING DETAILS OF THE ACI STANDARDS AND SPECIFICATIONS.
b. WHEN APPLICABLE (INCLUDED IN THE DESIGN CONTRACT), CONTRACTOR SHALL SUBMIT REBAR SHOP DRAWINGS FOR REVIEW PRIOR TO FABRICATION.
c. REINFORCING SHALL BE ACCURATELY PLACED, RIGIDLY SUPPORTED AND FIRMLY TIED IN PLACE, WITH APPROPRIATE BAR SUPPORTS AND SPACERS. DETAILS OF CONCRETE REINFORCEMENT SHALL BE IN ACCORDANCE WITH "THE MANUAL OF STANDARD PRACTICE FOR REINFORCED CONCRETE CONSTRUCTION" AS PUBLISHED BY THE CONCRETE REINFORCING STEEL INSTITUTE UNLESS OTHERWISE NOTED.
d. PLACING DRAWINGS AND BAR LISTS SHALL CONFORM TO ACI'S "MANUAL OF STANDARD PRACTICE FOR DETAILING REINFORCED CONCRETE STRUCTURES."(ACI SP-66)
e. LAP CONTINUOUS REINFORCING 48 BAR DIA.
f. LAP BOTTOM STEEL OVER SUPPORTS AND TOP STEEL AT MIDSPAN (U.N.O.).
g. HOOK DISCONTINUOUS ENDS OF TOP BARS AND ALL BARS IN WALLS (U.N.O.).
h. PROVIDE COVER OVER REINFORCING AS FOLLOWS:

ELEMENTS	BOT	TOP	SIDES
FOOTING AND PILE CAPS	3"	2"	3"
GRADE BEAMS WITH SIDES FORMED	3"	2"	2"
BEAMS ABOVE GRADE	1 1/2"	1 1/2"	1 1/2"
COLUMNS	-	-	1 1/2"
SLABS ON GRADE	2"	2"	2"
SLABS ABOVE GRADE	3/4"	3/4"	3/4"
SLABS EXP. TO WEATHER(#5)	1 1/2"	1 1/2"	1 1/2"
SLABS EXP. TO WEATHER(LARGER)	2"	2"	2"
WALLS RETAINING FIL	-	-	-
WALLS ABOVE GRADE	-	-	-
CONCRETE CAST AGAINST EARTH	3"	3"	3"

i.*IF GRADE BEAM SIDES ARE UNFORMED, EXCAVATE 2" WIDER (1" EACH SIDE) THAN SPECIFIED AND INCREASE COVER TO 3".
j. HORIZONTAL AND VERTICAL BARS SHALL LAP 6 X BAR DIA., SEE LAP SPLICE SCHEDULE.
k. UNSCHEDULED FIELD LAPS ARE SUBJECT TO ENGINEER'S REVIEW.
l. TENSION LAP SPLICE SCHEDULE:

PLAN REINFORCEMENT					
MASONRY BAR NO.	SPLICE LENGTH	OTHER THAN TOP BARS		BOTTOM BARS	
		(3500PSI)	(4000PSI)	(3500PSI)	(4000PSI)
3	-	16"	16"	21"	18"
4	24"	22"	19"	28"	24"
5	30"	27"	23"	35"	30"
6	36"	35"	31"	46"	40"
7	42"	48"	42"	63"	64"

m. PROVIDE 3'-0"X3'-0" CORNER BARS LAPPED AND TIED TO EACH BEAM REBAR, TYPICAL AT ALL CORNERS. THESE CORNER BARS SHALL BE THE SAME SIZE AS LONGITUDINAL BEAM BARS. SEE DETAILS FOR ADDITIONAL INFORMATION.
n. REINFORCEMENT SHALL BE CAREFULLY PLACED, RIGIDLY SUPPORTED AND WELL TIED WITH BAR SUPPORTS AND SPACERS.
o. REINFORCING STEEL IN FOOTINGS SHALL BE ASSEMBLED AS MATS WITH BARS EQUALLY SPACED AND WIRED TOGETHER AT EACH INTERSECTION BEFORE CONCRETE IS PLACED.
p. DOWEL COLUMN AND WALL REINFORCING TO FOOTING WITH SAME SIZE AND NUMBER OF DOWELS AS VERTICAL BARS ABOVE.
q. DOWELS SHALL BE HOOKED "L" AT BOTTOM AND SHALL BE LAPPED 36 BAR DIAMETER WITH THE COLUMN OR WALL REINFORCING ABOVE.
r. PROVIDE THE FOLLOWING TEMPERATURE REINFORCING FOR ONE-WAY SLABS, U.N.O.

SLAB THICKNESS	REINFORCING
3 1/2 " 4 1/4"	#3 @ 12" U.N.O
4 1/2 " 61/2"	#4 @ 18" U.N.O
6 1/2 " 7 1/2"	#4 @ 15" U.N.O
7 1/2 " 8 1/2"	#4 @ 12" U.N.O

s. UTILITIES SHALL NOT PENETRATE BEAMS OR COLUMNS BUT MAY PASS THROUGH SLABS AND WALLS INDIVIDUALLY, U.N.O.
t. FOR OPENINGS 24" WIDE OR LESS, ADD (1) #5 X 6' MID DEPTH DIAGONAL AT ALL FOUR CORNERS.
u. FOR OPENINGS BETWEEN 12" AND 24" WIDE, CUT REINFORCING AND REPLACE ALONGSIDE OPENING WITH SPLICE BARS OF EQUIVALENT AREA WITH 48 BAR DIA. LAP.
v. PREPARE AND SUBMIT SHOP DRAWINGS FOR OPENINGS WIDER THAN 24". WHERE REINFORCING STEEL CONGESTION PERMITS, CONDUIT AND PIPES UP TO 1" DIAMETER MAY BE EMBEDDED IN CONCRETE.
PER ACI 318, SECTION 6.3., SPACE AT 3" DIAMETERS O.C. PLACE BETWEEN OUTER LAYERS OF REINFORCING.]
w. IF CONDUITS ARE SIGNIFICANTLY CONGESTED, ADDITIONAL REINFORCING PERPENDICULAR TO PIPING MAY BE REQUIRED. REQUESTS TO EMBED LARGER PIPES SHOULD BE ACCOMPANIED BY A DETAILED DESCRIPTION AND BE SUBMITTED TO THE SEOR FOR EVALUATION.
x. REINFORCED CONCRETE DEVELOPMENT AND SPLICE LENGTH

JS ARCHITECTS
9726 E. 42nd St. Suite 153, Tulsa, 74146
918.640.6800 - jhnsanford@aol.com

COPYRIGHT 2026 John Sanford

6-08-2026

NOT VALID FOR CONSTRUCTION UNLESS SIGNED IN THIS BLOCK

DEVELOPED BY
HI-TECH HOSPITALITY
Residence INN BY MARRIOTT

RESIDENCE INN BY MARRIOTT

NW CORNER OF PINE & MEMORIAL, TULSA, OK

THESE DRAWINGS ARE INTENDED FOR REVIEW AND PERMITTING. DRAWINGS ARE NOT TO BE USED FOR CONSTRUCTION WITHOUT ARCHITECT'S AND ENGINEER'S SIGNATURE AND THEIR DATE OF ISSUE FOR CONSTRUCTION.

TULSA AIRPORT RIBM
61208
Project Number

No.	Description	Date

SHEET
S101
STRUCTURAL NOTES

REBAR SIZE NO. #	NOMINAL BAR DIAMETER	[1]BARS AND WIRES IN TENSION	[2]SPLICES OF BARS AND WIRES IN TENSION	[3]BARS IN TENSION IN STANDARD HOOK	[4]BARS AND WIRES IN COMP.	[5]SPLICES OF BARS AND WIRES IN COMP	[1]BARS AND WIRES IN TENSION	EPOXY COATED BARS [2]SPLICES OF BARS AND WIRES IN TENSION	EPOXY COATED BARS [3]BARS IN TENSION IN STANDARD HOOK	EPOXY COATED BARS [4]BARS IN COMP.	EPOXY COATED BARS [5]SPLICES BARS IN COMP
	d_b	l_d	ls	l_{dh}	l_{dc}	l_{sc}	l_d	l_s	l_{dh}	l_{dc}	l_{dc}
3	0.375 in	12 in	16 in	6 in	8 in	12 in	13 in	17 in	6 in	8 in	12 in
4	0.500 in	15 in	19 in	7 in	9 in	15 in	18 in	23 in	8 in	9 in	15 in
5	0.625 in	18 in	24 in	8 in	12 in	19 in	22 in	29 in	10 in	12 in	19 in
6	0.750 in	22 in	29 in	10 in	14 in	23 in	27 in	35 in	12 in	14 in	23 in
7	0.875 in	32 in	42 in	12 in	17 in	26 in	39 in	51 in	14 in	17 in	26 in
8	1.000 in	37 in	48 in	13 in	19 in	30 in	44 in	58 in	16 in	19 in	30 in
9	1.128 in	42 in	54 in	15 in	21 in	34 in	55 in	71 in	18 in	21 in	34 in
10	1.270 in	50 in	65 in	17 in	24 in	38 in	65 in	85 in	20 in	24 in	38 in
11	1.410 in	61 in	80 in	19 in	27 in	42 in	80 in	104 in	22 in	27 in	42 in

1. ld = DEVELOPMENT LENGTH IS THE LENGTH REQUIRED FOR THE HORIZONTAL REINFORCEMENT BAR TO BE PLACED IN FRESH OR EXISTING CONCRETE.
2. ls = SPLICE LENGTH IS THE LENGTH REQUIRED FOR THE HORIZONTAL REINFORCEMENT BAR TO BE TIED TO ANOTHER HORIZONTAL REINFORCEMENT BAR.
3. ldh = HOOK DEVELOPMENT LENGTH IS THE LENGTH REQUIRED FOR THE HORIZONTAL REINFORCEMENT BAR WHICH TERMINATES IN 90O, 135O OR 180O TO BE PLACED IN FRESH OR EXISTING CONCRETE.
4. ldc = DEVELOPMENT LENGTH IS THE LENGTH REQUIRED FOR THE VERTICAL REINFORCEMENT BAR TO BE PLACED FRESH OR EXISTING CONCRETE.
5. lsc = SPLICE LENGTH IS THE LENGTH REQUIRED FOR THE VERTICAL REINFORCEMENT BAR TO BE TIED TO ANOTHER VERTICAL REINFORCEMENT BAR. MINIMUM INSIDE BEND DIAMETERS & STANDARD HOOK GEOMETRY FOR STIRRUPS, TIES & HOOPS.

TYPE OF STANDARD HOOK	BAR SIZE	MINIMUM INSIDE BEND DIAMETERS,in.	STRAIGHT EXTENSION [1] ƒext, in.	TYPE OF STANDARD HOOK
90^0 HOOK	NO.3 THROUGH NO.5	$4d_b$	GREATER OF $6d_b$ & 3 in.	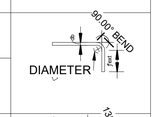
	NO.6 THROUGH NO.5	$6d_b$	$12d_b$	
135^0 HOOK	NO.3 THROUGH NO.5	$4d_b$	GREATER OF $6d_b$ & 3 in.	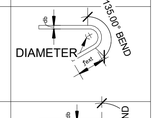
	NO.6 THROUGH NO.5	$6d_b$		
180^0 HOOK	NO.3 THROUGH NO.5	$4d_b$	GREATER OF $6d_b$ & 3 in.	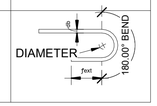
	NO.6 THROUGH NO.5	$6d_b$		

[1] A STANDARD HOOK FOR STIRRUPS, TIES & HOOPS INCLUDES THE SPECIFIC INSIDE BENS DIAMETER & STRAIGHT EXTENSION LENGTH, IT SHALL BE PERMITTED TO USE A LONGER STRAIGHT EXTENSION AT THE END OF A HOOK. A LONGER EXTENSION SHALL NOT BE CONSIDERED TO INCREASE THE ANCHORAGE CAPACITY OF THE HOOK.

Z.[4, 5] MASONRY DEVELOPMENT & SPLICE SCHEDULE

REBAR SIZE NO. #	NOMINAL BAR DIAMETER d_b,IN	NOMINAL AREA,IN^2	1 DEVELOPMENT LENGTH, IN	[2] IBC SPLICE LENGTH, IN	EPOXY COATED BARS [1,3] EPOXY COATED DEVELOPMENT LENGTH, IN	EPOXY COATED BARS 2,3 EPOXY COATED SPLICE LENGTH, IN
3	0.375	0.11	12	36	18	54
4	0.500	0.20	12	48	18	72
5	0.625	0.31	18	60	28	90
6	0.750	0.44	34	72	51	108
7	0.875	0.60	47	84	70	126
8	1.000	0.79	70	96	106	144
9	1.128	1.00	90	108	134	162
10	1.270	1.27	114	122	170	183
11	1.410	1.56	140	135	210	203

1. DEVELOPMENT LENGTH IS THE LENGTH REQUIRED FOR THE REINFORCEMENT BAR TO BE PLACED IN FRESH OR EXISTING CONCRETE.
2. SPLICE LENGTH IS THE LENGTH REQUIRED FOR THE REINFORCEMENT BAR TO BE TIED TO ANOTHER REINFORCEMENT BAR.
3. TMS 8.1.6.2, IBC 2107.2.1. EPOXY COATED REBARS SHALL BE TAKEN AS 150 PERCENT OF THE DEVELOPMENT AND SPLICE LENGTHS.
4. IBC 2107.4 MAXIMUM BAR SIZE. THE BAR DIAMETER SHALL NOT EXCEED 1/8TH OF THE NOMINAL WALL THICKNESS, AND SHALL NOT EXCEED 1/4TH OF THE LEAST DIMENSION OF THE CELL, COURSE OR COLLAR JOINT IN WHICH IT IS PLACED.
5. TMS 8.1.6.7.1.3 BARS SPLICED BY NON-CONTACT LAP SPLICES SHALL NOT BE SPACED TRANSVERSELY FARTHER APART THAN 1/5TH THE REQUIRED LENGTH OF LAP, NOR MORE THAN 8".

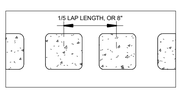

14. WELDED WIRE MESH

a. WELDED WIRE MESH SHALL BE ASTM A185, GRADE 65, FREE FROM OIL, SCALE AND RUST AND SHALL BE PLACED IN ACCORDANCE WITH THE ACI TYPICAL DETAILS.
b. MINIMUM LAP SHALL BE ONE SPACE PLUS TWO INCHES.

15. EXPANSION ANCHORS

a. USE WEDGE-TYPE EXPANSION ANCHORS SUCH AS THE HILTI KWIK BOLT, ITW RAMSET RED HEAD TRUBOLT WEDGE, POWERS RAWL POWER-STUD, SIMPSON STRONG-TIE WEDGE-All OR ACCEPTED EQUIVALENT .FOLLOW MANUFACTURER'S SPECIFICATIONS FOR USE AND INSTALLATION.

b. CONFIRM THE ABSENCE OF REINFORCING STEEL BY DRILLING A 1/4" DIAMETER PILOT HOLE FOR EACH ANCHOR. DO NOT CUT REINFORCING STEEL WITHOUT APPROVAL OF THE STRUCTURAL ENGINEER.

c. PROVIDE ANCHOR EMBEDMENT, SPACING AND EDGE DISTANCE AS SHOWN ON THE DRAWINGS.

16. CHEMICAL ADHESIVE FOR ANCHORING REINFORCING BARS, THREADED RODS AND ANCHOR BOLTS

a. THREADED RODS ARE ASTM A193 B7 STEEL, U.N.O.

b. USE AN EPOXY, ACRYLIC OR POLYESTER RESIN ADHESIVE SYSTEM SUCH AS THE HILTI HIT HY200 2 PART EPOXY INJECTION SYSTEM, OR ACCEPTED EQUIVALENT. FOLLOW MANUFACTURER'S SPECIFICATIONS FOR USE AND INSTALLATION. CONFIRM THE ABSENCE OF REINFORCING STEEL BY DRILLING A 1/4" DIAMETER PILOT HOLE FOR EACH ANCHOR. DO NOT CUT REINFORCING STEEL WITHOUT APPROVAL OF THE STRUCTURAL ENGINEER.

c. REFER TO MANUFACTURER'S INSTALLATION INSTRUCTIONS FOR APPROPRIATE DRILL SIZE. THOROUGHLY CLEAN HOLE INCLUDING REMOVAL OF DUST PRIOR TO FILLING WITH EPOX'D.

d. PROVIDE ANCHOR EMBEDMENT, SPACING AND EDGE DISTANCE AS SHOWN ON THE DRAWINGS.

17. POWDER ACTUATED FASTENERS

a. DL USE POWDER ACTUATED FASTENING SYSTEMS SUCH AS THOSE MANUFACTURED BY HILTI, ITW RAMSET/ REDHEAD, RAWL OR AN SEOR APPROVED ALTERNATE.

b. INSTALL IN ACCORDANCE WITH MANUFACTURER'S SPECIFICATIONS.

c. PROVIDE A MINIMUM OF TWO FASTENERS PER CONNECTION.

d. PROVIDE A MINIMUM PENETRATION IN ACCORDANCE WITH MANUFACTURER'S SPECIFICATIONS BUT NOT LESS THAN 1-1/8" IN CONCRETE, U.N.O.

e. PROVIDE A MINIMUM ANCHOR SPACING AND EDGE DISTANCE OF 3" IN CONCRETE AND A MINIMUM ANCHOR SPACING OF 1" AND EDGE DISTANCE OF 1/2" IN STEEL.

18. TIMBER NOTES

a. ALL WOOD MEMBERS HAVE BEEN DESIGNED IN ACCORDANCE WITH THE NATIONAL DESIGN SPECIFICATION FOR WOOD CONSTRUCTION AND ITS SUPPLEMENT, (NDS), 2018 EDITION.

b. ALL WOOD FOR BEAMS, BEARING WALLS, SOLE PLATES, TOP PLATES, BLOCKING, BRACING, LEDGERS,CRIPPLES,SILLS, ETC. SHALL BE SPRUCE-PINE-FIR NO.2 OR BETTER WITH MOISTURE CONTENT OF 19% OR LESS.

c. FLOOR I JOISTS SHALL BE SOUTHERN PINE NO.1

d. MICRO LAM BEAMS SHALL BE MANUFACTURED BY TRUSS-JOIST CORP. OR AN APPROVED EQUAL AND SHALL PROVIDE A MODULUS OF ELASTICITY OF 1,900,000 PSI, A MINIMUM FLEXURAL STRENGTH OF 2600 PSI AND A MINIMUM HORIZONTAL SHEAR STRESS OF PSI.

e. ALL WOOD IN CONTACT WITH CONCRETE OR CONCRETE BLOCK SHALL BE PRESSURE TREATED .ACCEPTABLE TREATMENTS INCLUDE ACQ (AMINE COPPER QUAT) COPPER BORON AZOLE, ACID COPPER CHROMATE AND COPPER CITRATE.

f. BORATE BASED TREATMENTS SUCH AS ZINC BORATE AND SODIUM BORATE ARE ALSO ACCEPTABLE FOR INDOOR USES.

g. FOR STRUCTURAL USES, AVOID BUYING TREATED LUMBER THAT CONTAINS MORE THAN 1/2" OF HEARTWOOD.

h. AVOID INHALATION OF SAWDUST PRODUCED BY PRESSURE TREATED WOOD. WEAR A DUST MASK AND WORK OUTDOORS. DISPOSE OF DUST AND SCRAP BY ORDINARY TRASH COLLECTION. DO NOT BURN. PRESSURE TREATED WOOD MAY PRODUCE TOXIC F.

i. LIGHT GAUGE STRAPS SHALL BE INSTALLED ACCORDING TO MANUFACTURER'S INSTRUCTIONS. HANGERS OR STRAPS THAT DO NOT MATCH EXACTLY THE ONES SPECIFIED ON THE DRAWINGS IN STEEL YIELD OR ULTIMATE STRENGTH, STEEL DIMENSIONS (LENGTH AND WIDTH), NUMBER AND DIAMETER OF HOLES FOR THE SAME SIZES OF NAILS OR BOLTS,AND/OR DO NOT HAVE THE SAME GENERAL SHAPE WILL NOT BE ACCEPTABLE UNLESS APPROVED BY THE SEOR.

j. NO POCKETS WILL BE ALLOWED IN CONCRETE OR STEEL MEMBERS FOR CONNECTION OF WOOD MEMBERS UNLESS THE CONNECTION DETAIL IS IN WRITING PRIOR TO INSTALLATION.

k. ALL NAILS, SCREWS AND BOLTS SHALL BE HOT-DIPPED GALVANIZED.

l. ALL TJI JOISTS AND PARALLEL BEAMS AND COLUMNS SHALL BE AS MANUFACTURED BY TRUSS JOIST INC OR AN APPROVED EQUAL. SUBMIT MANUFACTURER SPECIFICATIONS TO SEOR FOR REVIEW AND APPROVAL (AS REQUIRED BY THE DESIGN CONTRACT).

19. PRE-ENGINEERED TIMBER TRUSS NOTES

a. WOOD TRUSSES TO BE DESIGNED AND FABRICATED IN ACCORDANCE WITH THE "NATIONAL DESIGN SPECIFICATIONS FOR STRESS-GRADE LUMBER AND ITS FASTENINGS" BY THE NFPA.

b. TRUSS DESIGN SHALL COMPLY WITH TPI/WTCABCSI 1-2013" BUILDING COMPONENT SAFETY INFORMATION GUIDE TO GOOD PRACTICE FOR HANDLING, INSTALLING & BRACING OF METAL PLATE CONNECTED WOOD TRUSSES" AND TPI 1-2014" NATIONAL DESIGN STANDARD FOR METAL-PLATE CONNECTED WOOD CONSTRUCTION"

c. CONNECTOR PLATES SHALL BE A MINIMUM THICKNESS OF 0.036" AND BE MANUFACTURED FROM STEEL MEETING THE REQUIREMENTS OF ASTM A446, GRADE A AND SHALL BE HOT-DIPPED GALVANIZED.

d. IN HIGHLY CORROSIVE ENVIRONMENTS, CONNECTOR PLATES AS WELL AS THE LIGHT GAUGE STRAPS AND ALL THE NAILS, SHALL BE HOT DIPPED GALVANIZED, TRIPLE ZINC G-185 COATED OR MADE WITH STAINLESS STEEL.

e. THE STRUCTURAL FRAMING SHOWN IS SCHEMATIC IN NATURE. HOWEVER THE SUPPORTING STRUCTURE HAS BEEN DESIGNED UNDER THE ASSUMPTION THAT THE FRAMING SCHEME SHOWN WILL CLOSELY PARALLEL FINAL TRUSS DESIGNERS LAYOUT. THE LOCATIONS OF GIRDERS AND TRUSSES SHOWN ON THE ROOF FRAMING PLAN WERE USED TO FACILITATE DESIGN OF FOUNDATIONS, WALLS, AND BEAMS.

f. PROVIDE SIGNED AND SEALED SHOP DRAWINGS AND CALCULATIONS FOR APPROVAL PRIOR TO FABRICATION. RELEASE OF TRUSSES FOR FABRICATION PRIOR TO ENGINEER APPROVAL WILL BE AT THE SOLE RISK OF THE 'RELEASER'

g. REVIEW OF SHOP DRAWINGS IS REQUIRED AS THE ENGINEER CHECKS BEAM, WALL, COLUMN AND FOOTING CAPACITIES AGAINST KNOWN LOADING. FAILURE TO PROVIDE SHOP DRAWINGS MAY RESULT IN ADDITIONAL ENGINEERING COSTS DURING CONSTRUCTION.

h. TRUSS FABRICATOR SHALL PROVIDE ENGINEERED SHOP DRAWINGS OF EACH INDIVIDUAL TRUSS AND A FULLY DIMENSIONED ERECTION PLAN SHOWING COMPONENT LAYOUT.

i. TRUSS DESIGNS SHALL BE SIGNED AND SEALED BY A QUALIFIED STATE LICENSED PROFESSIONAL ENGINEER.

j. CONTRACTOR SHALL SUBMIT SIGNED AND SEALED DRAWINGS OF ALTERNATE CONNECTION DETAILS AT TRUSSES/GIRDERS TO COLUMNS AND WALLS FOR APPROVAL.

k. HANDLING, ERECTION AND BRACING OF TRUSSES SHALL BE IN ACCORDANCE WITH TRUSS PLATE INSTITUTE RECOMMENDATIONS.

l. THE CONTRACTOR WILL BE RESPONSIBLE FOR KEEPING THE ROOF SAFELY IN PLACE IN THE EVENT OF HIGH WINDS OR OTHER TRANSIENT LOADING CONDITIONS DURING CONSTRUCTION. FAILURE TO COMPLY WITH THESE PARAMETERS WILL MAKE THE CONTRACTOR SOLELY RESPONSIBLE FOR ANY AND ALL CONSEQUENTIAL DAMAGES CAUSED BY THE HORIZONTAL THRUST DEVELOPED BY THE ROOF FRAMING DUE TO SUPERIMPOSED LOADING AND TRANSFERRED INTO HE BEAMS, WALLS AND COLUMNS.

m. THE ARCHITECT AND ITS CONSULTANTS OR DESIGN PROFESSIONALS WILL NOT BE RESPONSIBLE FOR ANY DAMAGE CAUSED AS A CONSEQUENCE OF TERMITE INFESTATION.

n. THE LIGHT GAUGE STRAPS SPECIFIED ON THE WALL SECTIONS AND PLANS ARE PROVIDED TO FACILITATE THE CONSTRUCTION SCHEDULE AND MAY CHANGE PREDICATED ON THE TRUSS AND GIRDER REACTIONS PROVIDED BY THE TRUSS ENGINEER.

20. STRUCTURAL STEEL

a. THE MATERIAL, FABRICATION, AND ERECTION OF STRUCTURAL STEEL SHALL COMPLY WITH THE SPECIFICATIONS FOR THE DESIGN, FABRICATION AND ERECTION OF STRUCTURAL STEEL FOR BUILDINGS,14TH EDITION BY THE AMERICAN INSTITUTE OF STEEL CONSTRUCTION.

b. STRUCTURAL STEEL SHAPES SHALL BE FABRICATED FROM THE FOLLOWING MATERIALS:

SECTION/SHAPE	ASTM	YIELD STRESS FY(KSI)	GRADE
W, WT	A992	50	-
M,S,C,MC,ANGLE	A36	36	-
BAR	A36	36	-
PLATE	A36	36	-
HSS SQUARE, RECTANGULAR	A500	46	B
PIPE (TYPE E OR R)	A53	35	B

c. SPACE FILLER BEAMS EQUALLY BETWEEN SUPPORTS, U.N.O.

d. DO NOT SPLICE STRUCTURAL STEEL MEMBERS EXCEPT WHERE INDICATED ON THE DRAWINGS.

e. SEE ARCHITECTURAL AND MECHANICAL DRAWINGS FOR MISCELLANEOUS STEEL NOT SHOWN ON THE STRUCTURAL DRAWINGS.

f. REFER TO ARCHITECTURAL DRAWINGS AND PROJECT SPECIFICATIONS (WHERE APPLICABLE) FOR PAINTING AND FIREPROOFING.

g. ALL STEEL SHALL RECEIVE SHOP AND FIELD TOUCH-UP COATS OF PAINT IN ACCORDANCE WITH SSPC SPECIFICATIONS.

21. COMPOSITE CONSTRUCTION

a. ALL STEEL BEAMS (INCLUDING CHANNELS, STEEL TUBES, WIDE FLANGE SECTIONS, TRUSSES, ETC) SUPPORTING CONCRETE FLOORS ON STEEL DECK ARE TO BE CONSTRUCTED AS COMPOSITE WITH THE SLAB AND SHALL BE CONSTRUCTED UNSHORED, U.N.O.

b. WELD ¾" DIAMETER HEADED STEEL STUDS TO ALL COMPOSITE BEAMS – UNLESS BASE MATERIAL IS THINNER THAN 0.3H, (THEN,USE 5/8" DIAMETER STUDS.) WELD STUDS THROUGH DECK.

c. STUDS SHALL CONFORM TO AWS 01.1. STUD LENGTH SHALL EXTEND 1 1/2" ABOVE TOP FLUTE OF DECK.

d. SPACE STUDS AT 12" O.C. FOR GIRDERS SUPPORTING BEAMS AND AT 24" O.C. FOR BEAMS SUPPORTING STEEL DECK ONLY, U.N.O.

22. SHEAR STUDS

a. SHEAR STUD CONNECTORS SHALL BE FABRICATED AND INSTALLED IN ACCORDANCE WITH AWS D1.1 STRUCTURAL WELDING CODE',SECTION 7-STUD WELDING.

b. STUDS SHALL BE TYPE 'B', HEADED STUDS HAVING A MINIMUM TENSILE STRENGTH OF 60,000 PSI AND SHALL BE OF LENGTH AND DIAMETER SHOWN ON STRUCTURAL DRAWINGS.

23. BOLTS CONNECTIONS

a. A325 AND A490 BOLTS SHALL COMPLY WITH "SPECIFICATION FOR STRUCTURAL JOINTS USING ASTM A325 OR A490 BOLTS" INCLUDING COMMENTARY.

b. USE A-307 BOLTS FOR ALL ERECTION BOLTS AND BOLTS LESS THAN 3/4" DIAMETER, U.N.O.

c. USE A-325 BOLTS FOR ALL TYPICAL BOLTS

d. ANCHOR RODS SHALL BE ASTM F1554 GRADE 55 WITH SUPPLEMENTARY REQUIREMENT S1,HOOKED AND 1 1/2 ASTM F1554 GRADE 105 WITH SUPPLEMENTAL REQUIREMENTS, STRAIGHT WITH NUTS AND WASHERS EACH END.

e. TIGHTEN BEARING-TYPE BOLTS (A-325N, A-325X, A-490N, AND A-490X) TO THE SNUG TIGHT CONDITION AS FOLLOWS:

f. BOLTS SHALL BE PLACED IN ALL HOLES, WITH WASHERS POSITIONED AS REQUIRED AND NUTS THREADED TO COMPLETE THE ASSEMBLY.

g. COMPACTING THE JOINT TO THE SNUG-TIGHT CONDITION SHALL PROGRESS SYSTEMATICALLY FROM THE MOST RIGID PART OF THE JOINT.

h. THE SNUG-TIGHTENED CONDITION IS THE TIGHTNESS THAT IS ATTAINED WITH A FEW IMPACTS OF AN IMPACT WRENCH OR THE FULL EFFORT OF AN IRON WORKER USING AN ORDINARY SPUD WRENCH.

i. MORE THAN ONE CYCLE THROUGH THE BOLT PATTERN MAY BE REQUIRED TO ACHIEVE THE SNUG TIGHTENED JOINT.

j. TIGHTEN SLIP-CRITICAL BOLTS (A-325SC AND A-490SC) TO THE MINIMUM FASTENER TENSION INDICATED IN TABLE 8.1 OF THE "SPECIFICATION FOR STRUCTURAL JOINTS USING ASTM A-325 OR ASTM A-490 BOLTS" AS FOLLOWS:

k. BEGIN FINAL TIGHTENING OF SLIP-CRITICAL BOLTS ONLY AFTER A SNUG-TIGHT JOINT AS DESCRIBED ABOVE IS ACHIEVED.

l. IF SPLINED END OF TENSION-CONTROL BOLTS IS SEVERED PRIOR TO ACHIEVING SNUG-TIGHT JOINT,REMOVE AND REPLACE THE FASTENER ASSEMBLY.

m. PROGRESS SYSTEMATICALLY FROM THE MOST RIGID PART OF THE JOINT.

n. DETERMINE TENSION USING EITHER LOAD INDICATOR WASHERS OR TENSION-CONTROL BOLTS. AT THE CONTRACTOR'S OPTION, SLIP-CRITICAL BOLTS MAY BE INSTALLED IN EITHER STANDARD,OVERSIZE, OR SHORT SLOTTED HOLES. DESIGN OF CONNECTIONS USING SLIP CRITICAL BOLTS IS BASED ON A CLASS A FAILING SURFACE AND OVER SIZED HOLES.

o. PROVIDE HARDENED WASHERS CONFORMING TO ASTM F436 AND PLACE UNDER THE PART BEING TURNED.

p. DO NOT REUSE OR RE-TIGHTEN BOLTS WHICH HAVE BEEN FULLY TIGHTENED. USE ONLY NON-GALVANIZED NUTS AND BOLTS THAT ARE CLEAN, RUST-FREE, AND WELL LUBRICATED. BOLTS AND NUTS SHALL BE WAX DIPPED BY THE BOLT SUPPLIER OR LUBRICATED WITH JOHNSON'S STICK WAX 140. CLEANING AND LUBRICATION OF ASTM F1852TWIST-OFF-TYPE TENSION- CONTROL BOLTS IS NOT PERMITTED.

q. WHERE SLOTTED HOLES ARE USED TO ACCOMMODATE THERMAL MOVEMENT, NOTIFY THE ENGINEER IF BOLT IS EXPECTED TO HIT THE END OF SLOT, BASED ON TEMPERATURE AT TIME INSTALLATION.

r. STORE FASTENER COMPONENTS IN SEALED CONTAINERS UNTIL READY FOR USE. RESEAL OPEN CONTAINERS TO PREVENT CONTAMINATION BY MOISTURE OR OTHER DELETERIOUS SUBSTANCES. STORE CLOSED CONTAINERS FROM DIRT AND MOISTURE IN A PROTECTIVE SHELTER. TAKE FROM PROTECTIVE STORAGE ONLY AS MANY FASTENER COMPONENTS AS ARE ANTICIPATED TO BE INSTALLED DURING THE WORK SHIFT. FASTENER COMPONENTS THAT ARE NOT INCORPORATED INTO THE WORK SHALL BE RETURNED TO PROTECTIVE STORAGE AT THE END OF THE WORK-SHIFT. FASTENERS FROM OPEN CONTAINERS AND FASTENERS THAT ACCUMULATE RUST OR DIRT SHALL NOT BE USED AND SHALL BE IMMEDIATELY AND PERMANENTLY REMOVED FROM THE PROJECT SITE.

24.EXPANSION JOINT

a. THE VERTICAL EXPANSION JOINT IN STRAIGHT WALL SHOULD NOT BE MORE THAN 25'-0"

25.WELDED CONNECTIONS

a. WELDING SHALL BE DONE BY AWS CERTIFIED WELDERS USING THE MOST RECENT AWS APPROVED TECHNIQUES. SHIELDED METAL ARC WELDING (SMAW) SHALL USE E70XX LOW HYDROGEN ELECTRODES.

b. ALL SHOP AND FIELD WELDING SHALL CONFORM TO THE AWS 01.1 STRUCTURAL WELDING CODE BY THE AMERICAN WELDING SOCIETY.

c. WHERE NECESSARY, REMOVE GALVANIZING OR PRIMER PRIOR TO WELDING.

25.FORM WORK AND SHORING

a. NO STRUCTURAL CONCRETE SHALL BE STRIPPED UNTIL IT HAS REACHED AT LEAST TWO-THIRDS OF THE 28 DAY DESIGN STRENGTH.

b. FORM WORK, SHORING AND BRACING FOR ALL CONCRETE BEAMS, SLABS, COLUMNS, WALLS AND FOOTINGS SHALL BE DESIGNED AND CONSTRUCTED IN ACCORDANCE WITH ACI STANDARDS 347 AND 301 AND STATE AND LOCAL BUILDING CODES AND SHALL BE DESIGNED BY A REGISTERED ENGINEER.

26.SETTING BASE AND BEARING PLATES

a. CLEAN CONCRETE AND MASONRY BEARING SURFACE OF BOND-REDUCING MATERIALS AND CLEAN BOTTOM OF BASE AND BEARING PLATE.

b. SET BASE OR BEARING PLATE ON WEDGES OR OTHER ADJUSTING DEVICES

c. TIGHTEN ANCHOR RODS AFTER STRUCTURAL STEEL FRAME HAS BEEN PLUMBED. DO NOT REMOVE WEDGES OR SHIMS BUT, IF PROTRUDING, CUT OFF FLUSH WITH EDGE OF BASE OR BEARING PLATE PRIOR TO PACKING WITH GROUT.

d. PACK OR POUR NON-SHRINK, NON-METALLIC GROUT SOLIDLY BETWEEN BEARING SURFACE AND BASE OR BEARING PLATE. ENSURE THAT NO VOIDS REMAIN. FINISH EXPOSED SURFACES, PROTECT GROUT AND ALLOW TO CURE.

e. FOR PROPRIETARY GROUT MATERIALS, COMPLY WITH MANUFACTURER'S INSTRUCTIONS.

f. BASE PLATES MUST BE GROUTED A MINIMUM OF 72 HOURS PRIOR TO PLACING CONCRETE SLABS ON SUPPORTING STEEL STRUCTURE.

g. CUT, DRILL OR PUNCH HOLES PERPENDICULAR TO METAL SURFACES. REAM HOLES THAT MUST BE ENLARGED TO ADMIT BOLTS AS PERMITTED BY THE EOR. DO NOT ENLARGE UNFAIR HOLES BY BURNING OR USING DRIFT PINS.

JS ARCHITECTS
9726 E. 42nd St. Suite 153, Tulsa, 74146
918.640.6800 - jhnsanford@aol.com

COPYRIGHT 2026 John Sanford

6-08-2026

NOT VALID FOR CONSTRUCTION UNLESS SIGNED IN THIS BLOCK

DEVELOPED BY
HI-TECH HOSPITALITY
Residence INN BY MARRIOTT

RESIDENCE INN BY MARRIOTT

NW CORNER OF PINE & MEMORIAL, TULSA, OK

THESE DRAWINGS ARE INTENDED FOR REVIEW AND PERMITTING. DRAWINGS ARE NOT TO BE USED FOR CONSTRUCTION WITHOUT ARCHITECT'S AND ENGINEER'S SIGNATURE AND THEIR DATE OF ISSUE FOR CONSTRUCTION.

TULSA AIRPORT RIBM
61208
Project Number

No.	Description	Date

SHEET
S102
STRUCTURAL NOTES

27. MASONRY

a. NET AREA COMPRESSIVE STRENGTH OF MASONRY: f'm=1900 PSI. U.N.O.

b. NET AREA COMPRESSIVE STRENGTH OF MASONRY UNITS WITH MORTAR: f'c=1900 PSI. U.N.O.

c. MORTAR SHALL CONFORM TO ASTM C270 AND THE FOLLOWING (UNLESS NOTED OTHERWISE)

d. FOR MASONRY BELOW GRADE : TYPE 'M' WITH A MINIMUM AVERAGE STRENGTH OF 2500 PSI

e. FOR MASONRY BELOW GRADE : TYPE 'S' WITH A MINIMUM AVERAGE STRENGTH OF 1800 PSI

f. ALL CONCRETE MASONRY UNITS SHALL CONFIRM TO ASTM C90, 'STANDARD SPECIFICATION FOR ALLOW LOAD BEARING CONCRETE MASONRY UNITS.

g. MASONRY WALLS HAVE BEEN DESIGNED USING STRENGTH AND DEFLECTION DESIGN OF REINFORCED UNIT MASONRY ARE DESIGNED ACCORDING TO STATE AND LOCAL BUILDING CODE AND ACI 530 SECTION 3.2.5

28. SPREAD FOOTING AND MISCELLANEOUS FOUNDATIONS

FOLLOWING ARE THE DATA NOT RECEIVED FROM GEO TECHNICAL AGENCY.

a. GEO TECHNICAL ENGINEER CONSTRUCTION & GEOTECHNICAL MATERIAL TESTING,INC.

b. DATE OF REPORT 2019.06.10

c. PROJECT NUMBER18G0238

d. ALLOWABLE SOIL BEARING CAPACIT4000PSF

e. A FROST DEPTH OF (-) 1'-6" BE UTILIZED FOR ALL EXTERIOR FOOTINGS IN NON-HEATED SPACE.

SPECIAL INSPECTION PLAN

1. GENERAL REQUIREMENTS FOR SPECIAL BUILDING INSPECTIONS:

a. BACKGROUND:

i. SPECIAL BUILDING INSPECTION SERVICES SHALL BE PROVIDED FOR THIS BUILDING IN ACCORDANCE TO FLORENCE, SOUTH CAROLINA ADMINISTRATIVE CODE AND POLICIES BY STATE LICENSED BUILDING INSPECTOR OR THEIR AUTHORIZED REPRESENTATIVE. THE PURPOSE OF SPECIAL BUILDING INSPECTIONS IS TO OBSERVE THE STRUCTURAL PORTION OF THE CONSTRUCTION WORK TO VERIFY THAT SUCH WORK IS IN SUBSTANTIAL CONFORMANCE WITH THE CONSTRUCTION DOCUMENTS. INSPECTIONS SHALL BE PERFORMED IN ACCORDANCE WITH THIS STRUCTURAL INSPECTION PLAN. SPECIAL BUILDING INSPECTION SERVICES ARE NOT PART OF THE DESIGN SCOPE AND THESE SERVICES SHALL BE UNDER A SEPARATE CONTRACT.

b. DEFINITIONS:

i. CONSTRUCTION DOCUMENT: PERMITTED PLANS, PROJECT SPECIFICATIONS ASSOCIATED ADDENDA,SUPPLEMENTS, REQUESTS FOR INFORMATION AND ANY DOCUMENTED REVISIONS TO THE STRUCTURAL DRAWINGS AS THEY MAY OCCUR FROM TIME TO TIME.

II. STRUCTURAL INSPECTION PLAN: THE PLAN FILLED FOR PUBLIC RECORD BY THE ENGINEER OF RECORD TO THE ENFORCING AGENCY TO PROVIDE SPECIFIC INSPECTION PROCEDURES AND SCHEDULES.

III. SPECIAL BUILDING INSPECTOR: A REGISTERED PROFESSIONAL ENGINEER WHO MEETS THE QUALIFICATIONS AND STANDARDS AS ESTABLISHED BY THE FLORENCE, SOUTH CAROLINA BOARD OF ENGINEERS AND AS SPECIFIED IN THIS SPECIAL INSPECTION PLAN QUALIFICATION SECTION.

IV. AUTHORIZED REPRESENTATIVE: A REPRESENTATIVE OF THE SPECIAL BUILDING INSPECTOR WHO UNDERTAKES INSPECTIONS AND SITE VISITS UNDER THE RESPONSIBLE CHARGE OF THE SPECIAL BUILDING INSPECTOR AND WHO MEETS THE REQUIREMENTS AND STANDARDS OF THE FLORENCE, SOUTH CAROLINA BOARD OF ENGINEERS AND AS SPECIFIED IN THIS INSPECTION PLAN. THE REPRESENTATIVE SHALL HAVE A MINIMUM OF THREE YEARS OF EXPERIENCE IN INSPECTION OF SIMILAR STRUCTURES AND SHALL HOLD AN EIT CERTIFICATION.

c. QUALIFICATIONS:

i. SPECIAL BUILDING INSPECTOR: SHALL BE AN ACTIVE FLORENCE, SOUTH CAROLINA REGISTERED PROFESSIONAL ENGINEER. THE SPECIAL BUILDING INSPECTOR SHALL BE CURRENTLY CERTIFIED AS A BUILDING INSPECTOR BY THE FLORENCE, SOUTH CAROLINA BOARD OF ENGINEERS. THE BUILDING INSPECTOR SHALL POSSESS A MINIMUM OF TEN (10) YEARS OF VERIFIABLE EXPERIENCE IN THE INSPECTION OF THE STRUCTURAL SYSTEM BEING USED FOR THE PROJECT. DOCUMENTATION OF THE ABOVE REQUIRED QUALIFICATIONS SHALL BE SUBMITTED TO THE LOCAL ENFORCEMENT AGENCY FOR APPROVAL PRIOR TO COMMENCING WORK.

d. RESPONSIBILITIES OF SPECIAL BUILDING INSPECTOR:

THE SPECIAL BUILDING INSPECTOR SHALL NOT ACCEPT ANY DUTIES OR RESPONSIBILITIES THAT ARE NORMALLY THOSE OF THE CONTRACTOR, ENFORCEMENT AGENCY, ARCHITECT OF RECORD,OR ENGINEER OF RECORD. IT SHALL BE THE RESPONSIBILITY OF THE SPECIAL BUILDING INSPECTOR TO OBSERVE THE STRUCTURAL PORTION OF THE WORK ONLY AND TO REPORT WHETHER THE STRUCTURE IS BEING BUILT IN CONFORMANCE WITH THE CONSTRUCTION DOCUMENTS AND IF NOT,THE LOCATION AND DESCRIPTION OF ANY DEVIATIONS FROM THE CONSTRUCTION DOCUMENTS AND THE REQUIRED CORRECTIVE ACTION TO BE TAKEN BY THE CONTRACTOR. THE SPECIAL BUILDING INSPECTOR SHALL REPORT THE USE OF MATERIALS, EQUIPMENT, OR WORKMANSHIP WHICH DOES NOT CONFORM TO THE CONSTRUCTION DOCUMENTS OR WHICH MAY CAUSE IMPROPER CONSTRUCTION,AS WELL AS ANY REQUESTS FOR INTERPRETATION FROM THE ARCHITECT OR ENGINEER OF RECORD. THE SPECIAL BUILDING INSPECTOR SHALL ALSO REPORT RECOMMENDED REMOVALS FOR CONSTRUCTION WHICH IS PERFORMED WITHOUT INSPECTION AND NOT CAPABLE OF BEING INSPECTED OR TESTED IN PLACE. THE SPECIAL BUILDING INSPECTOR SHALL BE RESPONSIBLE TO THE OWNER AND ENFORCING AGENCY HAVING JURISDICTION FOR THIS PROJECT, SHALL COOPERATE WITH THE CONTRACTOR AND SHALL REFRAIN FROM DIRECTING CONSTRUCTION PERSONNEL.

i. RESPONSIBILITIES OF THE CONTRACTOR: THE CONTRACTOR'S CONTRACTUAL AND STATUTORY OBLIGATIONS ARE IN NO WAY RELIEVED BY THE PRESENCE OF THE SPECIAL BUILDING INSPECTOR. THE CONTRACTOR SHALL BE STRICTLY LIABLE FOR ANY DEVIATION FROM THE CONSTRUCTION DOCUMENTS AND FOR ANY REQUIRED CORRECTIVE ACTIONS THAT ARISE THERE FROM. THE CONTRACTOR SHALL ADVISE THE SPECIAL BUILDING INSPECTOR IN ADVANCE OF CONSTRUCTION SCHEDULES AND PLANNED OPERATION IN ORDER TO ASSURE TIMELY AND APPROPRIATE OBSERVATIONS. A MINIMUM OF TWENTY-FOUR (24) HOURS NOTICE SHALL BE PROVIDED FOR ALL REQUESTED INSPECTIONS. THE CONTRACTOR SHALL COOPERATE WITH AND ASSIST THE SPECIAL BUILDING INSPECTOR, OR HIS AUTHORIZED REPRESENTATIVE,IN PERFORMING HIS INSPECTION DUTIES. THE SPECIAL BUILDING INSPECTOR SHALL HAVE FREE ACCESS TO THE PROJECT AT ALL TIMES. THE CONTRACTOR SHALL, UPON BEING INFORMED BY THE SPECIAL BUILDING INSPECTOR, IMMEDIATELY CAUSE TO ELIMINATE REPORTED DISCREPANCIES AND DEVIATIONS.

ii. RESPONSIBILITIES OF THE OWNER: THE OWNER SHALL ARRANGE FOR ALL NECESSARY CONSTRUCTION RECORDS TO BE PROVIDED TO THE SPECIAL BUILDING INSPECTOR IN A TIMELY FASHION. THESE CONSTRUCTION RECORDS, AS A MINIMUM, SHALL CONSIST OF THE CONSTRUCTION DOCUMENTS,RELEVANT SHOP DRAWINGS, APPLICABLE SUBMITTALS, ENGINEERING CONSULTANT REPORTS AND OTHER RELATED ITEMS.

e. PROCEDURES:

i. FREQUENCY OF INSPECTIONS: THE SPECIAL BUILDING INSPECTOR SHALL PERFORM SITE VISITS AT A FREQUENCY AS REQUIRED TO CONFIRM THAT INSPECTIONS ARE BEING PERFORMED BY HIMSELF AND/OR HIS AUTHORIZED REPRESENTATIVE(S) IN ACCORDANCE WITH THIS INSPECTION PLAN.THE SPECIAL BUILDING INSPECTOR SHALL PERSONALLY PERFORM A MINIMUM OF NO LESS THAN 15 PERCENT OF THE TOTAL NUMBER OF INSPECTIONS.

ii. REPORTING REQUIREMENTS: THE SPECIAL BUILDING INSPECTOR SHALL MAINTAIN A RECORD OF THE PROGRESS, WORKING CONDITIONS, AND ANY OBSERVATIONS OF DEVIATIONS FROM THE CONSTRUCTION DOCUMENTS. EACH REPORT SHALL CONTAIN, AS A MINIMUM, THE PROJECT NAME AND LOCATION, BUILDING PERMIT NUMBER, NAME OF INDIVIDUALS PRESENT, DATE, TIME OF INSPECTION, WEATHER, CONTRACTOR'S NAME, THE NAME OF THE INDIVIDUAL PREPARING THE REPORT, OBSERVATIONS, DEVIATIONS, PRESCRIBED CORRECTIVE ACTIONS AND ANY CHANGES MADE IN THE FIELD. THE SPECIAL BUILDING INSPECTOR SHALL MAINTAIN A DEFICIENCY LOG WITH A REQUIRED CORRECTIVE ACTION COLUMN FOR EACH DEFICIENT ITEM ON A CONTINUING BASIS FOR FOLLOW-UP AND UPDATE IT AS EXCEPTIONS ARE RECTIFIED. AT THE CONCLUSION OF EACH INSPECTION, THE SPECIAL BUILDING INSPECTOR (OR AUTHORIZED REPRESENTATIVE) SHALL IMMEDIATELY INFORM THE CONTRACTOR OF ALL OBSERVED DEFICIENCIES REQUIRING CORRECTION, AND OF SPECIFIC CORRECTIVE ACTIONS THAT ARE REQUIRED. A WRITTEN SIGNED AND SEALED INSPECTION REPORT SHALL BE CREATED FOR EACH INSPECTION THAT IS CONDUCTED. AS A MINIMUM, THESE WRITTEN REPORTS SHALL BE SUBMITTED AT LEAST ONCE A MONTH TO THE FOLLOWING PERSONS/ AGENCIES: CITY BUILDING DEPARTMENT, ARCHITECT, ENGINEER OF RECORD,CONTRACTOR AND OWNER.

f. SUBMISSIONS:

i. SUBMISSIONS FOR APPROVAL BY SEOR: SUBMISSIONS (I.E. CONCRETE MIX DESIGNS, REINFORCING, PRECAST ELEMENTS, STRUCTURAL STEEL, SHORING/ RE-SHORING, MASONRY UNITS, ENGINEERED METAL OR WOOD TRUSSES ETC.) SHALL BE REVIEWED AND APPROVED BY THE CONTRACTOR, ARCHITECT AND ENGINEER OF RECORD AND SHALL BEAR THE SEAL,DATE,AND SIGNATURE OF THE SPECIALITY ENGINEER WHEN APPLICABLE PRIOR TO TRANSMITTAL TO THE SPECIAL INSPECTOR FOR HIS USE IN THE INSPECTIONS OF THE STRUCTURE. THE REVIEW OF SUBMISSIONS BY THE SPECIAL INSPECTOR DOES NOT RELIEVE THE CONTRACTOR OR SUBCONTRACTORS OF THEIR OBLIGATIONS OR PERFORMANCE.

ii. ALTERNATES: SUBMISSIONS FOR ALTERNATES AS PROVIDED BY THE CONTRACTOR OR DESIGN PROFESSIONALS AND DOCUMENTATION REGARDING ACCEPTANCE OR DENIAL OF ALTERNATES SHALL BE PROVIDED TO THE SPECIAL INSPECTOR AS THEY BECOME AVAILABLE.

g. COMPLETION STATEMENT:

i. IN ACCORDANCE WITH TINLEY PARK, IL SPECIAL INSPECTOR WILL PREPARE FOLLOWING STATEMENT, SIGNED AND EMBOSSED WITH HIS PROFESSIONAL SEAL: "TO THE BEST OF MY KNOWLEDGE AND BELIEF, STRUCTURAL LOAD-BEARING COMPONENTS WERE CONSTRUCTED IN SUBSTANTIAL ACCORDANCE WITH THE PERMITTED DOCUMENTS AND THE SHORING AND RESHORING PLANS SUBMITTED TO THE "ENFORCING AGENCY."

h. LIMITATIONS:

i. THIS STRUCTURAL INSPECTION PLAN SPECIFIES MINIMUM REQUIREMENTS ONLY AND MAY BE SUPPLEMENTED BY SPECIAL REQUIREMENTS AS THEY ARE DETERMINED NECESSARY DURING THE COURSE OF THE WORK. THE FOLLOWING SECTIONS OUTLINE THE INDIVIDUAL COMPONENTS OF THE STRUCTURAL INSPECTION PLAN AND ANY SPECIAL SUBMISSION REQUIREMENTS UNIQUE TO THIS PARTICULAR PROJECT. SPECIAL BUILDING INSPECTIONS ARE LIMITED TO STRUCTURAL COMPONENTS ONLY AND SHALL NOT INCLUDE INSPECTION OF ANY SAFETY PROVISIONS AS REQUIRED BY OSHA OR OTHER SAFETY STANDARDS WHICH APPLY DURING THE CONSTRUCTION PERIOD. SPECIAL BUILDING INSPECTIONS SHALL NOT INCLUDE NON-STRUCTURAL COMPONENTS, GLASS, METAL OR WOOD RAILINGS, FIRE PROTECTION, BATHROOM PARTITIONS OR FIXTURES, ROOFING, MECHANICAL/ELECTRICAL SYSTEMS, ARCHITECTURAL COMPONENTS, SITE WORK, OR OTHER ELEMENTS NOT CONTRIBUTING TO THE CAPACITY OF THE STRUCTURAL BUILDING FRAME. THE SPECIAL BUILDING INSPECTOR DOES NOT CERTIFY THAT THE CONSTRUCTION DOCUMENTS ARE, IN THEMSELVES, IN COMPLIANCE WITH THE CURRENT EDITION OF THE APPLICABLE BUILDING CODES. ALL STATEMENTS ISSUED WILL REFER TO COMPLETED WORK BEING IN SUBSTANTIAL ACCORDANCE WITH THE CONSTRUCTION DOCUMENTS RATHER THAN THE APPROPRIATE BUILDING CODE.

2. SPECIAL INSPECTION PLAN - GENERAL INFORMATION:

a. SHALLOW FOUNDATION: ISOLATED AND CONTINUOUS FOOTINGS.
b. GROUND FLOOR: CONCRETE SLAB ON GRADE.
c. FRAME: GROUND TO ROOF LEVEL IS CFS LOAD BEARING WALL OR STRUCTURAL STEEL BEAMS/COLUMNS SUPPORTING HOLLOW CORE PLANK LABS WITH TOPPING SLABS. ROOF IS ALSO HOLLOW CORE PLANK SLAB SYSTEM WITH LIGHT GAUGE METAL PARAPET WALLS ATTACHED TO IT.
d. OTHER COMPONENTS: IN-FILL LIGHT GAGE METAL STRUCTURAL COMPONENTS.e. CONSTRUCTION SHALL CONFORM TO THE PERMITTED DOCUMENTS AS SUBMITTED TO THE BUILDING DEPARTMENT. STRUCTURAL DRAWINGS AND THE APPLICABLE SPECIFICATIONS SHALL GOVERN THE REQUIREMENTS OF THIS WORK.

3. SUBSURFACE AND FOUNDATIONS:

a. SOILS INVESTIGATION:

i. THIS BUILDING SHALL HAVE A SOILS INVESTIGATION COMPLETED BY A QUALIFIED TESTING LABORATORY PRIOR TO THE COMMENCEMENT OF FOUNDATION INSTALLATION. OBTAIN A COPY OF A SOILS REPORT, INCLUDING ADDENDUM'S AND/OR TEST BORINGS AS MAY BE APPROPRIATE, SIGNED AND SEALED BY A REGISTERED TINLEY PARK, IL MAINTAIN SAID COPY IN THE SPECIAL INSPECTOR'S FILE. THE SPECIAL INSPECTOR SHALL CONFIRM THAT NOTES REGARDING FOUNDATION PREPARATION AND INSTALLATION CONTAINED WITHIN SUCH SOILS REPORT AND/OR CONTRACT DOCUMENTS PRIOR TO INITIATION OF FOUNDATION OPERATIONS.

ii. SPECIAL INSPECTIONS FOR EXISTING SITE SOIL CONDITIONS, FILL PLACEMENT AND LOAD-BEARING REQUIREMENTS SHALL BE AS REQUIRED BY THIS SECTION AND TABLE 1704.7. THE APPROVED GEO TECHNICAL REPORT AND THE CONSTRUCTION DOCUMENTS PREPARED BY THE REGISTERED DESIGN PROFESSIONALS SHALL BE USED TO DETERMINE COMPLIANCE. DURING FILL PLACEMENT, THE SPECIAL INSPECTOR SHALL DETERMINE THAT PROPER MATERIALS AND PROCEDURES ARE USE IN ACCORDANCE WITH THE PROVISIONS OF THE APPROVED GEO TECHNICAL REPORT.

b. BACKFILL, COMPACTION AND SURCHARGE PROGRAM:

i. A QUALIFIED GEO TECHNICAL CONSULTANT SHALL BE RETAINED TO MONITOR THE SHALLOW FOUNDATIONS, SLAB-ON-GRADE BASE BACKFILL AND COMPACTION OPERATIONS. A REGISTERED TINLEY PARK, IL SIGNED AND SEALED REPORTS SHALL BE SUBMITTED TO THE SPECIAL INSPECTOR.

ii. A SIGNED AND SEALED REPORT FROM THE GEO TECHNICAL ENGINEER OF RECORD STATING THAT THE SURCHARGE PROGRAM HAS BEEN SUCCESSFULLY COMPLETED SHALL BE SUBMITTED TO THE SPECIAL INSPECTOR PRIOR TO INITIATION OF FOUNDATION OPERATIONS.

c. SHALLOW FOUNDATIONS:

i. FOUNDATIONS SHALL BE REVIEWED PRIOR TO AND DURING THE PLACEMENT OF CONCRETE TO CONFIRM COMPLIANCE WITH THE STRUCTURAL DOCUMENTS.

ii. VERIFY DOWELS FOR VERTICAL REINFORCING ARE IN PLACE AND ARE IN ACCORDANCE WITH THE STRUCTURAL DRAWINGS.

iii. OBSERVE CONCRETE PLACING TO ASSURE THAT METHODS AND MATERIALS BEING USED ARE IN ACCORDANCE WITH THE CONSTRUCTION DOCUMENTS

d. SLAB ON GRADE:

i. SUB GRADE PREPARATION (BACKFILL, COMPACTION AND OBSERVATION AND VERIFICATION OF COMPACTION TESTING) SHALL BE OBSERVED.

ii. OBSERVE PLACEMENT OF SCREEDS TO OBTAIN PROPER LEVEL AND THICKNESS OF SLAB. VERIFY SLAB STEP DOWNS AND DEPRESSIONS TO COMPLY WITH PLAN.

iii. VERIFY SIZE, TYPE AND LOCATION OF ALL SLAB REINFORCING INCLUDING LAP AND PROPER PLACEMENT.

iv. CHECK AND VERIFY LOCATION AND TIME OF INSTALLATION OF CONTROL AND CONSTRUCTION JOINTS.

4. CONCRETE FORM WORK:

a. OBTAINED DETAILED DRAWINGS AND DESIGN CALCULATIONS (SIGNED AND SEALED BY A STATE REGISTERED PROFESSIONAL ENGINEER WITH 3 YEARS EXPERIENCE IN THE DESIGN OF SHORING AND RE-SHORING FOR SIMILAR STRUCTURES) FOR A SHORING AND RESHORING REQUIRED.

b. VERIFY FORM WORK IS FREE OF FOREIGN MATERIAL AND LOCATIONS, ALIGNMENT AND DIMENSIONS CONFORM TO THE STRUCTURAL DRAWINGS PRIOR TO PLACING CONCRETE. PERIODICALLY INSPECT SHORING AND RESHORING TO NOTE ANY POTENTIALLY DANGEROUS CONDITIONS. REVIEW SEQUENCE AND REMOVAL PROCEDURES WITH THE APPROVED SHOP DRAWINGS.

c. VERIFY LOCATION AND TYPES OF JOINTS AS INDICATED ON THE STRUCTURAL DRAWINGS.

d. OBSERVE EXPANSION JOINTS AND EMBEDDED ITEMS FOR TYPE, QUALITY OF FABRICATION AND GENERAL PLACEMENT.

e. OBSERVE IN-PLACE CONDITION OF CAST-IN PLACE CONCRETE (CRACKING, SPALLING, HONEY COMBING, ETC.) AND RECORD ANY SIGNIFICANT DEFICIENCIES.

f. VERIFY PROPER USAGE OF EXPANSION ANCHORS, CHEMICAL ADHESIVE PRODUCTS FOR ANCHORAGE AND POWDER ACTUATED FASTENERS IN ACCORDANCE WITH MANUFACTURERS RECOMMENDATIONS. OBSERVATION INSTALLATION METHODS TO ENSURE SPECIFICATION COMPLIANCE FOR ANCHOR EMBEDMENT DEPTH, SPACING AND EDGE DISTANCE.

5. REINFORCING STEEL

a. VERIFY GRADE, SIZE AND QUANTITY OF SPACING OF REINFORCING BARS FOR COMPLIANCE WITH CONTRACT DOCUMENTS AS WELL AS APPROVED SHOP DRAWINGS. WELD ABILITY OF REINFORCEMENT, EXCEPT THAT WHICH CONFORMS TO ASTM A 706, SHALL BE DETERMINED IN ACCORDANCE WITH THE REQUIREMENTS OF SECTION 3.5.2 OF ACI 318.
b. VERIFY ALL STEEL PLACEMENT IS IN ACCORDANCE WITH ACI FOR CLEAR COVER AND THAT IT IS ADEQUATELY SUPPORTED TO RESIST MOVEMENT DURING CONCRETE POUR.
c. MILD STEEL REINFORCING SHALL BE FREE OF RUST SCALE, OIL OR MATERIAL THAT MAY INHIBIT CONCRETE BOND AND SHOULD BE CHECKED FOR SIZE, BENDING, GRADE AND SPLICE LENGTH.
d. OBSERVE REINFORCING STEEL SIZE, NUMBER, PLACEMENT AND SUPPORT.
e. VERIFY ALL SPLICE LOCATIONS AND LAP LENGTHS. REPORT ALL SPLICES AND LAPS THAT ARE NOT IN STRICT ACCORDANCE WITH THE DESIGN DOCUMENTS.
f. WELDING INSPECTION AND WELDING INSPECTOR QUALIFICATION FOR REINFORCING STEEL SHALL BE IN ACCORDANCE WITH AWS D1.4 AND ACI 318.

6. OPENINGS:

a. GENERAL OPENING LOCATIONS SHALL BE VERIFIED FOR SIZE, LOCATION AND REINFORCED AS INDICATED ON THE STRUCTURAL DRAWINGS.
b. OPENINGS SHALL NOT INTERFERE WITH OR INTERRUPT SCHEDULED REINFORCING WITHOUT THE APPROVAL OF THE STRUCTURAL ENGINEER

7. EMBEDDED FIXTURES:

a. VERIFY EMBEDDED ITEMS ARE IN PLACE AND GENERALLY LOCATED DIMENSIONALLY AS INDICATED ON THE APPROVED SHOP DRAWINGS. ANCHOR BOLTS, INSERTS, SLEEVES, CONDUITS, OR OTHER EMBEDDED FIXTURES ARE CONSIDERED SECONDARY ELEMENTS AND SHALL NOT INTERFERE OR INTERRUPT PRIMARY SCHEDULED REINFORCING UNLESS APPROVED BY THE STRUCTURAL ENGINEER.

8. STRUCTURAL STEEL:

a. THE SPECIAL INSPECTIONS FOR STEEL ELEMENTS OF BUILDINGS AND STRUCTURES SHALL BE AS REQUIRED BY SECTION 1705.2.1
b. ENSURE PROPER USE OF APPROVED STRUCTURAL STEEL MATERIALS AND PRODUCTS BY VERIFYING ASTM IDENTIFICATION MARKINGS AND INSPECTING MANUFACTURER'S CERTIFICATE OF COMPLIANCE.
c. CHECK THE INSTALLATION OF ALL COLUMN BASE PLATES FOR PROPER LEVELING, GROUT TYPE AND GROUT PLACEMENT.
d. VISUALLY CHECK PLUMBNESS AND ALIGNMENT (USING ADEQUATE TOOLS FOR VERIFICATION) AS ERECTION PROGRESSES.
e. CHECK ALL REQUIRED CAMBER AGAINST APPROVED SHOP DRAWINGS AND CONTRACT DOCUMENTS.
f. VISUALLY INSPECT 100% OF THE STEEL CONNECTIONS TO VERIFY COMPLIANCE WITH APPROVED SHOP DRAWINGS AND CONTRACT DOCUMENTS.
g. INSPECT HIGH STRENGTH BOLTED CONNECTIONS FOR COMPLIANCE WITH CONTRACT DOCUMENTS.
h. INSPECT WELDED CONNECTIONS USING THE APPLICABLE NON-DESTRUCTIVE TECHNIQUES NECESSARY TO ENSURE PROJECT COMPLIANCE. VERIFY WELDER CERTIFICATIONS.
i. INSPECT METAL DECK WELDS AND ROOF DECK WELDS.
j. INSPECT STEEL FRAME JOINT DETAILS SUCH AS BRACING AND STIFFENING, MEMBER LOCATIONS AND APPLICATION OF JOINT DETAILS AT CONNECTIONS FOR COMPLIANCE WITH PROJECT REQUIREMENTS

9. BOLTING

a. INSTALLATION OF HIGH-STRENGTH BOLTS SHALL BE INSPECTED IN ACCORDANCE WITH AISC 360.
b. WHILE THE WORK IS IN PROGRESS, THE SPECIAL INSPECTOR SHALL DETERMINE THAT THE REQUIREMENTS FOR BOLTS, NUTS, WASHERS AND PAINT; BOLTED PARTS AND INSTALLATION AND TIGHTENING IN SUCH STANDARDS ARE MET. FOR BOLTS REQUIRING PRE TENSIONING, THE SPECIAL INSPECTOR SHALL OBSERVE THE PRE INSTALLATION TESTING AND CALIBRATION PROCEDURES WHEN SUCH PROCEDURES ARE REQUIRED BY THE INSTALLATION METHOD OR BY PROJECT PLANS OR SPECIFICATIONS; DETERMINE THAT ALL PLIES OF CONNECTED MATERIALS HAVE BEEN DRAWN TOGETHER AND PROPERLY SNUGGED AND MONITOR THE INSTALLATION OF BOLTS TO VERIFY THAT THE SELECTED PROCEDURE FOR INSTALLATION IS PROPERLY USED TO TIGHTEN BOLTS. FOR JOINTS REQUIRED TO BE TIGHTENED ONLY TO THE SNUG-TIGHT CONDITION, THE SPECIAL INSPECTOR NEED ONLY VERIFY THAT THE CONNECTED MATERIALS HAVE BEEN DRAWN TOGETHER AND PROPERLY SNUGGED.
c. MONITORING OF BOLT INSTALLATION FOR PRE TENSIONING IS PERMITTED TO BE PERFORM ON A PERIODIC BASIS WHEN USING THE TURN-OF-NUT METHOD WITH MATCH MARKING TECHNIQUES, THE DIRECT TENSION INDICATOR METHOD OR THE ALTERNATE DESIGN FASTENER (TWIST-OFF BOLT) METHOD. JOINTS DESIGNATED AS SNUG TIGHT NEED BE INSPECTED ONLY ON A PERIODIC BASIS.
d. MONITORING OF BOLT INSTALLATION FOR PRE TENSIONING USING THE CALIBRATED WRENCH METHOD OR THE TURN-OF-NUT METHOD WITHOUT MATCH MARKING SHALL BE PERFORMED ON A CONTINUOUS BASIS.
e. REFERENCE TABLE BELOW FOR ADDITIONAL REQUIREMENTS.

10. CONCRETE PLACEMENT:

a. ENSURE THAT THE TESTING LABORATORY TECHNICIANS ARE AWARE OF SCHEDULING CONCRETE PLACEMENT AND TESTING REQUIREMENTS.

b. IN THE ABSENCE OF SUFFICIENT DATA OR DOCUMENTATION PROVIDING EVIDENCE OF CONFORMANCE TO QUALITY STANDARDS FOR MATERIALS IN CHAPTER 3 OF ACI 318, THE BUILDING OFFICIAL SHALL REQUIRE TESTING OF MATERIALS IN ACCORDANCE WITH THE APPROPRIATE STANDARDS AND CRITERIA FOR THE MATERIAL IN CHAPTER 3 OF ACI 318.

c. INSPECTING ALL TRANSIT MIX DELIVERY SLIPS TO VERIFY CORRECT MIX DESIGNS AS WELL AS ELAPSED TIME BETWEEN PLAN AND DEPOSIT OF CONCRETE.

d. VERIFY SLUMP IS WITHIN THE LIMITS OF THE PROJECT DOCUMENTS.

e. VERIFY THAT THE CONCRETE TEST CYLINDERS ARE TAKEN IN ACCORDANCE WITH THE CONTRACT DOCUMENTS.

f. OBSERVE CONVEYING AND DEPOSITING OF CONCRETE TO ENSURE PROPER PLACEMENT TECHNIQUES (FOR ALL CONCRETE POURS) INCLUDING THE SHORING AND FORM WORK.

g. OBSERVE IN-PLACE CONDITION OF CAST-IN PLACE CONCRETE (CRACKING, SPALLING, HONEYCOMBING, ETC.) AND RECORD ANY SIGNIFICANT DEFICIENCIES.

h. OBSERVE AND VERIFY PROPER CURING AND POST PLACEMENT PROTECTION PROVISIONS.

i. OBSERVE AND VERIFY PROPER IMPLEMENTATION AND USE OF CORROSION INHIBITING ADMIXTURES.

j. OBSERVE PLACEMENT OF LIGHTWEIGHT CONCRETE FOR COMPLIANCE WITH PROJECT SPECIFICATIONS.

k. REVIEW RESULTS OF FIELD TESTED CONCRETE TEST CYLINDERS WITH THE TESTING LABORATORY TO CHECK COMPLIANCE.

l. REFERENCE TABLE BELOW FOR ADDITIONAL REQUIREMENTS.

JS ARCHITECTS
9726 E. 42nd St. Suite 153, Tulsa, 74146
918.640.6800 - jhnsanford@aol.com

COPYRIGHT 2026 John Sanford

6-08-2026

NOT VALID FOR CONSTRUCTION UNLESS SIGNED IN THIS BLOCK

DEVELOPED BY
HI-TECH HOSPITALITY

Residence INN BY MARRIOTT

RESIDENCE INN BY MARRIOTT

NW CORNER OF PINE & MEMORIAL, TULSA, OK

THESE DRAWINGS ARE INTENDED FOR REVIEW AND PERMITTING. DRAWINGS ARE NOT TO BE USED FOR CONSTRUCTION WITHOUT ARCHITECT'S AND ENGINEER'S SIGNATURE AND THEIR DATE OF ISSUE FOR CONSTRUCTION.

TULSA AIRPORT RIBM
61208
Project Number

No.	Description	Date

SHEET
S103
STRUCTURAL NOTES

TABLE 1705.3				
REQUIRED VERIFICATION AND INSPECTION OF CONCRETE CONSTRUCTION				
VERIFICATION AND INSPECTION	CONTINUOUS	PERIODIC	REFERENCED STANDARD a	IBC REF.
1. INSPECTION OF REINFORCING STEEL, INCLUDING PRESTRESSING TENDONS AND PLACEMENT.	-	X	ACI 318: 3.5, 7.1-7.7	1910.4
2. INSPECTION OF REINFORCING STEEL WELDING IN ACCORDANCE WITH TABLE 1705.2.2, ITEM 2B.	-	-	AWS D1.4 ACI 318: 3.5.2	-
3. INSPECTION OF BOLTS TO BE INSTALLED IN CONCRETE PRIOR TO AND DURING PLACEMENT OF CONCRETE WHERE ALLOWABLE LOADS HAVE BEEN INCREASED OR WHERE STRENGTH DESIGN IS USED.	-	X	ACI 318: 8.1.3, 21.1.8	1908.5, 1909.1
4. INSPECTION OF ANCHORS INSTALLED IN HARDENED CONCRETE.	-	X	ACI 318: 3.8.6, 8.1.3, 21.2.8	1912.1
5. VERIFYING USE OF REQUIRED DESIGN MIX.	-	X	ACI 318: CH 4, 5.2-5.4	1904.3, 1913.2, 1913.3
6. AT THE TIME FRESH CONCRETE IS SAMPLED TO FABRICATE SPECIMENS FOR STRENGTH TESTS, PERFORM SLUMP AND AIR CONTENT TESTS, AND DETERMINE THE TEMPERATURE OF THE CONCRETE.	X	-	ASTM C 172 ASTM C 31 ACI 318: 5.6, 5.8	1913.1
7. INSPECTION OF CONCRETE AND SHORTCRETE PLACEMENT FOR PROPER APPLICATION TECHNIQUES.	X	-	ACI 318: 5.9, 5.10	1913.6, 1913.7, 1913.8
8. INSPECTION FOR MAINTENANCE OF SPECIFIED CURING TEMPERATURE AND TECHNIQUES.	-	X	ACI 318: 5.11-5.13	1910.9
9. VERIFICATION OF IN-SITU CONCRETE STRENGTH, PRIOR TO STRESSING OF TENDONS IN POST-TENSIONED CONCRETE AND PRIOR TO REMOVAL OF SHORES AND FORMS FROM BEAMS AND STRUCTURAL SLABS.	-	X	ACI 318: 6.2	-
10. INSPECT FORM WORK FOR SHAPE, LOCATION ANDDIMENSIONS OF THE CONCRETE MEMBER BEING FORMED	-	X	ACI 318: 6.1.1	-
FOR SI: 1 INCH = 25.4 MM.				
a. WHERE APPLICABLE, SEE ALSO SECTION 1707.1, SPECIAL INSPECTION FOR SEISMIC RESISTANCE.				

11. WELDING

WELDING INSPECTION AND WELDING INSPECTOR QUALIFICATION SHALL BE IN ACCORDANCE WITH THIS SECTION.

TABLE N5.6-2		
INSPECTION TASK PRIOR TO BOLTING	QC	QA
FASTENER ASSEMBLIES OF SUITABLE CONDITION, PLACED IN ALL HOLES AND WASHERS (IF REQUIRED) ARE POSITIONED AS REQUIRED	O	O
JOINT BROUGHT TO THE SNUG-TIGHT CONDITION PRIOR TO PRETENSIONING OPERATION	O	O
FASTENER COMPONENT NOT TURNED BY THE WRENCH PREVENTED FROM ROTATING	O	O
FASTENER ARE PRETENSIONED IN ACCORDANCE WITH THE RCSC SPECIFICATION,PROGRESSING SYSTEMATICALLY FROM THE MOST RIGID POINT TOWARD THE FREE EDGE	O	O

TABLE N5.6-2		
INSPECTION TASK PRIOR TO BOLTING	QC	QA
DOCUMENT ACCEPTANCE OR REJECTION OF ALL BOLTED CONNECTIONS	P	P

TABLE N5.4-1		
INSPECTION TASK PRIOR TO WELDING	QC	QA
WELDING PROCEDURES SPECIFICATION (WPS) IS AVAILABLE	P	P
MANUFACTURER CERTIFICATIONS FOR WELDING CONSUMABLES ARE AVAILABLE	P	P
MATERIAL IDENTIFICATION (TYPE/GRADE)	O	O
WELDER IDENTIFICATION SYSTEM	O	O
FIT-UP OF GROOVE WELDS (INCLUDING JOINT GEOMETRY) • JOINT PREPARATION • DIMENSIONS (ALIGNMENT, ROOT OPENING, ROOT FACE, BEVEL) • CLEANLINESS (CONDITION OF STEEL SURFACES) • TACKING (TACK WELD QUALITY AND LOCATION • BACKING TYPE AND FIT (IF APPLICABLE)	O	O
CONFIGURATION AND FINISH OF ACCESS HOLES	O	O
FIT-UP OF FILLET WELDS • DIMENSIONS (ALIGNMENT, GAPS AT ROOT) • CLEANLINESS (CONDITION OF STEEL SURFACES) • TACKING (TACK WELD QUALITY AND LOCATION)	O	O
CHECK WELDING EQUIPMENT	O	-
THE FABRICATOR OR ERECTOR, AS APPLICABLE, SHALL MAINTAIN A SYSTEM BY WHICH A WELDER WHO HAS WELDED A JOINT OR MEMBER CAN NE IDENTIFIED. STAMPS, IF USED, SHALL BE THE LOW-STRESS TYPE.		

TABLE N5.4-2		
INSPECTION TASK DURING WELDING	QC	QA
USE OF QUALIFIED WELDERS	O	O
CONTROL AND HANDLING OF WELDING CONSUMABLES • PACKAGING • ELECTRODE ATMOSPHERIC EXPOSURE CONTROL	O	O
NO WELDING OVER CRACKED TACK WELDS	O	O
ENVIRONMENTAL CONDITIONS • WIND SPEED WITHIN LIMITS • PRECIPITATION AND TEMPERATURE	O	O
WELDING PROCEDURES SPECIFICATION FOLLOWED • SETTINGS ON WELDING EQUIPMENT • TRAVEL SPEED • SELECTED WELDING MATERIALS • SHIELDING GAS TYPE/FLOW RATE • PREHEAT APPLIED • INTER PASS TEMPERATURE MAINTAINED (MIN./MAX.) • PROPER POSITION (F, V, H, OH)	O	O
WELDING TECHNIQUES • INTER PASS AND FINAL CLEANING • EACH PASS WITHIN PROFILE LIMITATIONS • EACH PASS MEETS QUALITY REQUIREMENTS	O	O

TABLE N5.4-3		
INSPECTION TASK DURING WELDING	QC	QA
WELDS CLEANED	O	O
SIZE, LENGTH, AND LOCATION OF ALL WELDS	P	P
WELDS MEET VISUAL ACCEPTANCE CRITERIA • CRACK PROHIBITION • WELD/BASE-METAL FUSION • CRATER CROSS SECTION • WELD PROFILES • WELD SIZE • UNDERCUT • POROSITY	P	P
K-AREA	P	P
BACKING REMOVED AND WELD TABS REMOVED (IF REQUIRED	P	P
REPAIR ACTIVITIES	P	P
DOCUMENT ACCEPTANCE OR REJECTION OF WELDED JOINT OR MEMBERP	P	P
WHEN WELDING OF DOUBLERS PLATES, CONTINUITY PLATES OR STIFFENERS HAS BEEN PERFORMED IN THE K-AREA, VISUALLY INSPECT THE WEB K-AREA FOR CRACKS WITHIN 3 IN. (75MM) OF THE WELD.		

TABLE N5.6-1		
INSPECTION TASK PRIOR TO BOLTING	QC	QA
MANUFACTURER'S CERTIFICATIONS AVAILABLE FOR FASTENER MATERIALS	O	P
FASTENERS MARKED IN ACCORDANCE WITH ASTM REQUIREMENTS	O	O
PROPER FASTENERS SELECTED FOR JOINT DETAIL (GRADE, TYPE, BOLT LENGTH IF THREADS ARE TO BE EXCLUDED FROM SHEAR PLANE)	O	O
PROPER BOLTING PROCEDURE SELECTED FOR JOINT DETAIL	O	O
CONNECTING ELEMENTS, INCLUDING APPROPRIATE FAYING SURFACE CONDITION AND HOLE PREPARATION, IF SPECIFIED, MEET APPLICABLE REQUIREMENTS	O	O
PPRE-INSTALLATION VERIFICATION TESTING BY INSTALLATION PERSONNEL OBSERVED AND DOCUMENTED FOR FASTENER ASSEMBLIES AND METHODS USE	O	P
PROPER STORAGE PROVIDED FOR BOLTS, NUTS, WASHERS, AND OTHER FASTENER COMPONENTS	O	O

TABLE 1705.6 REQUIRED VERIFICATION AND INSPECTION OF SOILS		
VERIFICATION AND INSPECTION TASK	CONTINUOUS DURING TASK LISTED	PERIODICALLY DURING TASK LISTED
VERIFY MATERIALS BELOW SHALLOW FOUNDATIONS ARE ADEQUATE TO ACHIEVE THE DESIGN BEARING CAPACITY	-	X
VERIFY EXCAVATIONS ARE EXTENDED TO PROPER DEPTH AND HAVE REACHED PROPER MATERIAL.	-	X
PERFORM CLASSIFICATION AND TESTING OF COMPACTED FILL MATERIALS.	-	X
VERIFY USE OF PROPER MATERIALS, DENSITIES AND LIFT THICKNESS DURING PLACEMENT AND COMPACTION OF COMPACTED FILL.	X	-
PRIOR TO PLACEMENT OF COMPACTED FILL, OBSERVE SUB GRADE AND VERIFY THAT SITE HAS BEEN PREPARED PROPERLY.	-	X

TABLE 1705.2.2				
REQUIRED VERIFICATION AND INSPECTION OF CONCRETE CONSTRUCTION				
VERIFICATION AND INSPECTION TYPE	CONTINUOUS		PERIODIC	REFERENCED STANDARD
1. MATERIAL VERIFICATION OF COLD-FORMED STEEL DECK:				
A. IDENTIFICATION MARKINGS TO CONFORM TO ASTM STANDARDS SPECIFIED IN THE APPROVED CONSTRUCTION DOCUMENTS	-		X	APPLICABLE ASTM MATERIAL STANDARDS
B. MANUFACTURER'S CERTIFIED TEST REPORTS.	-		X	
2. SPECIAL INSPECTION OF WELDING:				
A. COLD-FORMED STEEL DECK				
1. FLOOR AND ROOF DECK WELDS	-		X	AWS D1.3
B. REINFORCING STEEL:				
1. VERIFICATION OF WELD ABILITY OF REINFORCING STEEL OTHER THAN ASTM A 706	-		X	
2. REINFORCING STEEL RESISTING FLEXURAL AND AXIAL FORCES IN INTERMEDIATE AND SPECIAL MOMENT FRAMES, AND BOUNDARY ELEMENTS OF SPECIAL STRUCTURAL WALLS OF CONCRETE AND SHEAR REINFORCEMENT.		X	-	AWS D1.4 ACI 318 SECTION 3.5.2
3. SHEAR REINFORCEMENT.		X	-	
4. OTHER REINFORCING STEEL		-	X	

WHERE:
O-OBSERVE THESE ITEMS ON A RANDOM BASIS. OPERATIONS NEED NOT BE DELAYED PENDING THESE INSPECTIONS.
P-PERFORM THESE TASKS FOR EACH WELDED JOINT OR MEMBER
QC-QUALITY CONTROL INSPECTOR (FABRICATOR OR ERECTOR)
QA-QUALITY ASSURANCE INSPECTOR

JS ARCHITECTS
9726 E. 42nd St. Suite 153, Tulsa, 74146
918.640.6800 - jhnsanford@aol.com
COPYRIGHT 2026 John Sanford

6-08-2026

NOT VALID FOR CONSTRUCTION UNLESS SIGNED IN THIS BLOCK

DEVELOPED BY
HI-TECH HOSPITALITY
Residence INN BY MARRIOTT

RESIDENCE INN BY MARRIOTT

NW CORNER OF PINE & MEMORIAL, TULSA, OK

THESE DRAWINGS ARE INTENDED FOR REVIEW AND PERMITTING. DRAWINGS ARE NOT TO BE USED FOR CONSTRUCTION WITHOUT ARCHITECT'S AND ENGINEER'S SIGNATURE AND THEIR DATE OF ISSUE FOR CONSTRUCTION.

TULSA AIRPORT RIBM
61208
Project Number

No.	Description	Date

SHEET
S104
STRUCTURAL NOTES

ABBREVIATIONS:

ABV	ABOVE
AFF	ABOVE FINISHED FLOOR
AP	ACCESS PANEL
AC	ACOUSTICAL
ADD	ADDENDUM
ADJ	ADJACENT
ALT	ALTERNATE
ALUM	ALUMINUM
ARCH	ARTCHITECT (URAL)
BASMT	BASEMENT
BRG	BEARING
BVL	BEVELED
BIT	BITUMINUOUS
BLK	BLOCK
BKLG	BLOCKING
BOT	BOTTOM
BLDG	BUILDING
CPT	CARPET (ED)
CSMT	CASEMENT
C	CAULK (ING)
CLG	CEILING
CT	CERAMIC TILE
CFA	COLUMN FROM ABOVE
CLR	CLEAR
COL	COLUMN
CONC	CONCRETE
CMU	CONCRETE MASONRY UNIT
CONST	CONSTRUCTION
CONT	CONTINUOUS
CJT	CONTROL JOINT
CPR	COPPER
CUST	CUSTOM
DT	DRAERY TROUGH
DTL	DETAIL
DIM	DIMENSION
DR	DOOR
DWG	DRAWING
DF	DRINKING FOUNTAIN
ELEC	ELECTRIC (AL)
EL	ELEVATION (S)
ELEV	ELEVATOR
EQ	EQUAL
EXH	EXHAUST
EXG	EXISTING
EXT	EXTERIOR
FOC	FACE OF CONCRETE
FOF	FACE OF FINISH
FOM	FACE OF MASONRY
FOS	FACE OF STUDS
FIN	FINISH (ED)
FFL	FINISHED FLOOR LEVEL
FE	FIRE EXTINGUISHER
FDC	FIRE DEPARTMENT CONNECTION
FHC	FIRE HOSE CONNECTION
FEC	FIRE EXTINGUISHER CABINET
FPL	FIREPLACE
FP	FIREPROOFING, SPRAYED
FLG	FLASHING
FLR	FLOOR (ING)
FD	FLOOR DRAIN
FTG	FOOTING
FDTN	FOUNDATION
FBO	FURNISHED BY OTHERS
FPHB	FREEZE PROOF HOSE BIB
FUR	FURRED (ING)
GA	GAUGE
GALV	GALVANIZED
GC	GENERAL CONTRACT (OR)
GL	GLASS, GLAZING
GYP BD	GYPSUM BOARD
HB	HOSE BIB
HDW	HARDWARE
HDR	HEADER
HT	HEATING
HC	HOLLOW CORE
HM	HOLLOW METAL
HOR	HORIZONTAL
HWH	HOT WATER HEATER
INCL	INCLUDE (D), (ING)
ID	INSIDE DIAMETER
IBC	INSTALLED BY CONTRACTOR
IBO	INSTALLED BY OWNER
INS	INSULATE (D), (ION)
INT	INTERIOR
JC	JANITOR'S CLOSET
KIT	KITCHEN
LAM	LAMINATE (D)
LAV	LAVATORY
LH	LEFT HAND
LHR	LEFT HAND REVERSE
L	LENGTH

LDT	LIGHT AND DRAPERY TROUGH
LT	LIGHT TROUGH
LTL	LINTEL
LVL	LEVEL
LVR	LOUVER
MH	MANHOLE
MFR	MANUFACTUR (ER)
MO	MASONRY OPENING
MAT	MATERIAL
MAX	MAXIMUM
MECH	MECHANIC (AL)
MC	MEDICINE CABINET
MMB	MEMBRANE
MTL	METAL
M	METER (S)
MM	MILLIMETER (S)
MIN	MINIMUM
MIR	MIRROR
MISC	MISCELLANEOUS
MULL	MULLION
NAT	NATURAL
NR	NOISE REDUCTION
NOM	NOMINAL
NIC	NOT IN CONTRACT
NTS	NOT TO SCALE
OPG	OPENING
OPP	OPPOSITE
OPH	OPPOSITE HAND
OH	OVERHEAD
PR	PAIR
PK	PARKING
PVMT	PAVEMENT
PFA	POST FROM ABOVE
PL	PLASTIC LAMINATE
PT	POINT
PSF	POUNDS PER SQUARE FOOT
PSI	POUNDS PER SQUARE INCH
PL	PROPERTY LINE
QT	QUARRY TILE
REF	REFERENCE
REFR	REFRIGERATOR
REINF	REINFORCE (D), (ING)
REQD	REQUIRED
RES	RESILIENT
REV	REVISION (D), (ING)
REVS	REVERSE
RH	RIGHT HAND
RHR	RIGHT HAND REVERSE
R	RISER
R&S	ROD AND SHELF
RD	ROOF DRAIN
RDT	RECESSED DRAPERY TRACK
RFG	ROOFING
RM	ROOM
RO	ROUGH OPENING
R/S	ROUGH SAWN
S	SEALANT (EXTERIOR)
SHTG	SHEATHING
SM	SHEET METAL
SIM	SIMILAR
SC	SOLID CORE
SPEC	SPECIFICATION (S)
SQ	SQUARE
STD	STANDARD
ST	STAIN
STL	STEEL
SD	STORM DRAIN
STR	STRUCTURAL
TEL	TELEPHONE
TV	TELEVISION
THR	THRESHOLD
T&G	TONGUE AND GROOVE
TS	TOP OF SLAB
TSL	TOP OF STEEL
TW	TOP OF WALL
TB	TOWEL BAR
TR	TRANSOM
T	TREAD
TYP	TYPICAL
UNO	UNLESS NOTED OTHERWISE
VB	VAPOUR BARRIER
VIF	VERIFY IN FIELD
VERT	VERTICAL
VCT	VINYL COMPOSITION
WC	WATER CLOSET
WP	WATERPROOFING
WWF	WELDED WIRE FABRIC
W	WIDTH, WIDE
WDW	WINDOW
WO	WITHOUT
WD	WOOD

JS
ARCHITECTS
9726 E. 42nd St. Suite 153, Tulsa, 74146
918.640.6800 - jhnsanford@aol.com
COPYRIGHT 2026 John Sanford

6-08-2026

NOT VALID FOR CONSTRUCTION UNLESS SIGNED IN THIS BLOCK

DEVELOPED BY
HI-TECH HOSPITALITY
Residence INN BY MARRIOTT

RESIDENCE INN BY MARRIOTT

NW CORNER OF PINE & MEMORIAL, TULSA, OK

THESE DRAWINGS ARE INTENDED FOR REVIEW AND PERMITTING. DRAWINGS ARE NOT TO BE USED FOR CONSTRUCTION WITHOUT ARCHITECT'S AND ENGINEER'S SIGNATURE AND THEIR DATE OF ISSUE FOR CONSTRUCTION.

TULSA AIRPORT RIBM
61208
Project Number

No.	Description	Date

SHEET
S105
STRUCTURAL NOTES

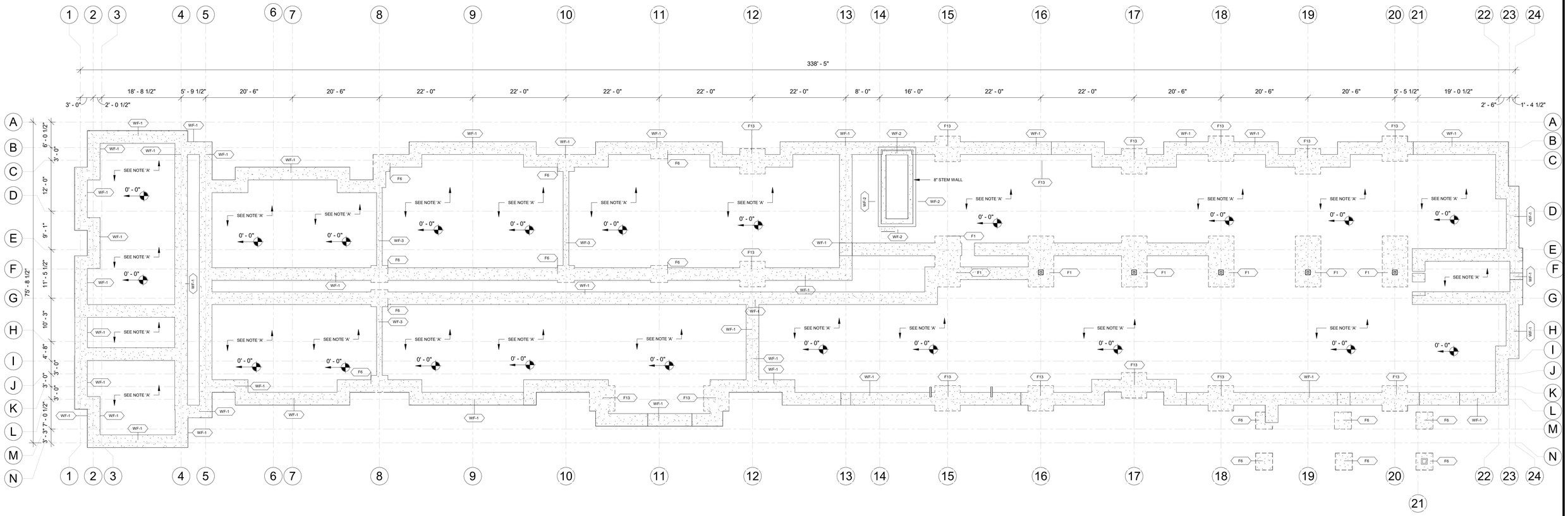

1 FOUNDATION PLAN
3/32" = 1'-0"

FOUNDATION NOTES:

1. ALL SLAB-ON GRADE FLOOR SHALL BE 4" THICK 3000 PSI CONC. SLAB WITH 6X6 W6x6 W2.9x2.9 OVER A 10 MIL. POLY VAPOR BARRIER.
2. VERIFY ALL DIMENSIONS W/ARCHITECHTURAL BEFORE BEGINNING CONSTRUCTION.
3. DIMENSION ON ARCHITECHTURAL DRAWINGS SHALL TAKE PRECEDENT DIMENSION ON STRUCTRAL DRAWINGS.
4. REFER TO ARCH. DRAWINGS FOR OPENING DIMENSIONS NOT SHOWN ON PLAN.
5. THE CENTROID OF COLUMN & THEIR FOOTINGS SHALL BE COINCIDENT U.N.O.
6. TOP OF S.O.G. ELEVATION: AS SHOWN IN PLAN.
7. COORDINATE FLOOR OUTLETS PLUMBING SERVICE AND UNDER GRAOUND ELECTRICAL CONDUIT WITH PLUMBING AND ELECTRICAL CONTRACTOR.
8. BEARING CAPACITY OF SOIL IS 1500 psf.
9. TOP OF FOOTING TO BE BELOW THE FROST DEPTH OF 10" BELOW GROUND LEVEL OR AS PER SOIL REPORT.
10. PROVIDE STEM WALL OF 8" WIDTH & DEPTH MIN. 16" OR DEPTH AS PER SOIL REPORT.
11. PROVIDE PADESTAL DEPTH MIN. 16" OR DEPTH AS PER SOIL REPORT.
12. CONCRETE COMPRESSIVE STRENGHT AT FOOTING TO BE MINIMUM 4000 FOUNDATION NOTES:

NOTE A

4" CONC. SLAB w/6x6-W1.4/W1.4 W.W.F. OVER A MIN. 6" CRUSHED STONE OVER A MIN. 12" LOW P.I. SELECT FILL

FOOTING SCHEDULE

MARK	TYPE	WIDTH "B"	DEPTH "D"	REINFORCEMENT	DETAIL NO./ REMARKS
WF1	WALL FOOTING	3'-0"	2' - 0"	(3) #5 CONT. TOP & BOTTOM & #4 TRANSVERSE REBAR @ 16"O.C	-
WF2	ELEV WALL FOOTING	3'-0	2' - 0"	(3) #5 CONT. TOP & BOTTOM & #4 TRANSVERSE REBAR @ 16"O.C	-
WF3	WALL FOOTING	1'-4"	2' - 0"	(2) #5 CONT. TOP & BOTTOM & #4 TRANSVERSE REBAR @ 16"O.C	-
F1	CORRIDOR FOOTING	6'-0" x 12'-0"	2' - 0"	(11) #5 ALONG SHORTER SPAN & (21) # 5 ALONG LONGER SPAN	-
F6	STAIRS COLUMN FOOTING	4'-0" x 4'-0"	2' - 0"	(7) #5 EACH WAY BOTTOM	-
F13	EXTERIOR COLUMN FOOTING	6'-0" x 6'-0"	2' - 0"	(11) #5 EACH WAY BOTTOM	-

SYMBOL	LEGEND
HD(X)	HOLD DOWN
	SHEAR WALL
	EXTERNAL LOAD BEARING WALL
	INTERNAL LOAD BEARING WALL
	INFILL / NLP WALL
	LGS POST
	STEEL BEAM
	STEEL COLUMN
	HEADER
	WEBBED BEAM
	SHAFT OPENING

JS ARCHITECTS
9726 E. 42nd St. Suite 153, Tulsa, 74146
918.640.6800 - jhnsanford@sbl.com

COPYRIGHT 2026 John Sanford

6-08-2026

NOT VALID FOR CONSTRUCTION UNLESS SIGNED IN THIS BLOCK

DEVELOPED BY
HI-TECH HOSPITALITY

Residence INN BY MARRIOTT

RESIDENCE INN BY MARRIOTT

NW CORNER OF PINE & MEMORIAL, TULSA, OK

THESE DRAWINGS ARE INTENDED FOR REVIEW AND PERMITTING. DRAWINGS ARE NOT TO BE USED FOR CONSTRUCTION WITHOUT ARCHITECT'S AND ENGINEER'S SIGNATURE AND THEIR DATE OF ISSUE FOR CONSTRUCTION.

TULSA AIRPORT RIBM
61208
Project Number

No.	Description	Date

SHEET
S106
FOUNDATION PLAN

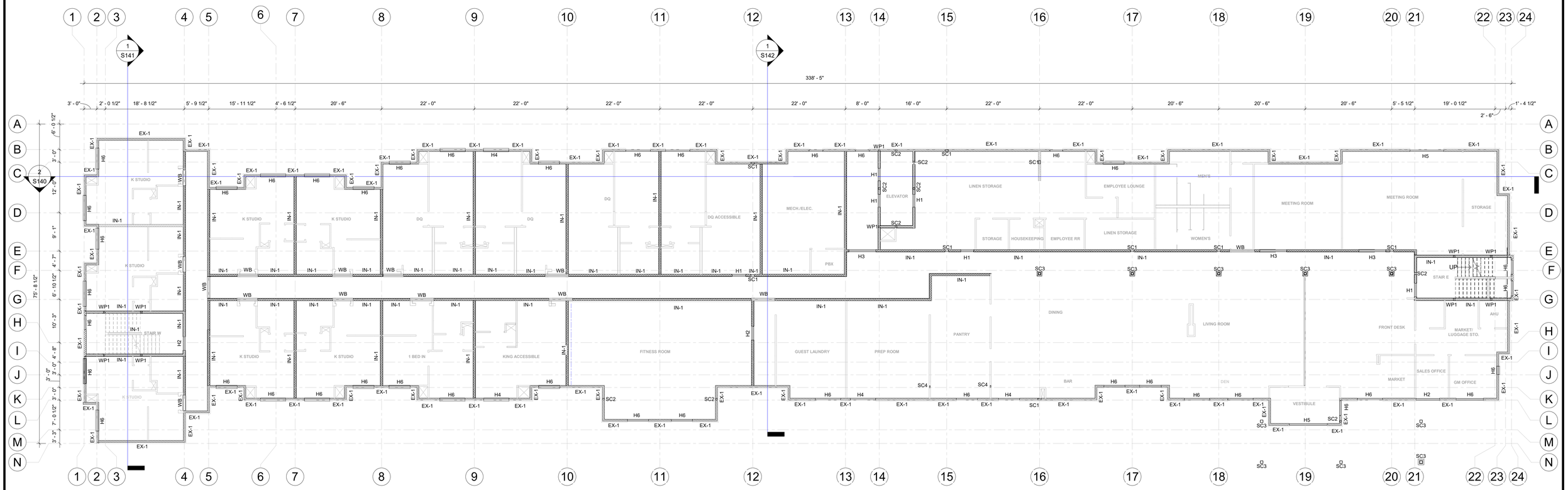

2 FIRST FLOOR WALL LAYOUT
3/32" = 1'-0"

WALL AND COLUMN NOTES

1. REFER TO ARCH & MEP DRAWINGS FOR OPENING DIMENSIONS ON THIS FLOOR.
2. SEE S-108 FOR SHEARWALL CALLOUT AND SCHEDULE.
3. ALL POST SUPPORTING HEADER , BEAM FRAMINGS AT UPPER LEVELS NEEDS TO EXTENDED ALL THE WAY DOWN .
4. SEE THE GENERAL NOTES ON SHEETS S-101,S-102, S-103, S-104 & S-105 FOR ADDITIONAL INFORMATION.
5. ALL POSTS ARE TO MATCH WIDTH AND MATERIAL OF WALL IN WHICH POST OCCURS.
6. IF STRONGER MATERIAL IS DESIGNATED HERE OR ON THE PLANS,THE STRONGER MATERIAL GOVERNS.
7. NON-LOAD BEARING TO BE 2X4 @24" O.C.U.N.O. & 2X6@24"O.C. UNC.

HEADER SCHEDULE

LEVEL	MARK	SIZE	JAMB POST
FIRST FLOOR	H1	(3) 2 X 6 SPF NO. 1/ NO. 2	3 JACK & 2 KING
	H2	(3) 2 X 6 1 3/4"2.0E MICROLLAM LVL	2 JACK & 2 KING
	H3	(3) 2 X 12 SPF NO. 1/ NO. 2	5 X 7 1.8 PARALLAM PSL
	H4	(3) 2 X 8 1 3/4"2.0E MICROLLAM LVL	2 JACK & 2 KING
	H5	(3) 2 X 10 1 3/4"2.0E MICROLLAM LVL	2 JACK & 2 KING
	H6	(3) 2 X 10 SPF NO. 1/ NO. 2	2 JACK & 2 KING
SECOND FLOOR	H1	(3) 2 X 6 SPF NO. 1/ NO. 2	3 JACK & 2 KING
	H2	(3) 2 X 10 SPF NO. 1/ NO. 2	2 JACK & 2 KING
	H3	(3) 2 X 12 SPF NO. 1/ NO. 2	5 X 6 1/4" 1.8 PARALLAM PSL
THIRD FLOOR	H1	(3) 2 X 6 SPF NO. 1/ NO. 2	2 JACK & 1 KING
	H2	(3) 2 X 10 SPF NO. 1/ NO. 2	2 JACK & 1 KING
	H3	(3) 2 X 12 SPF NO. 1/ NO. 2	4 JACK & 3 KING
FOURTH FLOOR	H1	(3) 2 X 6 SPF NO. 1/ NO. 2	2 JACK & 1 KING
	H2	(3) 2 X 10 SPF NO. 1/ NO. 2	1 JACK & 1 KING
	H3	(3) 2 X 10 SPF NO. 1/ NO. 2	3 JACK & 2 KING

SYMBOL	LEGEND
HD(X)	HOLD DOWN
	SHEAR WALL
	EXTERNAL LOAD BEARING WALL
	INTERNAL LOAD BEARING WALL
	INFILL / NLP WALL
	LGS POST
	STEEL BEAM
	STEEL COLUMN
	HEADER
	WEBBED BEAM
	SHAFT OPENING

STEEL COLUMN AND BEAM SCHEDULE

MARK	SIZE	COLUMN/ BEAM	GRADE
SC1	HSS 10x5x3/8	COLUMN	Fy = 36 Ksi
SC2	HSS 5-1/2X5-1/2X3/8	COLUMN	Fy = 36 Ksi
SC3	HSS8X8X5/8	COLUMN	Fy = 36 Ksi
SC4	HSS6X3X1/2	COLUMN	Fy = 36 Ksi
SB1	HSS20X8X5/8"	BEAM	Fy = 50 Ksi
SB2	W18X71	BEAM	Fy = 50 Ksi
SB3	W6X15	BEAM	Fy = 50 Ksi
SB4	W10X19	BEAM	Fy = 50 Ksi

FIRST FLOOR WOOD WALL SCHEDULE

MARK	SIZE	GRADE	SPACING	QUANTITY	COMMENTS	BLOCKING
EXW1	2X6	DF NO.2	16" O.C.	1	-	MID POINT BLOCKING
INW2	2X6	DF NO.1/NO.2	16" O.C.	1	-	MID POINT BLOCKING

JS ARCHITECTS
9726 E. 42nd St. Suite 153, Tulsa, 74146
918.640.6800 - jhnsanford@aol.com

COPYRIGHT 2026 John Sanford

6-08-2026

NOT VALID FOR CONSTRUCTION UNLESS SIGNED IN THIS BLOCK

DEVELOPED BY
HI-TECH HOSPITALITY
Residence INN BY MARRIOTT

RESIDENCE INN BY MARRIOTT

NW CORNER OF PINE & MEMORIAL, TULSA, OK

THESE DRAWINGS ARE INTENDED FOR REVIEW AND PERMITTING. DRAWINGS ARE NOT TO BE USED FOR CONSTRUCTION WITHOUT ARCHITECT'S AND ENGINEER'S SIGNATURE AND THEIR DATE OF ISSUE FOR CONSTRUCTION.

TULSA AIRPORT RIBM
61208
Project Number

No.	Description	Date

SHEET
S107
FIRST FLOOR WALL LAYOUT PLAN

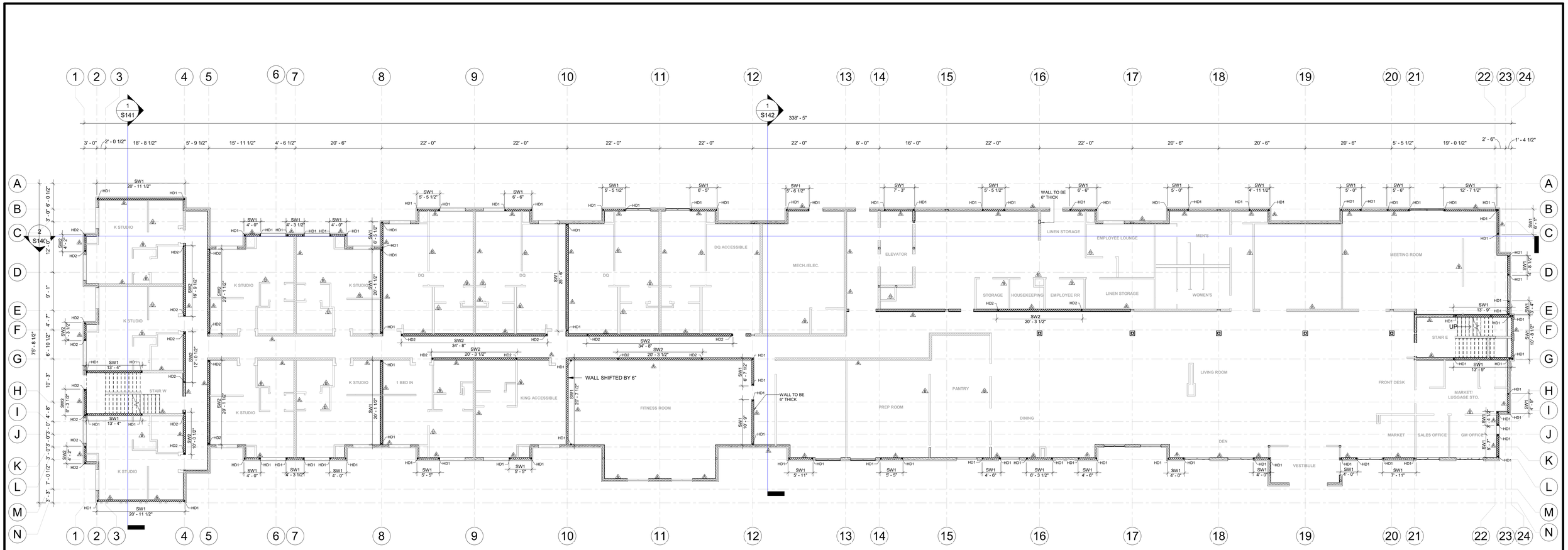

2 FIRST FLOOR SHEAR WALL LAYOUT
3/32" = 1'-0"

NOTE:

1. UNLESS NOTED OTHERWISE, FASTEN SHEATHING AS SW-2.
2. SHEAR WALL ENDS TO HAVE A HOLD-DOWN OR A UPLIFT CONNECTOR HTT4 U.N.O.
3. FLOOR-TO-FLOOR STRAPS AND FDTN HOLDOWNS SHOWN ON THIS SHEET ARE TO ATTACH TO THE BOTTOM OF THE SHEARWALLS ON THIS SHEET AND EXTEND DOWN TO THE FRAMING OR FOUNDATION BELOW.
4. REFER PRECEEDING WALL LAYOUT SHEET FOR WALL TYPE SPECIFICATION.
5. SEE THE GENERAL NOTES ON SHEETS S101, S102, S103, S104 AND S105 FOR ADDITIONAL INFORMATION
6. REFER TO ARCHITECTURAL PLANS FOR ALL DIMENSIONS. CONTRACTOR TO VERIFY ALL DIMENSIONS BEFORE STARTING CONSTRUCTION.

ANCHORAGE SCHEDULE

A. ALL ANCHOR TO BE 1/2 x 4" TITEN HD HEAVY DUTY SCREW @ 48" O.C.WITH PDPA ANCHOR IN BETWEEN TO CONNECT LOAD BEARING WALL BOTTOM PLATE TO CONCRETE.

B. ALL ANCHOR TO BE 0.157 x 1 1/2" PDPA FASTNERS @ 24" O.C. TO CONNECT NON-LOAD BEARING WALL BOTTOM PLATE TO CONCRETE.

SHEARWALL SHEATHING SCHEDULE (FIRST FLOOR)

MARK	TYPE	THICKNESS	SIDES	NAILING			NOTES
				SIZE	EDGE	FIELD	
SW1	OSB	1/2"	ONE	0.131" X 2 1/2"	4"	12"	-
SW2	OSB	1/2"	ONE	0.131" X 2 1/2"	6"	12"	-

NOTES FOR SHEAR WALLS

1. NAILS FOR SW WALLS MAY BE BOX NAILS. NAILS FOR FLOOR AND ROOF TO BE COMMON TYPE.
2. WHERE SHEATHING IS APPLIED TO EACH FACE OF WALL AND NAIL SPACING IS LESS THAN 6" O.C., PANEL JOINTS SHALL BE OFFSET TO FALL ON DIFFERENT FRAMING MEMBERS.

HOLD DOWN SCHEDULE

MARK	REQUIRED HOLDOWN & ATTACHMENT	MIN. POST	POST GRADE	ANCHOR BOLT				REMARK
				NAILING	SIZE	EMBEDMENT INTO FOOTING	EDGE DISTANCE	
HD1	HDU14	(4) 2X6	DF NO.1/2	(36) 1/4 X 2 1/2 SDS	1"	-	-	-
HD2	HDU11	(4) 2X6	DF NO.1/2	(30) 1/4 X 2 1/2 SDS	1"	-	-	-

SYMBOL	LEGEND
HD(X)	HOLD DOWN
	SHEAR WALL
	EXTERNAL LOAD BEARING WALL
	INTERNAL LOAD BEARING WALL
	INFILL / NLP WALL
	LGS POST
	STEEL BEAM
	STEEL COLUMN
	HEADER
	WEBBED BEAM
	SHAFT OPENING

JS ARCHITECTS
9726 E. 42nd St. Suite 153, Tulsa, 74146
918.640.6800 - jhnsanford@sbcglobal.net
COPYRIGHT 2026 John Sanford

6-08-2026

NOT VALID FOR CONSTRUCTION UNLESS SIGNED IN THIS BLOCK

DEVELOPED BY
HI-TECH HOSPITALITY
Residence INN BY MARRIOTT

RESIDENCE INN BY MARRIOTT

NW CORNER OF PINE & MEMORIAL, TULSA, OK

THESE DRAWINGS ARE INTENDED FOR REVIEW AND PERMITTING. DRAWINGS ARE NOT TO BE USED FOR CONSTRUCTION WITHOUT ARCHITECT'S AND ENGINEER'S SIGNATURE AND THEIR DATE OF ISSUE FOR CONSTRUCTION.

TULSA AIRPORT RIBM 61208
Project Number

No.	Description	Date

SHEET
S108
FIRST FLOOR SHEAR WALL LAYOUT PLAN

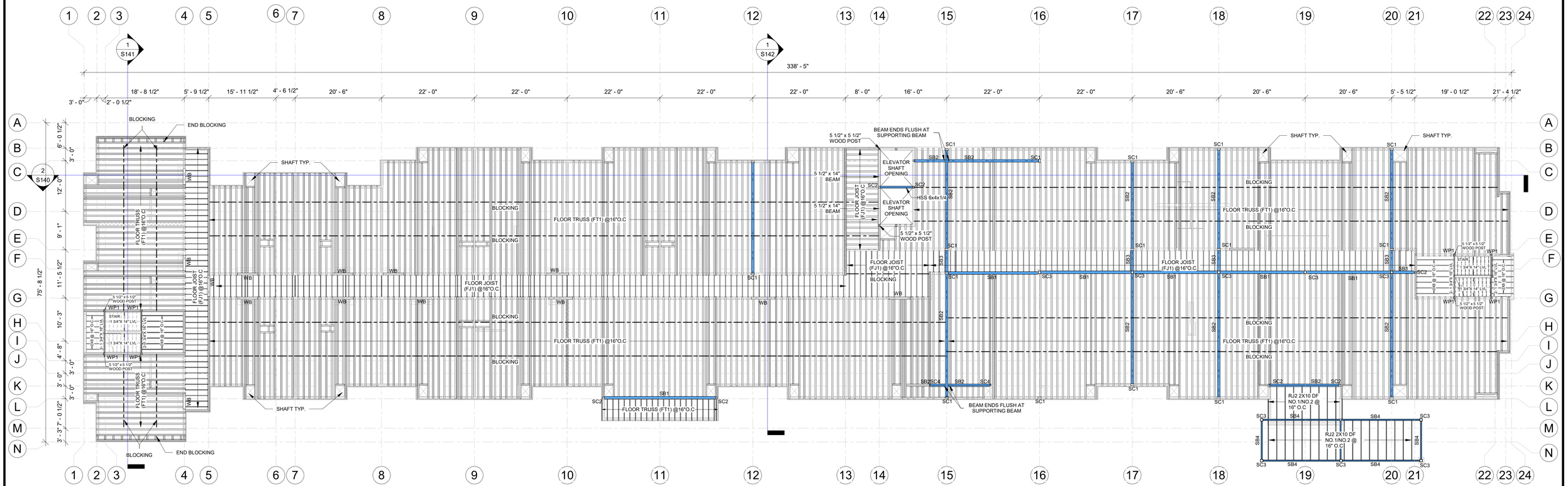

1 SECOND FLOOR FRAMING LAYOUT PLAN
3/32" = 1'-0"

FLOOR FRAMING NOTES

1. REFER TO ARCH & MEP DRAWINGS FOR OPENING DIMENSIONS ON THIS FLOOR.
2. JOIST OR RAFTER FRAMER TO ADJUST THE TRUSS & JOIST LOCATIONS AS NEEDED TO AVOID PLUMBING CONFLICTS BUT IN NO WAY TRUSS OR JOIST TO BE PLACED WITH A SPACING LARGER THAN SPECIFIED.
3. GC TO PROVIDE PRE-FABRICATED RAFTER UNDER NON-BEARING WALLS ALONG GRID LINES WHERE STEEL SUPPORTS OR BEARING WALLS DO NOT OCCUR.
4. ALL RAFTERS/JOIST ARE TWO POINT BEARING U.N.O
5. FLOOR SHEATHING AS PER ARCHITECTURAL.
6. ALL EXTERIOR WALL HEADERS SHALL BE SUPPORTED BY (1) 2X_ BEARING STUDS U.N.O.
7. SEE THE GENERAL NOTES ON SHEETS S-101, S-102, S-103, S-104 & S-105 FOR ADDITIONAL INFORMATION.
8. ALL POST SUPPORTING HEADER , BEAM FRAMINGS NEEDS TO EXTENDED ALL THE WAY DOWN TO FDTN OR SUPPORTING MEMBER.
9. PROVIDE FLOOR TRUSS OPENING FOR MEP DUCT PASSING.
10. REFER TO ARCHITECTURAL PLANS FOR ALL DIMENSIONS. CONTRACTOR TO VERIFY ALL DIMENSIONS BEFORE STARTING CONSTRUCTION.
11. ALL POST COMING FROM ABOVE FLOOR TO HAVE A DBL OR BEAM SUPPORTING.
12. DO NOT SCALE DRAWINGS. RESOLVE ANY DISCREPANCY WITH THE ARCHITECT. NOTIFY STRUCTURAL ENGINEER THROUGH THE ARCHITECT OF ANY VARIATIONS FROM DIMENSIONS AND CONDITIONS SHOWN BY THIS DRAWING.
13. IF STRONGER MATERIAL IS DESIGNATED HERE OR ON THE PLANS,THE STRONGER MATERIAL GOVERNS.

STEEL COLUMN AND BEAM SCHEDULE

MARK	SIZE	COLUMN/ BEAM	GRADE
SC1	HSS 10x5x3/8	COLUMN	Fy = 36 Ksi
SC2	HSS 5-1/2X5-1/2X3/8	COLUMN	Fy = 36 Ksi
SC3	HSS8X8X5/8	COLUMN	Fy = 36 Ksi
SC4	HSS6X3X1/2	COLUMN	Fy = 36 Ksi
SB1	HSS20X8X5/8"	BEAM	Fy = 50 Ksi
SB2	W18X71	BEAM	Fy = 50 Ksi
SB3	W6X15	BEAM	Fy = 50 Ksi
SB4	W10X19	BEAM	Fy = 50 Ksi

SECOND FLOOR WOOD BEAM SCHEDULE

MARK	TYPE	SPECIFICATION		END STUD POST
		TOP & BOTTOM	WEB	
WB	TRUSS	2X6 DF NO.1/NO.2	2X6 DF NO.1/NO.2	(4) 2X6 DF NO.1/NO.2 OR BETTER

WOOD JOIST SCHEDULE

MARK	TYPE	SIZE	O.C.S
FJ1	JOIST	2X6 DF NO.1/NO.2	16"
RJ2	JOIST	2X10 DF NO.1/NO.2	16"

WOOD POST SCHEDULE

MARK	SIZE	GRADE
WP1	5 1/2" x 5 1/2'	DF NO. 1/NO.2

FLOOR TRUSS SCHEDULE

MARK	SPECIFICATION	TOP & BOTTOM	WEB	REMARK	DETAIL REF.
FT1	21 1/2" DEEP WARREN TYPE WEBBED FLOOR TRUSS @16" O.C	2X6 DF NO.1/NO.2	2X6 DF NO.1/NO.2	ALL SUPPORT BEARING VERTICLE MEMBER TO BE OF SIZE MATCHING THE WALL WIDTH	

SYMBOL	LEGEND
HD(X)	HOLD DOWN
	SHEAR WALL
	EXTERNAL LOAD BEARING WALL
	INTERNAL LOAD BEARING WALL
	INFILL / NLP WALL
	LGS POST
	STEEL BEAM
	STEEL COLUMN
	HEADER
	WEBBED BEAM
	SHAFT OPENING

JS ARCHITECTS
9726 E. 42nd St. Suite 153, Tulsa, 74146
918.640.6800 - jhnsanford@aol.com

COPYRIGHT 2026 John Sanford

6-08-2026

NOT VALID FOR CONSTRUCTION UNLESS SIGNED IN THIS BLOCK

DEVELOPED BY
HI-TECH HOSPITALITY
Residence INN BY MARRIOTT

RESIDENCE INN BY MARRIOTT

NW CORNER OF PINE & MEMORIAL, TULSA, OK

THESE DRAWINGS ARE INTENDED FOR REVIEW AND PERMITTING. DRAWINGS ARE NOT TO BE USED FOR CONSTRUCTION WITHOUT ARCHITECT'S AND ENGINEER'S SIGNATURE AND THEIR DATE OF ISSUE FOR CONSTRUCTION.

TULSA AIRPORT RIBM
61208
Project Number

No.	Description	Date

SHEET
S109
SECOND FLOOR FRAMING LAYOUT PLAN

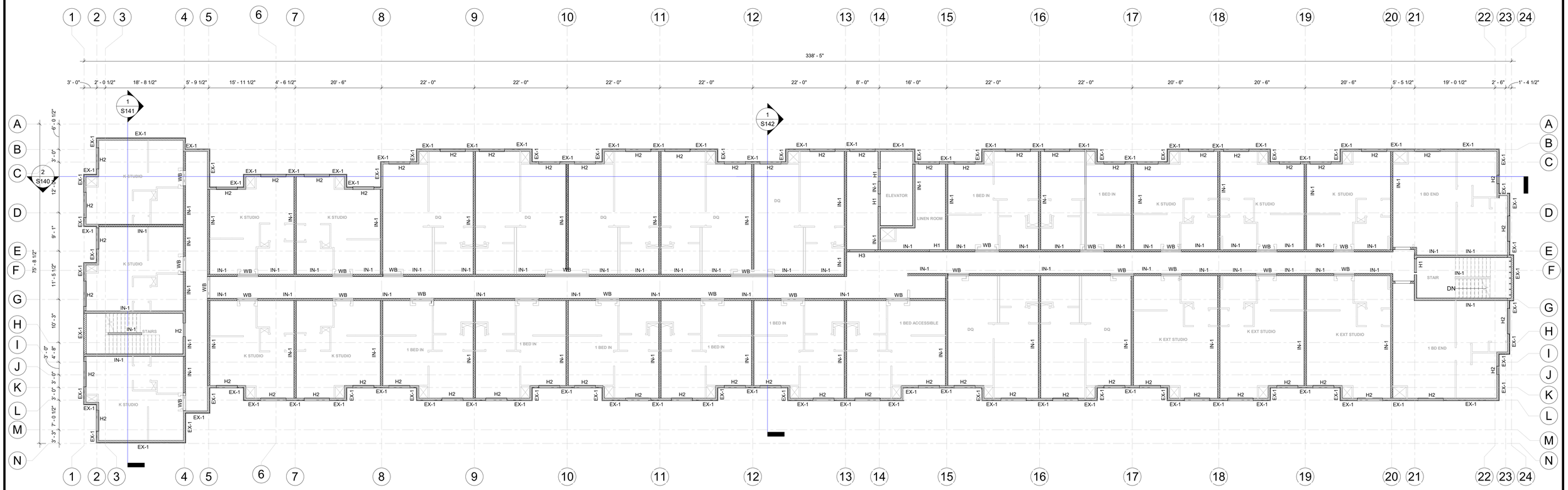

1 SECOND FLOOR WALL LAYOUT PLAN
3/32" = 1'-0"

WALL AND COLUMN NOTES

1. REFER TO ARCH & MEP DRAWINGS FOR OPENING DIMENSIONS ON THIS FLOOR.
2. SEE S-111 FOR SHEARWALL CALLOUT AND SCHEDULE.
3. ALL POST SUPPORTING HEADER , BEAM FRAMINGS AT UPPER LEVELS NEEDS TO EXTENDED ALL THE WAY DOWN .
4. SEE THE GENERAL NOTES ON SHEETS S-101,S-102, S-103, S-104 & S-105 FOR ADDITIONAL INFORMATION.
5. ALL POSTS ARE TO MATCH WIDTH AND MATERIAL OF WALL IN WHICH POST OCCURS.
6. IF STRONGER MATERIAL IS DESIGNATED HERE OR ON THE PLANS,THE STRONGER MATERIAL GOVERNS.
7. NON-LOAD BEARING TO BE 2X4 @24" O.C.U.N.O. & 2X6@24"O.C. UNC.

HEADER SCHEDULE

LEVEL	MARK	SIZE	JAMB POST
FIRST FLOOR	H1	(3) 2 X 6 SPF NO. 1/ NO. 2	3 JACK & 2 KING
	H2	(3) 2 X 6 1 3/4"2.0E MICROLLAM LVL	2 JACK & 2 KING
	H3	(3) 2 X 12 SPF NO. 1/ NO. 2	5 X 7 1.8 PARALLAM PSL
	H4	(3) 2 X 8 1 3/4"2.0E MICROLLAM LVL	2 JACK & 2 KING
	H5	(3) 2 X 10 1 3/4"2.0E MICROLLAM LVL	2 JACK & 2 KING
	H6	(3) 2 X 10 SPF NO. 1/ NO. 2	2 JACK & 2 KING
SECOND FLOOR	H1	(3) 2 X 6 SPF NO. 1/ NO. 2	3 JACK & 2 KING
	H2	(3) 2 X 10 SPF NO. 1/ NO. 2	2 JACK & 2 KING
	H3	(3) 2 X 12 SPF NO. 1/ NO. 2	5 X 6 1/4" 1.8 PARALLAM PSL
THIRD FLOOR	H1	(3) 2 X 6 SPF NO. 1/ NO. 2	2 JACK & 1 KING
	H2	(3) 2 X 10 SPF NO. 1/ NO. 2	2 JACK & 1 KING
	H3	(3) 2 X 12 SPF NO. 1/ NO. 2	4 JACK & 3 KING
FOURTH FLOOR	H1	(3) 2 X 6 SPF NO. 1/ NO. 2	2 JACK & 1 KING
	H2	(3) 2 X 10 SPF NO. 1/ NO. 2	1 JACK & 1 KING
	H3	(3) 2 X 10 SPF NO. 1/ NO. 2	3 JACK & 2 KING

SYMBOL	LEGEND
HD(X)	HOLD DOWN
	SHEAR WALL
	EXTERNAL LOAD BEARING WALL
	INTERNAL LOAD BEARING WALL
	INFILL / NLP WALL
	LGS POST
	STEEL BEAM
	STEEL COLUMN
	HEADER
	WEBBED BEAM
	SHAFT OPENING

STEEL COLUMN AND BEAM SCHEDULE

MARK	SIZE	COLUMN/ BEAM	GRADE
SC1	HSS 10x5x3/8	COLUMN	Fy = 36 Ksi
SC2	HSS 5-1/2X5-1/2X3/8	COLUMN	Fy = 36 Ksi
SC3	HSS8X8X5/8	COLUMN	Fy = 36 Ksi
SC4	HSS6X3X1/2	COLUMN	Fy = 36 Ksi
SB1	HSS20X8X5/8"	BEAM	Fy = 50 Ksi
SB2	W18X71	BEAM	Fy = 50 Ksi
SB3	W6X15	BEAM	Fy = 50 Ksi
SB4	W10X19	BEAM	Fy = 50 Ksi

SECOND FLOOR WOOD WALL SCHEDULE

MARK	SIZE	GRADE	SPACING	QUANTITY	COMMENTS	BLOCKING
EXW1	2X6	DF NO.2	16" O.C.	1	-	MID POINT BLOCKING
INW1	2X6	DF NO.2	16" O.C.	1	-	MID POINT BLOCKING

JS ARCHITECTS
9726 E. 42nd St. Suite 153, Tulsa, 74146
918 640 6800 - jhnsanford@sbl.com
COPYRIGHT 2026 John Sanford

6-08-2026

NOT VALID FOR CONSTRUCTION UNLESS SIGNED IN THIS BLOCK

DEVELOPED BY
HI-TECH HOSPITALITY
Residence INN BY MARRIOTT

RESIDENCE INN BY MARRIOTT

NW CORNER OF PINE & MEMORIAL, TULSA, OK

THESE DRAWINGS ARE INTENDED FOR REVIEW AND PERMITTING. DRAWINGS ARE NOT TO BE USED FOR CONSTRUCTION WITHOUT ARCHITECT'S AND ENGINEER'S SIGNATURE AND THEIR DATE OF ISSUE FOR CONSTRUCTION.

TULSA AIRPORT RIBM
61208
Project Number

No.	Description	Date

SHEET
S110
SECOND FLOOR WALL LAYOUT PLAN

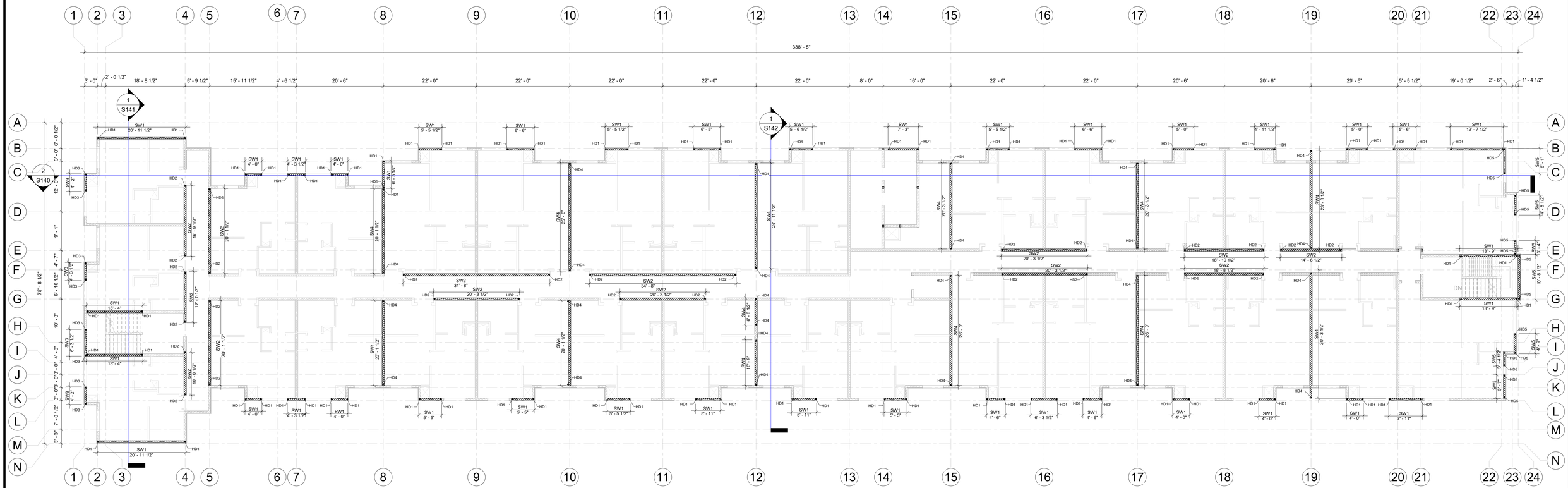

1 SECOND FLOOR SHEAR WALL LAYOUT PLAN
3/32" = 1'-0"

SHEARWALL SHEATHING SCHEDULE (SECOND FLOOR)

MARK	TYPE	THICKNESS	SIDES	NAILING			NOTES
				SIZE	EDGE	FIELD	
SW1	OSB	1/2"	ONE	0.131" X 2 1/2"	3"	12"	-
SW2	OSB	1/2"	ONE	0.131" X 2 1/2"	6"	12"	-
SW3	OSB	1/2"	ONE	0.131" X 2 1/2"	6"	12"	-
SW4	OSB	1/2"	ONE	0.131" X 2 1/2"	4"	12"	-
SW5	OSB	1/2"	ONE	0.131" X 2 1/2"	4"	12"	-

NOTES FOR SHEAR WALLS

1. NAILS FOR SW WALLS MAY BE BOX NAILS. NAILS FOR FLOOR AND ROOF TO BE COMMON TYPE.
2. WHERE SHEATHING IS APPLIED TO EACH FACE OF WALL AND NAIL SPACING IS LESS THAN 6" O.C., PANEL JOINTS SHALL BE OFFSET TO FALL ON DIFFERENT FRAMING MEMBERS.

HOLD DOWN SCHEDULE

MARK	REQUIRED HOLDOWN & ATTACHMENT	MIN. POST	POST GRADE	ANCHOR BOLT				REMARK
				NAILING	SIZE	EMBEDMENT INTO FOOTING	EDGE DISTANCE	
HD1	HDU14	(4) 2X6	DF NO.1/2	(20) 1/4 X 2 1/2 SDS	1"	-	-	-
HD2	HDU8	(4) 2X6	DF NO.1/2	(36) 1/4 X 2 1/2 SDS	7/8"	-	-	-
HD3	HDU11	(4) 2X6	DF NO.1/2	(30) 1/4 X 2 1/2 SDS	1"	-	-	-
HD4	HDU11	(4) 2X6	DF NO.1/2	(36) 1/4 X 2 1/2 SDS	1"	-	-	-
HD5	HDU8	(4) 2X6	DF NO.1/2	(36) 1/4 X 2 1/2 SDS	7/8"	-	-	-

NOTE:

1. UNLESS NOTED OTHERWISE, FASTEN SHEATHING AS SW-2.
2. SHEAR WALL ENDS TO HAVE A HOLD-DOWN OR A UPLIFT CONNECTOR HTT4 U.N.O.
3. FLOOR-TO-FLOOR STRAPS AND FDTN HOLDOWNS SHOWN ON THIS SHEET ARE TO ATTACH TO THE BOTTOM OF THE SHEARWALLS ON THIS SHEET AND EXTEND DOWN TO THE FRAMING OR FOUNDATION BELOW.
4. REFER PRECEEDING WALL LAYOUT SHEET FOR WALL TYPE SPECIFICATION.
5. SEE THE GENERAL NOTES ON SHEETS S101, S102, S103, S104 AND S105 FOR ADDITIONAL INFORMATION
6. REFER TO ARCHITECTURAL PLANS FOR ALL DIMENSIONS. CONTRACTOR TO VERIFY ALL DIMENSIONS BEFORE STARTING CONSTRUCTION.

SYMBOL	LEGEND
HD(X)	HOLD DOWN
	SHEAR WALL
	EXTERNAL LOAD BEARING WALL
	INTERNAL LOAD BEARING WALL
	INFILL / NLP WALL
	LGS POST
	STEEL BEAM
	STEEL COLUMN
	HEADER
	WEBBED BEAM
	SHAFT OPENING

JS ARCHITECTS
9726 E. 42nd St. Suite 153, Tulsa, 74146
918.640.6800 - jhnsanford@aol.com

COPYRIGHT 2026 John Sanford

6-08-2026

NOT VALID FOR CONSTRUCTION UNLESS SIGNED IN THIS BLOCK

DEVELOPED BY
HI-TECH HOSPITALITY
Residence INN BY MARRIOTT

RESIDENCE INN BY MARRIOTT

NW CORNER OF PINE & MEMORIAL, TULSA, OK

THESE DRAWINGS ARE INTENDED FOR REVIEW AND PERMITTING. DRAWINGS ARE NOT TO BE USED FOR CONSTRUCTION WITHOUT ARCHITECT'S AND ENGINEER'S SIGNATURE AND THEIR DATE OF ISSUE FOR CONSTRUCTION.

TULSA AIRPORT RIBM
61208
Project Number

No.	Description	Date

SHEET
S111
SECOND FLOOR SHEAR WALL LAYOUT PLAN

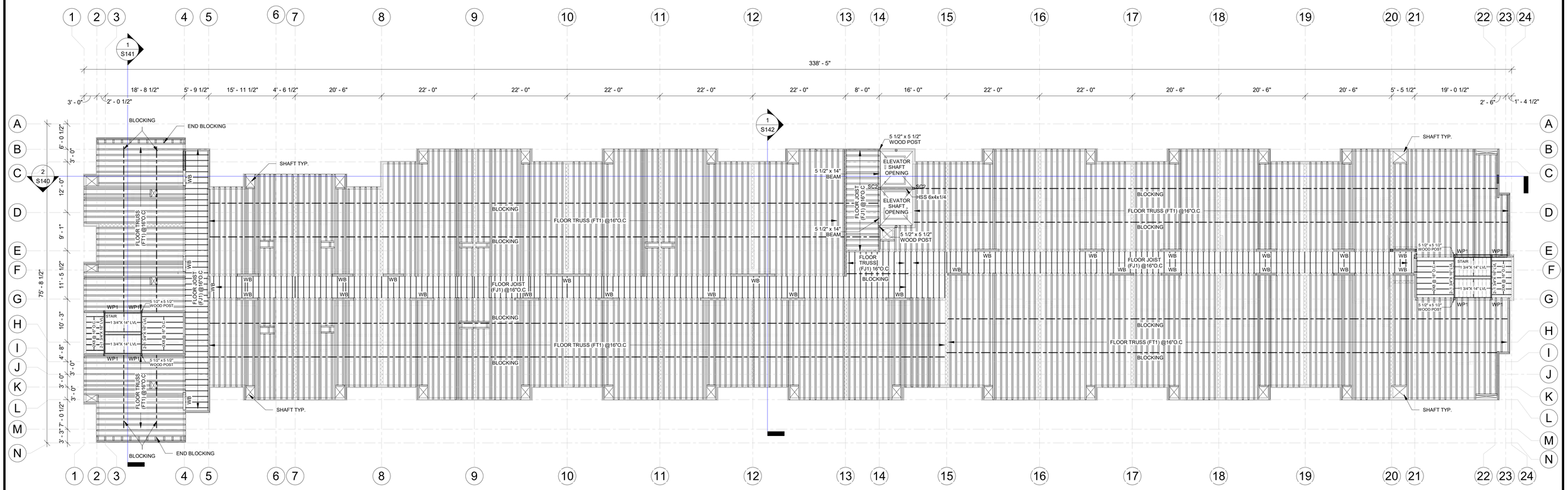

1 THIRD FLOOR FRAMING LAYOUT PLAN
3/32" = 1'-0"

FLOOR FRAMING NOTES

1. REFER TO ARCH & MEP DRAWINGS FOR OPENING DIMENSIONS ON THIS FLOOR.
2. JOIST OR RAFTER FRAMER TO ADJUST THE TRUSS & JOIST LOCATIONS AS NEEDED TO AVOID PLUMBING CONFLICTS BUT IN NO WAY TRUSS OR JOIST TO BE PLACED WITH A SPACING LARGER THAN SPECIFIED.
3. GC TO PROVIDE PRE-FABRICATED RAFTER UNDER NON-BEARING WALLS ALONG GRID LINES WHERE STEEL SUPPORTS OR BEARING WALLS DO NOT OCCUR.
4. ALL RAFTERS/JOIST ARE TWO POINT BEARING U.N.O
5. FLOOR SHEATHING AS PER ARCHITECTURAL.
6. ALL EXTERIOR WALL HEADERS SHALL BE SUPPORTED BY (1) 2X_ BEARING STUDS U.N.O.
7. SEE THE GENERAL NOTES ON SHEETS S-101, S-102, S-103, S-104 & S-105 FOR ADDITIONAL INFORMATION.
8. ALL POST SUPPORTING HEADER , BEAM FRAMINGS NEEDS TO EXTENDED ALL THE WAY DOWN TO FDTN OR SUPPORTING MEMBER.
9. PROVIDE FLOOR TRUSS OPENING FOR MEP DUCT PASSING.
10. REFER TO ARCHITECTURAL PLANS FOR ALL DIMENSIONS. CONTRACTOR TO VERIFY ALL DIMENSIONS BEFORE STARTING CONSTRUCTION.
11. ALL POST COMING FROM ABOVE FLOOR TO HAVE A DBL OR BEAM SUPPORTING.
12. DO NOT SCALE DRAWINGS. RESOLVE ANY DISCREPANCY WITH THE ARCHITECT. NOTIFY STRUCTURAL ENGINEER THROUGH THE ARCHITECT OF ANY VARIATIONS FROM DIMENSIONS AND CONDITIONS SHOWN BY THIS DRAWING.
13. IF STRONGER MATERIAL IS DESIGNATED HERE OR ON THE PLANS,THE STRONGER MATERIAL GOVERNS.

STEEL COLUMN AND BEAM SCHEDULE

MARK	SIZE	COLUMN/ BEAM	GRADE
SC1	HSS 10x5x3/8	COLUMN	Fy = 36 Ksi
SC2	HSS 5-1/2X5-1/2X3/8	COLUMN	Fy = 36 Ksi
SC3	HSS8X8X5/8	COLUMN	Fy = 36 Ksi
SC4	HSS6X3X1/2	COLUMN	Fy = 36 Ksi
SB1	HSS20X8X5/8"	BEAM	Fy = 50 Ksi
SB2	W18X71	BEAM	Fy = 50 Ksi
SB3	W6X15	BEAM	Fy = 50 Ksi
SB4	W10X19	BEAM	Fy = 50 Ksi

THIRD FLOOR WOOD BEAM SCHEDULE

MARK	TYPE	SPECIFICATION		END STUD POST
		TOP & BOTTOM	WEB	
WB	TRUSS	2X6 DF NO.1/NO.2	2X6 DF NO.1/NO.2	(4) 2X6 DF NO.1/NO.2 OR BETTER

WOOD JOIST SCHEDULE

MARK	TYPE	SIZE	O.C.S
FJ1	JOIST	2X6 DF NO.1/NO.2	16"
RJ2	JOIST	2X10 DF NO.1/NO.2	16"

WOOD POST SCHEDULE

MARK	SIZE	GRADE
WP1	5 1/2" x 5 1/2'	DF NO. 1/NO.2

FLOOR TRUSS SCHEDULE

MARK	SPECIFICATION	TOP & BOTTOM	WEB	REMARK	DETAIL REF.
FT1	21 1/2" DEEP WARREN TYPE WEBBED FLOOR TRUSS @16" O.C	2X6 DF NO.1/NO.2	2X6 DF NO.1/NO.2	ALL SUPPORT BEARING VERTICLE MEMBER TO BE OF SIZE MATCHING THE WALL WIDTH	

SYMBOL	LEGEND
HD(X)	HOLD DOWN
	SHEAR WALL
	EXTERNAL LOAD BEARING WALL
	INTERNAL LOAD BEARING WALL
	INFILL / NLP WALL
	LGS POST
	STEEL BEAM
	STEEL COLUMN
	HEADER
	WEBBED BEAM
	SHAFT OPENING

JS ARCHITECTS
9726 E. 42nd St. Suite 153, Tulsa, 74146
918.640.6800 - jhnsanford@aol.com

COPYRIGHT 2026 John Sanford

6-08-2026

NOT VALID FOR CONSTRUCTION UNLESS SIGNED IN THIS BLOCK

DEVELOPED BY
HI-TECH HOSPITALITY
Residence INN BY MARRIOTT

RESIDENCE INN BY MARRIOTT

NW CORNER OF PINE & MEMORIAL, TULSA, OK

THESE DRAWINGS ARE INTENDED FOR REVIEW AND PERMITTING. DRAWINGS ARE NOT TO BE USED FOR CONSTRUCTION WITHOUT ARCHITECT'S AND ENGINEER'S SIGNATURE AND THEIR DATE OF ISSUE FOR CONSTRUCTION.

TULSA AIRPORT RIBM
61208
Project Number

No.	Description	Date

SHEET
S112
THIRD FLOOR FRAMING LAYOUT PLAN

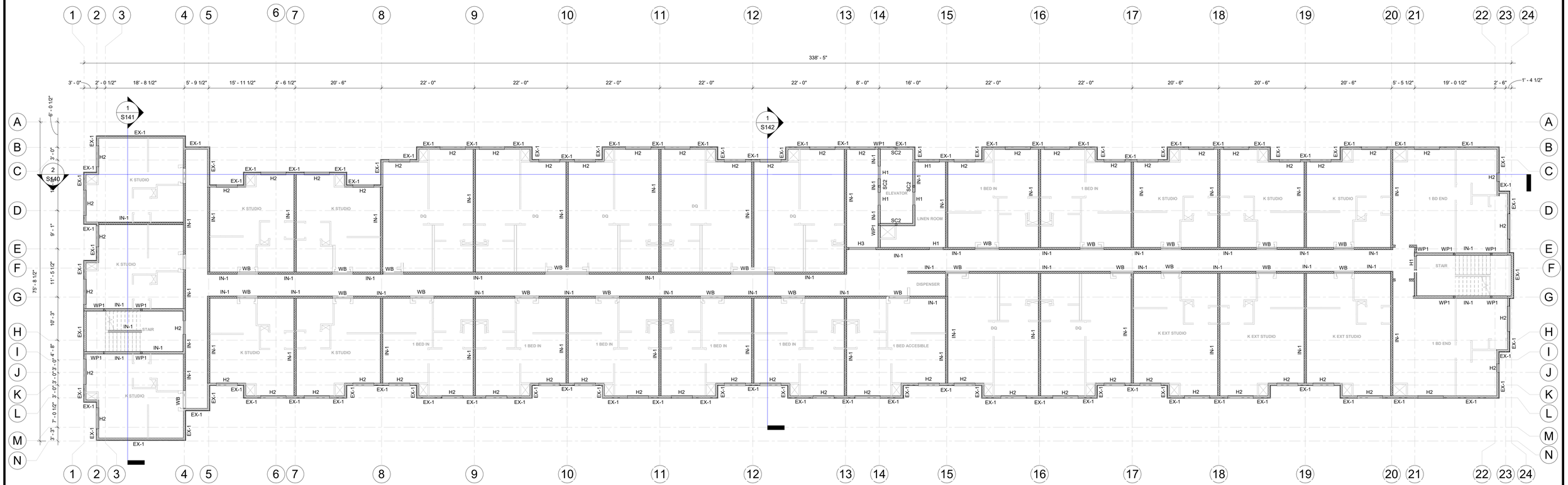

1 THIRD FLOOR WALL LAYOUT PLAN
3/32" = 1'-0"

WALL AND COLUMN NOTES

1. REFER TO ARCH & MEP DRAWINGS FOR OPENING DIMENSIONS ON THIS FLOOR.
2. SEE SHEAR WALL CALLOUT ON SHEET S-117 FOR SHEAR WALL INFORMATION.
3. ALL POST SUPPORTING HEADER ,BEAM FRAMING NEEDS TO EXTENDED ALL THE WAY DOWN TO FDTN OR SUPPORTING MEMBER.
4. SEE THE GENERAL NOTES ON SHEETS S-101,S-102, S-103, S-104 & S-105 FOR ADDITIONAL INFORMATION.
5. ALL POSTS ARE TO MATCH WIDTH AND MATERIAL OF WALL IN WHICH POST OCCURS U.N.O.
6. IF STRONGER MATERIAL IS DESIGNATED HERE OR ON THE PLANS,THE STRONGER MATERIAL GOVERNS.
7. NON-LOAD BEARING TO BE 2X4 @24" O.C U.N.O. & 2X6@ 24"O.C. U.N.O.

HEADER SCHEDULE

LEVEL	MARK	SIZE	JAMB POST
FIRST FLOOR	H1	(3) 2 X 6 SPF NO. 1/ NO. 2	3 JACK & 2 KING
	H2	(3) 2 X 6 1 3/4"2.0E MICROLLAM LVL	2 JACK & 2 KING
	H3	(3) 2 X 12 SPF NO. 1/ NO. 2	5 X 7 1.8 PARALLAM PSL
	H4	(3) 2 X 8 1 3/4"2.0E MICROLLAM LVL	2 JACK & 2 KING
	H5	(3) 2 X 10 1 3/4"2.0E MICROLLAM LVL	2 JACK & 2 KING
	H6	(3) 2 X 10 SPF NO. 1/ NO. 2	2 JACK & 2 KING
SECOND FLOOR	H1	(3) 2 X 6 SPF NO. 1/ NO. 2	3 JACK & 2 KING
	H2	(3) 2 X 10 SPF NO. 1/ NO. 2	2 JACK & 2 KING
	H3	(3) 2 X 12 SPF NO. 1/ NO. 2	5 X 6 1/4" 1.8 PARALLAM PSL
THIRD FLOOR	H1	(3) 2 X 6 SPF NO. 1/ NO. 2	2 JACK & 1 KING
	H2	(3) 2 X 10 SPF NO. 1/ NO. 2	2 JACK & 1 KING
	H3	(3) 2 X 12 SPF NO. 1/ NO. 2	4 JACK & 3 KING
FOURTH FLOOR	H1	(3) 2 X 6 SPF NO. 1/ NO. 2	2 JACK & 1 KING
	H2	(3) 2 X 10 SPF NO. 1/ NO. 2	1 JACK & 1 KING
	H3	(3) 2 X 10 SPF NO. 1/ NO. 2	3 JACK & 2 KING

SYMBOL	LEGEND
HD(X)	HOLD DOWN
	SHEAR WALL
	EXTERNAL LOAD BEARING WALL
	INTERNAL LOAD BEARING WALL
	INFILL / NLP WALL
	LGS POST
	STEEL BEAM
	STEEL COLUMN
	HEADER
	WEBBED BEAM
	SHAFT OPENING

STEEL COLUMN AND BEAM SCHEDULE

MARK	SIZE	COLUMN/ BEAM	GRADE
SC1	HSS 10x5x3/8	COLUMN	Fy = 36 Ksi
SC2	HSS 5-1/2X5-1/2X3/8	COLUMN	Fy = 36 Ksi
SC3	HSS8X8X5/8	COLUMN	Fy = 36 Ksi
SC4	HSS6X3X1/2	COLUMN	Fy = 36 Ksi
SB1	HSS20X8X5/8"	BEAM	Fy = 50 Ksi
SB2	W18X71	BEAM	Fy = 50 Ksi
SB3	W6X15	BEAM	Fy = 50 Ksi
SB4	W10X19	BEAM	Fy = 50 Ksi

THIRD FLOOR WOOD WALL SCHEDULE

MARK	SIZE	GRADE	SPACING	QUANTITY	COMMENTS	BLOCKING
EXW1	2X6	DF NO.2	16" O.C.	1	-	MID POINT BLOCKING
INW1	2X6	DF NO.2	16" O.C.	1	-	MID POINT BLOCKING

JS ARCHITECTS
9726 E. 42nd St. Suite 153, Tulsa, 74146
918.640.6800 - jhnsanford@aol.com
COPYRIGHT 2026 John Sanford

6-08-2026

NOT VALID FOR CONSTRUCTION UNLESS SIGNED IN THIS BLOCK

DEVELOPED BY
HI-TECH HOSPITALITY
Residence INN BY MARRIOTT

RESIDENCE INN BY MARRIOTT

NW CORNER OF PINE & MEMORIAL, TULSA, OK

THESE DRAWINGS ARE INTENDED FOR REVIEW AND PERMITTING. DRAWINGS ARE NOT TO BE USED FOR CONSTRUCTION WITHOUT ARCHITECT'S AND ENGINEER'S SIGNATURE AND THEIR DATE OF ISSUE FOR CONSTRUCTION.

TULSA AIRPORT RIBM
61208
Project Number

No.	Description	Date

SHEET
S113
THIRD FLOOR WALL LAYOUT PLAN

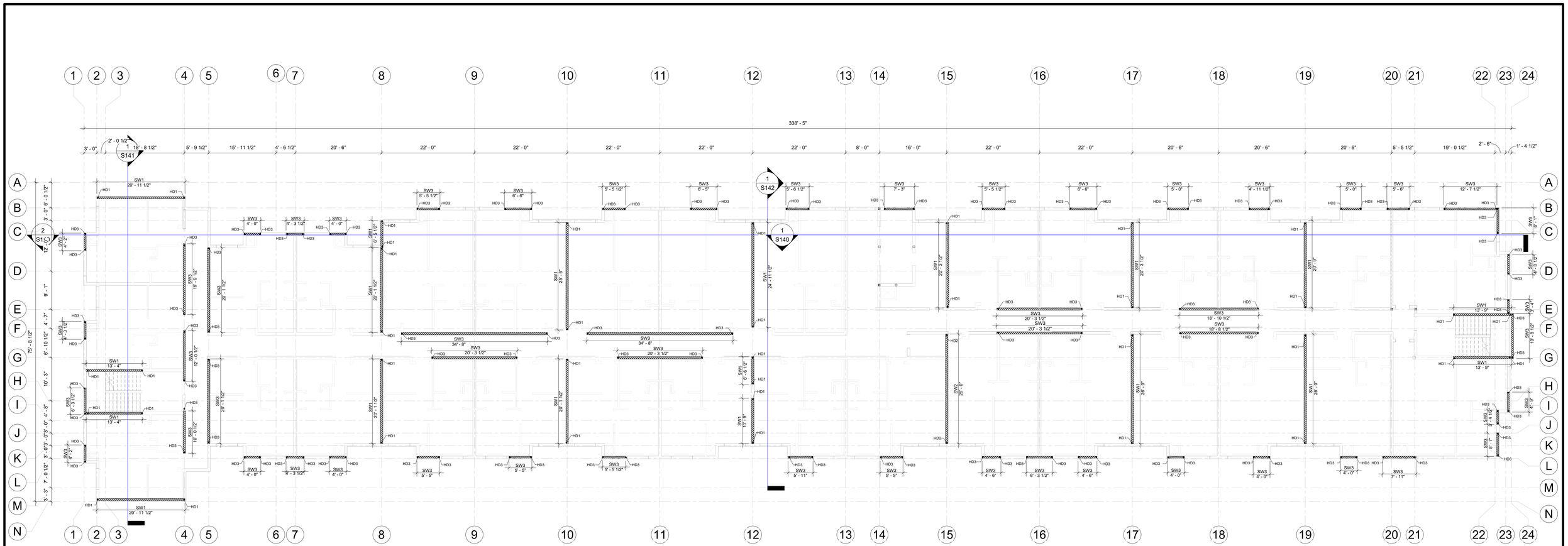

1 THIRD FLOOR SHEAR WALL LAYOUT PLAN
3/32" = 1'-0"

SHEARWALL SHEATHING SCHEDULE (THIRD FLOOR)

MARK	TYPE	THICKNESS	SIDES	NAILING			NOTES
				SIZE	EDGE	FIELD	
SW1	OSB	1/2"	ONE	0.131" X 2 1/2"	4"	12"	-
SW2	OSB	1/2"	ONE	0.131" X 2 1/2"	6"	12"	-
SW3	OSB	1/2"	ONE	0.131" X 2 1/2"	6"	12"	

NOTE:

1. UNLESS NOTED OTHERWISE, FASTEN SHEATHING AS SW-2.
2. SHEAR WALL ENDS TO HAVE A HOLD-DOWN OR A UPLIFT CONNECTOR HTT4 U.N.O.
3. FLOOR-TO-FLOOR STRAPS AND FDTN HOLDOWNS SHOWN ON THIS SHEET ARE TO ATTACH TO THE BOTTOM OF THE SHEARWALLS ON THIS SHEET AND EXTEND DOWN TO THE FRAMING OR FOUNDATION BELOW.
4. REFER PRECEEDING WALL LAYOUT SHEET FOR WALL TYPE SPECIFICATION.
5. SEE THE GENERAL NOTES ON SHEETS S101, S102, S103, S104 AND S105 FOR ADDITIONAL INFORMATION
6. REFER TO ARCHITECTURAL PLANS FOR ALL DIMENSIONS. CONTRACTOR TO VERIFY ALL DIMENSIONS BEFORE STARTING CONSTRUCTION.

NOTES FOR SHEAR WALLS

1. NAILS FOR SW WALLS MAY BE BOX NAILS. NAILS FOR FLOOR AND ROOF TO BE COMMON TYPE.
2. WHERE SHEATHING IS APPLIED TO EACH FACE OF WALL AND NAIL SPACING IS LESS THAN 6" O.C., PANEL JOINTS SHALL BE OFFSET TO FALL ON DIFFERENT FRAMING MEMBERS.

HOLD DOWN SCHEDULE

MARK	REQUIRED HOLDOWN & ATTACHMENT	MIN. POST	POST GRADE	ANCHOR BOLT				REMARK
				NAILING	SIZE	EMBEDMENT INTO FOOTING	EDGE DISTANCE	
HD1	HDU8	(2) 2X6	DF NO.1/2	(20) 1/4 X 2 1/2 SDS	7/8"	-	-	-
HD2	HTT4	(2) 2X6	DF NO.1/2	(18) # 10 X 1 1/2 SD	5/8"	-	-	-
HD3			DF NO.1/2	(20) 1/4 X 2 1/2 SDS	7/8"	-	-	-

SYMBOL	LEGEND
HD(X)	HOLD DOWN
	SHEAR WALL
	EXTERNAL LOAD BEARING WALL
	INTERNAL LOAD BEARING WALL
	INFILL / NLP WALL
	LGS POST
	STEEL BEAM
	STEEL COLUMN
	HEADER
	WEBBED BEAM
	SHAFT OPENING

JS ARCHITECTS
9726 E. 42nd St. Suite 153, Tulsa, 74146
918.640.6800 - jhnsanford@aol.com
COPYRIGHT 2026 John Sanford

6-08-2026

NOT VALID FOR CONSTRUCTION UNLESS SIGNED IN THIS BLOCK

DEVELOPED BY
HI-TECH HOSPITALITY
Residence INN BY MARRIOTT

RESIDENCE INN BY MARRIOTT

NW CORNER OF PINE & MEMORIAL, TULSA, OK

THESE DRAWINGS ARE INTENDED FOR REVIEW AND PERMITTING. DRAWINGS ARE NOT TO BE USED FOR CONSTRUCTION WITHOUT ARCHITECT'S AND ENGINEER'S SIGNATURE AND THEIR DATE OF ISSUE FOR CONSTRUCTION.

TULSA AIRPORT RIBM
61208
Project Number

No.	Description	Date

SHEET
S114
THIRD FLOOR SHEAR WALL LAYOUT PLAN

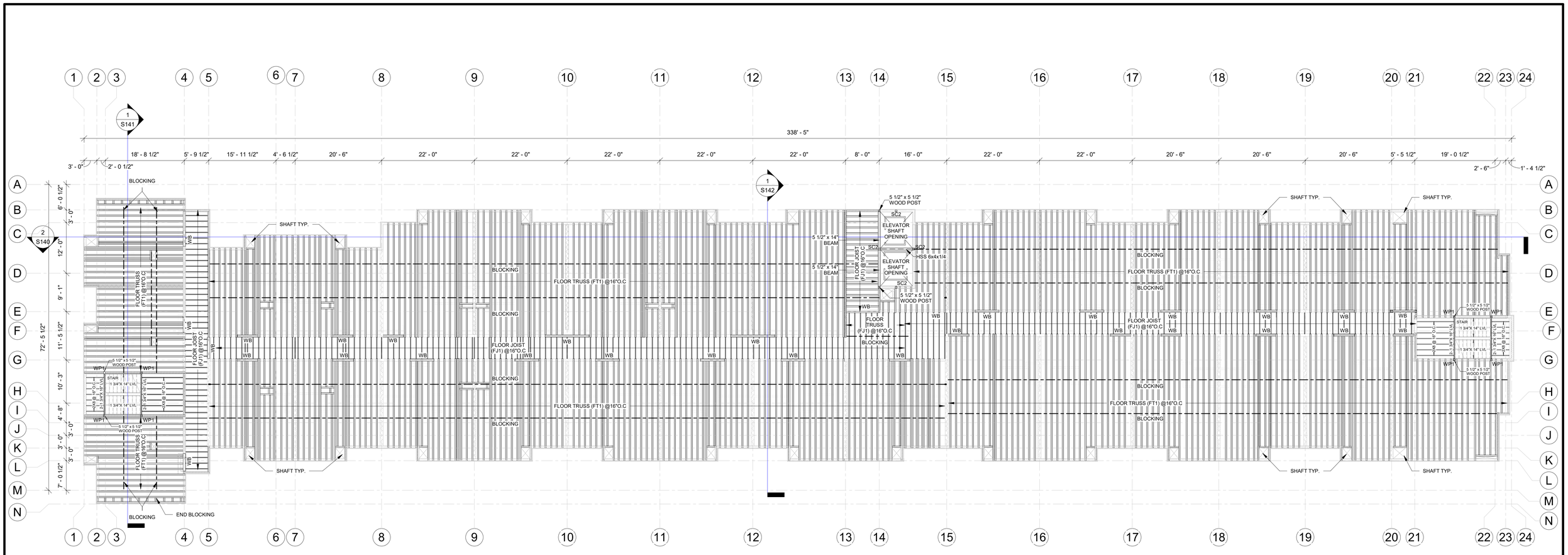

1 FOURTH FLOOR FRAMING LAYOUT PLAN
3/32" = 1'-0"

FLOOR FRAMING NOTES

1. REFER TO ARCH & MEP DRAWINGS FOR OPENING DIMENSIONS ON THIS FLOOR.
2. JOIST OR RAFTER FRAMER TO ADJUST THE TRUSS & JOIST LOCATIONS AS NEEDED TO AVOID PLUMBING CONFLICTS BUT IN NO WAY TRUSS OR JOIST TO BE PLACED WITH A SPACING LARGER THAN SPECIFIED.
3. GC TO PROVIDE PRE-FABRICATED RAFTER UNDER NON-BEARING WALLS ALONG GRID LINES WHERE STEEL SUPPORTS OR BEARING WALLS DO NOT OCCUR.
4. ALL RAFTERS/JOIST ARE TWO POINT BEARING U.N.O
5. FLOOR SHEATHING AS PER ARCHITECTURAL.
6. ALL EXTERIOR WALL HEADERS SHALL BE SUPPORTED BY (1) 2X_ BEARING STUDS U.N.O.
7. SEE THE GENERAL NOTES ON SHEETS S-101, S-102, S-103, S-104 & S-105 FOR ADDITIONAL INFORMATION.
8. ALL POST SUPPORTING HEADER , BEAM FRAMINGS NEEDS TO EXTENDED ALL THE WAY DOWN TO FDTN OR SUPPORTING MEMBER.
9. PROVIDE FLOOR TRUSS OPENING FOR MEP DUCT PASSING.
10. REFER TO ARCHITECTURAL PLANS FOR ALL DIMENSIONS. CONTRACTOR TO VERIFY ALL DIMENSIONS BEFORE STARTING CONSTRUCTION.
11. ALL POST COMING FROM ABOVE FLOOR TO HAVE A DBL OR BEAM SUPPORTING.
12. DO NOT SCALE DRAWINGS. RESOLVE ANY DISCREPANCY WITH THE ARCHITECT. NOTIFY STRUCTURAL ENGINEER THROUGH THE ARCHITECT OF ANY VARIATIONS FROM DIMENSIONS AND CONDITIONS SHOWN BY THIS DRAWING.
13. IF STRONGER MATERIAL IS DESIGNATED HERE OR ON THE PLANS,THE STRONGER MATERIAL GOVERNS.

STEEL COLUMN AND BEAM SCHEDULE

MARK	SIZE	COLUMN/ BEAM	GRADE
SC1	HSS 10x5x3/8	COLUMN	Fy = 36 Ksi
SC2	HSS 5-1/2X5-1/2X3/8	COLUMN	Fy = 36 Ksi
SC3	HSS8X8X5/8	COLUMN	Fy = 36 Ksi
SC4	HSS6X3X1/2	COLUMN	Fy = 36 Ksi
SB1	HSS20X8X5/8"	BEAM	Fy = 50 Ksi
SB2	W18X71	BEAM	Fy = 50 Ksi
SB3	W6X15	BEAM	Fy = 50 Ksi
SB4	W10X19	BEAM	Fy = 50 Ksi

FOURTH FLOOR WOOD BEAM SCHEDULE

MARK	TYPE	SPECIFICATION		END STUD POST
		TOP & BOTTOM	WEB	
WB	TRUSS	2X6 DF NO.1/NO.2	2X6 DF NO.1/NO.2	(3) 2X6 DF NO.1/NO.2 OR BETTER

WOOD JOIST SCHEDULE

MARK	TYPE	SIZE	O.C.S
FJ1	JOIST	2X6 DF NO.1/NO.2	16"
RJ2	JOIST	2X10 DF NO.1/NO.2	16"

WOOD POST SCHEDULE

MARK	SIZE	GRADE
WP1	5 1/2" x 5 1/2'	DF NO. 1/NO.2

FLOOR TRUSS SCHEDULE

MARK	SPECIFICATION	TOP & BOTTOM	WEB	REMARK	DETAIL REF.
FT1	21 1/2" DEEP WARREN TYPE WEBBED FLOOR TRUSS @16" O.C	2X6 DF NO.1/NO.2	2X6 DF NO.1/NO.2	ALL SUPPORT BEARING VERTICLE MEMBER TO BE OF SIZE MATCHING THE WALL WIDTH	

SYMBOL	LEGEND
HD(X)	HOLD DOWN
	SHEAR WALL
	EXTERNAL LOAD BEARING WALL
	INTERNAL LOAD BEARING WALL
	INFILL / NLP WALL
	LGS POST
	STEEL BEAM
	STEEL COLUMN
	HEADER
	WEBBED BEAM
	SHAFT OPENING

JS ARCHITECTS
9726 E. 42nd St. Suite 153, Tulsa, 74146
918.640.6800 - jhnsanford@aol.com

COPYRIGHT 2026 John Sanford

6-08-2026

NOT VALID FOR CONSTRUCTION UNLESS SIGNED IN THIS BLOCK

DEVELOPED BY
HI-TECH HOSPITALITY
Residence INN BY MARRIOTT

RESIDENCE INN BY MARRIOTT

NW CORNER OF PINE & MEMORIAL, TULSA, OK

THESE DRAWINGS ARE INTENDED FOR REVIEW AND PERMITTING. DRAWINGS ARE NOT TO BE USED FOR CONSTRUCTION WITHOUT ARCHITECT'S AND ENGINEER'S SIGNATURE AND THEIR DATE OF ISSUE FOR CONSTRUCTION.

TULSA AIRPORT RIBM
61208
Project Number

No.	Description	Date

SHEET
S115
FOURTH FLOOR FRAMING LAYOUT PLAN

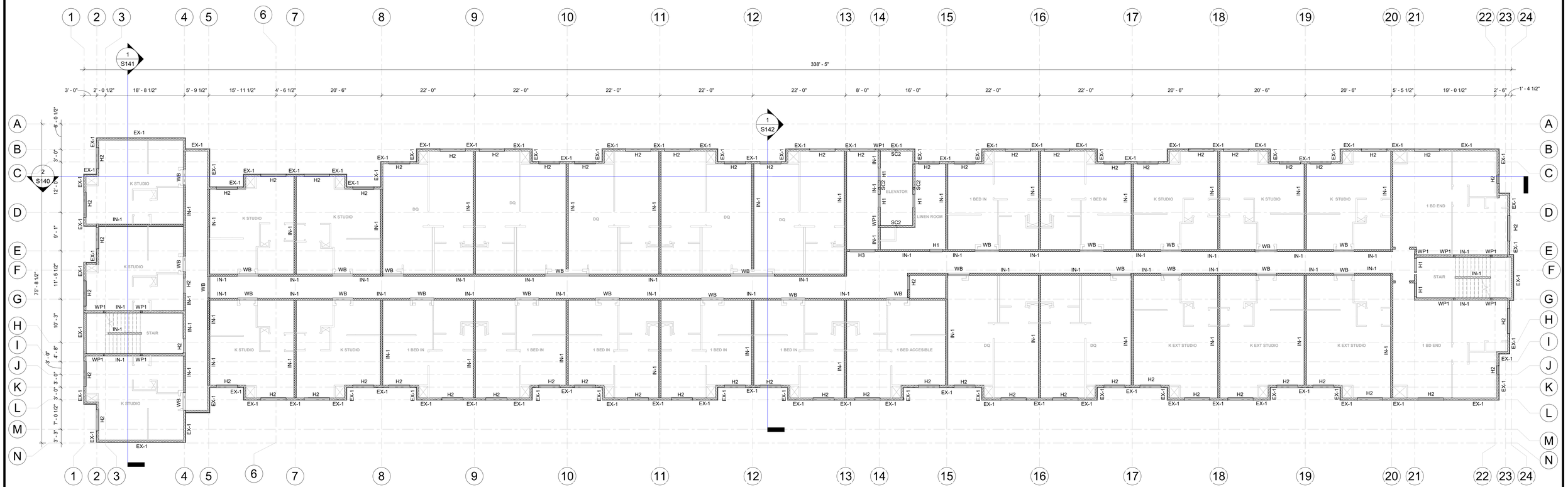

1 FOURTH FLOOR WALL LAYOUT PLAN
3/32" = 1'-0"

WALL AND COLUMN NOTES

1. REFER TO ARCH & MEP DRAWINGS FOR OPENING DIMENSIONS ON THIS FLOOR.
2. SEE SHEAR WALL CALLOUT ON SHEET S-117 FOR SHEAR WALL INFORMATION.
3. ALL POST SUPPORTING HEADER ,BEAM FRAMING NEEDS TO EXTENDED ALL THE WAY DOWN TO FDTN OR SUPPORTING MEMBER.
4. SEE THE GENERAL NOTES ON SHEETS S-101,S-102, S-103, S-104 & S-105 FOR ADDITIONAL INFORMATION.
5. ALL POSTS ARE TO MATCH WIDTH AND MATERIAL OF WALL IN WHICH POST OCCURS U.N.O.
6. IF STRONGER MATERIAL IS DESIGNATED HERE OR ON THE PLANS,THE STRONGER MATERIAL GOVERNS.
7. NON-LOAD BEARING TO BE 2X4 @24" O.C U.N.O. & 2X6@ 24"O.C. U.N.O.

HEADER SCHEDULE

LEVEL	MARK	SIZE	JAMB POST
FIRST FLOOR	H1	(3) 2 X 6 SPF NO. 1/ NO. 2	3 JACK & 2 KING
	H2	(3) 2 X 6 1 3/4"2.0E MICROLLAM LVL	2 JACK & 2 KING
	H3	(3) 2 X 12 SPF NO. 1/ NO. 2	5 X 7 1.8 PARALLAM PSL
	H4	(3) 2 X 8 1 3/4"2.0E MICROLLAM LVL	2 JACK & 2 KING
	H5	(3) 2 X 10 1 3/4"2.0E MICROLLAM LVL	2 JACK & 2 KING
	H6	(3) 2 X 10 SPF NO. 1/ NO. 2	2 JACK & 2 KING
SECOND FLOOR	H1	(3) 2 X 6 SPF NO. 1/ NO. 2	3 JACK & 2 KING
	H2	(3) 2 X 10 SPF NO. 1/ NO. 2	2 JACK & 2 KING
	H3	(3) 2 X 12 SPF NO. 1/ NO. 2	5 X 6 1/4" 1.8 PARALLAM PSL
THIRD FLOOR	H1	(3) 2 X 6 SPF NO. 1/ NO. 2	2 JACK & 1 KING
	H2	(3) 2 X 10 SPF NO. 1/ NO. 2	2 JACK & 1 KING
	H3	(3) 2 X 12 SPF NO. 1/ NO. 2	4 JACK & 3 KING
FOURTH FLOOR	H1	(3) 2 X 6 SPF NO. 1/ NO. 2	2 JACK & 1 KING
	H2	(3) 2 X 10 SPF NO. 1/ NO. 2	1 JACK & 1 KING
	H3	(3) 2 X 10 SPF NO. 1/ NO. 2	3 JACK & 2 KING

SYMBOL	LEGEND
HD(X)	HOLD DOWN
	SHEAR WALL
	EXTERNAL LOAD BEARING WALL
	INTERNAL LOAD BEARING WALL
	INFILL / NLP WALL
	LGS POST
	STEEL BEAM
	STEEL COLUMN
	HEADER
	WEBBED BEAM
	SHAFT OPENING

STEEL COLUMN AND BEAM SCHEDULE

MARK	SIZE	COLUMN/ BEAM	GRADE
SC1	HSS 10x5x3/8	COLUMN	Fy = 36 Ksi
SC2	HSS 5-1/2X5-1/2X3/8	COLUMN	Fy = 36 Ksi
SC3	HSS8X8X5/8	COLUMN	Fy = 36 Ksi
SC4	HSS6X3X1/2	COLUMN	Fy = 36 Ksi
SB1	HSS20X8X5/8"	BEAM	Fy = 50 Ksi
SB2	W18X71	BEAM	Fy = 50 Ksi
SB3	W6X15	BEAM	Fy = 50 Ksi
SB4	W10X19	BEAM	Fy = 50 Ksi

FOURTH FLOOR WOOD WALL SCHEDULE

MARK	SIZE	GRADE	SPACING	QUANTITY	COMMENTS	BLOCKING
EXW1	2X6	DF NO.2	16" O.C.	1	-	MID POINT BLOCKING
INW1	2X6	DF NO.2	16" O.C.	1	-	MID POINT BLOCKING

JS ARCHITECTS
9726 E. 42nd St. Suite 153, Tulsa, 74146
918.640.6800 - jhnsanford@aol.com
COPYRIGHT 2026 John Sanford

6-08-2026

NOT VALID FOR CONSTRUCTION UNLESS SIGNED IN THIS BLOCK

DEVELOPED BY
HI-TECH HOSPITALITY
Residence INN BY MARRIOTT

RESIDENCE INN BY MARRIOTT

NW CORNER OF PINE & MEMORIAL, TULSA, OK

THESE DRAWINGS ARE INTENDED FOR REVIEW AND PERMITTING. DRAWINGS ARE NOT TO BE USED FOR CONSTRUCTION WITHOUT ARCHITECT'S AND ENGINEER'S SIGNATURE AND THEIR DATE OF ISSUE FOR CONSTRUCTION.

TULSA AIRPORT RIBM
61208
Project Number

No.	Description	Date

SHEET
S116
FOURTH FLOOR WALL LAYOUT PLAN

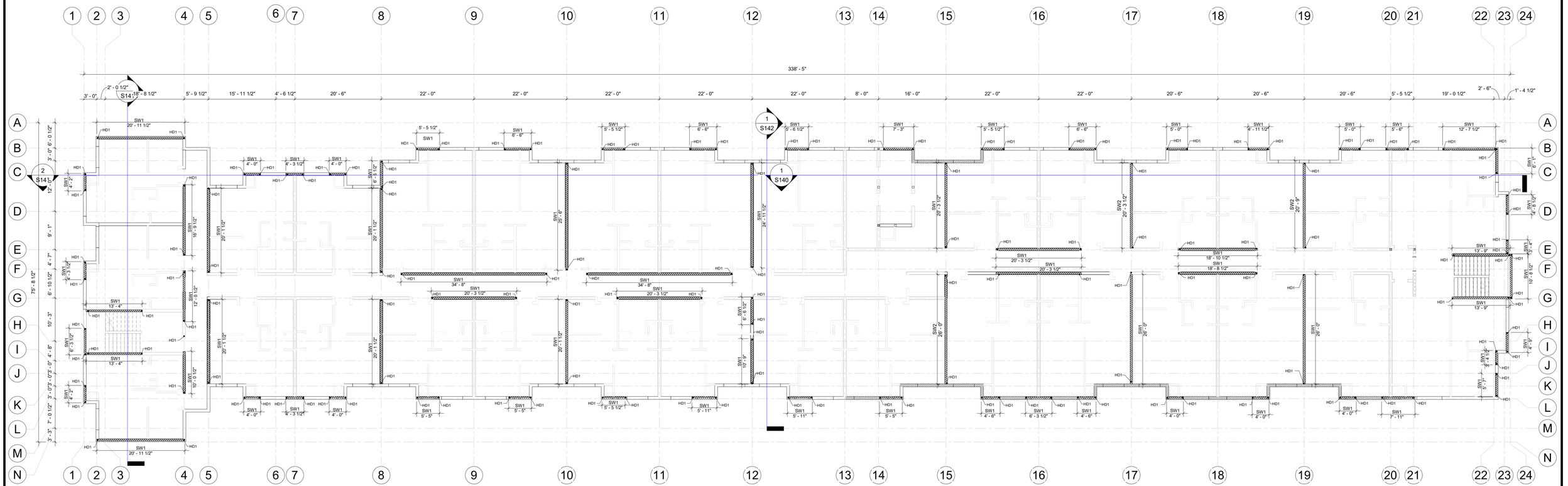

1 FOURTH FLOOR SHEAR WALL LAYOUT PLAN
3/32" = 1'-0"

SHEARWALL SHEATHING SCHEDULE (FOURTH FLOOR)

MARK	TYPE	THICKNESS	SIDES	NAILING			NOTES
				SIZE	EDGE	FIELD	
SW1	OSB	1/2"	ONE	0.131" X 2 1/2"	6"	12"	-
SW2	OSB	1/2"	ONE	0.131" X 2 1/2"	6"	12"	-

NOTE:

1. UNLESS NOTED OTHERWISE, FASTEN SHEATHING AS SW-1.
2. SHEAR WALL ENDS TO HAVE A HOLD-DOWN OR A UPLIFT CONNECTOR HTT4 U.N.O.
3. FLOOR-TO-FLOOR STRAPS AND FDTN HOLDOWNS SHOWN ON THIS SHEET ARE TO ATTACH TO THE BOTTOM OF THE SHEARWALLS ON THIS SHEET AND EXTEND DOWN TO THE FRAMING OR FOUNDATION BELOW.
4. REFER PRECEEDING WALL LAYOUT SHEET FOR WALL TYPE SPECIFICATION.
5. SEE THE GENERAL NOTES ON SHEETS S101, S102, S103S, S104 AND S105 FOR ADDITIONAL INFORMATION
6. REFER TO ARCHITECTURAL PLANS FOR ALL DIMENSIONS. CONTRACTOR TO VERIFY ALL DIMENSIONS BEFORE STARTING CONSTRUCTION.

NOTES FOR SHEAR WALLS

1. NAILS FOR SW WALLS MAY BE BOX NAILS. NAILS FOR FLOOR AND ROOF TO BE COMMON TYPE.
2. WHERE SHEATHING IS APPLIED TO EACH FACE OF WALL AND NAIL SPACING IS LESS THAN 6" O.C., PANEL JOINTS SHALL BE OFFSET TO FALL ON DIFFERENT FRAMING MEMBERS.

HOLD DOWN SCHEDULE

MARK	REQUIRED HOLDOWN & ATTACHMENT	MIN. POST	POST GRADE	ANCHOR BOLT				REMARK
				NAILING	SIZE	EMBEDMENT INTO FOOTING	EDGE DISTANCE	
HD1	HTT4	(2) 2X6	DF NO.1/2	(18) # 10 X 1 1/2" SD	5/8"	-	-	-
HD1	HTT4	(2) 2X6	DF NO.1/2	(18) # 10 X 1 1/2" SD	5/8"	-	-	-

SYMBOL	LEGEND
HD(X)	HOLD DOWN
	SHEAR WALL
	EXTERNAL LOAD BEARING WALL
	INTERNAL LOAD BEARING WALL
	INFILL / NLP WALL
	LGS POST
	STEEL BEAM
	STEEL COLUMN
	HEADER
	WEBBED BEAM
	SHAFT OPENING

JS ARCHITECTS
9726 E. 42nd St. Suite 153, Tulsa, 74146
918.640.6800 - jhnsanford@aol.com
COPYRIGHT 2026 John Sanford

6-08-2026
NOT VALID FOR CONSTRUCTION UNLESS SIGNED IN THIS BLOCK

DEVELOPED BY
HI-TECH HOSPITALITY
Residence INN BY MARRIOTT

RESIDENCE INN BY MARRIOTT

NW CORNER OF PINE & MEMORIAL, TULSA, OK

THESE DRAWINGS ARE INTENDED FOR REVIEW AND PERMITTING. DRAWINGS ARE NOT TO BE USED FOR CONSTRUCTION WITHOUT ARCHITECT'S AND ENGINEER'S SIGNATURE AND THEIR DATE OF ISSUE FOR CONSTRUCTION.

TULSA AIRPORT RIBM
61208
Project Number

No.	Description	Date

SHEET
S117
FOURTH FLOOR SHEAR WALL LAYOUT PLAN

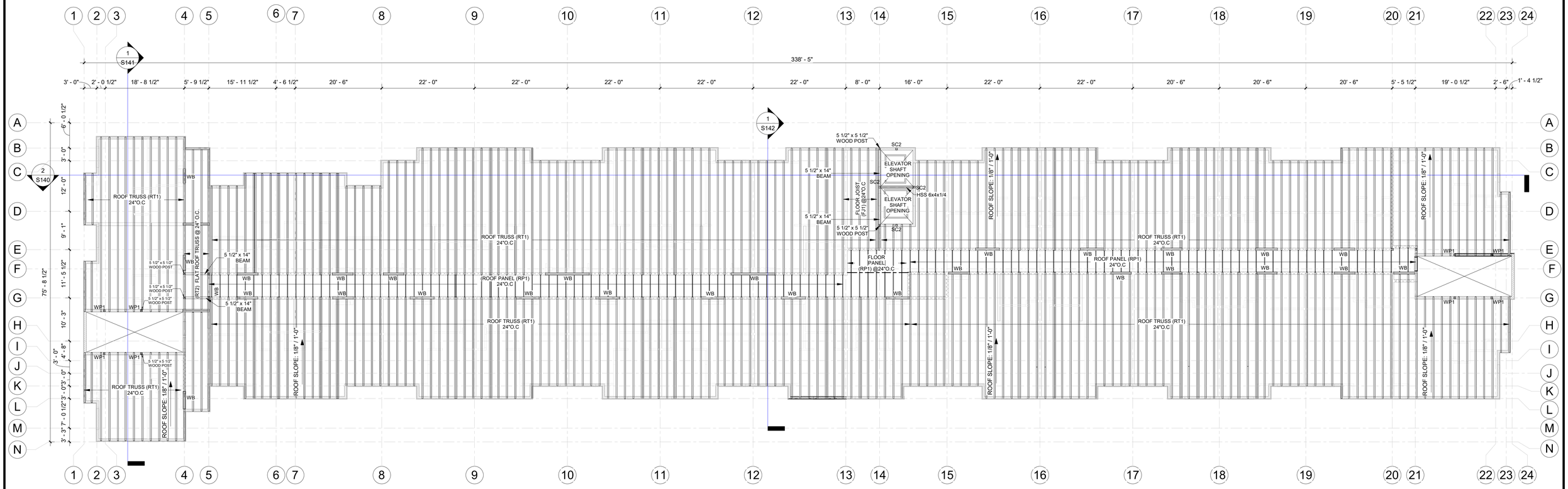

1 ROOF FRAMING PLAN
3/32" = 1'-0"

ROOF FRAMING NOTES

1. REFER TO ARCH & MEP DRAWINGS FOR OPENING DIMENSIONS ON THIS FLOOR.
2. JOIST OR TRUSS, FRAMER TO ADJUST THE TRUSS & JOIST LOCATIONS AS NEEDED TO AVOID PLUMBING CONFLICTS BUT IN NO WAY TRUSS OR JOIST TO BE PLACED WITH A SPACING LARGER THAN SPECIFIED.
3. GC TO PROVIDE PRE-FABRICATED TRUSS UNDER NON-BEARING WALLS ALONG GRID LINES WHERE STEEL SUPPORTS OR BEARING WALLS DO NOT OCCUR.
4. ALL TRUSSES/JOIST ARE TWO POINT BEARING U.N.O
5. ROOF SHEATHING AS PER ARCHITECTURAL.
6. ALL EXTERIOR WALL HEADERS SHALL BE SUPPORTED BY (1) 2X_ BEARING STUDS U.N.O.
7. SEE THE GENERAL NOTES ON SHEETS S101, S102, S103S, S104 AND S105 FOR ADDITIONAL INFORMATION.
8. ALL POST SUPPORTING HEADER , BEAM FRAMINGS NEEDS TO EXTENDED ALL THE WAY DOWN TO FDTN OR SUPPORTING MEMBER.
9. REFER TO ARCH PLANS FOR ROOF SLOPES
11.REFER TO ARCHITECTURAL PLANS FOR ALL DIMENSIONS. CONTRACTOR TO VERIFY ALL DIMENSIONS BEFORE STARTING CONSTRUCTION.
12.DO NOT SCALE DRAWINGS. RESOLVE ANY DISCREPANCY WITH THE ARCHITECT. NOTIFY STRUCTURAL ENGINEER THROUGH THE ARCHITECT OF ANY VARIATIONS FROM DIMENSIONS AND CONDITIONS SHOWN BY THIS DRAWING

STEEL COLUMN AND BEAM SCHEDULE

MARK	SIZE	COLUMN/ BEAM	GRADE
SC1	HSS 10x5x3/8	COLUMN	Fy = 36 Ksi
SC2	HSS 5-1/2X5-1/2X3/8	COLUMN	Fy = 36 Ksi
SC3	HSS8X8X5/8	COLUMN	Fy = 36 Ksi
SC4	HSS6X3X1/2	COLUMN	Fy = 36 Ksi
SB1	HSS20X8X5/8"	BEAM	Fy = 50 Ksi
SB2	W18X71	BEAM	Fy = 50 Ksi
SB3	W6X15	BEAM	Fy = 50 Ksi
SB4	W10X19	BEAM	Fy = 50 Ksi

WOOD BEAM SCHEDULE

MARK	TYPE	SPECIFICATION		END STUD POST
		TOP & BOTTOM	WEB	
WB	WEBBED	2X6 DF NO.1/NO.2	2X6 DF NO.1/NO.2	(3) 2X6 SPF NO.1/NO.2 OR BETTER

ROOF TRUSS SCHEDULE

MARK	TYPE	SPACING	SPECIFICATION		
			TOP & BOTTOM	WEB	REMARK
RT1	MONO SLOPE TRUSSES	16" O.C	2X6 DF NO.1/NO.2	2X6 DF NO.1/NO.2	ALL SUPPORT BEARING VERTICLE MEMBER TO BE OF SIZE MATCHING THE WALL WIDTH
RT2	MONO SLOPE TRUSSES	16" O.C	2X6 DF NO.1/NO.2	2X6 DF NO.1/NO.2	ALL SUPPORT BEARING VERTICLE MEMBER TO BE OF SIZE MATCHING THE WALL WIDTH

WOOD POST SCHEDULE

MARK	SIZE	GRADE
WP1	5 1/2" x 5 1/2'	DF NO. 1/NO.2

WOOD JOIST SCHEDULE

MARK	TYPE	SIZE	O.C.S
FJ1	JOIST	2X6 DF NO.1/NO.2	16"
RJ2	JOIST	2X10 DF NO.1/NO.2	16"

WOOD PANEL SCHEDULE

MARK	TYPE	SIZE	O.C.S
RP1	JOIST	DF NO.1/NO.2	16"

SYMBOL	LEGEND
HD(X)	HOLD DOWN
	SHEAR WALL
	EXTERNAL LOAD BEARING WALL
	INTERNAL LOAD BEARING WALL
	INFILL / NLP WALL
	LGS POST
	STEEL BEAM
	STEEL COLUMN
	HEADER
	WEBBED BEAM
	SHAFT OPENING

JS ARCHITECTS
9726 E. 42nd St. Suite 153, Tulsa, 74146
918.640.6800 - jhnsanford@aol.com

COPYRIGHT 2026 John Sanford

6-08-2026

NOT VALID FOR CONSTRUCTION UNLESS SIGNED IN THIS BLOCK

DEVELOPED BY
HI-TECH HOSPITALITY
Residence INN BY MARRIOTT

RESIDENCE INN BY MARRIOTT

NW CORNER OF PINE & MEMORIAL, TULSA, OK

THESE DRAWINGS ARE INTENDED FOR REVIEW AND PERMITTING. DRAWINGS ARE NOT TO BE USED FOR CONSTRUCTION WITHOUT ARCHITECT'S AND ENGINEER'S SIGNATURE AND THEIR DATE OF ISSUE FOR CONSTRUCTION.

TULSA AIRPORT RIBM
61208
Project Number

No.	Description	Date

SHEET
S118
ROOF FRAMING LAYOUT PLAN

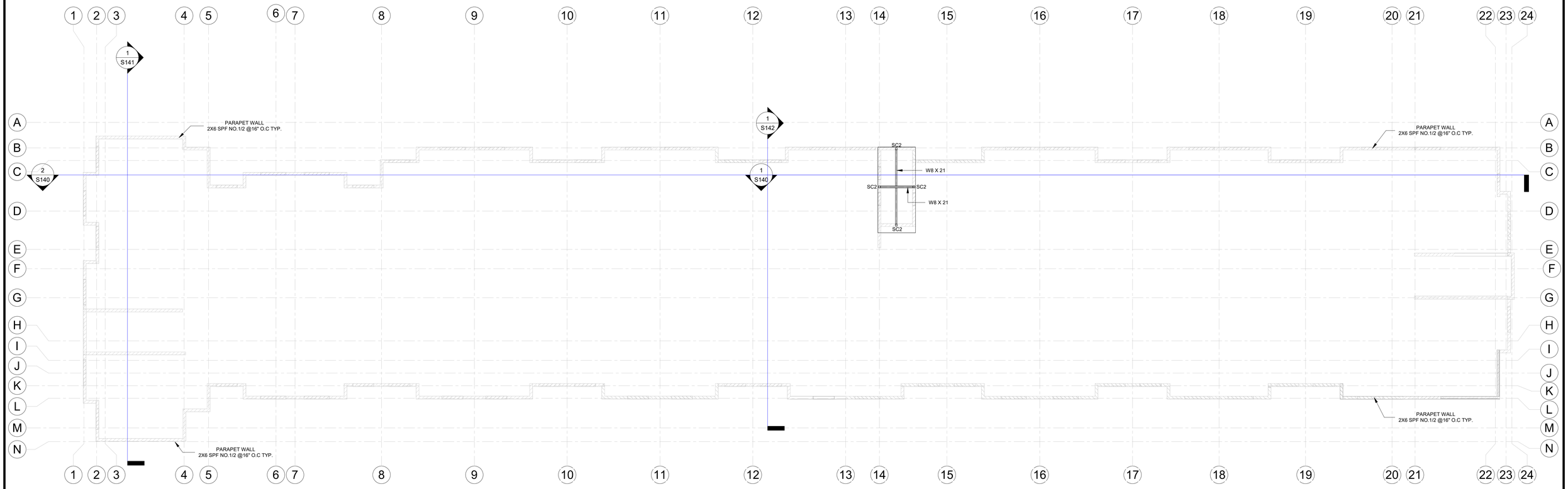

1 PARAPET LEVEL FRAMING PLAN
3/32" = 1'-0"

SYMBOL	LEGEND
HD(X)	HOLD DOWN
	SHEAR WALL
	EXTERNAL LOAD BEARING WALL
	INTERNAL LOAD BEARING WALL
	INFILL / NLP WALL
	LGS POST
	STEEL BEAM
	STEEL COLUMN
	HEADER
	WEBBED BEAM
	SHAFT OPENING

WOOD PANEL SCHEDULE

MARK	TYPE	SIZE	O.C.S
RP1	JOIST	2X6 SPF NO.1/NO.2	16"

JS ARCHITECTS
9726 E. 42nd St. Suite 153, Tulsa, 74146
918.640.6800 - jhnsanford@aol.com
COPYRIGHT 2026 John Sanford

6-08-2026
NOT VALID FOR CONSTRUCTION UNLESS SIGNED IN THIS BLOCK

DEVELOPED BY
HI-TECH HOSPITALITY
Residence INN BY MARRIOTT

RESIDENCE INN BY MARRIOTT

NW CORNER OF PINE & MEMORIAL, TULSA, OK

THESE DRAWINGS ARE INTENDED FOR REVIEW AND PERMITTING. DRAWINGS ARE NOT TO BE USED FOR CONSTRUCTION WITHOUT ARCHITECT'S AND ENGINEER'S SIGNATURE AND THEIR DATE OF ISSUE FOR CONSTRUCTION

TULSA AIRPORT RIBM
61208
Project Number

No.	Description	Date

SHEET
S119
PARAPET LEVEL FRAMING PLAN

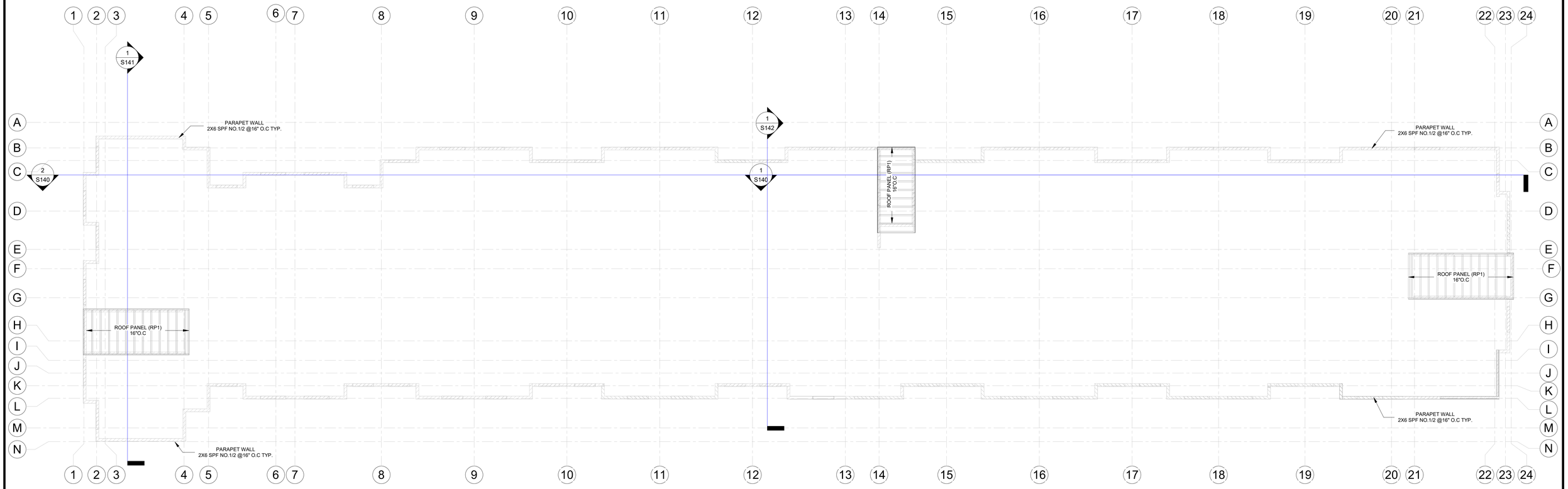

1 TOP ROOF FRAMING PLAN HEAD ROOM
3/32" = 1'-0"

SYMBOL	LEGEND
HD(X)	HOLD DOWN
	SHEAR WALL
	EXTERNAL LOAD BEARING WALL
	INTERNAL LOAD BEARING WALL
	INFILL / NLP WALL
	LGS POST
	STEEL BEAM
	STEEL COLUMN
	HEADER
	WEBBED BEAM
	SHAFT OPENING

WOOD PANEL SCHEDULE

MARK	TYPE	SIZE	O.C.S
RP1	JOIST	2X6 SPF NO.1/NO.2	16"

JS ARCHITECTS
9726 E. 42nd St. Suite 153, Tulsa, 74146
918.640.6800 - jhnsanford@aol.com
COPYRIGHT 2026 John Sanford

6-08-2026

NOT VALID FOR CONSTRUCTION UNLESS SIGNED IN THIS BLOCK

DEVELOPED BY
HI-TECH HOSPITALITY
Residence INN BY MARRIOTT

RESIDENCE INN BY MARRIOTT

NW CORNER OF PINE & MEMORIAL, TULSA, OK

THESE DRAWINGS ARE INTENDED FOR REVIEW AND PERMITTING. DRAWINGS ARE NOT TO BE USED FOR CONSTRUCTION WITHOUT ARCHITECT'S AND ENGINEER'S SIGNATURE AND THEIR DATE OF ISSUE FOR CONSTRUCTION

TULSA AIRPORT RIBM
61208
Project Number

No.	Description	Date

SHEET
S120
HEAD ROOM TOP ROOF FRAMING LAYOUT PLAN

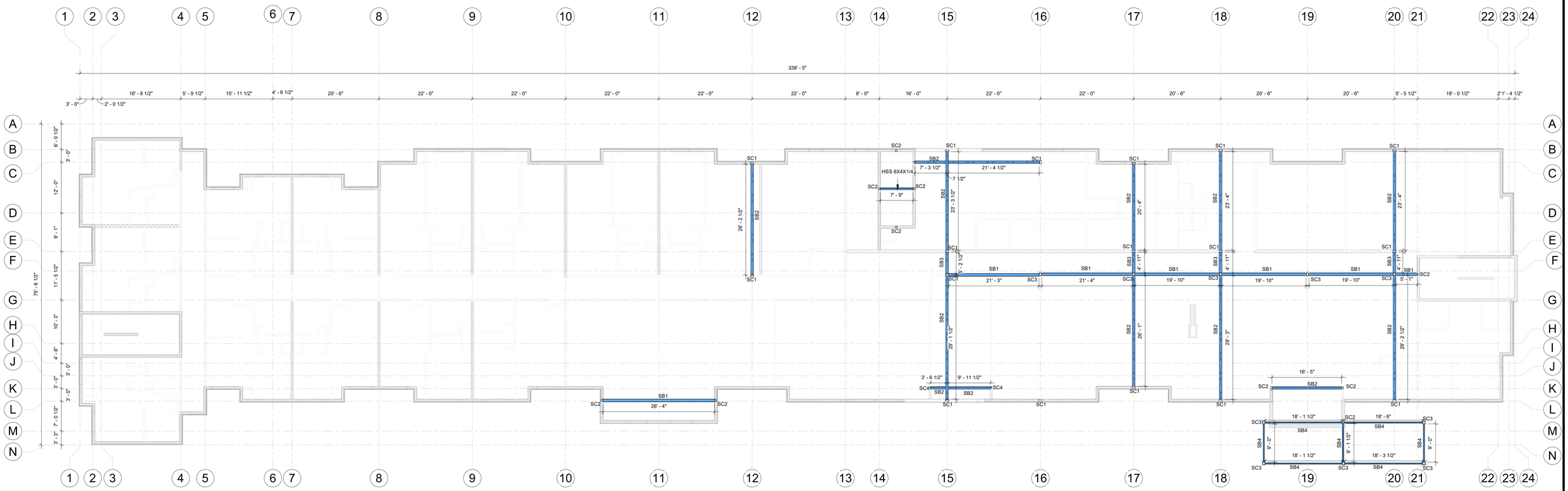

SB		
Structural Material	**System Length**	**Count**
Steel ASTM A500, Grade B, Rectangular and Square	**10' - 1 13/16"**	**20**
Steel ASTM A992	**11' - 0"**	**15**
Steel ASTM A992	**11' - 4"**	**1**
Steel ASTM A500, Grade B, Rectangular and Square	**12' - 6"**	**1**
Steel ASTM A992	**12' - 6"**	**21**
Steel ASTM A500, Grade B, Rectangular and Square	**13' - 0"**	**5**
Softwood, Lumber	**40' - 3"**	**2**
Steel ASTM A992	**50' - 0"**	**4**
Softwood, Lumber	**50' - 3"**	**1**
Softwood, Lumber	**50' - 11"**	**1**
Softwood, Lumber	**52' - 9"**	**8**
Grand total: 79		

JS ARCHITECTS
9726 E. 42nd St. Suite 153, Tulsa, 74146
918.640.6800 - jhnsanford@aol.com
COPYRIGHT 2026 John Sanford

6-08-2026

NOT VALID FOR CONSTRUCTION UNLESS SIGNED IN THIS BLOCK

DEVELOPED BY
HI-TECH HOSPITALITY
Residence INN BY MARRIOTT

RESIDENCE INN BY MARRIOTT

NW CORNER OF PINE & MEMORIAL, TULSA, OK

THESE DRAWINGS ARE INTENDED FOR REVIEW AND PERMITTING. DRAWINGS ARE NOT TO BE USED FOR CONSTRUCTION WITHOUT ARCHITECT'S AND ENGINEER'S SIGNATURE AND THEIR DATE OF ISSUE FOR CONSTRUCTION.

TULSA AIRPORT RIBM
61208
Project Number

No.	Description	Date

SHEET
S121
FIRST FLOOR HRS PLAN

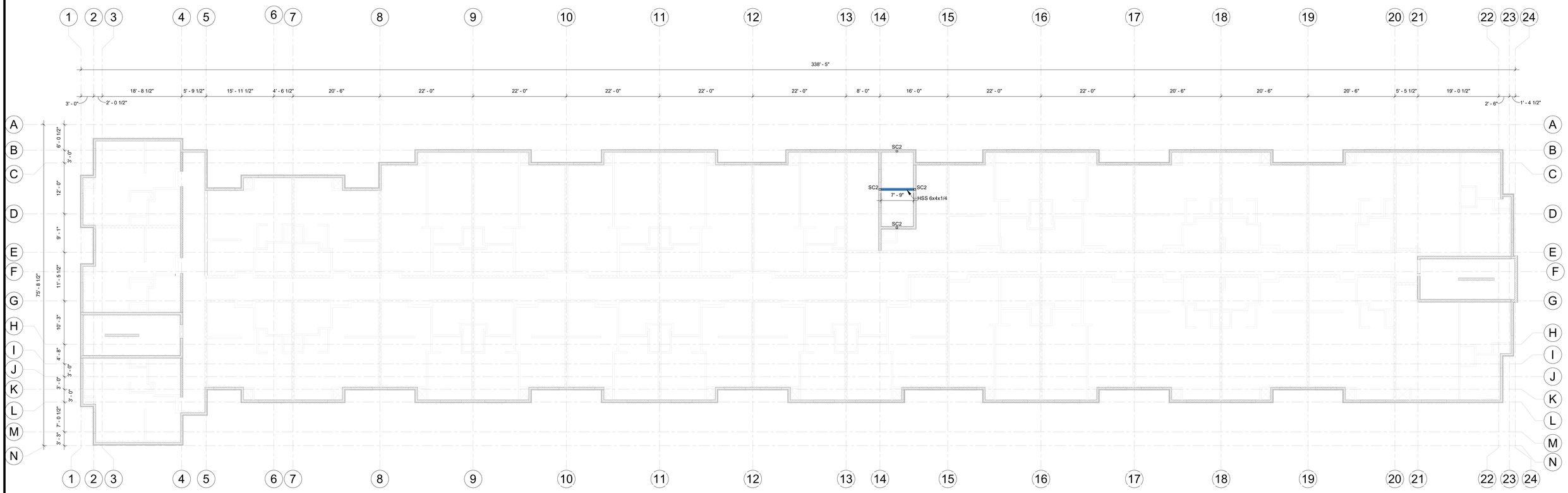

1 TYPICAL FLOOR FRAMING HRS LAYOUT PLAN
3/32" = 1'-0"

SB		
Structural Material	**System Length**	**Count**
Steel ASTM A500, Grade B, Rectangular and Square	10' - 1 13/16"	20
Steel ASTM A992	11' - 0"	15
Steel ASTM A992	11' - 4"	1
Steel ASTM A500, Grade B, Rectangular and Square	12' - 6"	1
Steel ASTM A992	12' - 6"	21
Steel ASTM A500, Grade B, Rectangular and Square	13' - 0"	5
Softwood, Lumber	40' - 3"	2
Steel ASTM A992	50' - 0"	4
Softwood, Lumber	50' - 3"	1
Softwood, Lumber	50' - 11"	1
Softwood, Lumber	52' - 9"	8
Grand total: 79		

JS ARCHITECTS
9726 E. 42nd St. Suite 153, Tulsa, 74146
918.640.6800 - jhnsanford@aol.com
COPYRIGHT 2026 John Sanford

6-08-2026

NOT VALID FOR CONSTRUCTION UNLESS SIGNED IN THIS BLOCK

DEVELOPED BY
HI-TECH HOSPITALITY
Residence INN BY MARRIOTT

RESIDENCE INN BY MARRIOTT

NW CORNER OF PINE & MEMORIAL, TULSA, OK

THESE DRAWINGS ARE INTENDED FOR REVIEW AND PERMITTING. DRAWINGS ARE NOT TO BE USED FOR CONSTRUCTION WITHOUT ARCHITECT'S AND ENGINEER'S SIGNATURE AND THEIR DATE OF ISSUE FOR CONSTRUCTION.

TULSA AIRPORT RIBM
61208
Project Number

No.	Description	Date

SHEET
S122
TYPICAL FLOOR HRS PLAN

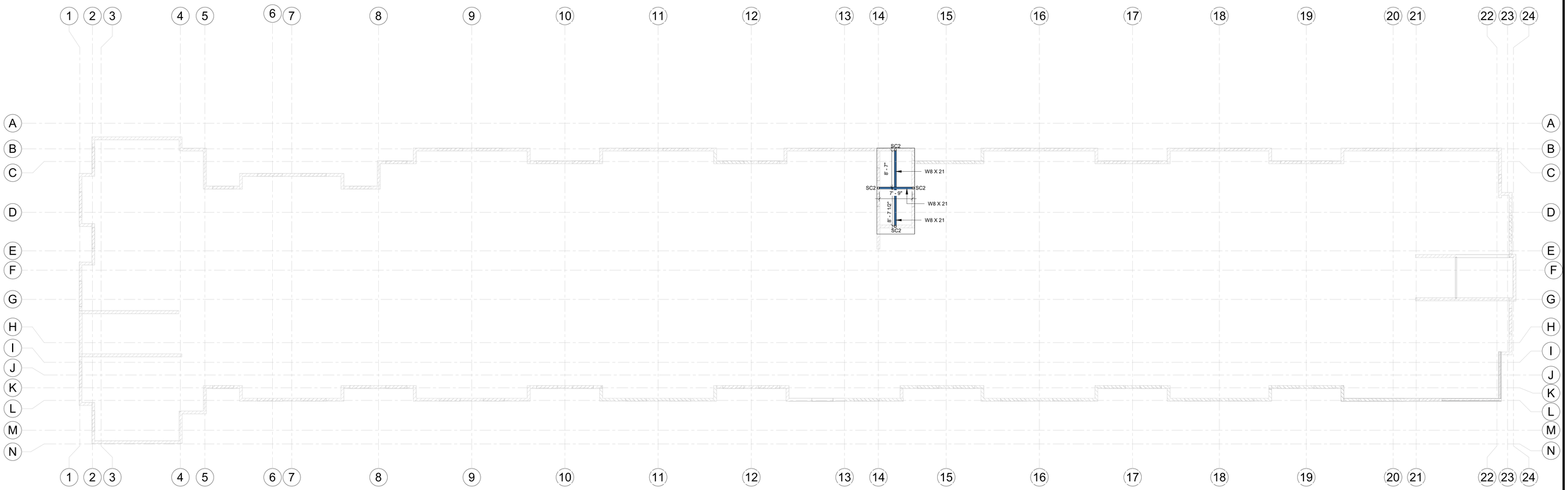

1 TOP ROOF HRS PLAN
3/32" = 1'-0"

SB		
Structural Material	**System Length**	**Count**
Steel ASTM A500, Grade B, Rectangular and Square	10' - 1 13/16"	20
Steel ASTM A992	11' - 0"	15
Steel ASTM A992	11' - 4"	1
Steel ASTM A500, Grade B, Rectangular and Square	12' - 6"	1
Steel ASTM A992	12' - 6"	21
Steel ASTM A500, Grade B, Rectangular and Square	13' - 0"	5
Softwood, Lumber	40' - 3"	2
Steel ASTM A992	50' - 0"	4
Softwood, Lumber	50' - 3"	1
Softwood, Lumber	50' - 11"	1
Softwood, Lumber	52' - 9"	8
Grand total: 79		

JS
ARCHITECTS
9726 E. 42nd St. Suite 153, Tulsa, 74146
918.640.6800 - jhnsanford@aol.com
COPYRIGHT 2026 John Sanford

6-08-2026

NOT VALID FOR CONSTRUCTION UNLESS SIGNED IN THIS BLOCK

DEVELOPED BY
HI-TECH HOSPITALITY
Residence INN BY MARRIOTT

RESIDENCE INN BY MARRIOTT

NW CORNER OF PINE & MEMORIAL, TULSA, OK

THESE DRAWINGS ARE INTENDED FOR REVIEW AND PERMITTING. DRAWINGS ARE NOT TO BE USED FOR CONSTRUCTION WITHOUT ARCHITECT'S AND ENGINEER'S SIGNATURE AND THEIR DATE OF ISSUE FOR CONSTRUCTION.

TULSA AIRPORT RIBM
61208
Project Number

No.	Description	Date

SHEET
S123
HEADROOM/TOP ROOF HRS PLAN

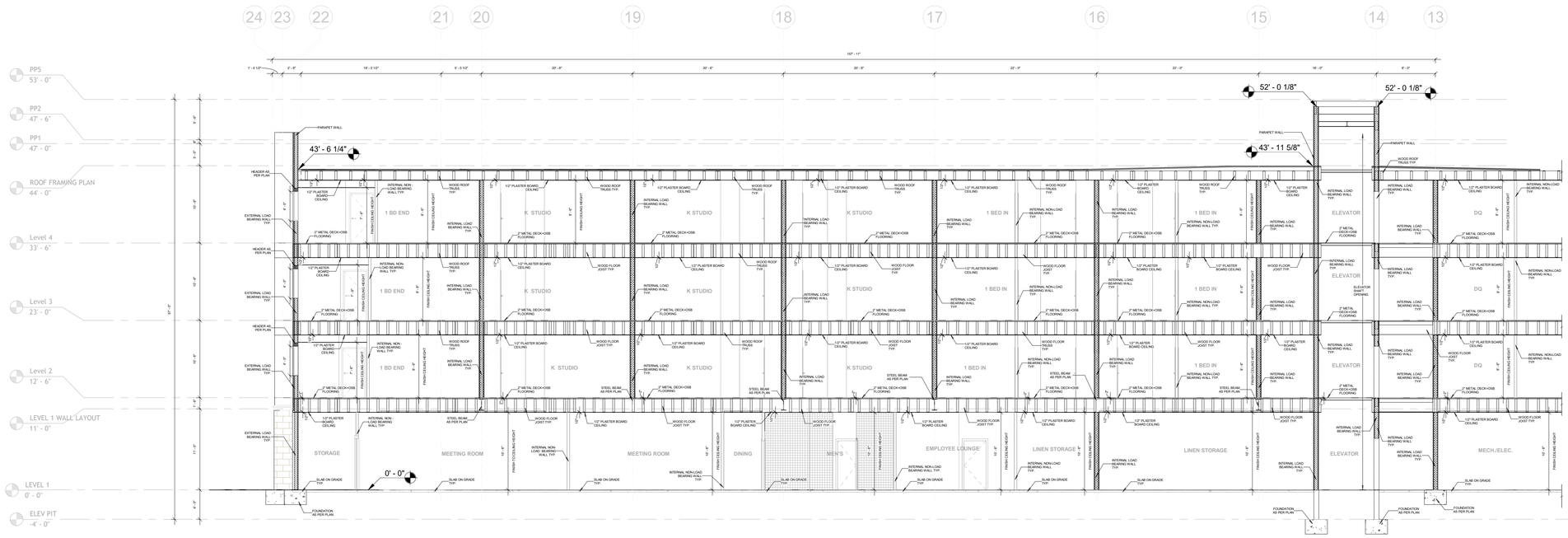

1 BUILDING SECTION
1/8" = 1'-0"

2 BUILDING SECTION
1/8" = 1'-0"

JS ARCHITECTS
9726 E. 42nd St. Suite 153, Tulsa, 74146
918.640.6800 - jhnsanford@aol.com
COPYRIGHT 2026 John Sanford

6-08-2026

NOT VALID FOR CONSTRUCTION UNLESS SIGNED IN THIS BLOCK

DEVELOPED BY
HI-TECH HOSPITALITY

Residence INN BY MARRIOTT

RESIDENCE INN BY MARRIOTT

NW CORNER OF PINE & MEMORIAL, TULSA, OK

THESE DRAWINGS ARE INTENDED FOR REVIEW AND PERMITTING. DRAWINGS ARE NOT TO BE USED FOR CONSTRUCTION WITHOUT ARCHITECT'S AND ENGINEER'S SIGNATURE AND THEIR DATE OF ISSUE FOR CONSTRUCTION.

TULSA AIRPORT RIBM
61208
Project Number

No.	Description	Date

SHEET
S140
BUILDING SECTION 1

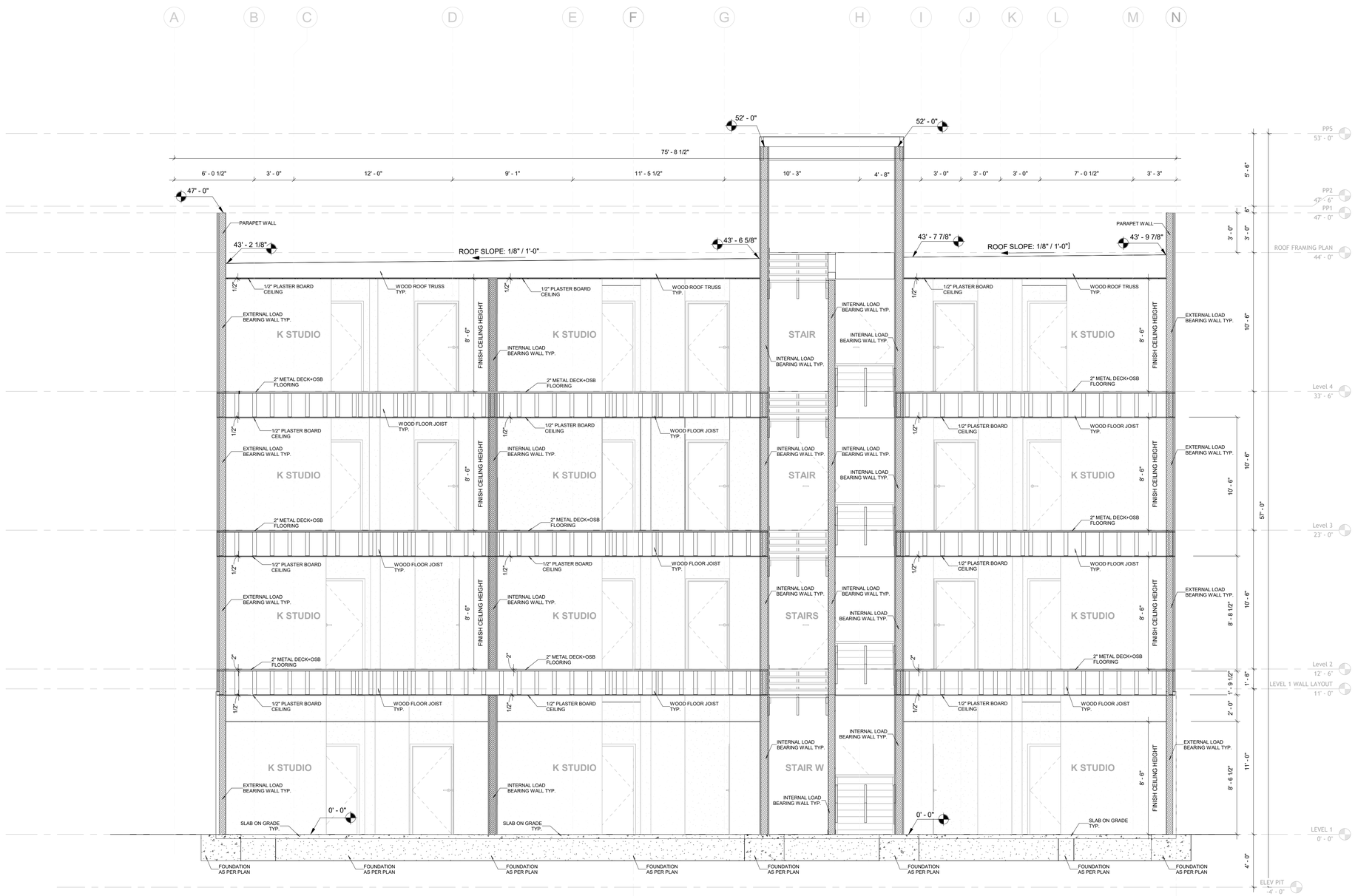

1 BUILDING SECTION 2
1/4" = 1'-0"

JS ARCHITECTS
9726 E. 42nd St. Suite 153, Tulsa, 74146
918.640.6800 - jhnsanford@aol.com

COPYRIGHT 2026 John Sanford

6-08-2026

NOT VALID FOR CONSTRUCTION UNLESS SIGNED IN THIS BLOCK

DEVELOPED BY
HI-TECH HOSPITALITY

Residence INN BY MARRIOTT

RESIDENCE INN BY MARRIOTT

NW CORNER OF PINE & MEMORIAL, TULSA, OK

THESE DRAWINGS ARE INTENDED FOR REVIEW AND PERMITTING. DRAWINGS ARE NOT TO BE USED FOR CONSTRUCTION WITHOUT ARCHITECT'S AND ENGINEER'S SIGNATURE AND THEIR DATE OF ISSUE FOR CONSTRUCTION.

TULSA AIRPORT RIBM
61208
Project Number

No.	Description	Date

SHEET
S141
BUILDING SECTION 2

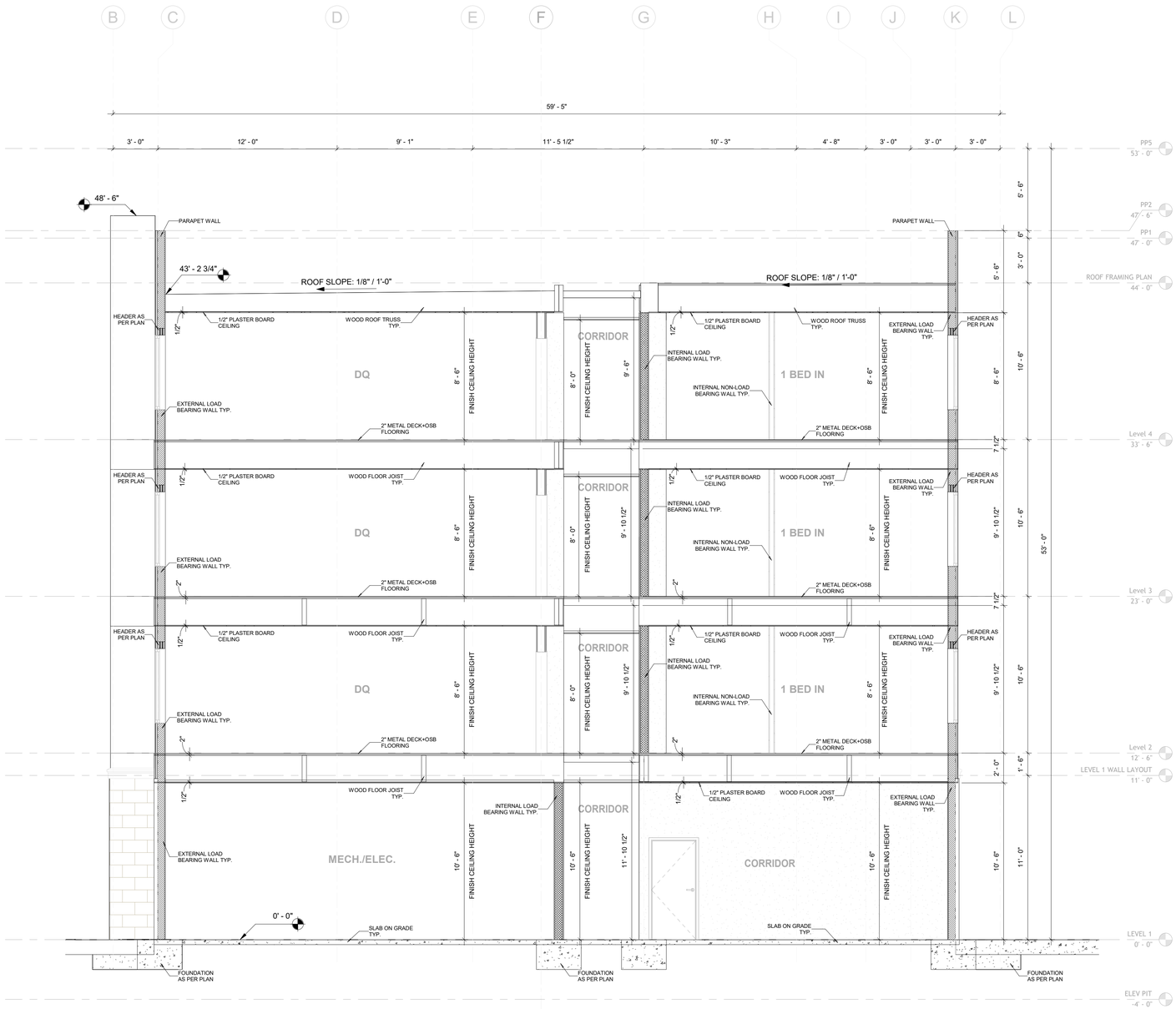

1 BUILDING SECTION - 3
1/4" = 1'-0"

JS ARCHITECTS
9726 E. 42nd St. Suite 153, Tulsa, 74146
918.640.6800 - jhnsanford@aol.com

COPYRIGHT 2026 John Sanford

6-08-2026

NOT VALID FOR CONSTRUCTION UNLESS SIGNED IN THIS BLOCK

DEVELOPED BY
HI-TECH HOSPITALITY
Residence INN BY MARRIOTT

RESIDENCE INN BY MARRIOTT

NW CORNER OF PINE & MEMORIAL, TULSA, OK

THESE DRAWINGS ARE INTENDED FOR REVIEW AND PERMITTING. DRAWINGS ARE NOT TO BE USED FOR CONSTRUCTION WITHOUT ARCHITECT'S AND ENGINEER'S SIGNATURE AND THEIR DATE OF ISSUE FOR CONSTRUCTION.

TULSA AIRPORT RIBM
61208
Project Number

No.	Description	Date

SHEET
S142
BUILDING SECTION 3

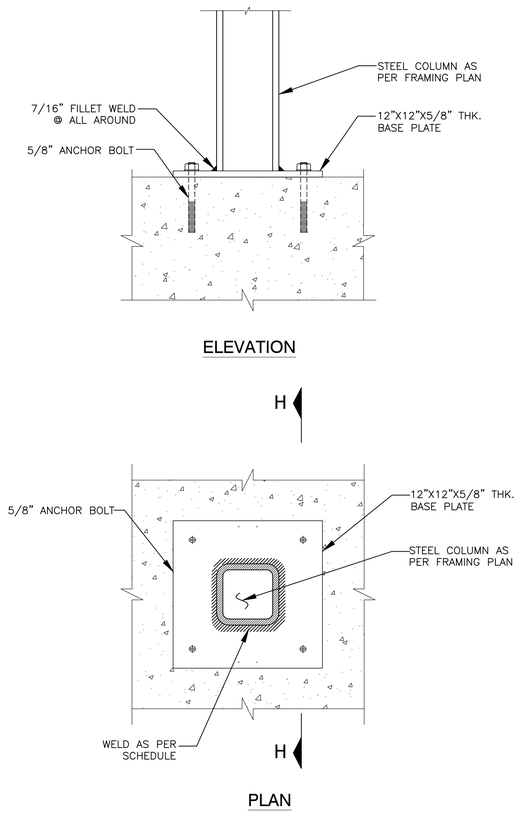

1 BASE PLATE DETAIL OF STEEL COLUMN
SCALE: NTS

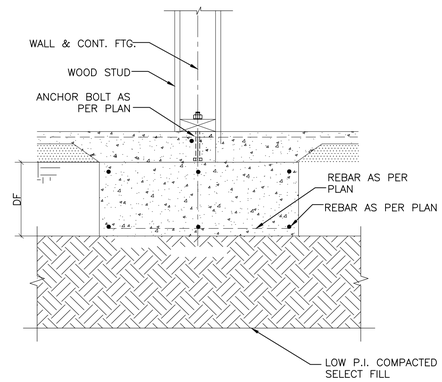

2 SECTION
SCALE:- NTS

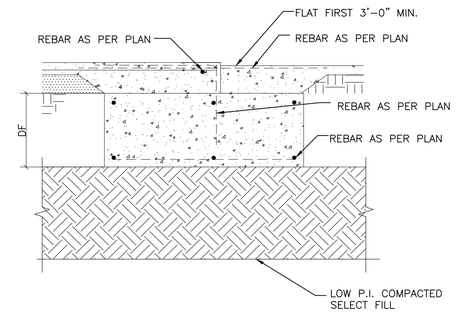

3 SECTION
SCALE:- NTS

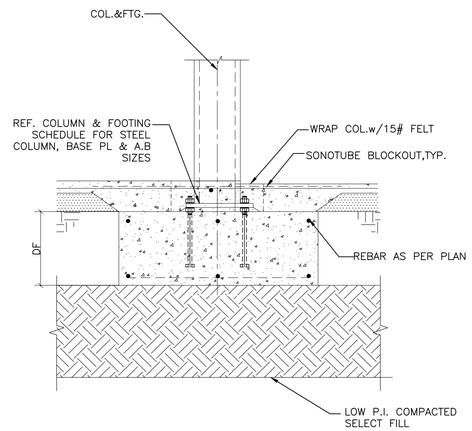

4 SECTION
SCALE:- NTS

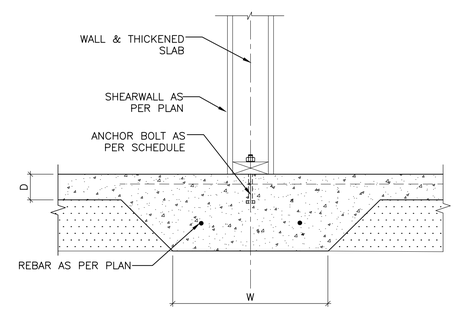

5 SECTION
SCALE:- NTS

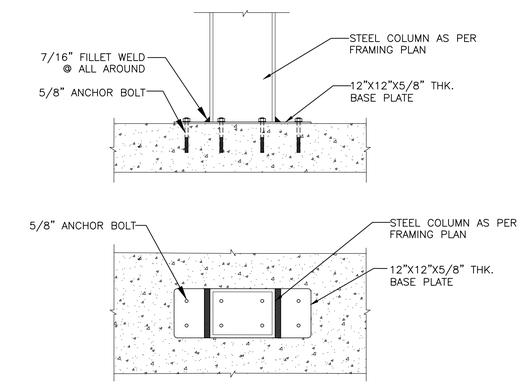

6 PLATE SECTION
SCALE:- NTS

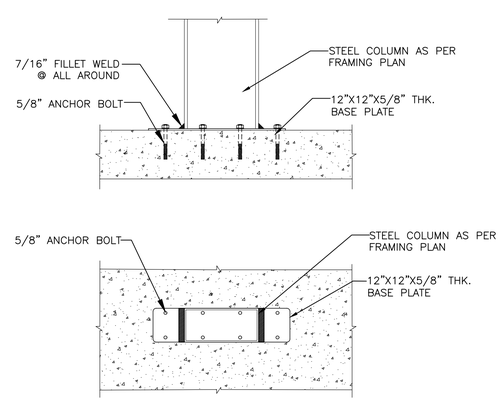

7 PLATE SECTION
SCALE:- NTS

JS ARCHITECTS
9726 E. 42nd St. Suite 153, Tulsa, 74146
918.640.6800 - jhrsanford@aol.com
COPYRIGHT 2026 John Sanford

6-08-2026

NOT VALID FOR CONSTRUCTION UNLESS SIGNED IN THIS BLOCK

DEVELOPED BY
HI-TECH HOSPITALITY
Residence INN BY MARRIOTT

RESIDENCE INN BY MARRIOTT

NW CORNER OF PINE & MEMORIAL, TULSA, OK

THESE DRAWINGS ARE INTENDED FOR REVIEW AND PERMITTING. DRAWINGS ARE NOT TO BE USED FOR CONSTRUCTION WITHOUT ARCHITECT'S AND ENGINEER'S SIGNATURE AND THEIR DATE OF ISSUE FOR CONSTRUCTION.

TULSA AIRPORT RIBM
61208
Project Number

No.	Description	Date

SHEET
S143
DETAILS

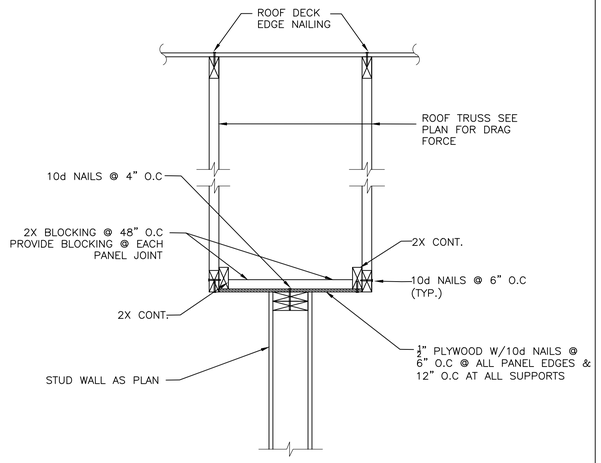

1 ROOF TRUSS TO INTERNAL WALL CONNCECTION
SCALE:- NTS

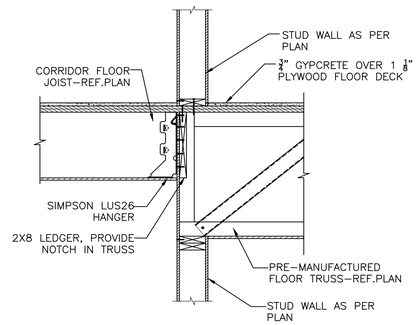

2 JOIST HANGER DTEAIL @ CORRIDOR WALL
SCALE:- NTS

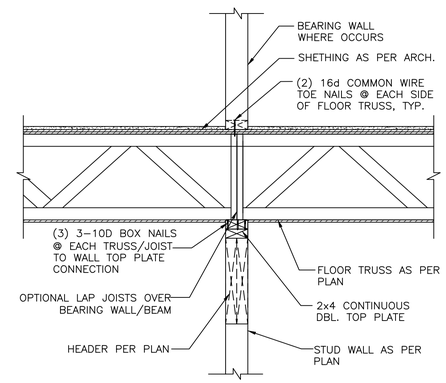

3 WOOD FLOOR TO INTERIOR BEARING WALL
SCALE:- NTS

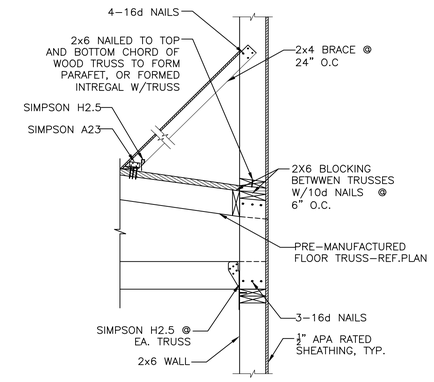

4 ROOF TRUSS TO WALL
SCALE:- NTS

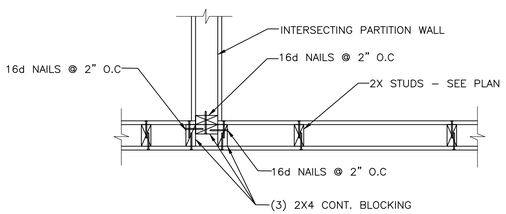

05 TYP. WALL JUNCTION
SCALE:- NTS

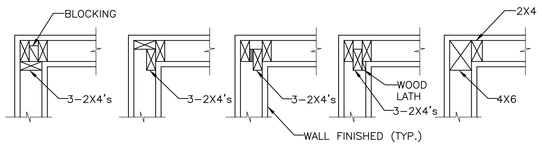

06 TYP. CORNER & INTERSECTING WALL FRAMING DETAIL
SCALE:- NTS

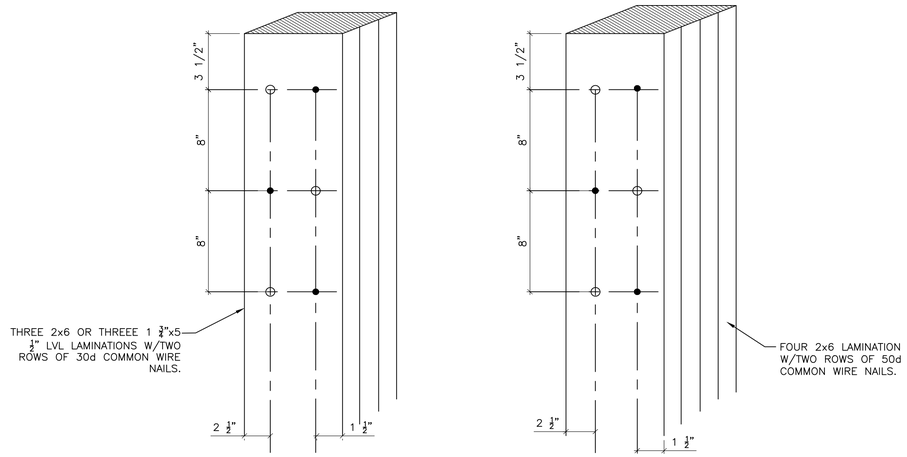

07 TYP. NAILING DETAIL FOR BUILT-UP COLUMNS
SCALE:- NTS

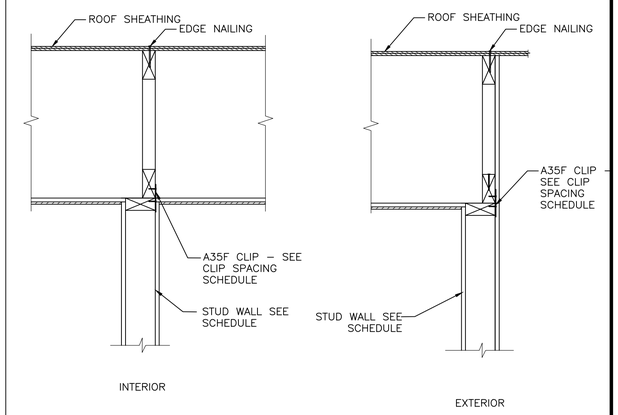

08 ROOOF TRUSS AT EXTERNAL WALL CONNCECTION
SCALE:- NTS

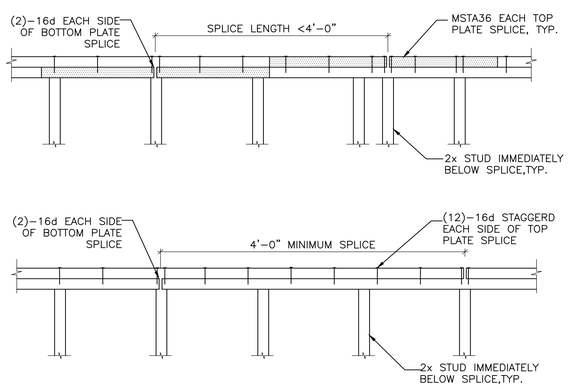

09 TYP. TOP PLATE SPLICE DETAIL
SCALE:- NTS

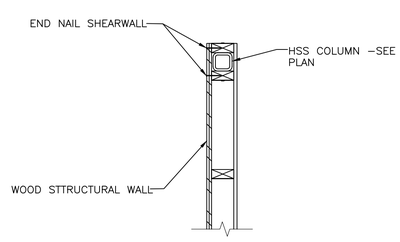

10 HSS COLUMN IN WALL
SCALE:- NTS

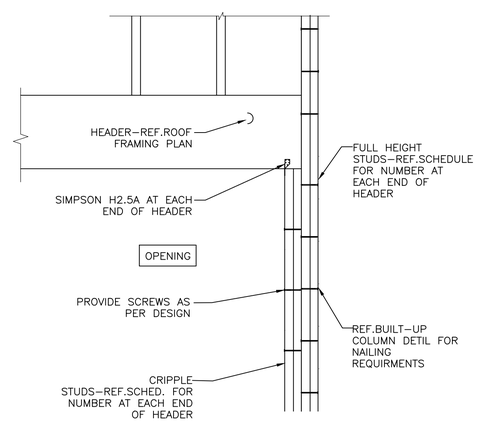

11 TYP. FRAMED OPENING ELEVATION
SCALE:- NTS

JS ARCHITECTS
9726 E. 42nd St. Suite 153, Tulsa, 74146
918.640.6800 - jhnsanford@aol.com
COPYRIGHT 2026 John Sanford

6-08-2026

NOT VALID FOR CONSTRUCTION UNLESS SIGNED IN THIS BLOCK

DEVELOPED BY
HI-TECH HOSPITALITY
Residence INN BY MARRIOTT

RESIDENCE INN BY MARRIOTT

NW CORNER OF PINE & MEMORIAL, TULSA, OK

THESE DRAWINGS ARE INTENDED FOR REVIEW AND PERMITTING. DRAWINGS ARE NOT TO BE USED FOR CONSTRUCTION WITHOUT ARCHITECT'S AND ENGINEER'S SIGNATURE AND THEIR DATE OF ISSUE FOR CONSTRUCTION.

TULSA AIRPORT RIBM 61208
Project Number

No.	Description	Date

SHEET
S144
DETAILS

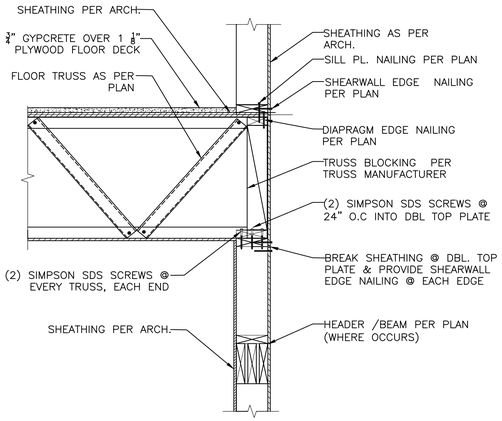

1 FLOOR FRAMING PERPENDICULAR
SCALE:- NTS

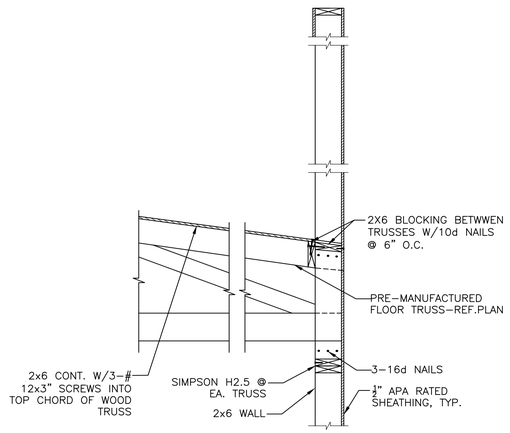

2 FRAMING SECTION @ ROOF
SCALE:- NTS

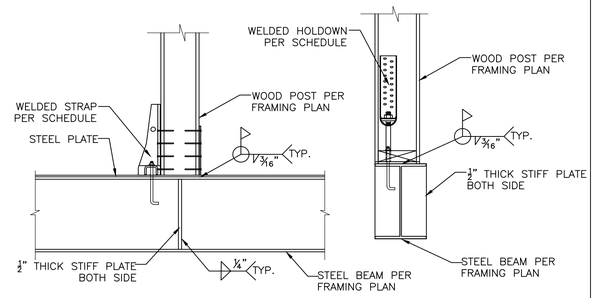

3 HOLD-DOWN POST @ STEEL BEAM CONNECTION
SCALE:- NTS

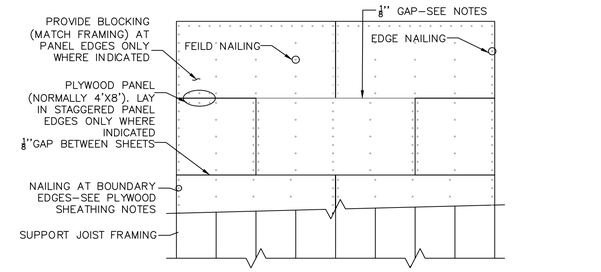

NOTE:
1. SEE "PLYWOOD SHEATHING NOTES" FOR NAILING REQUIREMENTS. CAREFULL CONSIDERATION THAT NO ARE TO BE OVER-DRIVEN BY MORE THAT 1/16".

4 TYPICAL ROOF/ FLOOR DIAPHRAGM DETAIL
SCALE:- NTS

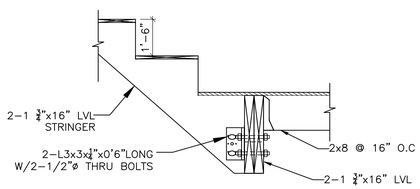

5 STAIR SECTION
SCALE:- N.T.S

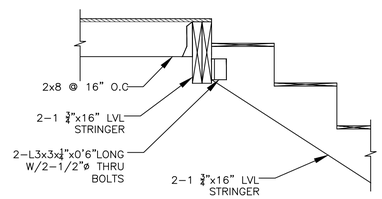

6 STAIR SECTION
SCALE:- N.T.S

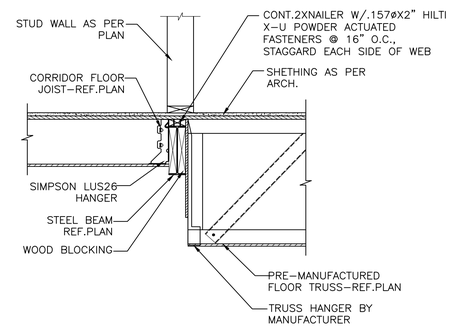

7 JOIST HANGER DTEAIL @ STEEL BEAM
SCALE:- NTS

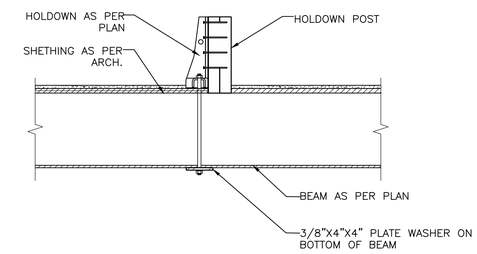

8 STRUCTURAL POST TO WOOD BEAM DETAIL
SCALE:- NTS

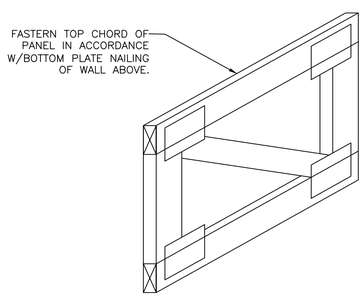

9 PREFAB TRUSS PANEL
SCALE:- NTS

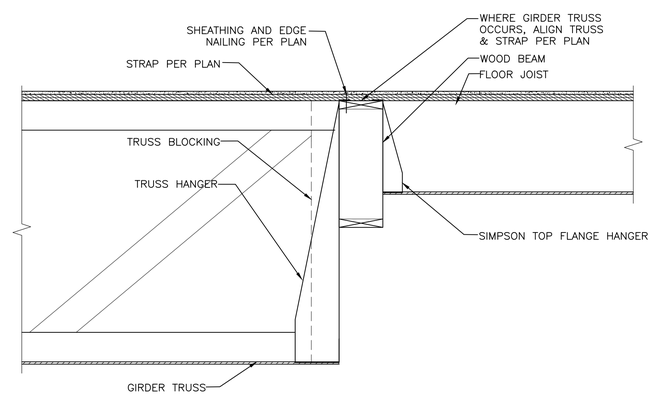

10 CORRIDOR FRAMING BEARING DETAIL
SCALE:- NTS

JS ARCHITECTS
9726 E. 42nd St. Suite 153, Tulsa, 74146
918.640.6800 - jhrsanford@aol.com
COPYRIGHT 2026 John Sanford

6-08-2026

NOT VALID FOR CONSTRUCTION UNLESS SIGNED IN THIS BLOCK

DEVELOPED BY
HI-TECH HOSPITALITY
Residence INN BY MARRIOTT

RESIDENCE INN BY MARRIOTT

NW CORNER OF PINE & MEMORIAL, TULSA, OK

THESE DRAWINGS ARE INTENDED FOR REVIEW AND PERMITTING. DRAWINGS ARE NOT TO BE USED FOR CONSTRUCTION WITHOUT ARCHITECT'S AND ENGINEER'S SIGNATURE AND THEIR DATE OF ISSUE FOR CONSTRUCTION.

TULSA AIRPORT RIBM
61208
Project Number

No.	Description	Date

SHEET
S145
DETAILS

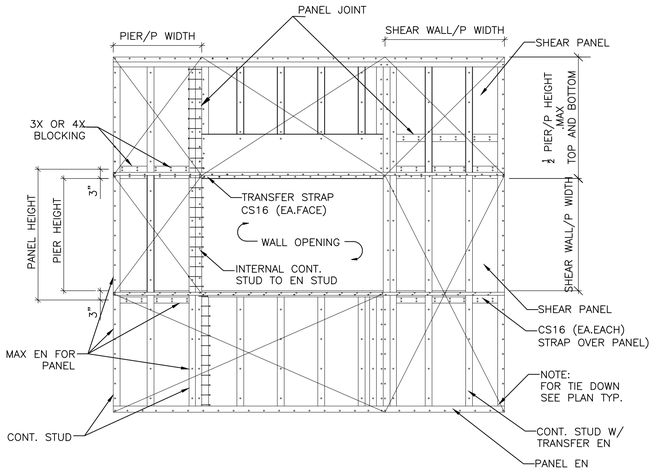

1 WORK THIS DETAIL WITH SHEAR WALL SCHEDULE
SCALE:- NTS

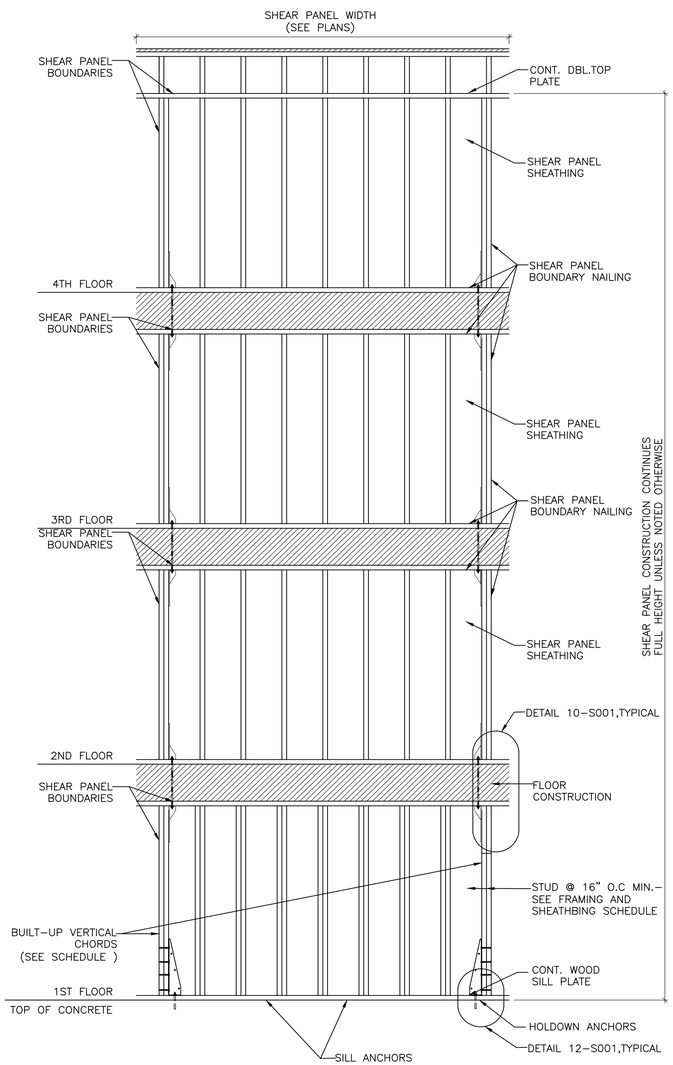

2 INTERIOR WOOD FRAME SHEAR PANEL ELEVATION
SCALE:- NTS

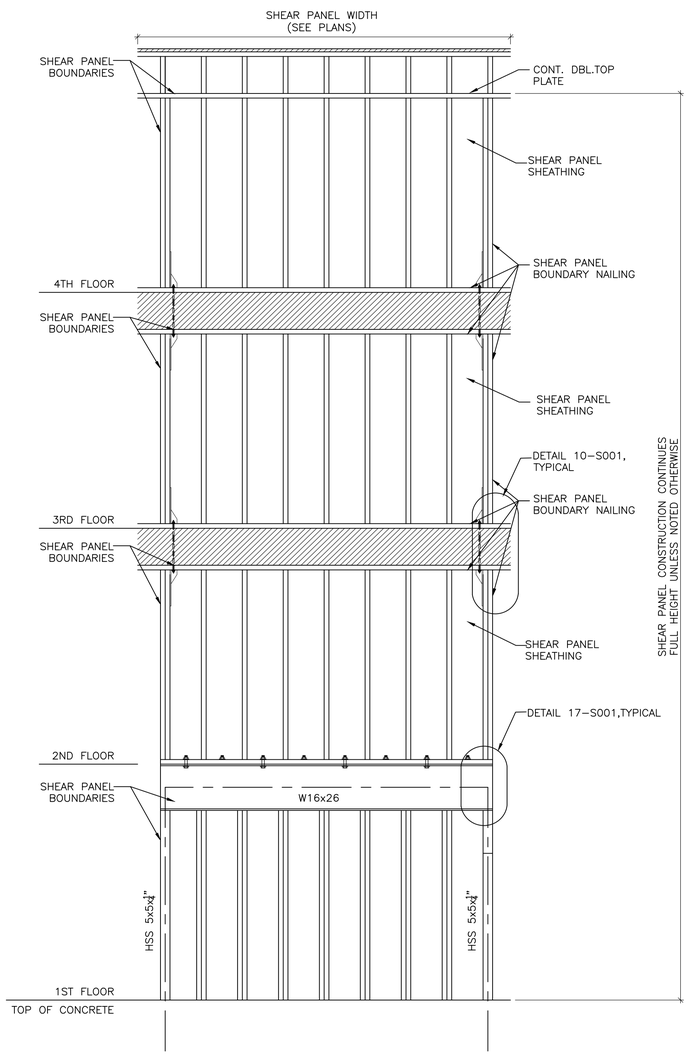

3 INTERIOR FRAME SHEAR PANEL ELEVATION
SCALE:- NTS

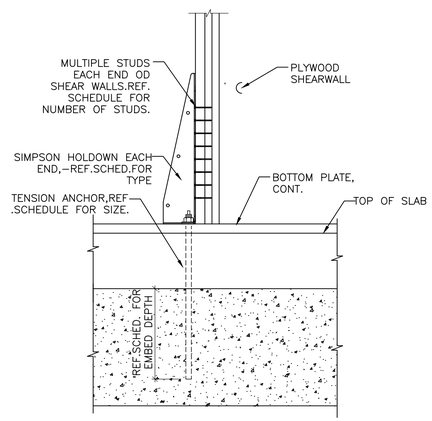

4 SHEARWALL HOLDOWN
SCALE:- NTS

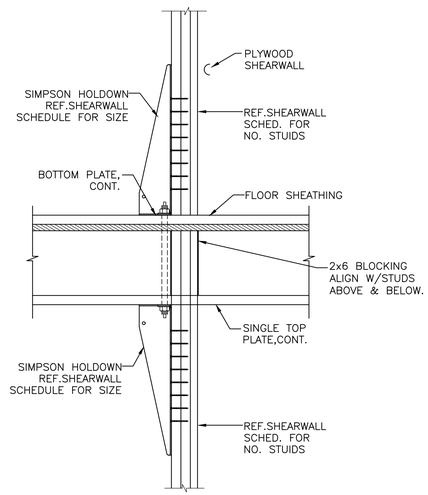

5 SHEARWALL HOLDOWN
SCALE:- NTS

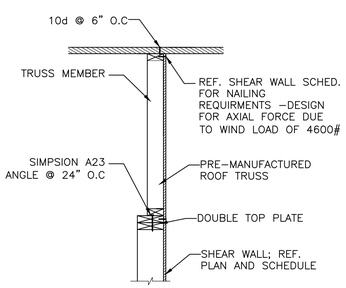

6 PARALLEL TRUSS TO SHEAR WALL DETAIL
SCALE:NTS

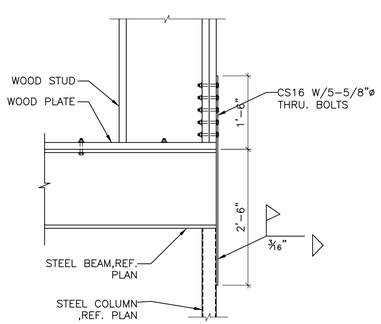

7 STEEL BEAM TO STRUCTURAL DETAI L
SCALE:- NTS

JS
ARCHITECTS
9726 E. 42nd St. Suite 153, Tulsa, 74146
918.640.6800 - jhnsanford@aol.com
COPYRIGHT 2026 John Sanford

6-08-2026

NOT VALID FOR CONSTRUCTION UNLESS SIGNED IN THIS BLOCK

DEVELOPED BY
HI-TECH HOSPITALITY
Residence INN BY MARRIOTT

RESIDENCE INN BY MARRIOTT

NW CORNER OF PINE & MEMORIAL, TULSA, OK

THESE DRAWINGS ARE INTENDED FOR REVIEW AND PERMITTING. DRAWINGS ARE NOT TO BE USED FOR CONSTRUCTION WITHOUT ARCHITECT'S AND ENGINEER'S SIGNATURE AND THEIR DATE OF ISSUE FOR CONSTRUCTION.

TULSA AIRPORT RIBM
61208
Project Number

No.	Description	Date

SHEET
S146
DETAILS

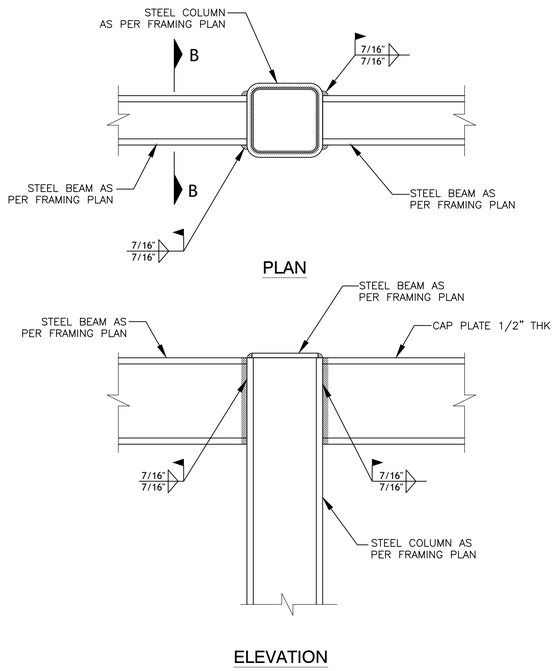

1 HSS STEEL COLUMN TO HSS STEEL BEAM CONNECTION DETAIL
SCALE:NTS

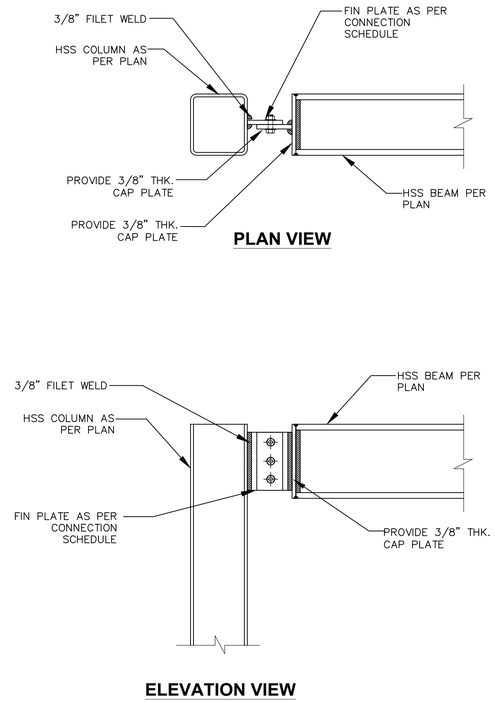

2 HSS COLUMN CONNECTION WITH HSS BEAM DETAIL
SCALE:NTS

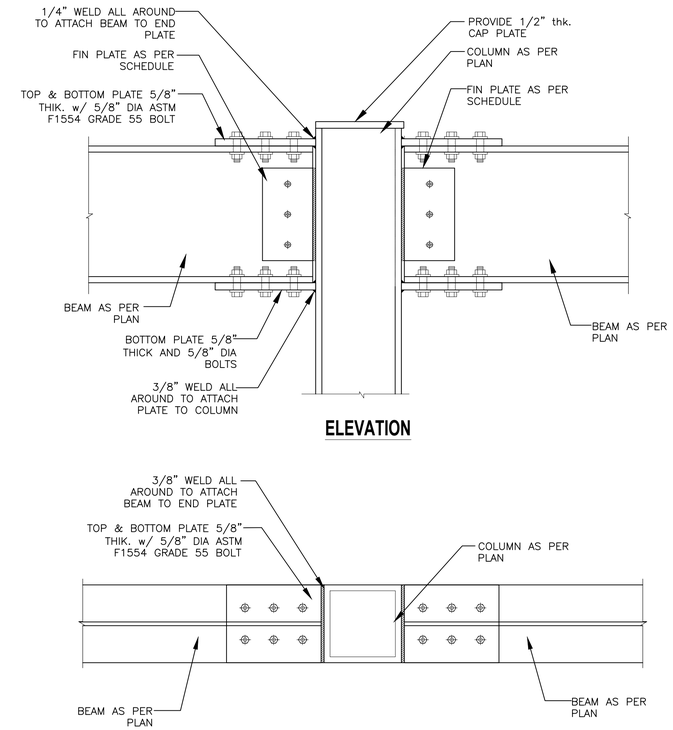

3 INTERIOR FRAME SHEAR PANEL ELEVATION
SCALE:- NTS

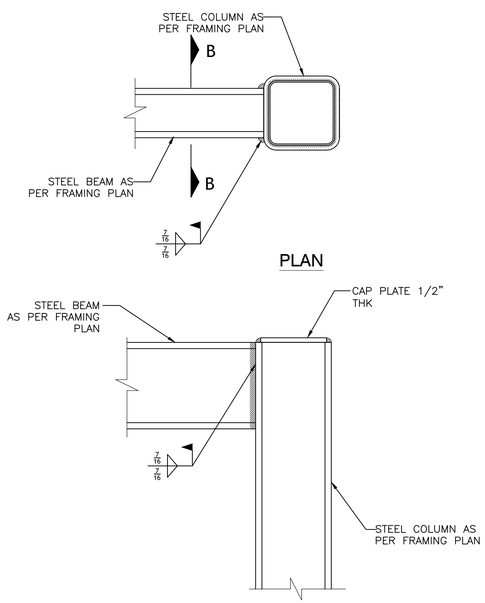

4 HSS STEEL COLUMN TO HSS STEEL BEAM CONNECTION DETAIL
SCALE:NTS

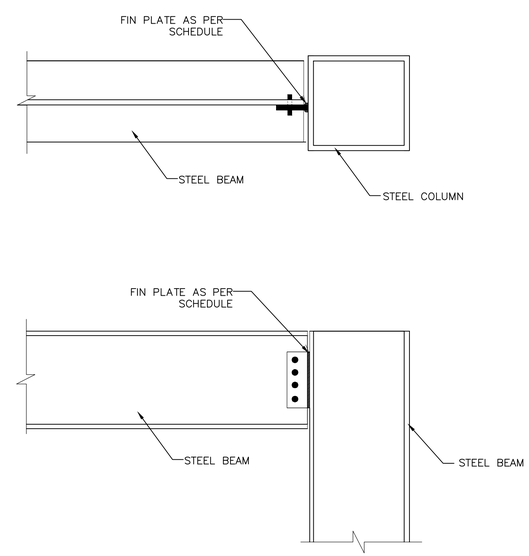

5 INTERIOR FRAME SHEAR PANEL ELEVATION
SCALE:- NTS

JS ARCHITECTS
9726 E. 42nd St. Suite 153, Tulsa, 74146
918.640.6800 - jhrsanford@aol.com
COPYRIGHT 2026 John Sanford

6-08-2026

NOT VALID FOR CONSTRUCTION UNLESS SIGNED IN THIS BLOCK

DEVELOPED BY
HI-TECH HOSPITALITY
Residence INN BY MARRIOTT

RESIDENCE INN BY MARRIOTT

NW CORNER OF PINE & MEMORIAL, TULSA, OK

THESE DRAWINGS ARE INTENDED FOR REVIEW AND PERMITTING. DRAWINGS ARE NOT TO BE USED FOR CONSTRUCTION WITHOUT ARCHITECT'S AND ENGINEER'S SIGNATURE AND THEIR DATE OF ISSUE FOR CONSTRUCTION.

TULSA AIRPORT RIBM
61208
Project Number

No.	Description	Date

SHEET
S147
DETAILS