Experiment - 5.1

Realization of the internal architecture of 4:1 Multiplexer

Objective - To design a 4:1 multiplier circuit

Theory - Multiplexer is a combinational logic circuit which allows only one input at a particular time to generate the output. The signals which control which input will be reflected at the output end is determined by the SELECT INPUT lines. A multiplexer is often written as MUX in the abbreviated form. It is also called as Many-to-One circuit. This is because of its ability to select one signal out of many inputs.
In 4:1 MUX, there will be 4 input lines and 1 output line. And to control which input should be selected out of these 4, we need 2 selection lines.

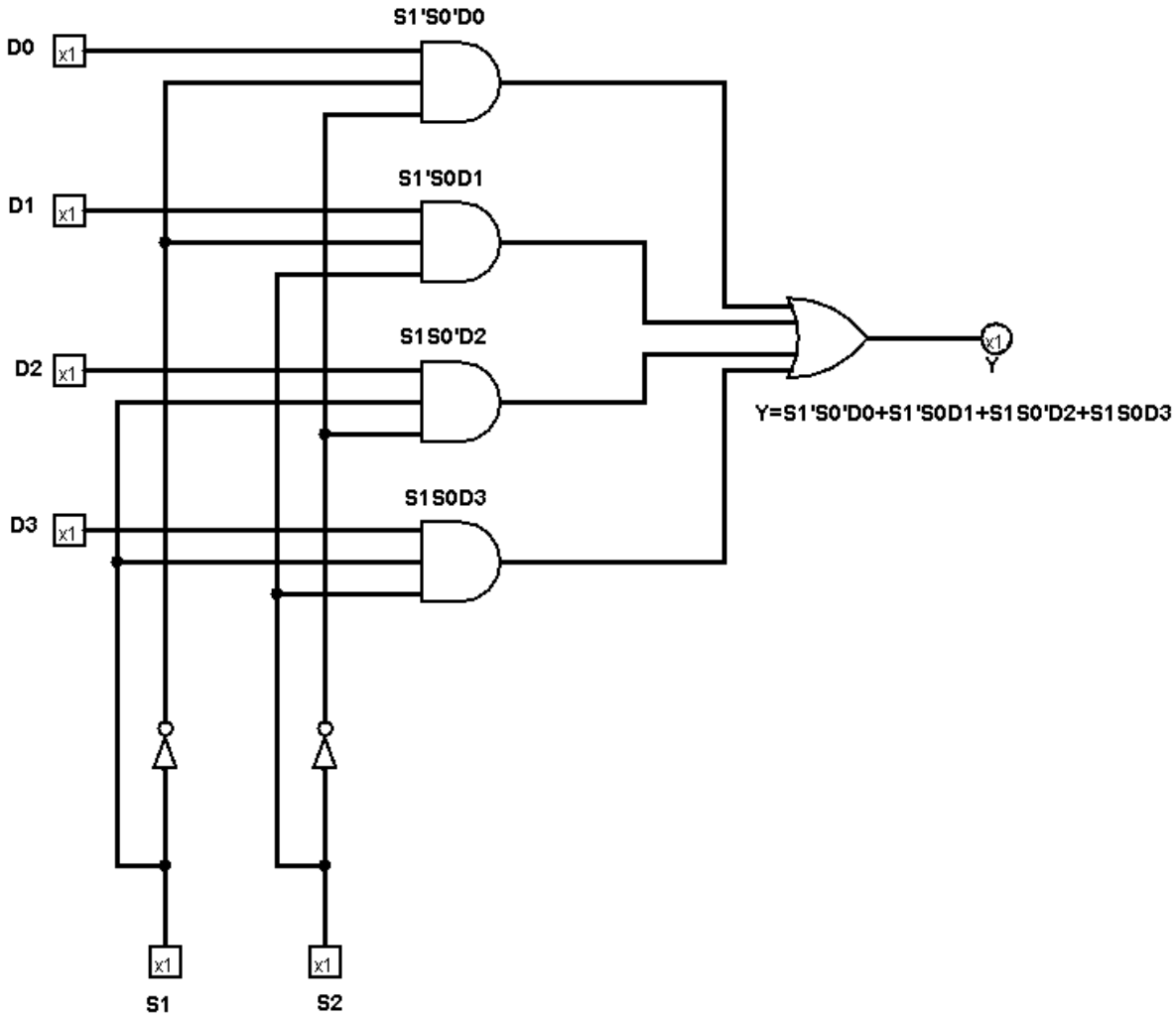

Name- Pratyush Kumar Singh Roll No. - 23 Sec - A Branch - CSE(IoT)

Block Diagram

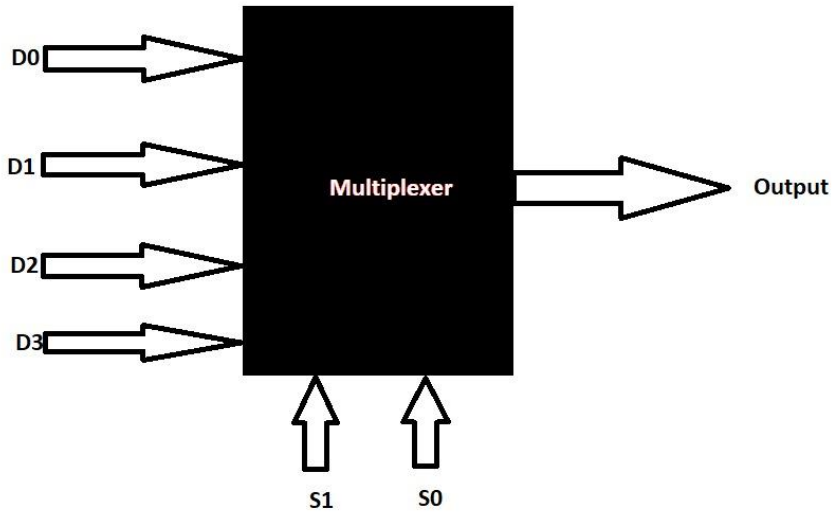

Circuit diagram

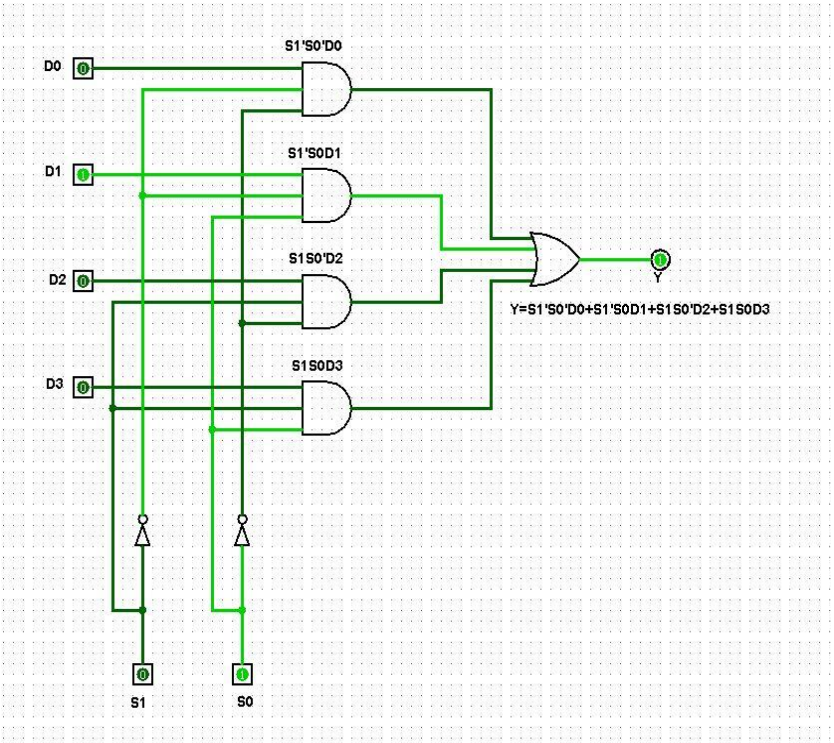

Truth Table

S_1	S_0	Y
0	0	D_0
0	1	D_1
1	0	D_2
1	1	D_3

Logical Expressions

Output $= Y = S_1' S_0' D_0 + S_1' S_0 D_1 + S_1 S_0' D_2 + S_1 S_0 D_3$

Discussions :

Multiplexer is a crucial combinational circuit which is used in various significant applications. Multiplexers can select data input lines as per our requirement. This is the reason multiplexers are often termed as “Data Selectors”. These find application in various realms of digital and as well as analogue electronics.