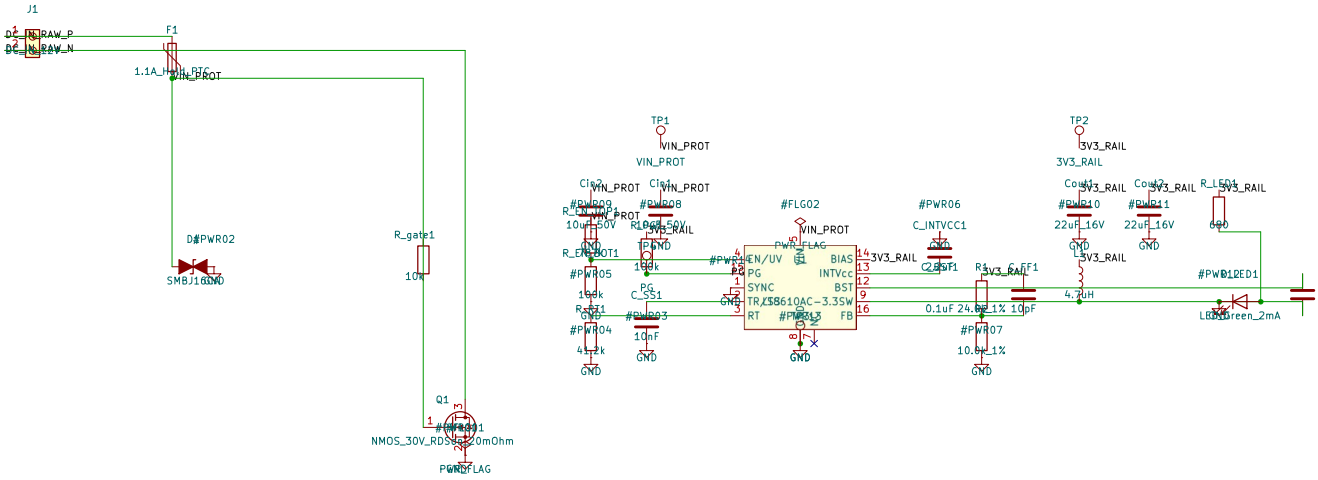
J1
F1
1.1A_Hold_PTC
VIN_PROT
D1
#PWR02
SMBJ16CA
R_gate1
10k
Q1
NMOS_30V_RDSon_20mOhm
PWR_FLAG
TP1
VIN_PROT
TP2
3V3_RAIL
#FLG02
#PWR06
C_INTVCC1
EN/UV
PG
SYNC
RT
BIAS
INTVcc
BST
FB
#PWR05
#PWR04
#PWR03
#PWR07
10.0k_1%
0.1uF
4.7uH
22uF_16V
GND