VLSI Course Project

Praveen V
Roll No: 2024102019
praveen.v@students.iiit.ac.in

International Institute of Information Technology, Hyderabad

***Abstract*—This project focuses on the design and implementation of a 5 bit-Carry Look Ahead (CLA) adder and its complete integration from schematic, layout to simulation and timing analysis.**

Contents

I Introduction **1**

II Proposed structure for the CLA **1**

III Design Details **1**

IV Timing Constraints of FF **2**

V Stick Diagrams **3**

VI Magic layout of building blocks **4**

VII Complete circuit integration on NG-Spice **5**

VIII Floorplan for Magic layout **6**

IX Complete circuit Magic layout **6**

X Reporting Delay and Max. frequency of CLA **7**

XI Verilog **7**

XII Vivado Fgpa **7**

XIII Acknowledgment **8**

XIV References **8**

I. Introduction

The 5-bit Carry Look-Ahead (CLA) adder is a digital circuit used to add two 5-bit binary numbers. It achieves faster operation compared to the ripple-carry adder because the carry bits are precomputed using the Propagate and Generate signals, which will be discussed in the next section.Also D-flip flops are used to make the circuit synchronous.

II. Proposed structure for the CLA

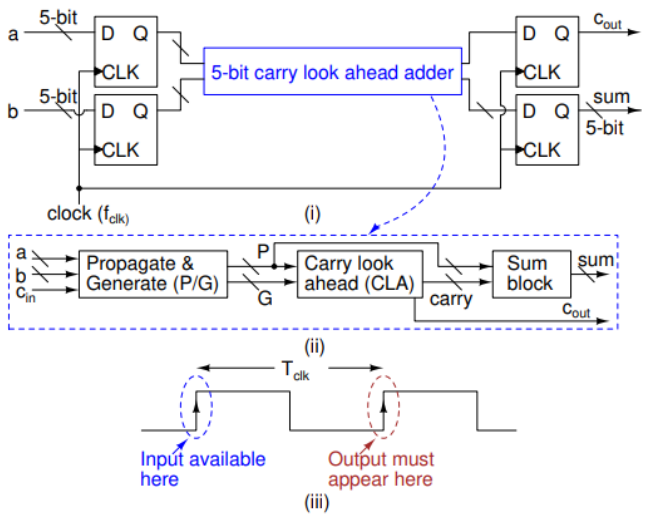

Fig. 1. Block diagram of the 5-bit Carry Look Ahead adder

In the proposed circuit, we observe that there are 16 D flip-flops in total: 10 flip-flops are used to register the two 5-bit input operands, while 5 flip-flops store the 5-bit sum output and 1 flip-flop stores the carry output. Examining the internal structure of the CLA, we see that it contains a Propagate/Generate (P/G) block, which precomputes the intermediate carry signals. For each bit position, the propagate and generate signals are defined as

$$P_i = a_i \oplus b_i \qquad G_i = a_i.b_i$$

The carry signal can be generated as follows:

$$C_{i+1} = G_i + (P_i \cdot C_i)$$

where C_i is the carry generated from the previous stage.

Using this formula we can recursively to precompute carry's:

$$C_1 = G_0, \tag{1}$$

$$C_2 = G_1 + P_1 G_0, \tag{2}$$

$$C_3 = G_2 + P_2 G_1 + P_2 P_1 G_0, \tag{3}$$

$$C_4 = G_3 + P_3 G_2 + P_3 P_2 G_1 + P_3 P_2 P_1 G_0, \tag{4}$$

$$C_{out} = G_4 + P_4 G_3 + P_4 P_3 G_2 + P_4 P_3 P_2 G_1 + P_4 P_3 P_2 P_1 G_0. \tag{5}$$

Here in this project we considered cin=0 therefore the above equations emerges.

We can observe from the above function that we require 5 input gates if we want to implement the equations as it is which would increase the delay of the circuit by a large amount so therefore we opt to something in between which will have a better delay and also reduces the complexity of the circuit.This is done by using Nand3 gates in addition with Nand2,Not and Or gates.The equations of these are given below:

$$C_1 = G_0 \tag{6}$$

$$C_2 = \overline{\overline{G_1} \cdot \overline{P_1 \cdot G_0}} \tag{7}$$

$$C_3 = \overline{\overline{G_2} \cdot \overline{P_2 G_1} \cdot \overline{P_2 P_1 G_0}} \tag{8}$$

$$C_4 = \overline{\overline{G_3} \cdot \overline{P_3 G_2}} + \overline{\overline{(P_3 P_2 G_1)} \cdot (\overline{P_3 P_2 P_1} + \overline{G_0})} \tag{9}$$

$$C_{out} = \overline{(\overline{\overline{G_4} \cdot \overline{P_4 G_3}} + \overline{\overline{(P_4 P_3 G_2)} \cdot (\overline{P_4 P_3 P_2} + \overline{G_1})}) \cdot (\overline{P_4 P_3 P_2} + \overline{P_1 G_0})} \tag{10}$$

In this implementation, NAND2 and NAND3 gates are used predominantly because they provide the most efficient CMOS realization of the carry logic. NAND gates are inherently faster than OR or NOR gates due to their stronger pull-down network and reduced delay, which is crucial in high-speed carry computation for a CLA. They also require fewer transistors, resulting in lower area, reduced parasitic capacitance, and improved power efficiency. Furthermore, the carry equations of the CLA naturally map well to NAND-based logic through De-Morgan's simplifications, minimizing the number of logic stages. Thus, using NAND2 and NAND3 gates enhances performance while keeping the design compact and power-efficient.

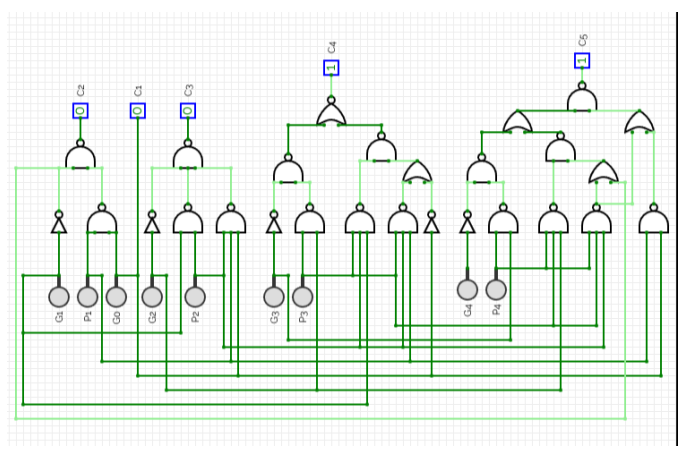

Fig. 2. circuit diagram of the 5-bit Carry Look Ahead adder

III. Design Details

Here we have used TSPC flip-flop instead of conventional flip-flop because they offer faster operation, reduced clock load, and lower power consumption due to their single-phase clocking and fewer transistors. These characteristics make

them well suited for high speed arithmetic circuits such as the CLA.

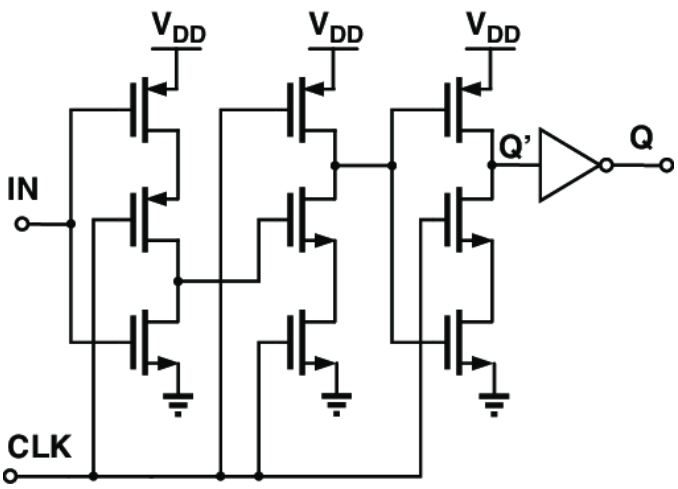

Fig. 3. Circuit diagram for positive edge triggered Tspc flip flop

TABLE I
GATE IMPLEMENTATION DETAILS

Gate Type	Implementation Method	W_n (μm)	W_p (μm)
D-Flip Flop	TSPC	10λ	10λ
NAND2	CMOS	10λ	10λ
NAND3	CMOS	10λ	10λ
OR	CMOS (using NOR + INV)	10λ	10λ
XOR	Pass transistor logic	10λ	10λ
Inverter	CMOS	10λ	10λ

Here, CMOS implementation is used for all the gates except the XOR gate, which is implemented using Compimentary Pass Transistor Logic (CPTL) due to its advantages such as reduced transistor count, lower power consumption, and smaller area when compared to a conventional CMOS XOR design.

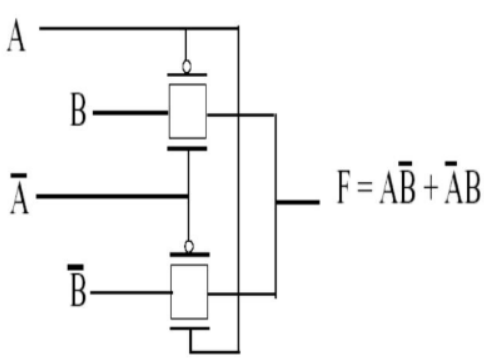

Fig. 4. mos level diagram for xor gate

IV. TIMING CONSTRAINTS OF FF

In this section we will look at the working of Tspc flip flop calculating it's setup time,hold time and it's clock to output time(T_{CQ}).

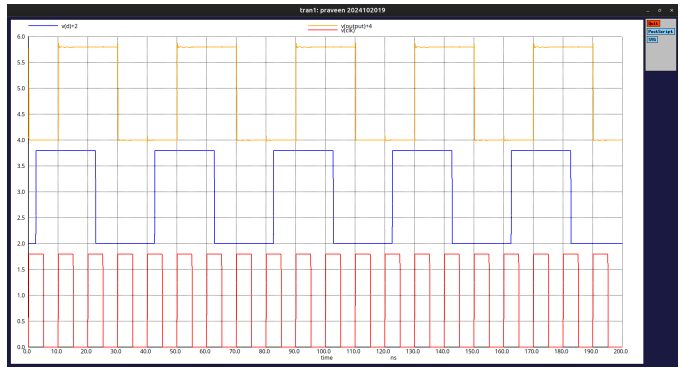

Fig. 5. timing diagram for Tspc flip flop

In the above diagram we can observe that the output is shooting up when clock shoots up high and holding on to that value till next positive clock edge.

Setup time is defined as the minimum time for which the data input must remain stable before the active clock edge for the flip-flop to successfully capture it.We calculate this here as the delay of the first stage of the flip flop.

Hold time is the minimum duration for which the data input must remain stable after the active clock edge to ensure proper sampling by the flip-flop.We calculate this as the delay of the second stage.

Clock-to-Q delay is the time taken for the output of the flip-flop (Q) to respond and settle to a valid logic level after the active clock edge triggers the device. It represents the internal propagation delay of the flip-flop and affects how quickly data can be passed to the next stage in a digital circuit. A smaller Tcq enables higher performance and faster sequential operation.

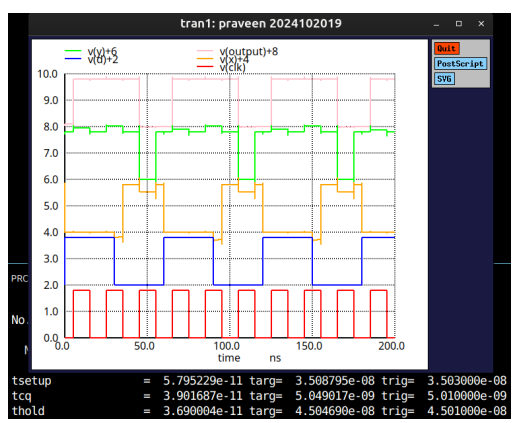

Timing Parameters
setup time = 57 ps
hold time = 36 ps
t_{CQ} = 39 ps

V. Stick Diagrams

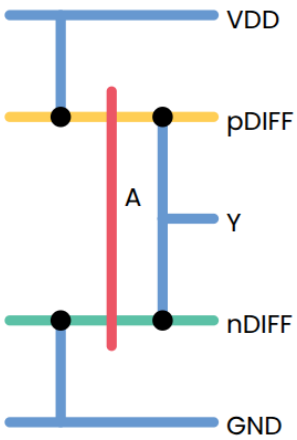

Fig. 7. stick diagram for inverter

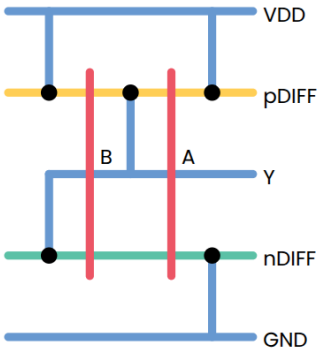

Fig. 8. stick diagram for nand gate

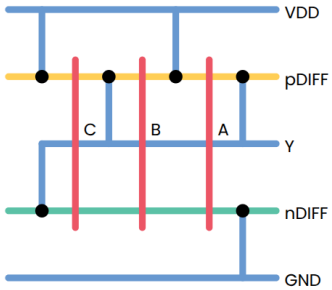

Fig. 9. stick diagram for nand3

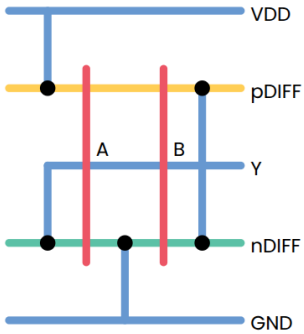

Fig. 10. stick digram for Nor

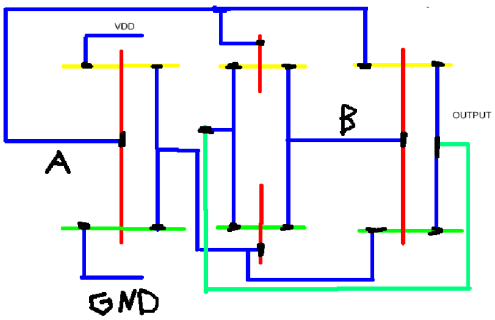

Fig. 11. stick diagram for Xor gate

VI. Magic layout of building blocks

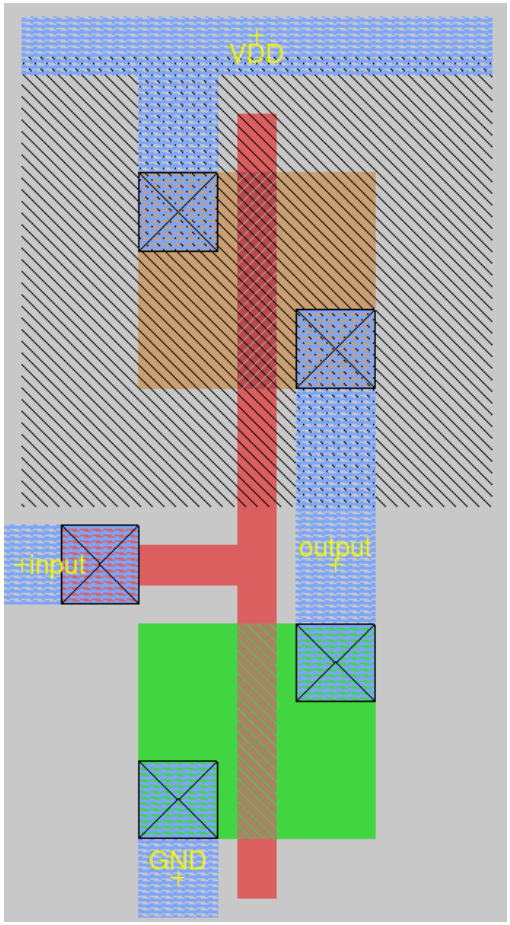

Fig. 12. Magic layout for 2 input not gate

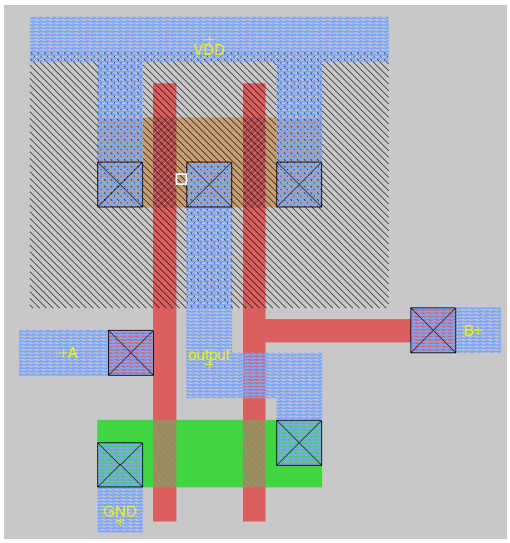

Fig. 13. Magic layout for 2 input nand gate

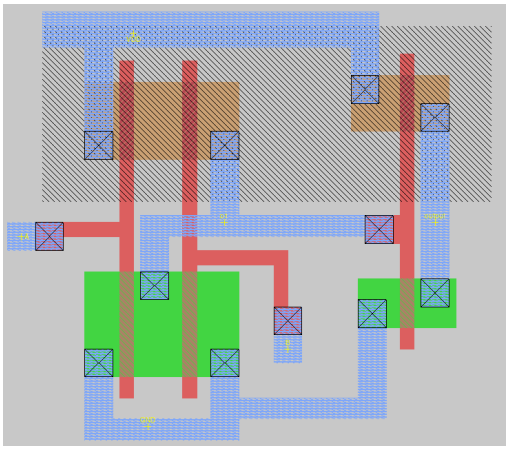

Fig. 14. Magic layout for 2 input or gate

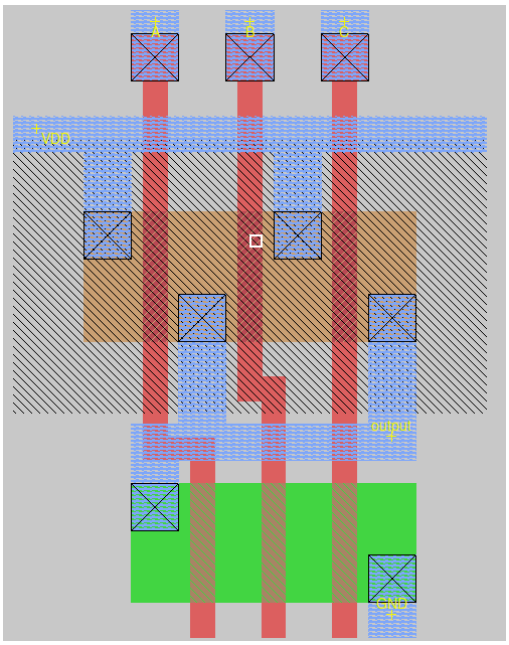

Fig. 15. Magic layout for 3 input nand gate

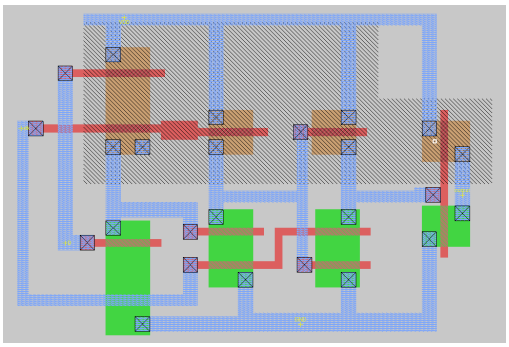

Fig. 16. Magic layout for Tspc flip flop

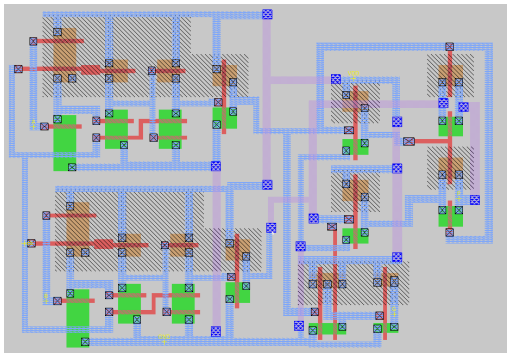

Fig. 17. Magic layout for P/G block with 2 D flip flop attached for inputs

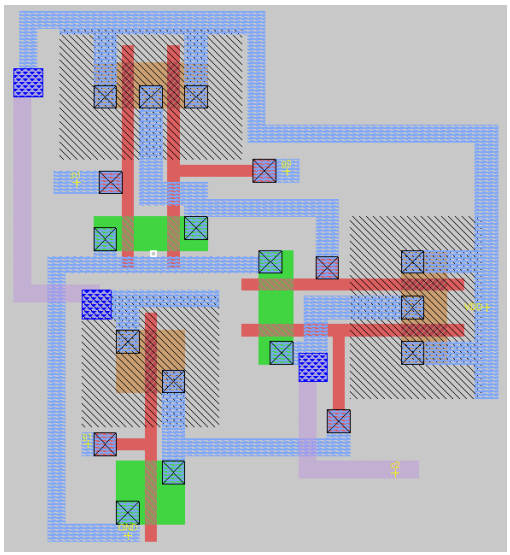

Fig. 18. Magic layout for Carry 2 block

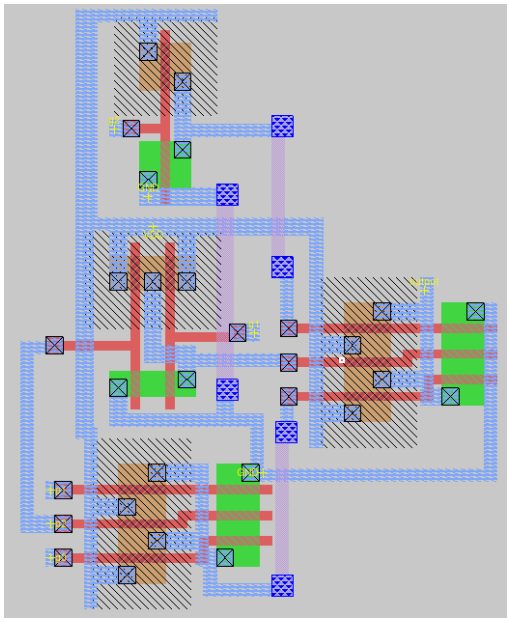

Fig. 19. Magic layout for Carry 3 block

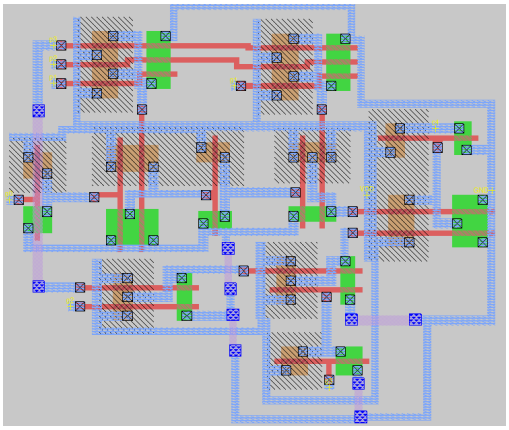

Fig. 20. Magic layout for Carry 4 block

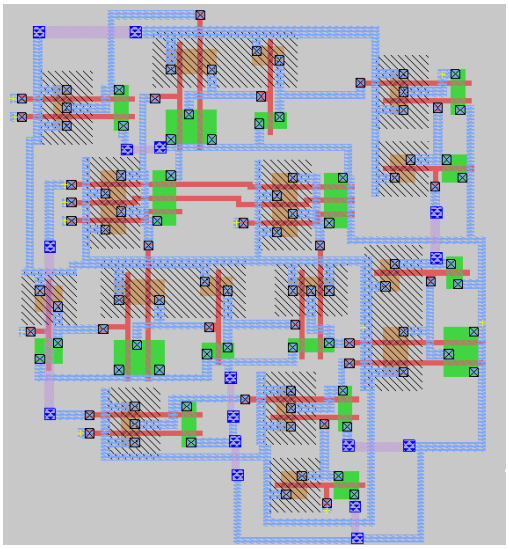

Fig. 21. Magic layout for Carry 5 block

VII. Complete circuit integration on NG-Spice

Now we test the working of our circuit using prelayout so that we can move forward with our post layout.

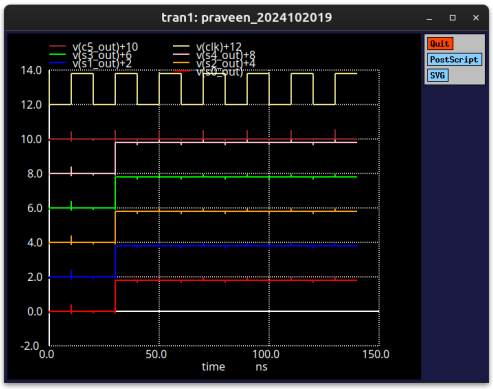

Fig. 22. waveform for prelayout

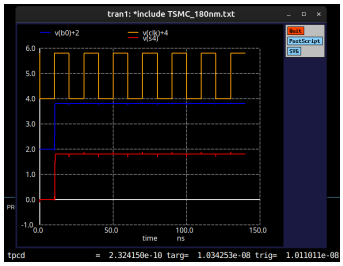

Fig. 23. delay measurements

For worst delay we find the longest path and find the time to go from 50% input to 50% output. Here that path is one of the input to S4.

Timing Parameter
t_{Pcd} = 234 ps
maximum clock speed = 1 GHz

VIII. Floorplan for Magic layout

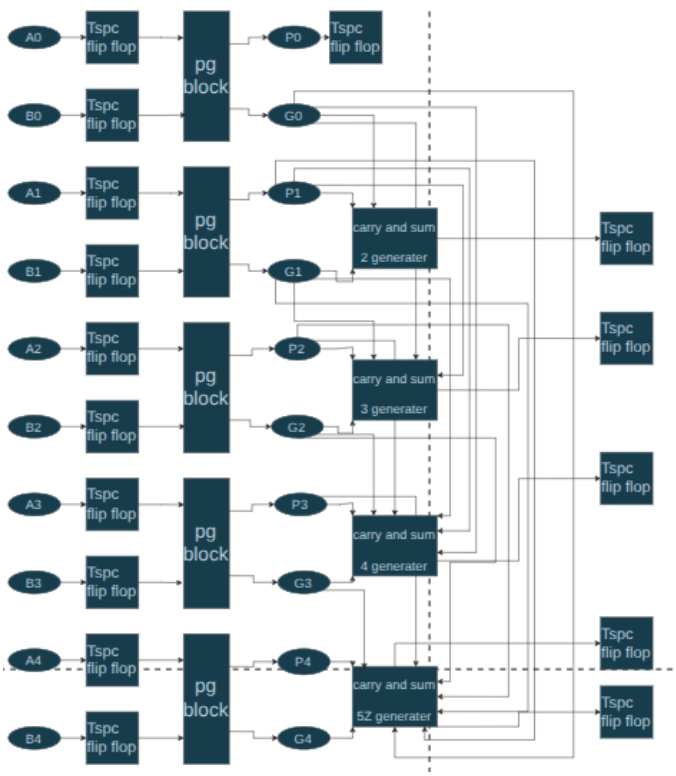

Fig. 24. Floor plan

The above is a overview of the magic layout to be implemented in the up comming section.Below we will list out the pitches of different blocks.(note: the carry and sum generater block in the above floor plan is combination of carry block and xor gate so to get the pitch of that just add the pitch of the individual components)

TABLE II
Pitch Details of Implemented Blocks

Structure	Hor. Pitch	Vertical Pitch
TSPC FF	129λ	87λ
P/G block with 2 flip flop	261λ	182λ
XOR gate	105λ	112λ
C2	85λ	93λ
C3	112λ	141λ
C4	206λ	117λ
C5	210λ	236λ

IX. Complete circuit Magic layout

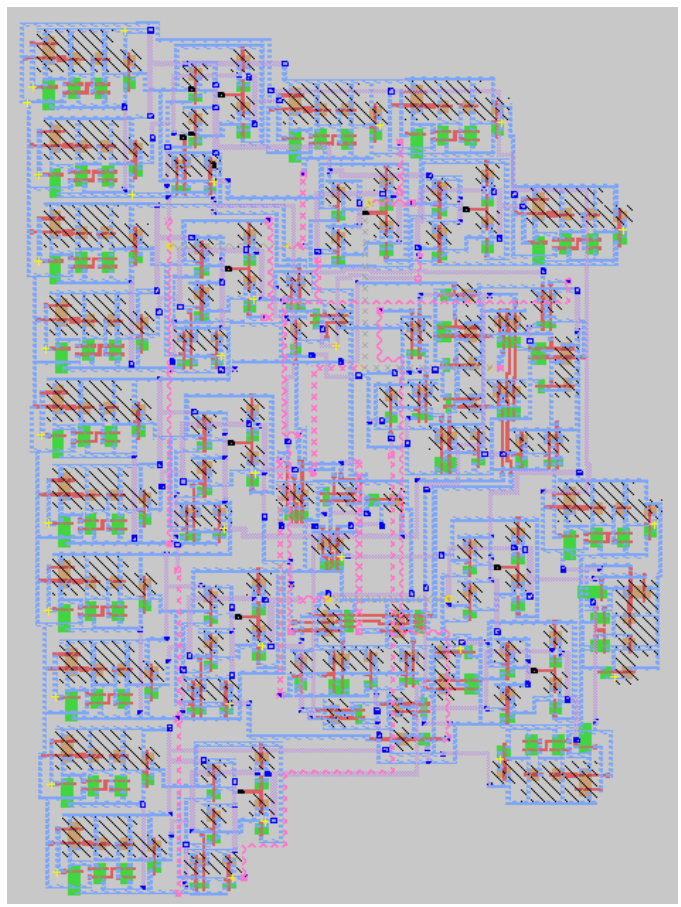

Fig. 25. Complete Cla's magic layout

The above is the complete magic layout which shows similar structure to that of the floor plan that was in previous section.

Dimension Details
Horizontal Pitch = 688λ
Vertical Pitch = 938λ

```
Va0 a0 gnd 0
Va1 a1 gnd 0
Va2 a2 gnd 0
Va3 a3 gnd 0
Va4 a4 gnd 0

Vb0 b0 gnd 1.8
Vb1 b1 gnd 1.8
Vb2 b2 gnd 1.8
Vb3 b3 gnd 1.8
Vb4 b4 gnd 1.8
```

Fig. 26. Input given for waveform

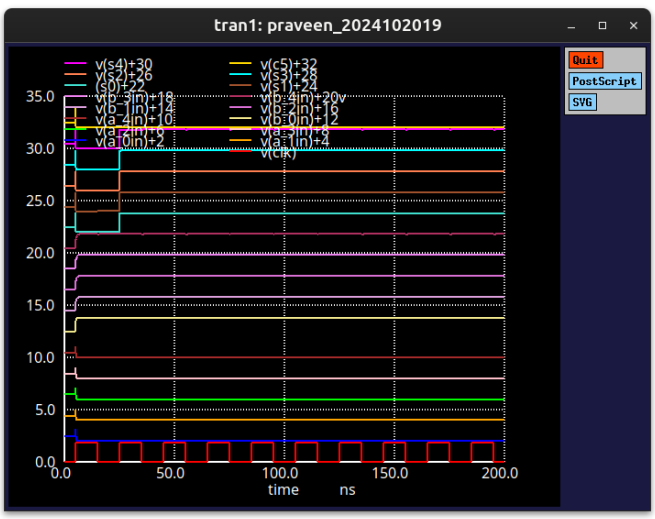

Fig. 27. post layout plots

In the above waveform (a/b)_xin x'th bit input which goes to it's value at first clock edge and the outputs are calculated at the 2nd clock edge.

TABLE III
PRE-LAYOUT VS POST-LAYOUT COMPARISON

Property	Pre-layout	Post-layout
Max. Freq. of operation	1 GHz	2.5 GHz
Max. t_{PD}	234 ps	70 ps

X. REPORTING DELAY AND MAX. FREQUENCY OF CLA

Here we find the maximum delay by analyzing the longest path and maximum frequency by reducing the time period untill we don't get a correct output.

$$f_{\max} = \mathbf{2.5\ GHz}$$

$$t_{PD,\max} = \mathbf{70\ ps}$$

XI. VERILOG

In this section we will check the correctness of our Cla in verilog.We implement the Cla in Verilog and give inputs as 20 and 25 to get the output as shown in the figure.

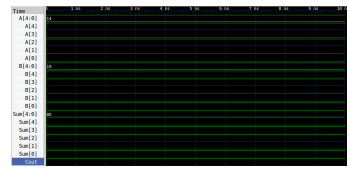

Fig. 28. Verilog waveform for Cla

XII. VIVADO FGPA

In this section, we will deploy our Verilog code onto the FPGA hardware and verify its operation through hands-on testing.

Here i am giving the input as 10000 + 10110.which produces a cout of 1 and sum as 00110.Here we use maximum rail voltage as 3.3v

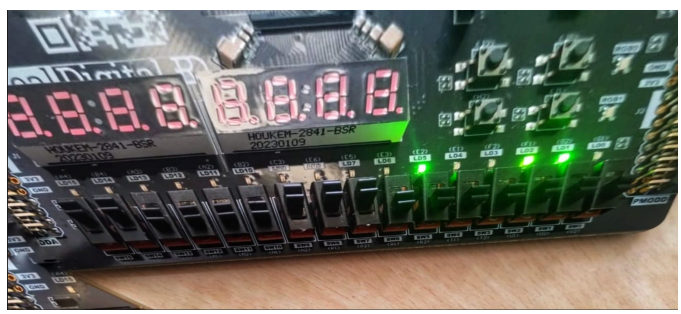

Fig. 29. zoomed in picture of output

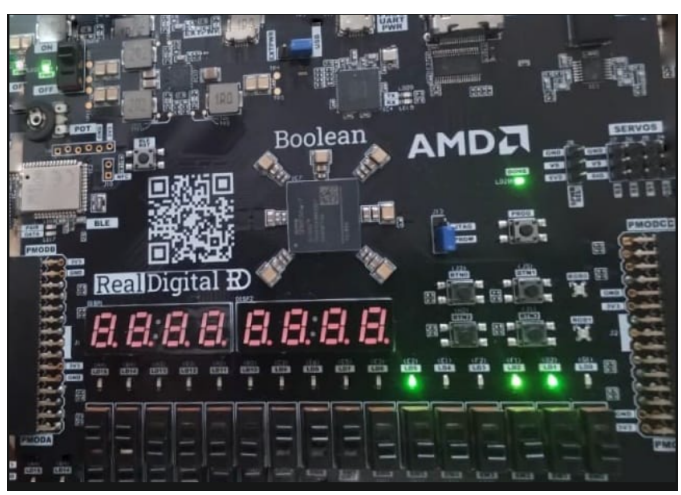

Fig. 30. board picture of output

XIII. Acknowledgment

First and foremost, I would like to express my sincere gratitude to Dr. Abhishek Shrivastava for his constant guidance, motivation, and support throughout the duration of this project. I am also thankful to the TAs for their timely assistance and clarity in resolving my queries, which greatly simplified the overall process. Lastly, I would like to acknowledge my friends and peers, whose thoughtful discussions and innovative ideas played a major role in the successful completion of this work.

XIV. References

1. Digital Logic and Computer Design by Morris Mano.
2. Computer Architecture and Organization by John P. Hayes.
3. CMOS VLSI Design (fourth edition) by Weste and Harris.
4. Fundamentals of Digital Logic with Verilog Design by Brown and Vranesic.