Design and Implementation of a Real-Time Snake Game Using Verilog and VGA Interface in FPGA

Batch - 8

Nivedh P - CB.EN.P2EBS25022
Praveenraj R S - CB.EN.P2EBS25024

Objectives

- To design finite state machines (FSMs) for game control and navigation.
- To implement real-time graphics rendering using hardware logic.
- To generate synchronization signals (HSYNC and VSYNC) and RGB outputs for a 640×480 display with a VGA interface.
- To implement snake movement, growth logic, and collision detection using synchronous digital design.
- To use counters, clock division, and timing control to achieve smooth gameplay.
- To demonstrate hardware-based interactive system design without software intervention.

Literature Survey

S.No.	Paper	Author	Link
1	FPGA Implementation of Snake Game Using Verilog HDL (2018)	N. Singhal and M. S Narula,	Link
2	FPGA Implementation of Snake Game Using Verilog HDL (2025)	Nishant Singla[1], Mandeep Singh Narula[2]	Link
3	Image Display using FPGA with BRAM and VGA Interface for Multimedia Applications (2023)	Dr. Navaneethan S, Dr. Srigitha S Nath	Link
4	Adaptive FPGA Implementation of VLSI Architecture for Visual Object Detection and Tracking (2025)	Yassir Raheem and Vijeta Yadav*	Link
5	Investigating FPGA Gaming Systems: Real-Time Tic-Tac-Toe with Custom RISC, VGA Output, and Hardware Counters (2025)	C Saravanakumar, Mohanakrishnanishnan E	Link

Methodology

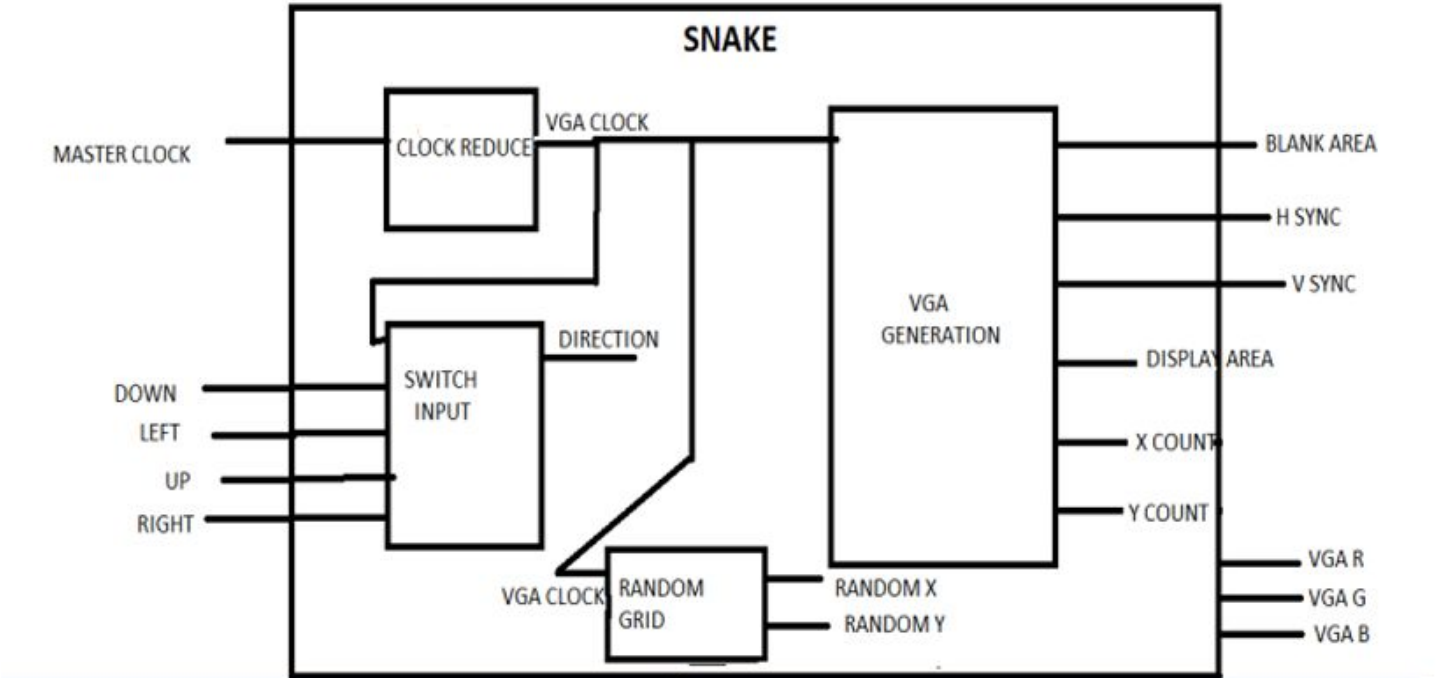

Image Courtesy: https://www.irjet.net/archives/V5/i5/IRJET-V5I5287.pdf

VGA Implementation

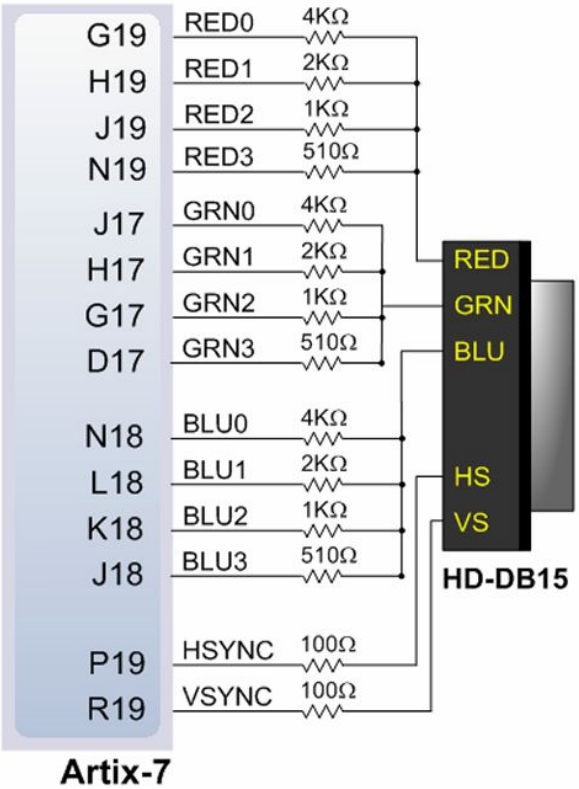

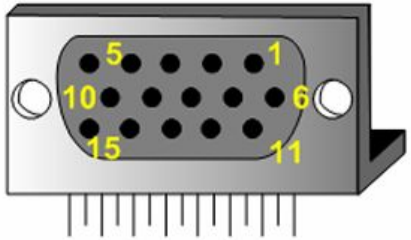

Pin 1: Red
Pin 2: Grn
Pin 3: Blue
Pin 13: HS
Pin 14: VS

Pin 5: GND
Pin 6: Red GND
Pin 7: Grn GND
Pin 8: Blu GND
Pin 10: Sync GND

Symbol	Parameter	Vertical Sync			Horiz. Sync	
		Time	Clocks	Lines	Time	Clks
T_S	Sync pulse	16.7ms	416,800	521	32 us	800
T_{disp}	Display time	15.36ms	384,000	480	25.6 us	640
T_{pw}	Pulse width	64 us	1,600	2	3.84 us	96
T_{fp}	Front porch	320 us	8,000	10	640 ns	16
T_{bp}	Back porch	928 us	23,200	29	1.92 us	48

Image Courtesy: https://digilent.com/reference/programmable-logic/basys-3/reference-manual

Vertical and Horizontal Counter

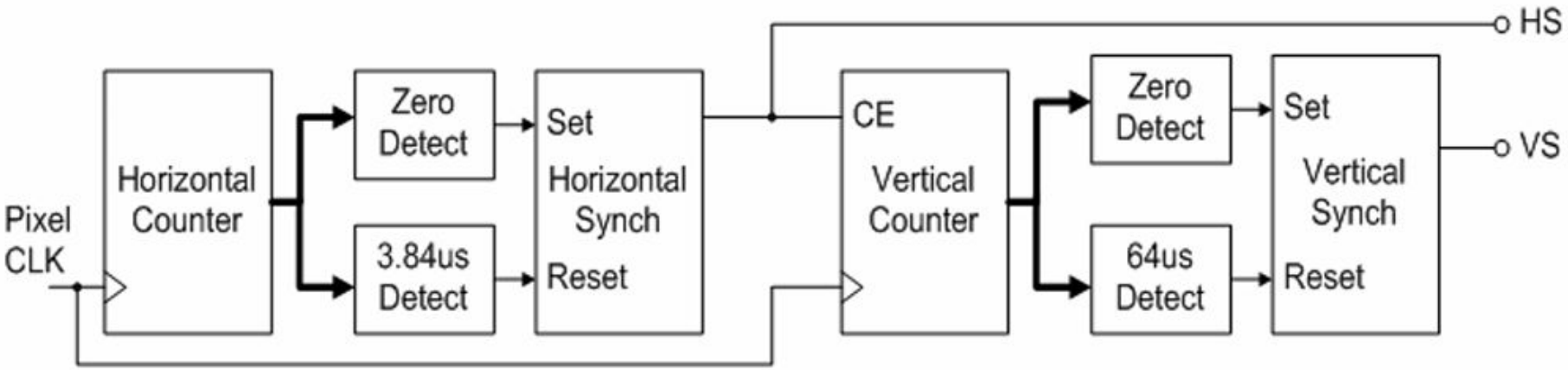

VGA Monitor Output

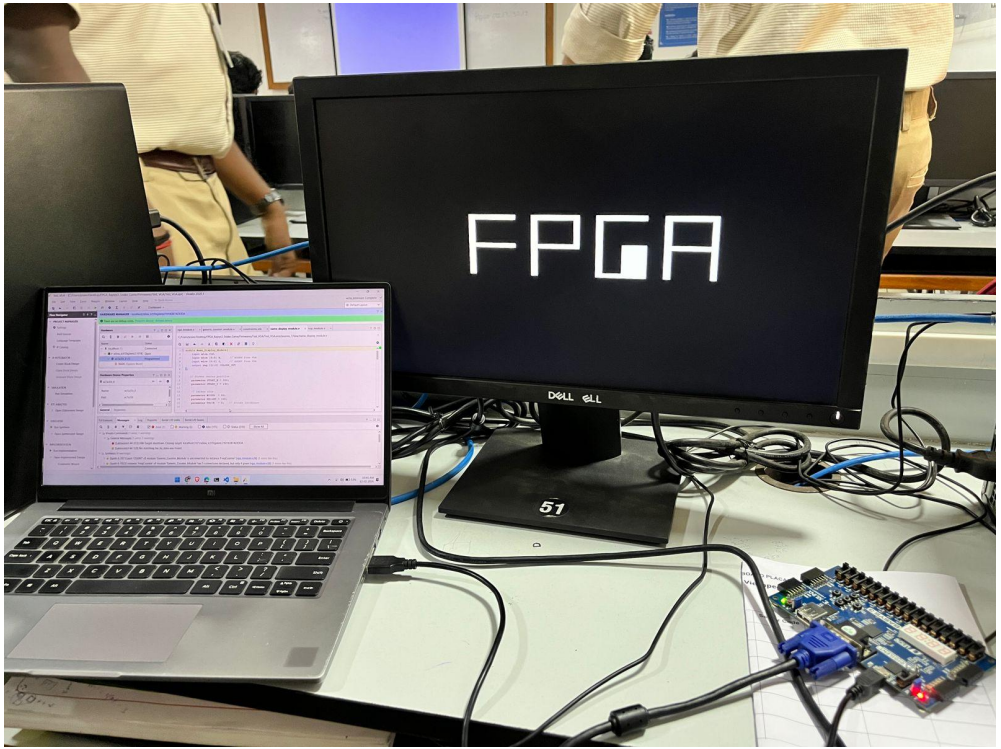

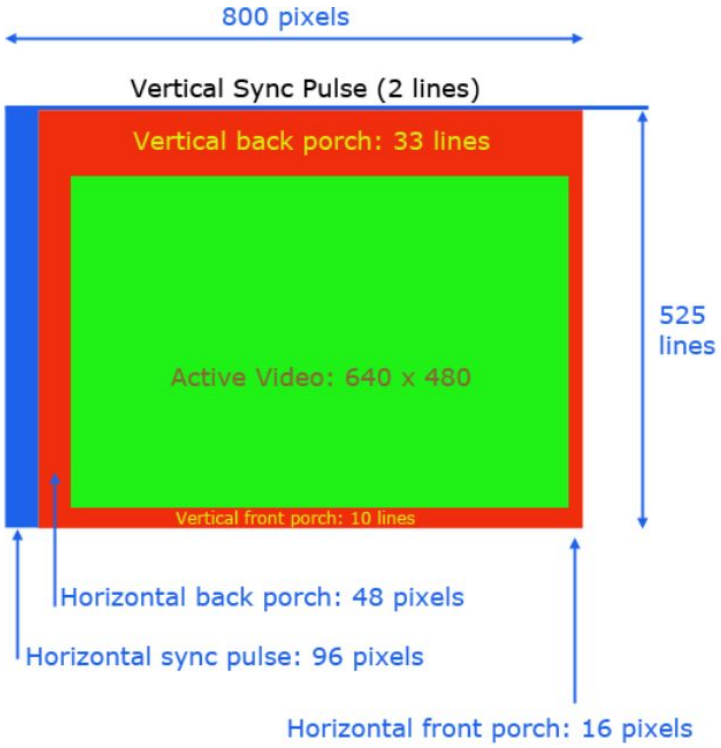

FSM for Snake Navigation

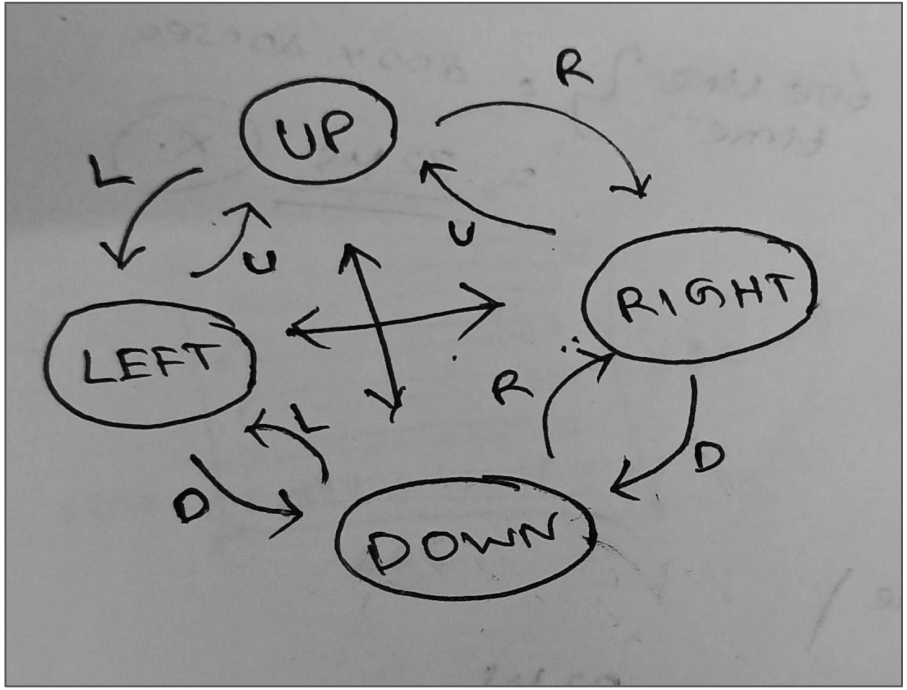

- Button inputs (BTNU, BTND, BTNL, BTNR) updated the Navigation State Machine immediately.
- The snake's head position is updated on every movement tick generated by the clock divider.
- Body-shifting logic (using register arrays) worked correctly frame-by-frame.

Target Food Generation (LFSR)

- LFSR (Linear Feedback Shift Register) is used to generate pseudo-random numbers in hardware.
- It works by shifting bits every clock cycle and inserting a new bit computed from selected tap positions.
- The feedback bit is generated using XOR/XNOR of specific register bits (taps).
- Two LFSRs can be used:
    - One for horizontal position (X coordinate).
    - One for vertical position (Y coordinate).

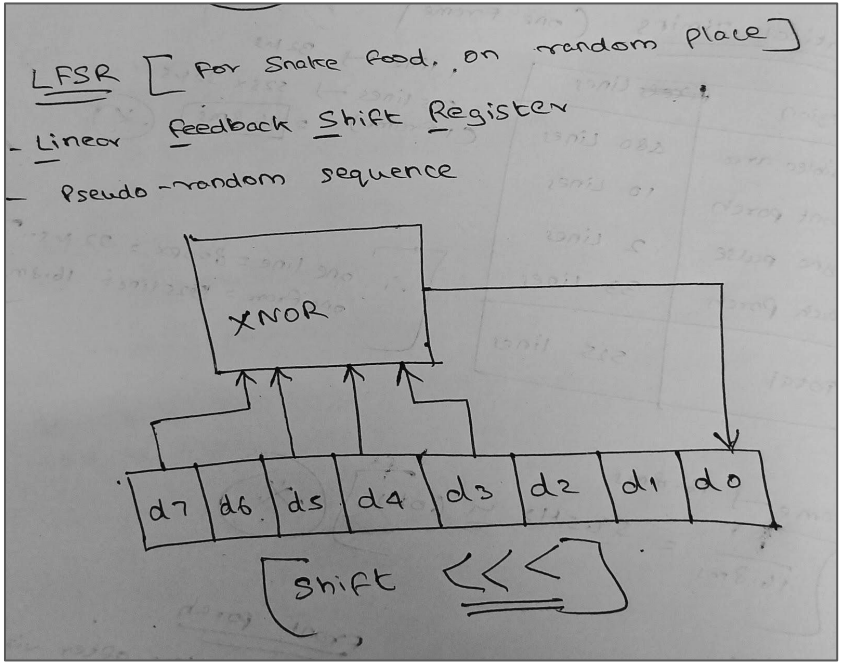

Thank You