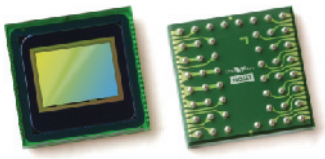

OV3660 3-megapixel product brief

www.ifc.cc

lead free

available in a lead-free package

1/5-Inch 3-Megapixel CMOS Image Sensor Based on OmniBSI™ Technology Delivers Best-in-Class Sensitivity and 720p HD Video for Entry Level Smart Phones

The OV3660 is OmniVision's first 3-megapixel CMOS image sensor based on its OmniBSI™ pixel architecture. Extending the company's portfolio of BSI sensors, the 1.4-micron OmniBSI pixel architecture enables the OV3660 to offer high performance imaging and 720p high-definition (HD) video in an ultra-compact 1/5-inch optical format, making it an ideal choice for entry-level and mainstream smart phones. Because the OV3660 fits into an industry-standard 6.5 x 6.5 mm module it offers a quick and easy upgrade from existing 2-megapixel camera designs.

The OV3660 supports 720p HD video recording at 30 frames per second (fps) with cropping and scaling, as well as 4:3 still image capture, allowing users to capture and share both HD video and photography. For still images, the sensor outputs JPEG compressed images that are ready-to-use, allowing the OV3660 to be integrated into a broad selection of platforms. The sensor also supports Scalado™ SpeedTags for faster image rendering that improves user experience for the preview and zoom modes.

The OV3660 offers automatic image control functions including exposure control, white balance, auto 50/60 Hz flicker detection, and black level calibration. Additional features include color saturation, hue, gamma, sharpness (edge enhancement), lens correction, defective pixel and noise cancellation. Camera controls are accessed over a standard serial camera control bus interface and RAW or YUV video data is output through a parallel output interface.

Find out more at www.ovt.com.

OmniVision.

OV3660

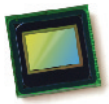

Applications

- Cellular Phones
- Toys
- PC Multimedia
- Digital Still Cameras

Ordering Information

- **OV3660-A51A**
  (color, lead-free, 51-pin CSP3)
- **OV3660-G04A**
  (color, chip probing, 200 µm backgrinding, reconstructed wafer)

Product Features

- 1.4 µm x 1.4 µm pixel with OmniBSI technology for high performance (high sensitivity, low crosstalk, low noise, improved quantum efficiency)
- optical size of 1/5"
- automatic image control functions:
  - automatic exposure control (AEC)
  - automatic white balance (AWB)
  - automatic flicker detection
  - automatic black level calibration (ABLC)
- programmable controls for frame rate, AEC/AGC 16-zone size/position/weight control, mirror and flip, cropping, windowing, and panning
- image quality controls: color saturation, hue, gamma, sharpness (edge enhancement), lens correction, defective pixel canceling, and noise canceling
- support for output formats: raw RGB data, RGB565/555/444, CCIR656, YCbCr422, and compression
- support for LED and flash strobe mode
- support for horizontal and vertical sub-sampling, binning
- support for 2x2 binning with binning filter to minimize binning artifacts
- support for data compression output
- standard serial SCCB interface
- digital video port (DVP) parallel output interface
- embedded 1.5 V regulator for core power
- programmable I/O drive capability, I/O tri-state configurability
- support for black sun cancellation
- support for images sizes: 3 megapixel, and any arbitrary size scaling down from 3 megapixel
- embedded microcontroller
- suitable for module size of 6.5 x 6.5 x <6mm

Product Specifications

- **active array size:** 2048 x 1536
- **power supply:**
  - **core:** 1.5 V ±5% (with embedded 1.5 V regulator)
  - **analog:** 2.6 - 3.0 V (2.8 V typical)
  - **I/O:** 1.8 V/ 2.8 V (1.8 V recommended)
- **power requirements:**
  - **active:** 98 mA
  - **standby:** 20 µA
- **temperature range:**
  - **operating:** -20°C to 70°C junction temperature
  - **stable image:** 0°C to 50°C junction temperature
- **output formats:** 8/10-bit RAW, RGB and YCbCr output, compression
- **lens size:** 1/5"
- **lens chief ray angle:** 27.6°
- **input clock frequency:** 6 - 27 MHz
- **max S/N ratio:** 34 dB
- **dynamic range:** 70 dB @ 8x gain
- **maximum image transfer rate:**
  - **2048x1536:** 15 fps
  - **1080p:** 20 fps
  - **720p:** 45 fps
  - **XGA (1024x768):** 45 fps
  - **VGA (640x480):** 60 fps
  - **QVGA (320x240):** 120 fps
- **sensitivity:** 670 mV/lux-sec
- **shutter:** rolling shutter
- **maximum exposure interval:** 1560 x t_{ROW}
- **pixel size:** 1.4 µm x 1.4 µm
- **image area:** 2912 µm x 2167.2 µm
- **package/die dimensions:**
  - **CSP3:** 5010 µm x 4960 µm
  - **COB:** 5000 µm x 4950 µm

Functional Block Diagram

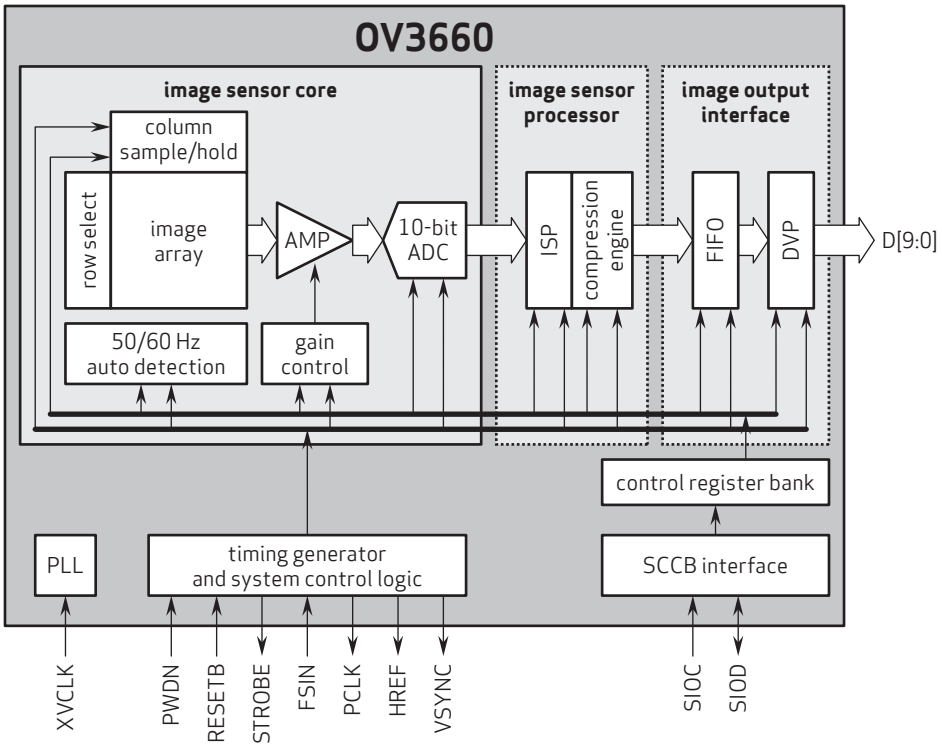

4275 Burton Drive
Santa Clara, CA 95054
USA

Tel: + 1 408 567 3000
Fax: + 1 408 567 3001
www.ovt.com

OmniVision reserves the right to make changes to their products or to discontinue any product or service without further notice. OmniVision, the OmniVision logo and OmniPixel are registered trademarks of OmniVision Technologies, Inc. OmniBSI is a trademark of OmniVision Technologies, Inc. All other trademarks are the property of their respective owners.

Version 1.2, February, 2011