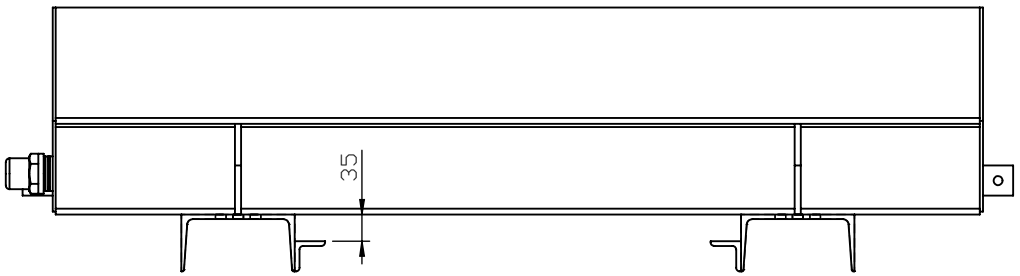

LV SIDE

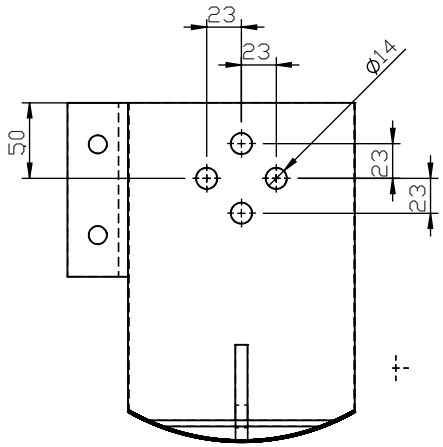

DETAIL AF
SCALE 1 : 5

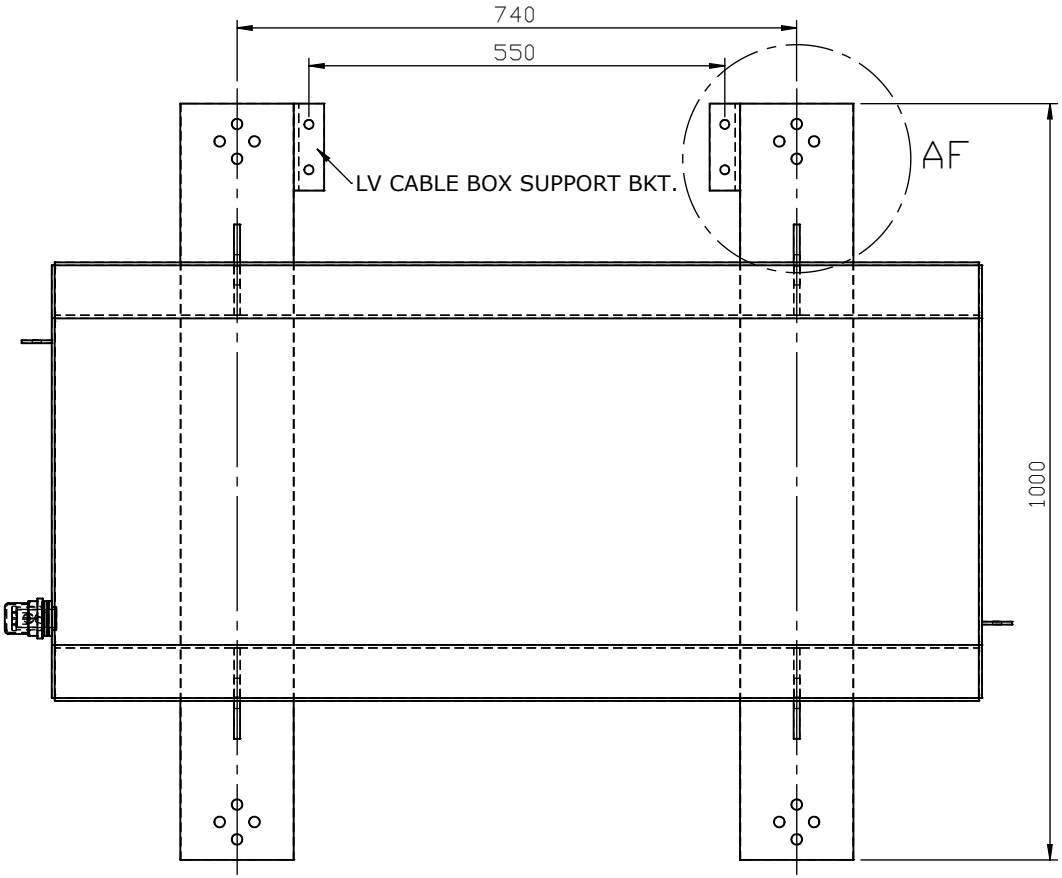

HV SIDE

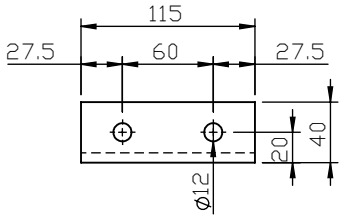

LV CABLE BOX SUPPORT BKT.
40X40X6 L / 2 NOS

GENERAL TOLERANCES UNLESS OTHERWISE SPECIFIED

HOLE SIZE ±0.05 / HOLE C-C ±0.05 / OTHER LINIER DIMENSIONS ±1

REVISION NO.	DATE	DRAWN	DESCRIPTION	APPROVED BY

LTL Transformers (Pvt) Ltd

154/11, Railway Station Road, Angulana, Moratuwa, Sri lanka

PROJECT: APS TANZANIA LIMITED

TITLE : **TANK ARRANGEMENT-INDOOR**

800kVA 11V/400V AL TRANSFORMER

DESIGNED BY:	SCALE: 1:16	UNITS: mm	SIZE: A4
REVIEWED BY:	DRAWN BY: PRASHANTH	DESIGN NO: CT-2314	
APPROVED BY:	DRAWING NO: DRW/CT-2314/11-6		
	DATE: 2023-07-06	REV:00	

D:\LAKDHANAVI LIMITED\LTL TRANSFORMERS DRAWINGS IN LTL-DB - DRAWINGS IN LTL-DB\CONTRACTS 2008 -2016\CT2023\CT-2314 800 11 400 AL APS TANZANIA LIMITED\MODEL-1\