Electronics

UIV

Spring 2026

Name: .....

Teacher: .....

LESSON 1

ELECTRONICS

Electronics is controlling the movement of _____ in _____ to make them do work for us.

To make circuits, we use electronic **components**, conducting **wires**, and a **power supply**, e.g. batteries.

We learn how to _____ circuits in **circuit diagrams.**

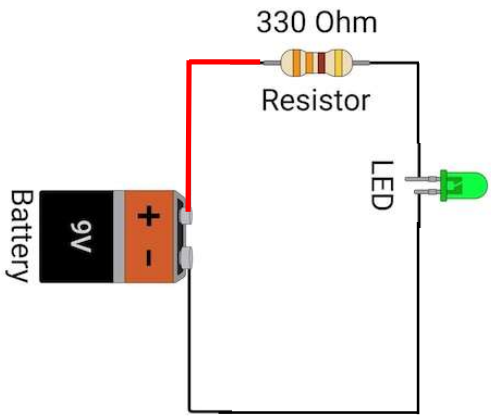

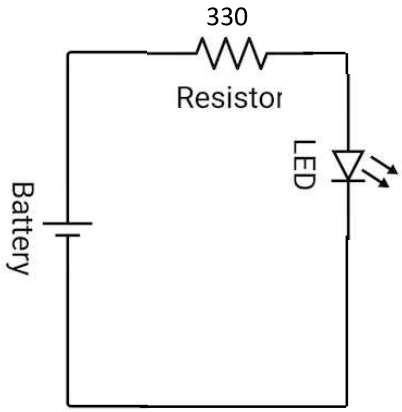

Everything starts from a power source, such as a battery, and this provides a voltage (V).

In a circuit, the positive terminal of a battery measures a higher voltage than the negative terminal.

The negative terminal should measure OV.

Voltage means that **there is energy available** (_____) for current to flow in the circuit.

Voltage **acts** as a push force which electrons use to move through a conductor such as a _____.

The difference in _____ at the battery terminals is the **potential difference** across the circuit.

With a higher voltage, more current flows.

Atoms lined up neatly in a conductor, for example, a copper wire

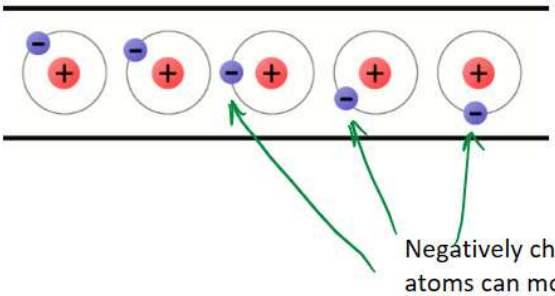

Negatively charged electrons on the outside of the atoms can move from one atom to another, creating the flow of charge we call electricity.

LEDs

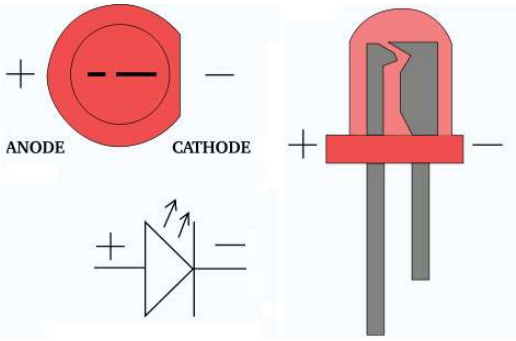

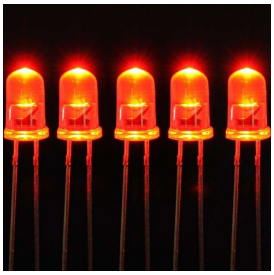

_____ _____ _____ (LEDs)

Diodes are components that only let current flow _____ _____ .

That is why they are draw with an arrowhead:

Current can only flow through this diode left to right.

LEDs are a special sort of diode which _____ light, hence the addition of two arrows to indicate light being emitted from the LED.

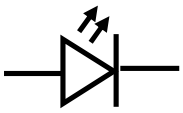

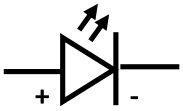

You can show polarity in circuit diagrams using + or — symbols.

When inspecting an LED by eye, look for the **flat edge** and **short leg**. These indicate the **negative, cathode** side.

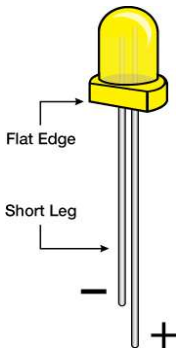

Chemistry link:

LEDs (Light Emitting Diodes) light up due to a process called **electroluminescence**, which happens when an electric current passes through a semiconductor material.

Examples of semiconductor materials used in LEDs are gallium, phosphorus and Arsenic.

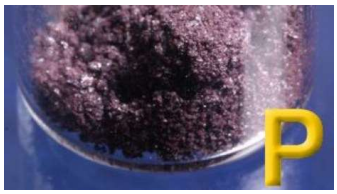

Blue LEDs

Blue LEDs use **gallium nitride (GaN)** as the semiconductor material. It took years to discover this!

Physics link:

Red and green LEDs existed for years, but no one could work out how to make blue.

It was impossible to create **white light** using LEDs, without blue.

Combining red, green, and blue (RGB) made it possible to build **full-colour displays** and **white LED lighting**.

In **2014**, the inventors of the blue LED—**Isamu Akasaki, Hiroshi Amano, and Shuji Nakamura**—were awarded the **Nobel Prize in Physics** for their work.

Batteries

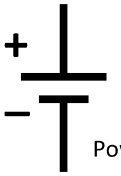

Power supply symbol

Several cells can be added together where more power is required.

Common batteries

Resistors

Resistance is measured in _____, symbol _____.

Resistors control the _____ _____, which in turn controls the _____.

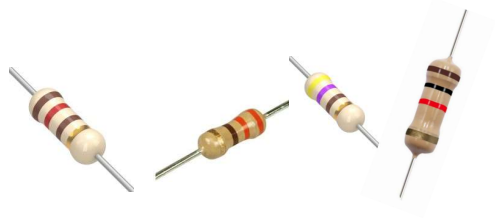

Resistor symbols

LEDs have a set **working voltage.**

If the working voltage is exceeded, a LED can be damaged.

We use resistors to control this.

Test meters

If you don't know the value of a resistor, you can use a **test meter**.

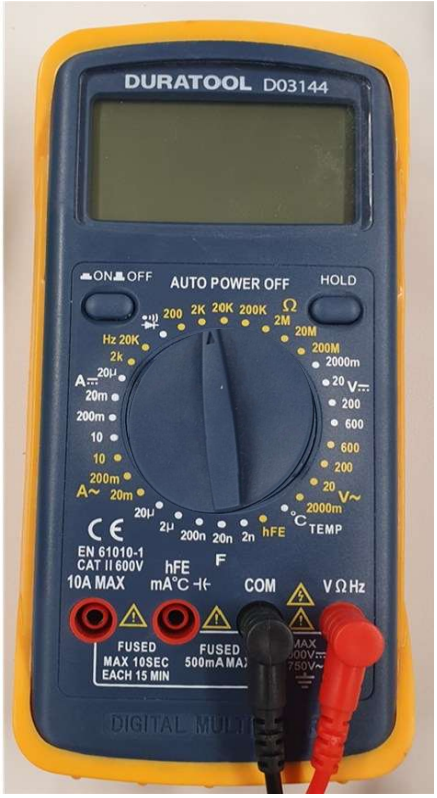

Instructions:

1. Check the multimeter is turned on.
2. Turn the dial to 2K on the resistance scale—look for the Ohm symbol **Ω**.
3. Touch the probes to each end of a resistor. Write the value you see in the table below

Colours on the resistor bands	**Test meter value**

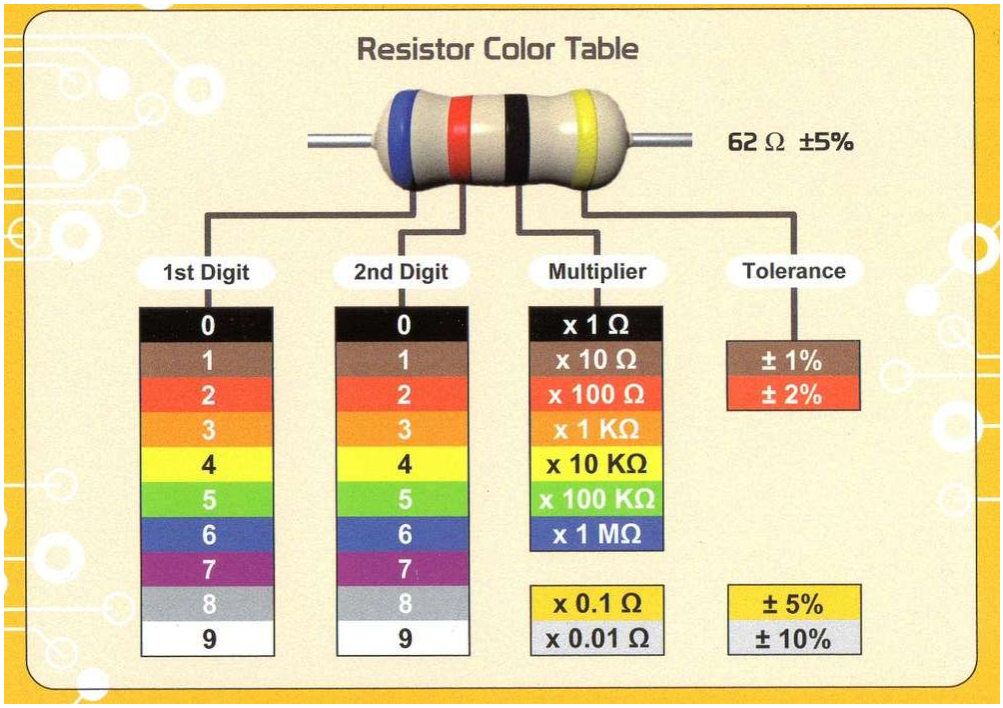

Deducing resistor values from colour bands

Example 1: 10k Ohm Resistor Color Code
Band 1 (Brown): First digit is 1.
Band 2 (Black): Second digit is 0.
Band 3 (Orange): Multiplier is ×1,000 (3 zeros). So, 10 followed by 3 zeros is 10,000 Ω.
Band 4 (Gold): Tolerance is ±5%.
Therefore, a **Brown, Black, Orange, Gold** resistor is a 10kΩ resistor with a 5% tolerance.

Example 2: 220 Ohm Resistor Color Code
Band 1 (Red): First digit is 2.
Band 2 (Red): Second digit is 2.
Band 3 (Brown): Multiplier is ×10 (1 zero). So, 22 followed by 1 zero is 220 Ω.
Band 4 (Gold): Tolerance is ±5%.
So, a **Red, Red, Brown, Gold** resistor is a 220Ω resistor with a 5% tolerance.

Exercise: write the value of the following resistors:

	Value	Tolerance range
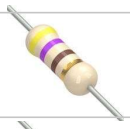 Yellow, purple, brown, gold		
Orange, orange, brown, gold		
Brown, black, red, gold		

>This circuit requires a

_____

to ensure the working voltage of the LED. Is not exceeded.

>Draw your answer into the circuit

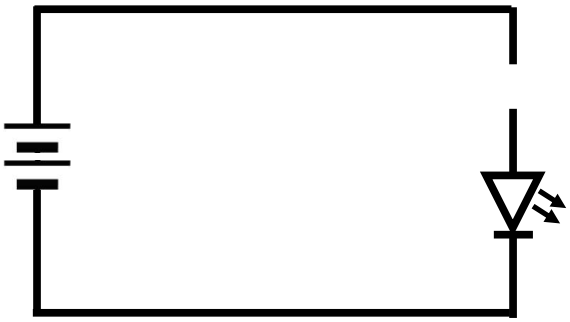

Switches

Momentary (push to make, button) switch

When you push down, the gap between the two contacts is bridged.

When you let go, the gap appears as the bridge is lifted again

Latching (rocker) switch

When you push down, the gap between the two contacts is bridged.

When you let go, the switch stays in the position you pushed it into.

Circuits with switches

Draw power cells on the left hand side.

Components between the top **positive** ‘rail’ and the bottom ‘**negative**’ rail

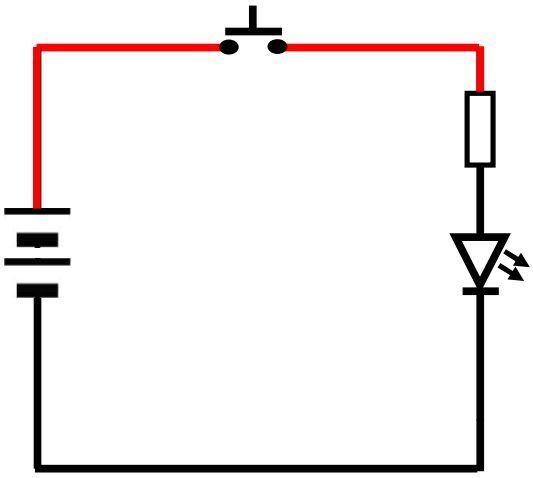

Component symbols

Draw the correct symbols in the table below. You will need to learn these component symbols.

Pay attention to the shapes each symbol is made of.

Battery (power cell) *Make sure the signs are on the right ends of the symbol*		A battery is a store of energy. It provides the voltage that makes current flow in a circuit." When a circuit is connected, current flows, transferring the stored energy to the components like LEDs
Resistor *Make sure you indicate the value of the resistor if known*	or	A resistor limits the current in a circuit so that components like LEDs are not damaged
LED (light emitting diode) *Make sure the diode is pointing the right way (+ve towards –ve)*		A diode only allows current to flow in one direction: from the positive side to the negative side. LEDs are diodes with electroluminescent chemicals which emit light when current flows through them
Switch (Momentary) (Push to make)		A momentary switch only closes the circuit while it is being pressed. When you let go, the circuit opens again. Typical uses are in doorbells, game controllers and keyboards.
Switch (Latching) (Rocker)		A rocker switch toggles between ON and OFF positions. It stays in whichever position you set it until you press it again Typical uses are in power switches and lamps and desk lights.

Prototyping

When you make circuits, it is good to plan them out first and test them to check they work.

Electronics engineers plan and test circuits on breadboards, which have rows of metal grips in them.

Wires and components can be inserted into the breadboard holes.

In the diagrams, dots are joined together where there is a connection.

Electricity flows through connected rows and rails.

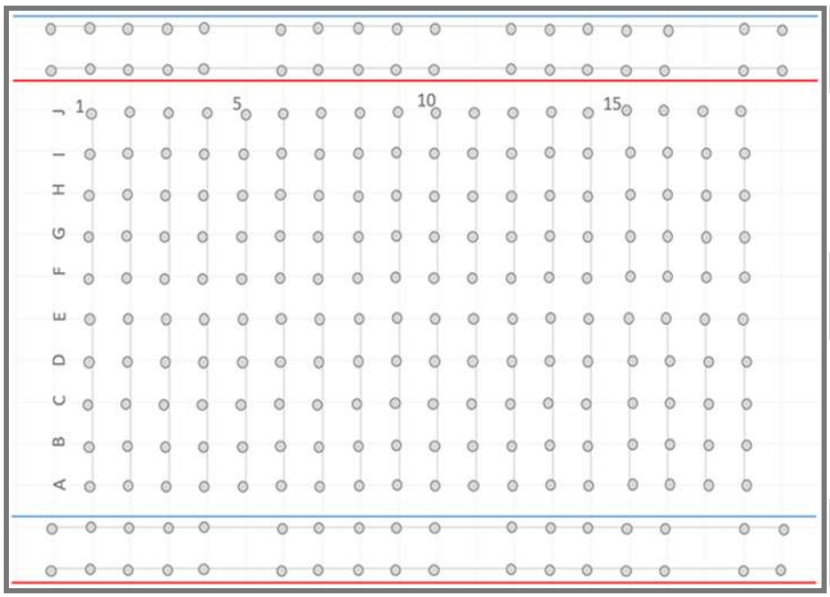

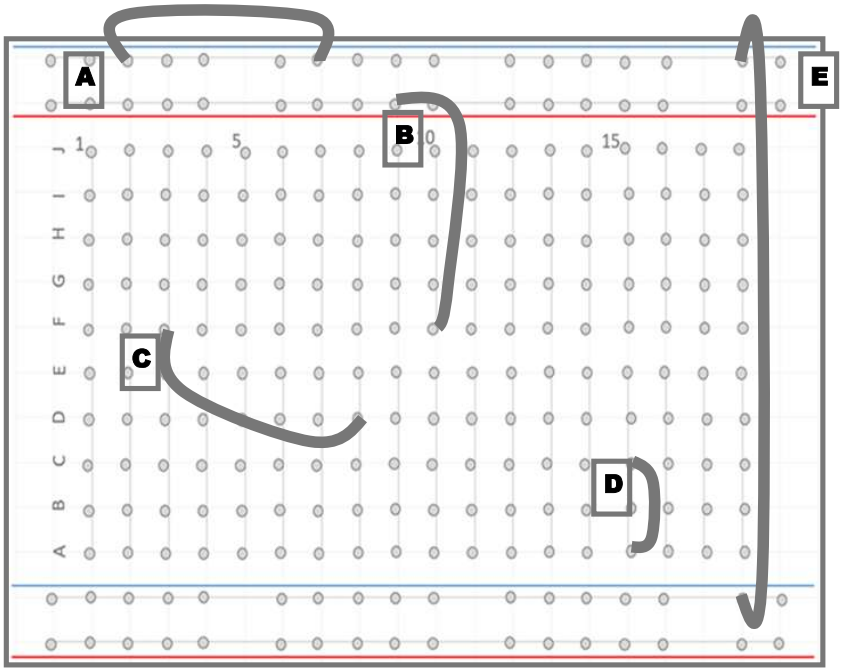

Put a cross against each letter to indicate whether the connection could be useful or is useless.

	Could be useful	Useless
A		
B		
C		
D		
E		

Draw the circuit:

Use the correct symbols when drawing circuits.

Look at the circuit diagram below and then map it on to the breadboard, drawing the components in positions that would make the circuit shown in the circuit diagram.

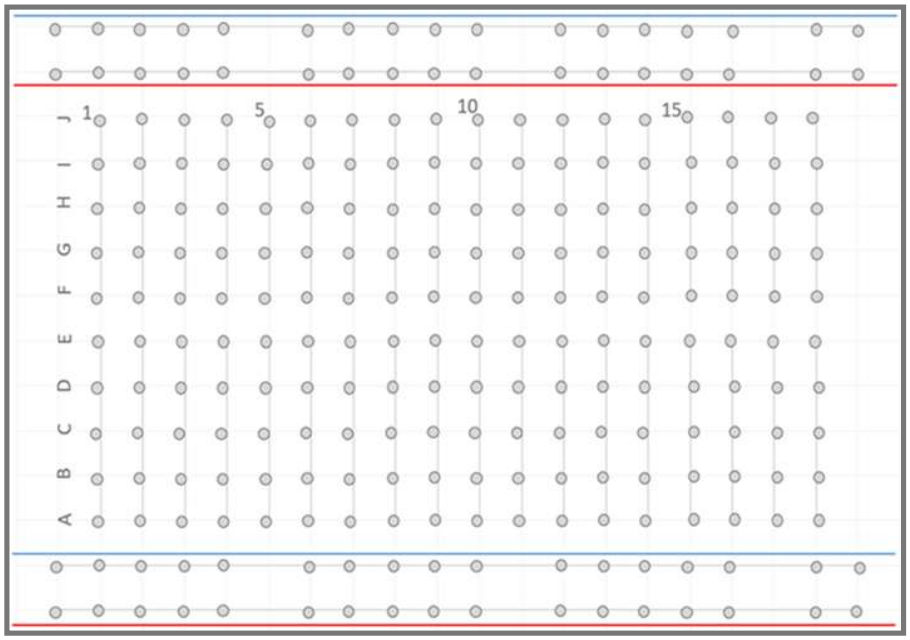

Draw another way to connect the same circuit up and add a latching switch

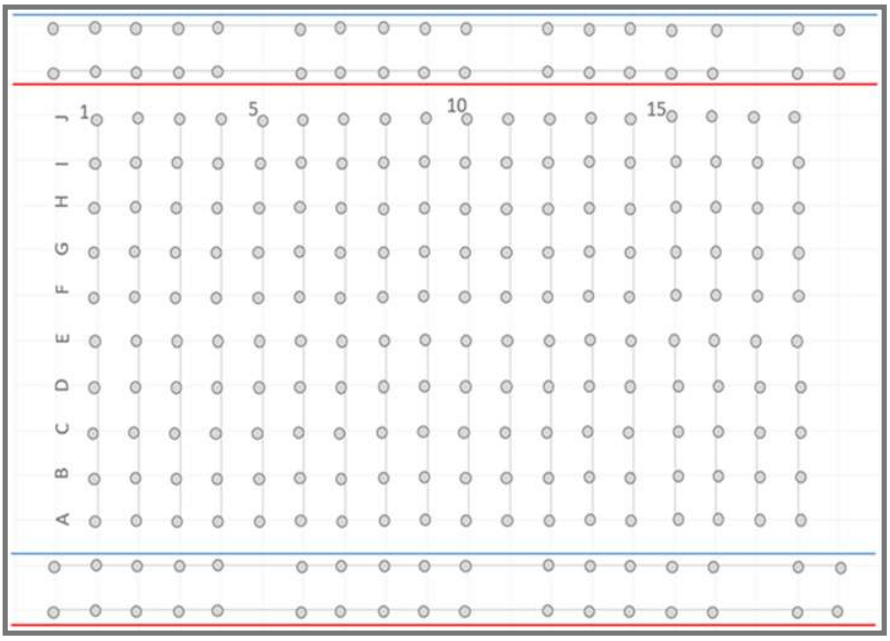

Now look at the components on the breadboard and draw out the circuit diagram that would represent this arrangement.

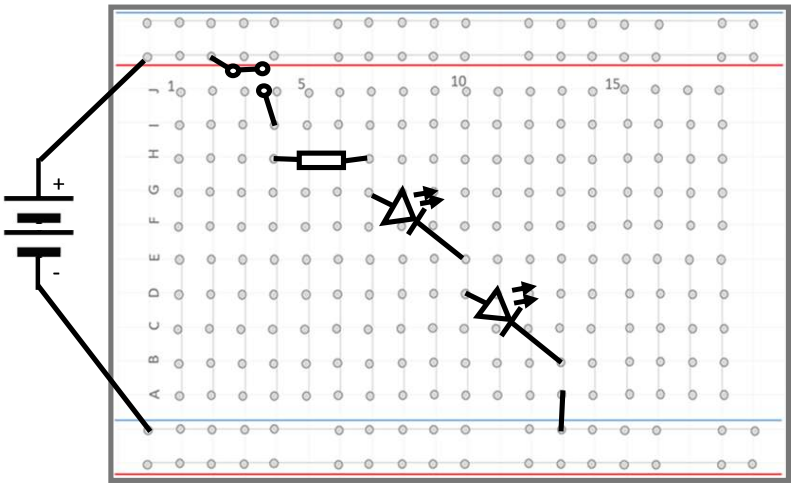

Remember:

Power supply on the left, control in the centre, output on the right.

Make it for real:

Collect the following components, and build the circuit above on a breadboard

6V power supply

You will notice that you need 6V in the circuit on the previous page.

This can be made up using 4 x 1.5 V AA batteries and a 4-way battery holder.

Kit list

Each student should have:

- 1 x breadboard
- 1 x 1kΩ resistor (brown, black, red)
- 2 x red LEDs
- 1 x momentary switch
- Lengths of solid core wire (red and black)
- I pair of wire-strippers
- 1 pair of pliers

FLAT WIREs

Make sure your wires are cut to lay as flat as possible on the breadboard

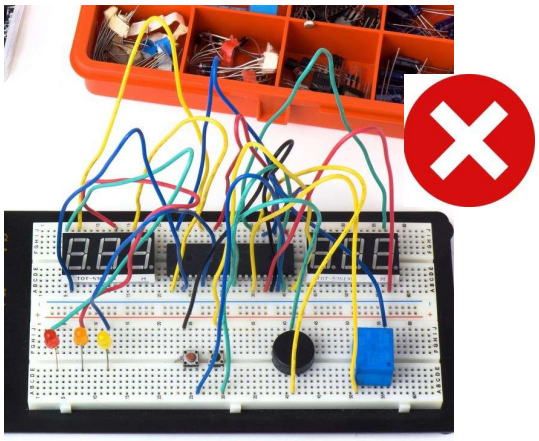

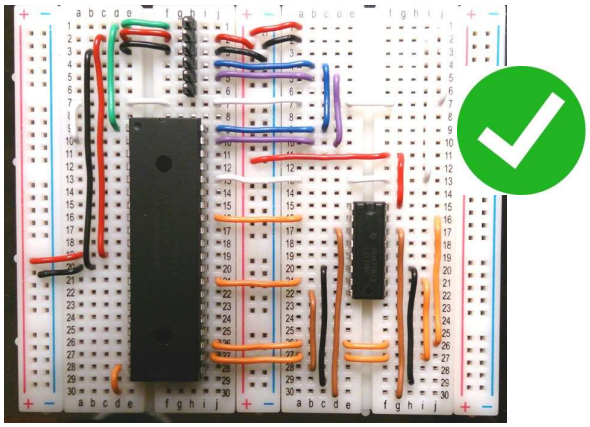

How to achieve flat wires:

1. Strip one end of a wire BEFORE you cut it.
2. Put the stripped end in the breadboard and measure where it needs to reach to if laying flat.
3. Bend the wire at the point it needs to reach to
4. Strip an extra 4mm of length of wire

Momentary switches (button)

Press your button into the breadboard very carefully.

If the legs get bent, it will not work!

Which leg is which - which way around should the button be connected?

The buttons have four legs, which are connected diagonally, like this:

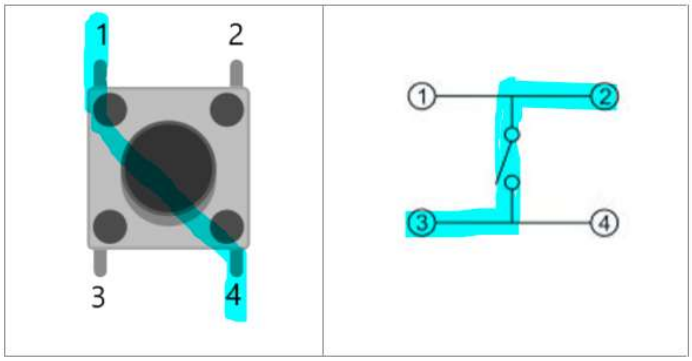

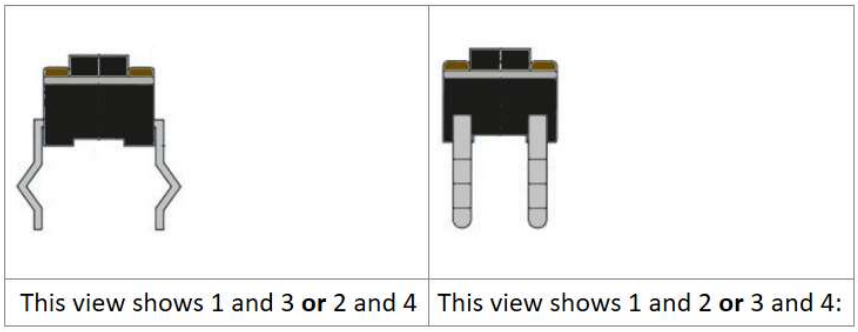

LESSON 2

SERIES circuits

A circuit where components are connected one after another all in a line, is known as a _____ circuit.

It has a drawback: if there is ever a _____ anywhere in the circuit, the whole circuit _____.

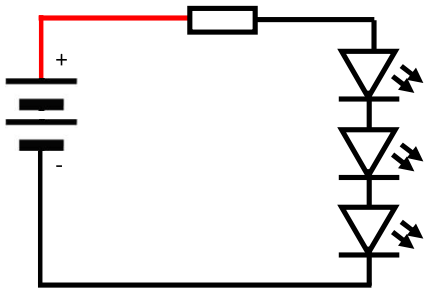

PARALELL circuits

A different way to connect a circuit up is when the components each have their own connection to the power supply.

This is known as a _____ circuit. It is by far the _____ _____ circuit to be found.

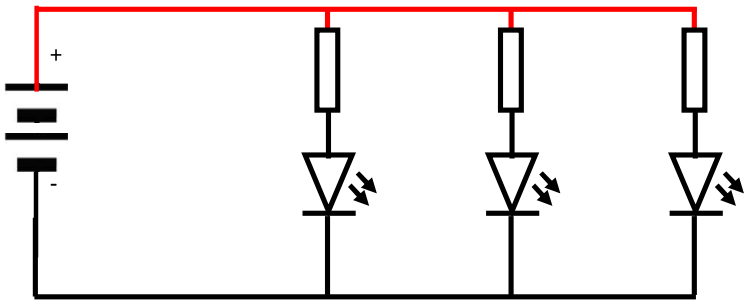

Draw the parallel circuit on the breadboard:

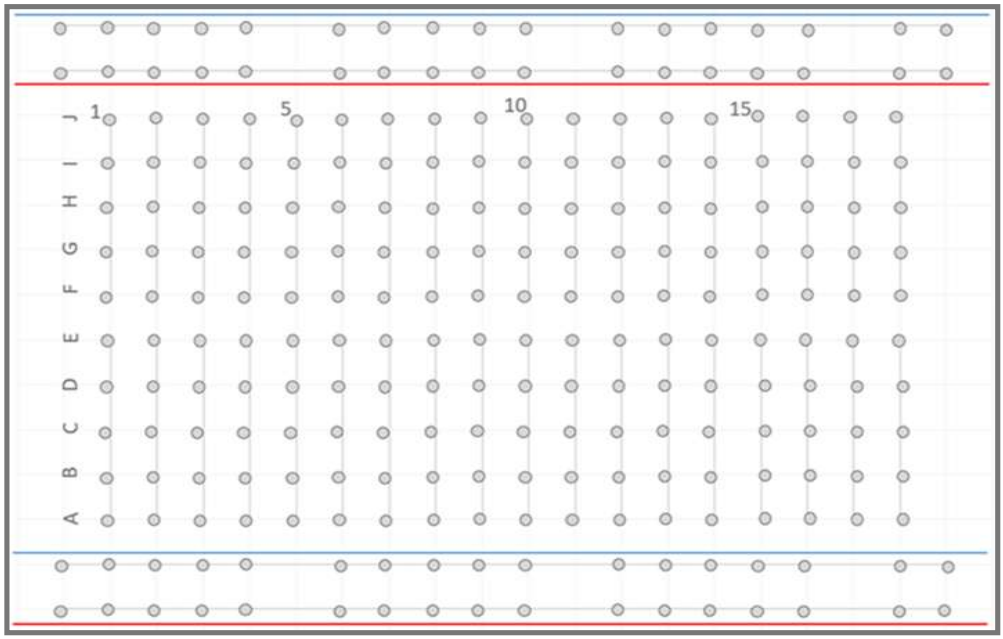

Make it for real:

Create the parallel circuit on your breadboard.

You should have Circuit Wizard on your laptop—if not, use the lab computers.
Circuit Wizard allows you to plan and test how circuits should behave.
This saves time - you can work out problems before you build the real thing.

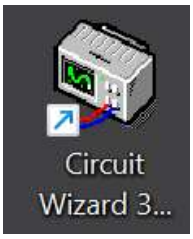

When you open Circuit Wizard, press OK on the dialogue box—it will then set the space up correctly.

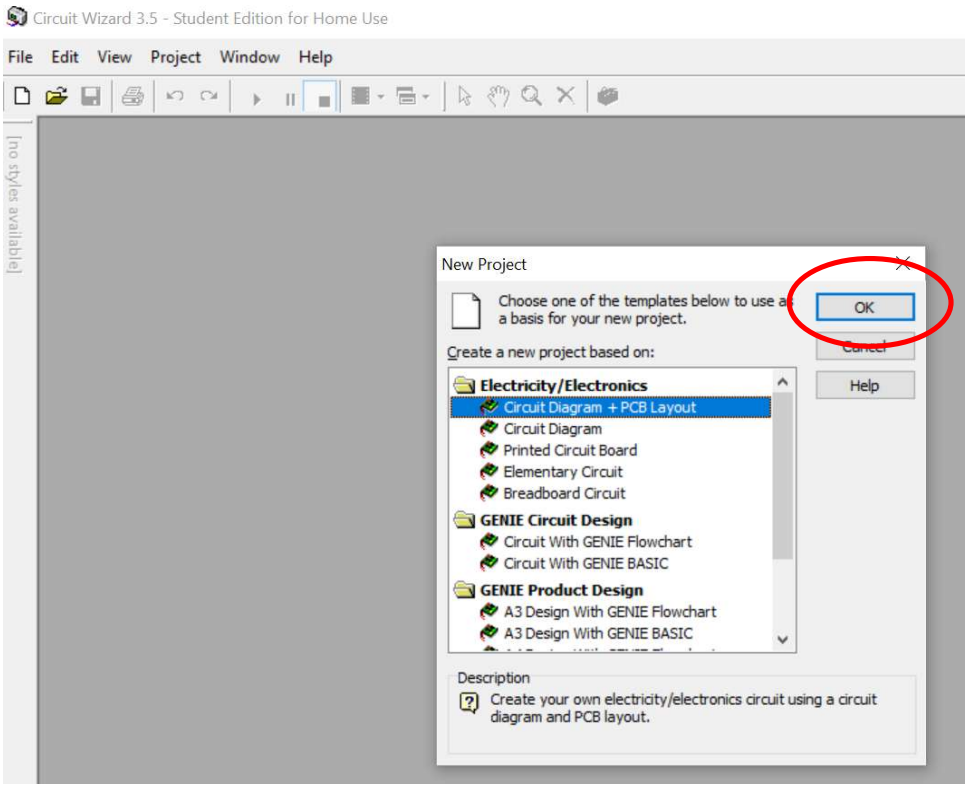

On the right hand side, there is a gallery. It can be icon based or you can use the drop down menu to find the components you need.

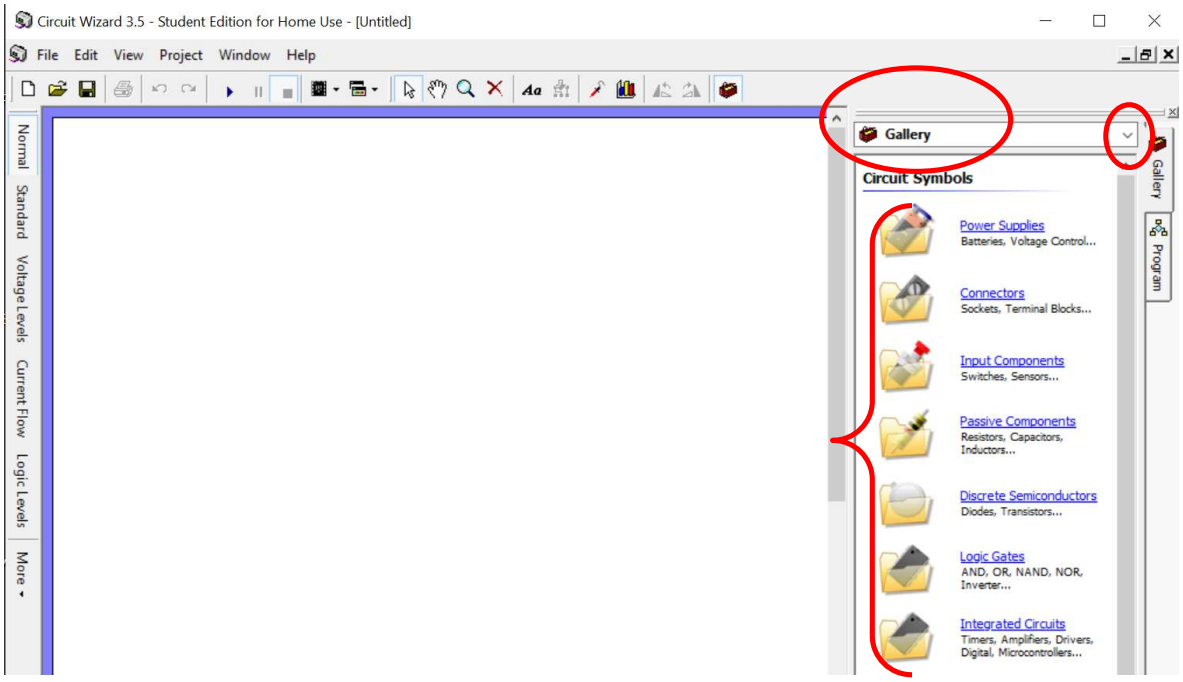

Drag the components you need onto the stage, and double click them to access their settings.

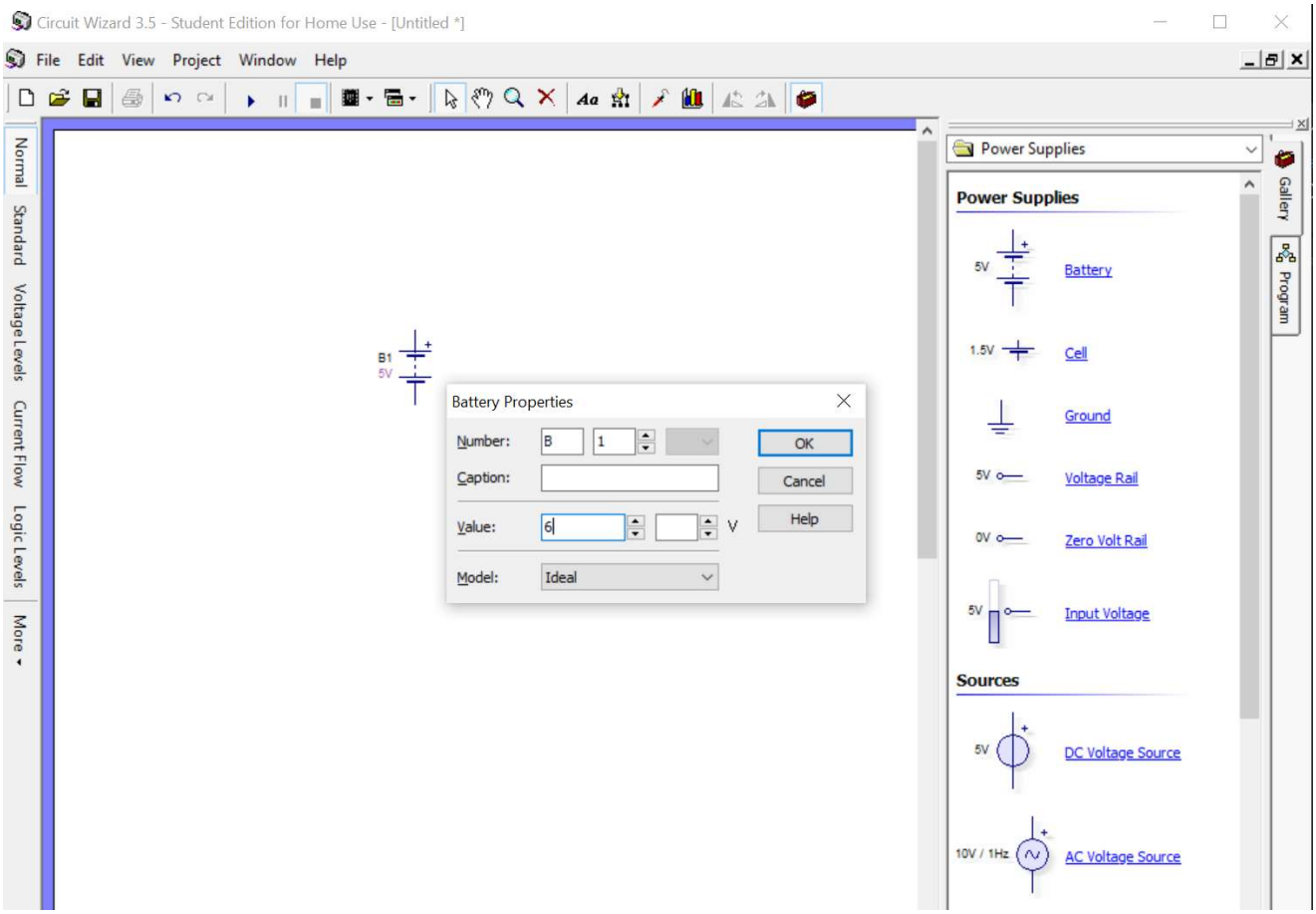

To link the components, hover over them and when they go pink, you will see square handles. Click on those and then click again where you want the connecting line to go. These lines represent the wires in a circuit.

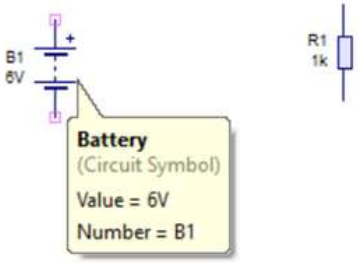

Useful tools such as the pointe to select things, the hand to move the whole stage around, and the cross to delete thing, can be seen in the toolbar. Also, there is an undo icon, and the play button. Use the play button when you want to see if or how your circuit runs.

Now, build your series and parallel circuits in Circuit Wizard!

When you are finished, paste screenshots of your circuits into a new tab in your One Note.

Prototyping—2

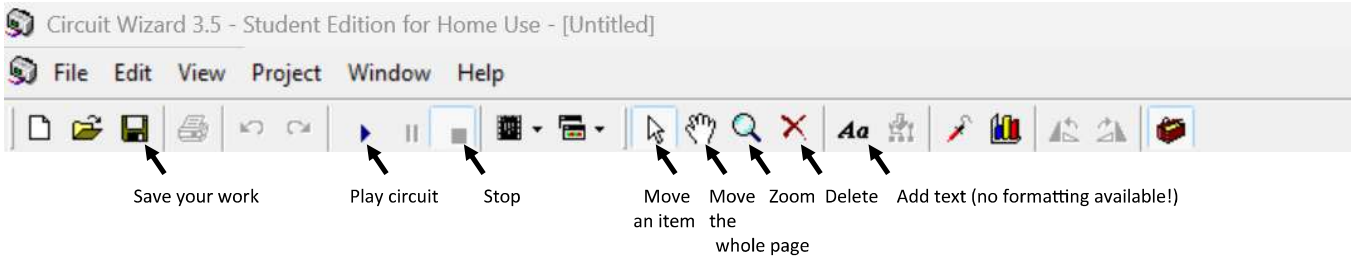

Build the following circuits in Circuit Wizard - add switches, too.

When you are finished, press Play - look for the play triangle on the toolbar.

1. Three LEDs in series

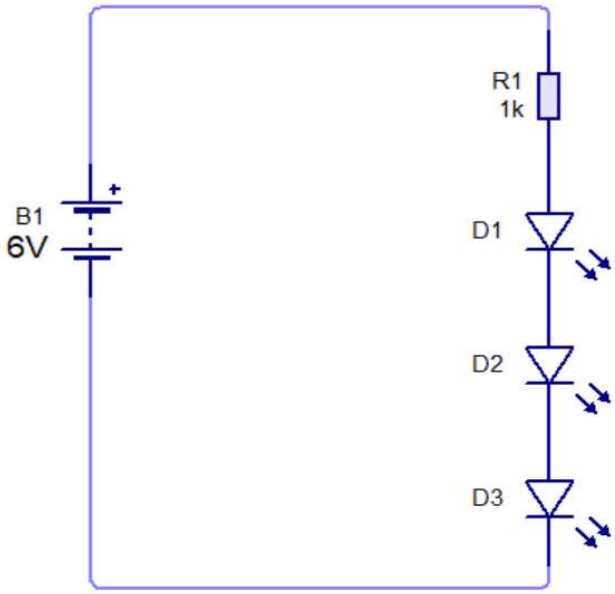
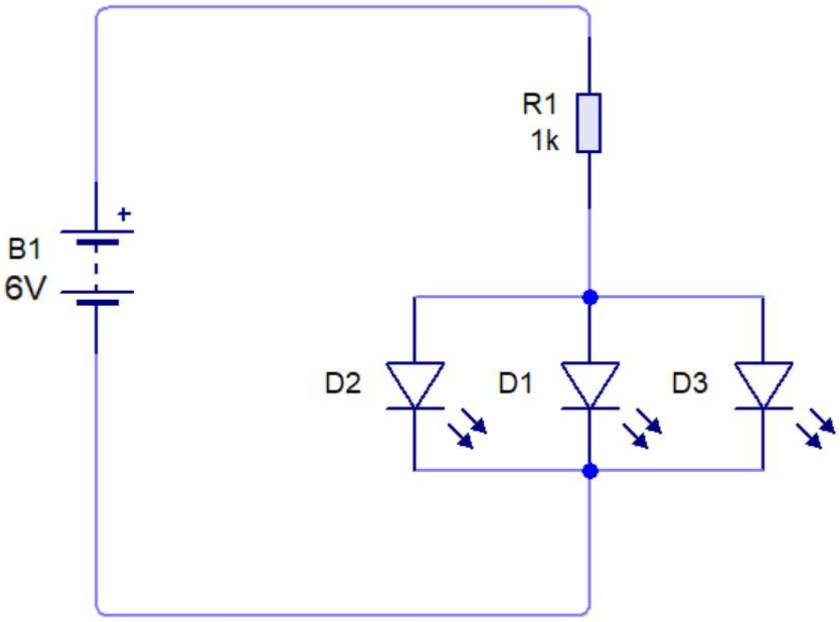
2. Three resistors in