DRAFT—NOT FOR PRINTING

NOT FOR PRINTIN

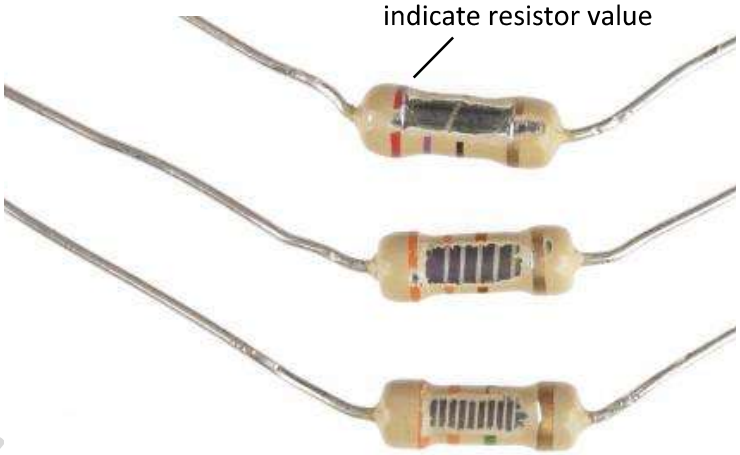

Inside a resistor...

... you would find:

- **A solid** _____ _____ known as the **carrier**
- **A thin** _____ _____of carbon on the rod
- **A helical cut** to set the _____ _____
- **An insulating coating** on the _____
- **Painted bands to** indicate _____ value

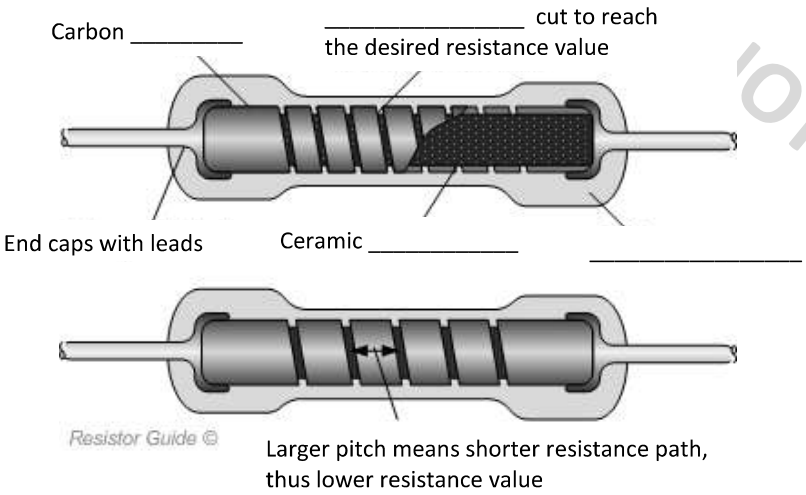

The carbon film surrounds the ceramic rod at the centre of the resistor.

Current moves through the carbon film when the voltage for the circuit is applied.

A helical pattern is a spiral. A helical shape is cut into the carbon film.

A thinner pitch means the helical path for the current is longer.

A longer, thinner path for current = _____ resistance.

This is how the value of a resistor is engineered.

DRAFT—NOT FOR PRINTING

Variable resistors

A standard resistor contains a fixed helical track of carbon film.

A **variable** resistor is another component with a carbon track inside.

The variable resistor has a **wiper** you can **slide along** the track.

This lets you change the resistor value in your circuit by simply moving the wiper.

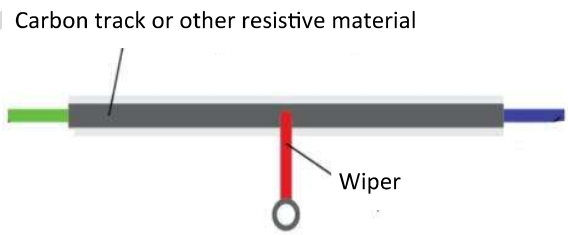

EXPERIMENT: Use a multi meter to meause voltage across different lengths and widths on a graphite track.

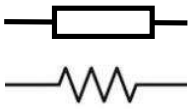

Remember the symbols for a fixed resistor?

For a **variable resistor**, just put an **arrow** through them.

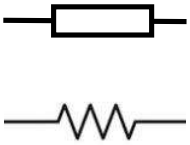

Create the following circuit in Circuit Wizard.

> Note the voltage values the voltmeters give when you '**play**' the circuit.

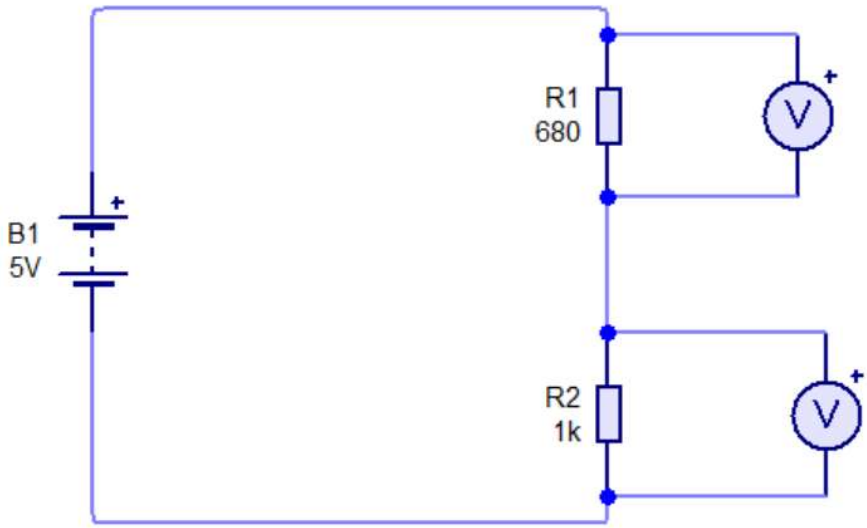

Voltage reading:

_____

Voltage reading:

_____

DRAFT—NOT FOR PRINTING

Potentiometer

A variable resistor is also called a potentiometer because it allows you to change how much voltage is 'tapped off' the supply for any component to use.

You could say it **divides up the voltage supply across different components**.

Therefore, it is also called a **potential divider**, with symbol as shown below.

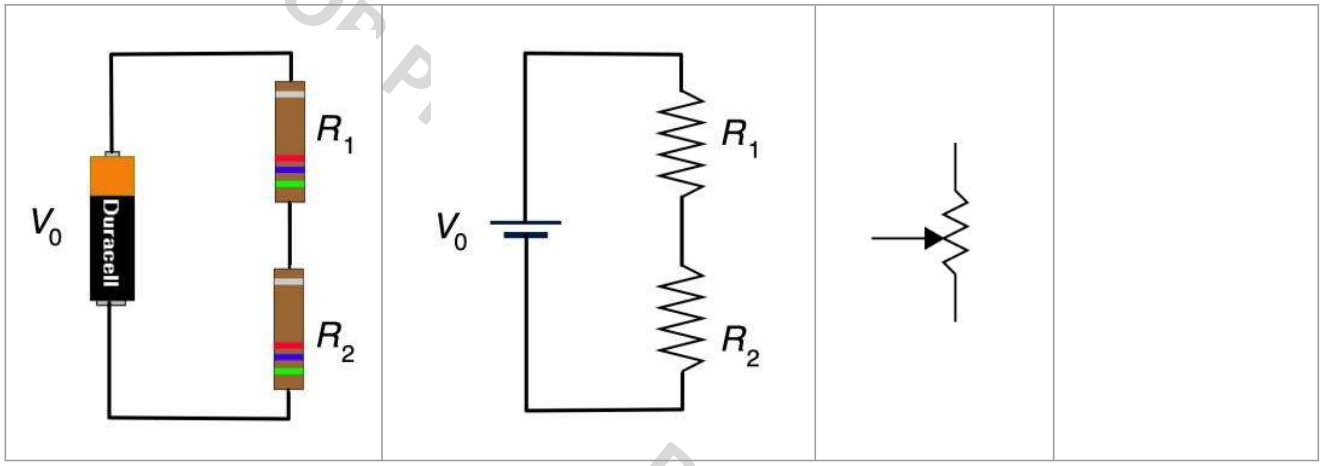

Voltage provides the energy in a circuit, or the electrical push which makes the current flow.

As current flows through the components, some of that electrical energy gets used up by each component.

The _____ of all the _____ _____ in a circuit…

… _____ _____ ____ to the _____ _____ by the battery or power supply.

Here, you can see a **100kΩ potentiometer** with a knob which allows you to move the wiper across the track.

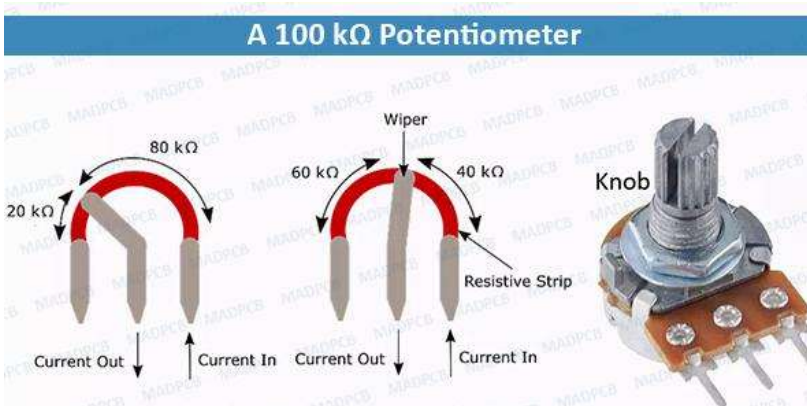

If you connect this potentiometer to a 5V supply, the two outer legs will be at fixed voltages: one at 5V and the other at 0V. The middle leg is the wiper leg and it gives a voltage somewhere between 0V and 5V. **Where the wiper sits along the internal resistive strip determines what fraction of the 5V you get out.**

DRAFT—NOT FOR PRINTING

Create the following circuit in Circuit Wizard.

Space it out as shown so that you can see the relevant values when you press play.

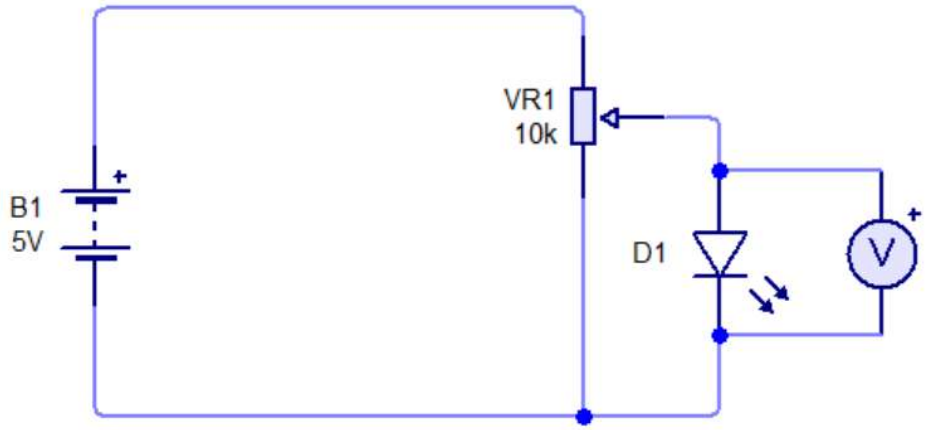

When you press play, if you click the potentiometer **once**, a control will appear where you can move the wiper around the track.

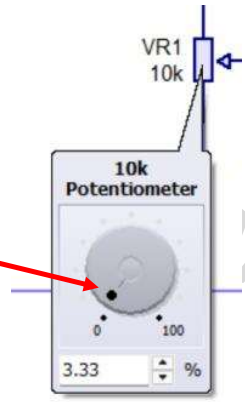

Can you remember the forward voltage of a LED? _____

At what voltage does the LED in your circuit light? _____

> Now, build the circuit on a protoboard. (You will be using our 6V supply packs)

Potentiometer — uses

- Volume controls
- Light dimmers
- Game console controls for left, right, up and down movement
- Motor controls, for increasing / decreasing speed
- There are also skeleton potentiometers used within a circuit to **set** a voltage level for certain parts of the circuit. We will see this later on.

DRAFT—NOT FOR PRINTING

Transistors

These electronic components are extremely common.

They allow electronics engineers to introduce control, sensitivity and power gain into a circuit.

The three legs are named: the collector, the emitter and the base.

Symbol

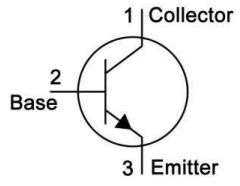

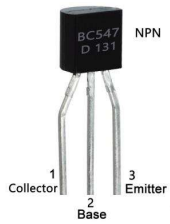

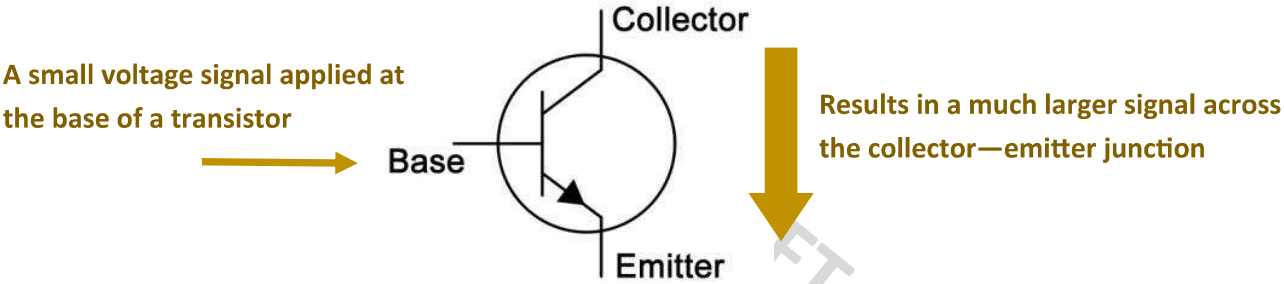

Transistors allow current to flow to an output when an input is applied to the transistor base.

The input can be a switch, a temperature sensor, a light sensor, etc.

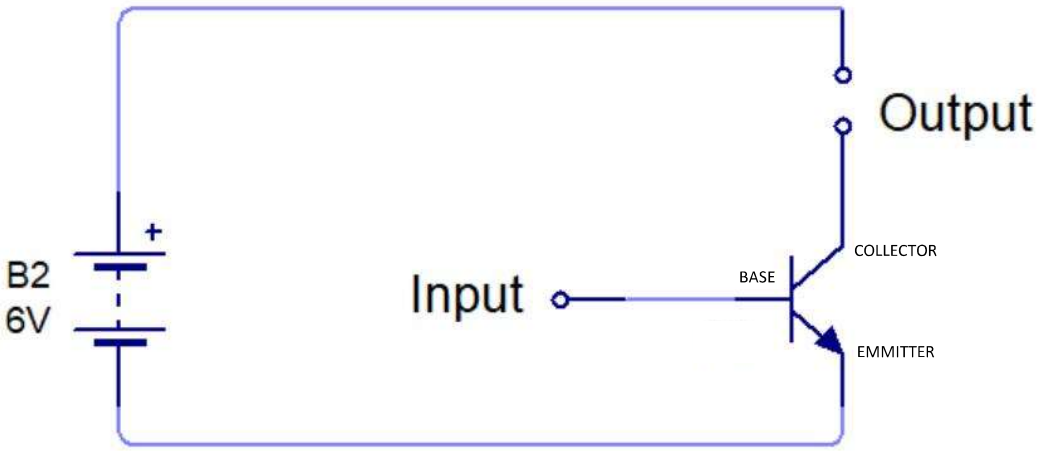

DRAFT—NOT FOR PRINTING

We use a potential divider *(outlined in black)* to set the point at which the transistor conducts.

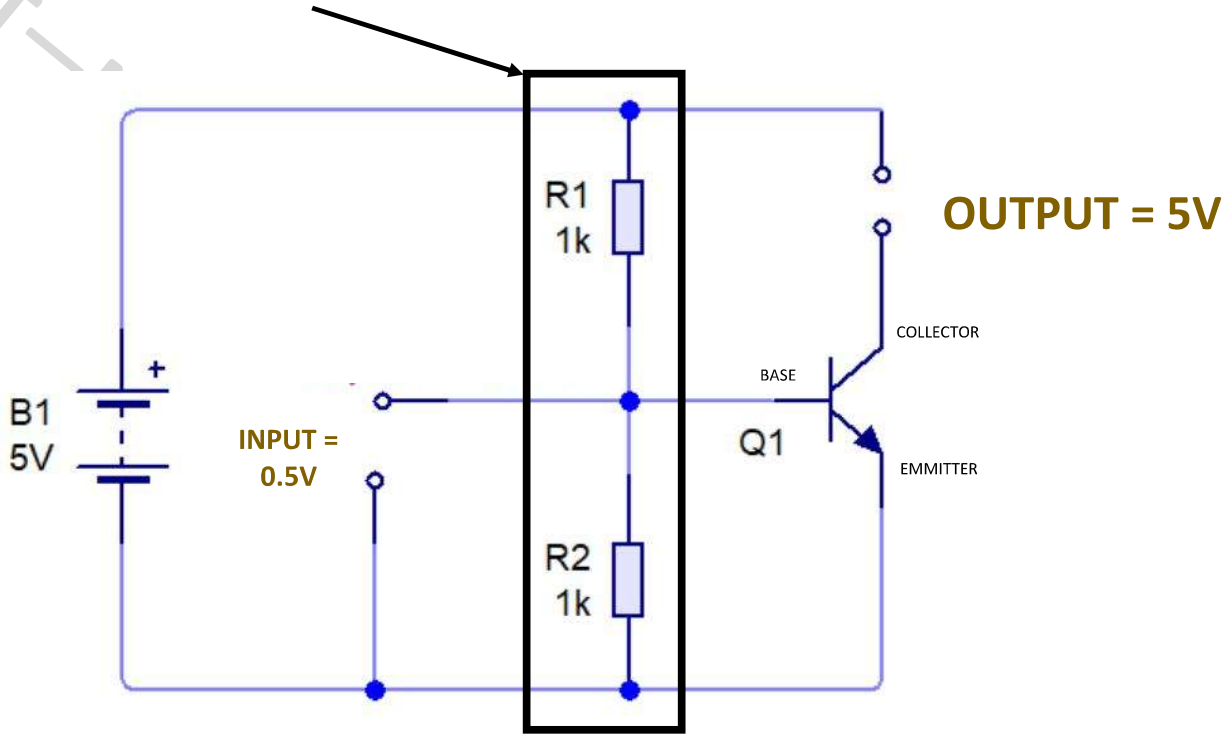

Remember**, a component which acts as a potential divider is a potentiometer**.

In both figures below, the voltage at X is controlled by dividing it using the value of the resistors or the percentage of the resistive track that the potentiometer wiper has moved to.

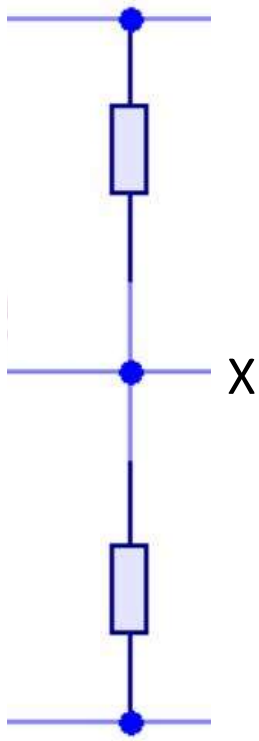

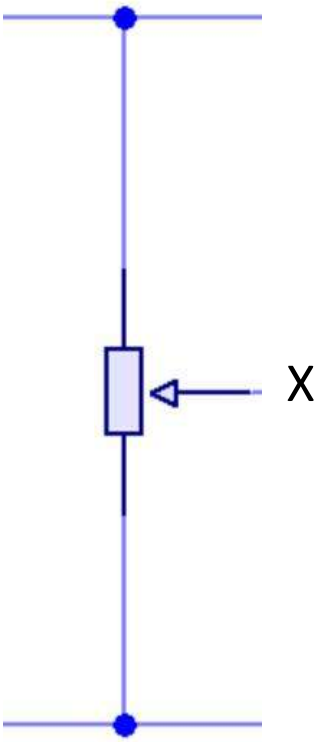

DRAFT—NOT FOR PRINTING

It is better in some cases to use a potentiometer than just having a variable resistor.

For example if you are setting the input level to a transistor.

Build the circuit below in circuit wizard, using a 100K potentiometer connected to the transistor base.

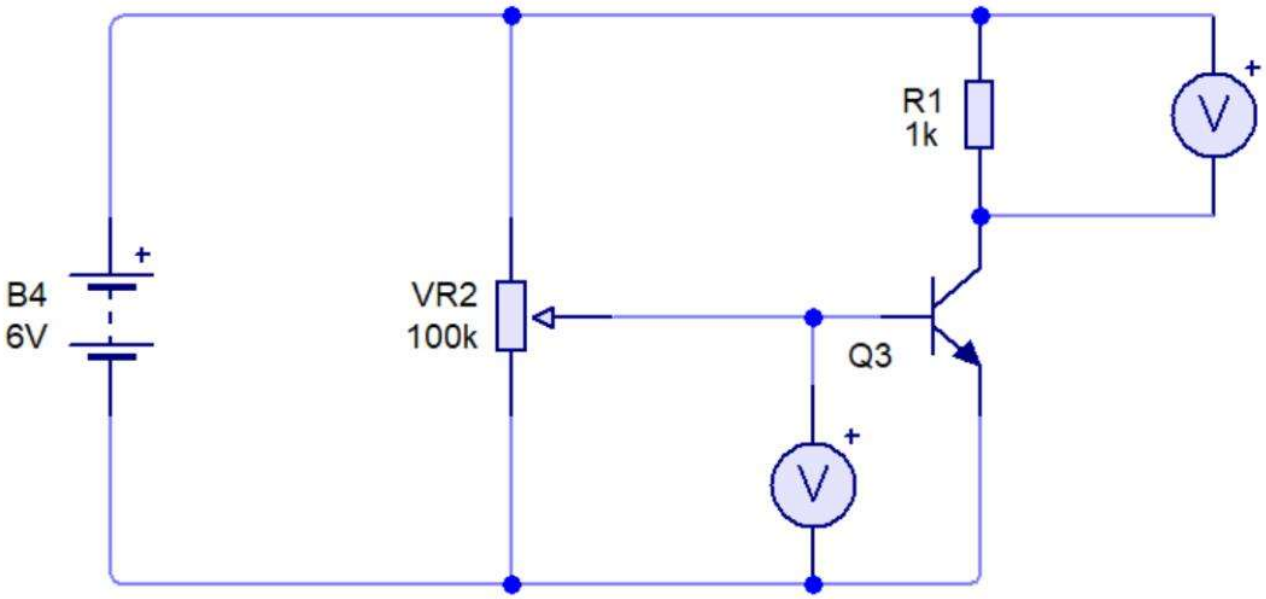

Now, when the circuit is playing, click once on the potentiometer to adjust the wiper position/ percentage of the potentiometer, to find out at which value/voltage the output reaches maximum.

What is the maximum voltage at the base of the transistor in this circuit that is required to give maximum voltage across the output?

> Now, build the circuit on a protoboard. (You will be using our 6V supply packs)

DRAFT – NOT FOR PRINTING

Sensors

A **sensor** is a device that **detects something** about the world and **turns it into a signal**.
Examples:

A microphone senses _____

A thermistor senses _____

An LDR senses

_____

_____

Sensors are basically the
"**eyes, ears, and skin**"
of electronic devices.

LDR = Light Dependent Resistor

This sensor detects light levels.

It is a **resistor** whose resistance **changes depending on how much light** hits it.

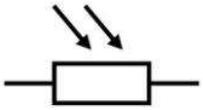

Light Level	Resistance	What it Means
Bright light:	**Low** resistance	Electricity **flows easily**
Darkness:	**High** resistance	Electricity **struggles to pass**

Examples of use of an LDR

1. _____ _____turning on when it gets dark
2. _____ changing screen brightness
3. _____ _____ outside homes
4. **Garden solar lights**

Examples of use of an LI

- **Streetlamps** turning
when it gets dark
- **Phones** changing scre
brightness

LDR as a voltage divider

An LDR and a resistor can make a **voltage divider**.

Which two components did we see before, that make up a voltage divider?

_____

Add the symbols of the two components to the circuit below.

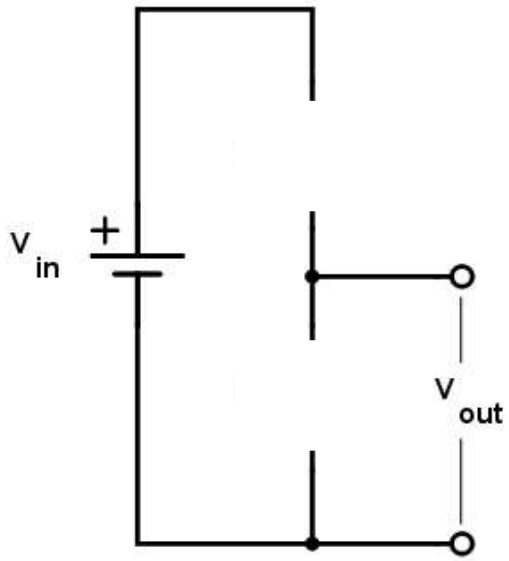

The value of the Vout is the voltage that appears across the second component in the voltage divider.

It is the portion of the input voltage (Vin) that remains after some of the voltage has dropped across the first component.

When the value of the two resistors in a voltage divider are **fixed**, the output voltage (Vout) is fixed at a constant value. If we substitute one of the components for a component whose value can change, it follows that Vout would change too.

We can use this behaviour to control what happens in another part of the circuit—like the input to a _____.

E.g. if we swap one of the resistors for a _____ _____ resistor, the transistor's input would depend on how _____ the surroundings are.

This is how a voltage divider is used to create a _____.

sensor **transistor** **bright** **light dependent**

DRAFT—NOT FOR PRINTING

DR

on

een

Which components can you recognise?

Put circles around:

The potential divider

The transistor

The resistor protecting the LED

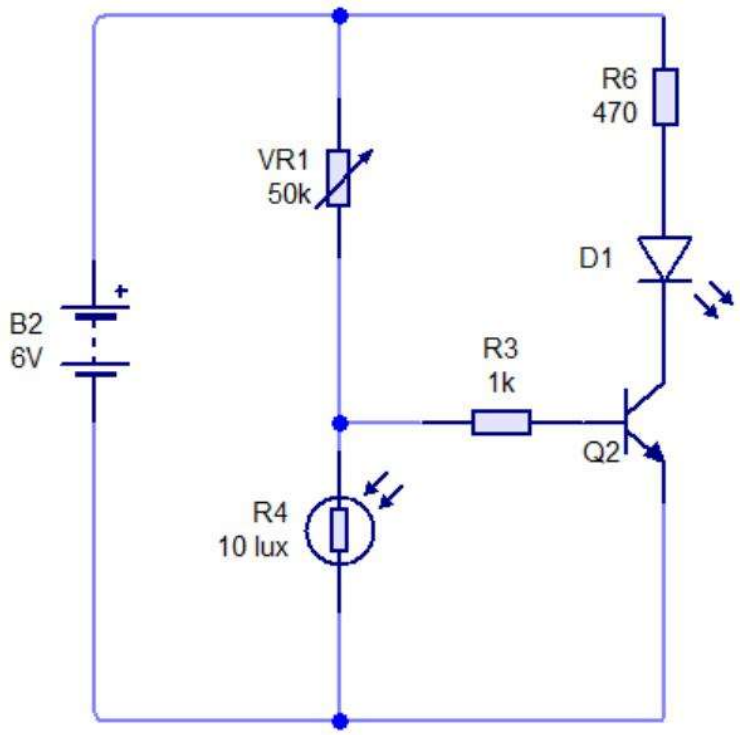

Build this circuit in Circuit Wizard.

Click on the LDR and drag the lux bar up to change the brightness value it is sensing.

The threshold value is the value at which the

	LDR lux value	LDR resistance
Lowest value		
Highest value		
Threshold value		

NOT FOR PRINTING

DRAFT—NOT FOR PRINTING

DRAFT—NOT FOR PRINTING

Component symbols

Draw the correct symbols in the table below. You will need to learn these component symbols.

Pay attention to the shapes each symbol is made of.

Variable Resistor *Make sure*		
Potentiometer *Make sure you*	or	Also known as a potential divder
Voltmeter *Make sure t*		
Transistor		
Light Dependent Resistor		

DRAFT—NOT FOR PRINTING

Uses of transistors

1. **Amplification**—transistors can amplify signals, turning small electrical signals into larger ones.

   i) Speakers, headphones, microphones, hearing aids, radio & TV broadcasting equipment

   Transistors take a weak signal and boost it—so they are used to make louder, clearer sound.

   Ii) Communications devices

   They are used in circuits that handle signal processing of radio waves and frequencies

   E.g., wifi routers, Bluetooth devices, radios, mobile phone antennae, GPS

   Iii) Power regulation

   Transistors can control and stabilise voltage and current in power systems. You'll find them in:

   Battery chargers, solar panel systems, laptop chargers, Power grids

   iv)Sensors and embedded systems

   Sometimes you don't need a whole computer, you just need a small circuit with a small processor to do one thing well. Tiny processors with millions of tiny transitors, can be embedded in things like

   washing machines, microwaves, remote-controlled cars and toys.

   smart home devices (alarms, thermostats, doorbells, etc)

   Also cars—engine control units and parking sensors

   And medical devices (ECG machines and blood glucose monitors)

2. **Switching**—transistors act as switches, causing an output when a small signal is applied to the input. The speed at which they do this is extremely fast.

   i) Computers and smartphones.

   Transistors work at very high speed, so they are useful for controlling binary signals on a circuit. As we know, binary is the language of computers! Every time you run a program you have written in Python, the computer will first turn your Python into the 1s and 0s of binary. This is known as machine code, and billions of transistors are each used to set individual 1s and 0s in the machine code.

   ii) Motors

   Transistors can regulate power to motors by switching rapidly or controlling the motor's speed. They are used in electric vehicles (EV motor controllers), drones, fans and ele ctric tools, other industrial machines.

DRAFT—NOT FOR PRINTING