Casting Process

- Casting is one of the earliest **metal-shaping methods** known to human beings.
- It generally means **pouring molten metal** into a **refractory mould** with a cavity of the shape to be made, and allowing it to solidify.
- When **solidified**, the desired metal object is taken out from the refractory mould either by **breaking the mould** or by **taking the mould apart**.

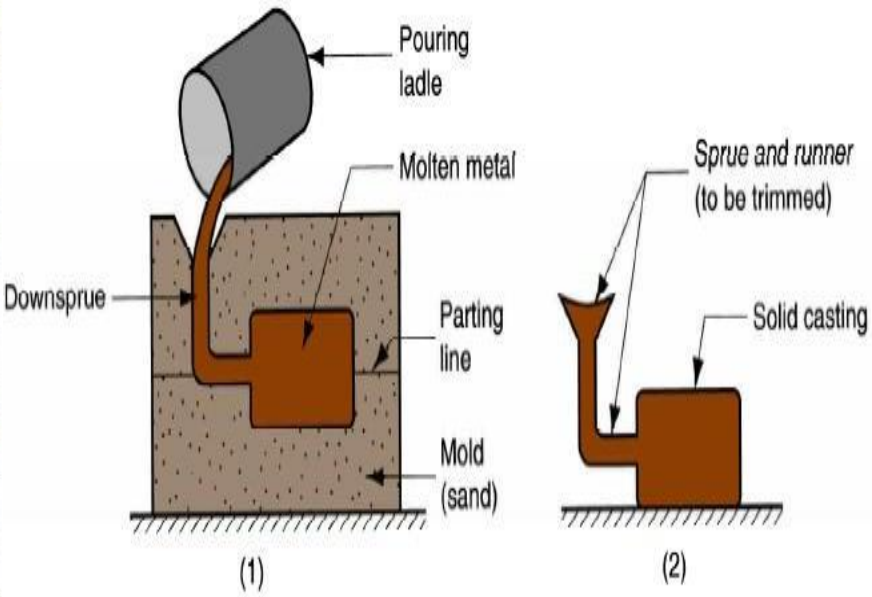

Flask

- A moulding flask is one which **holds the sand mould intact**.
- Depending upon the position of the flask in the mould structure, it is referred by various names such as **drag, cope and cheek**.
- It is made up of **wood for temporary** applications
- Generally of **metal for long-term use**.

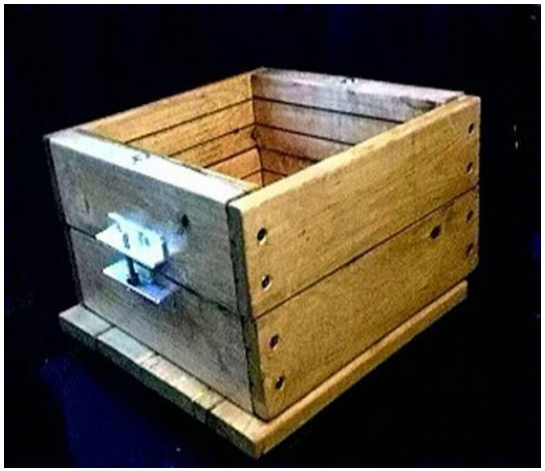

Cope, Drag and Cheek

- Lower moulding flask.
- Upper moulding flask.
- Intermediate moulding flask used in three-piece moulding

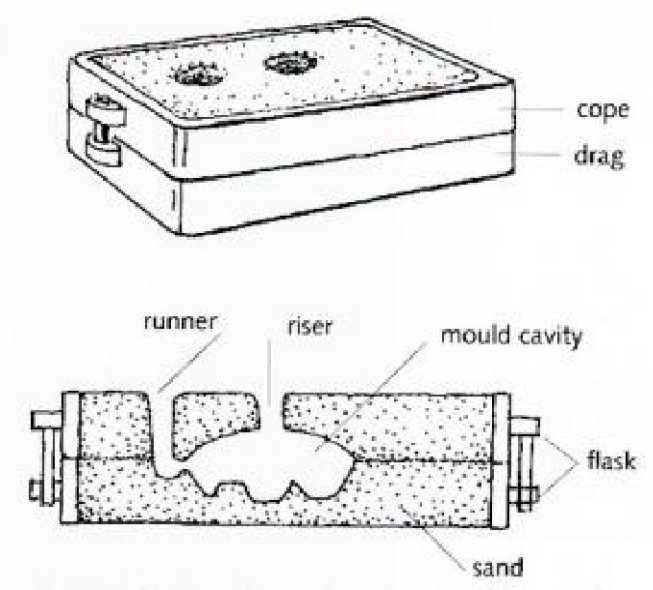

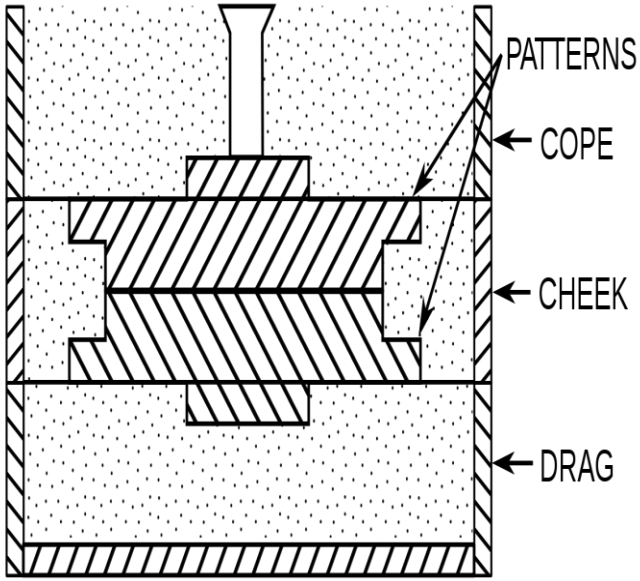

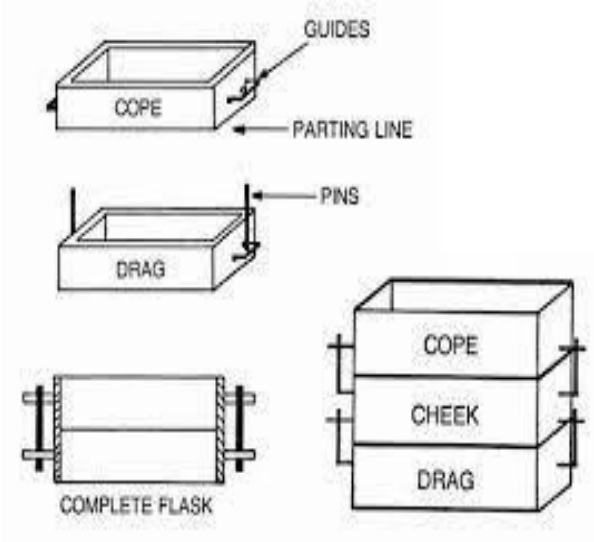

Pattern

- Pattern is a replica of the final object to be made with some modifications.
- The mould cavity is made with the help of the pattern.

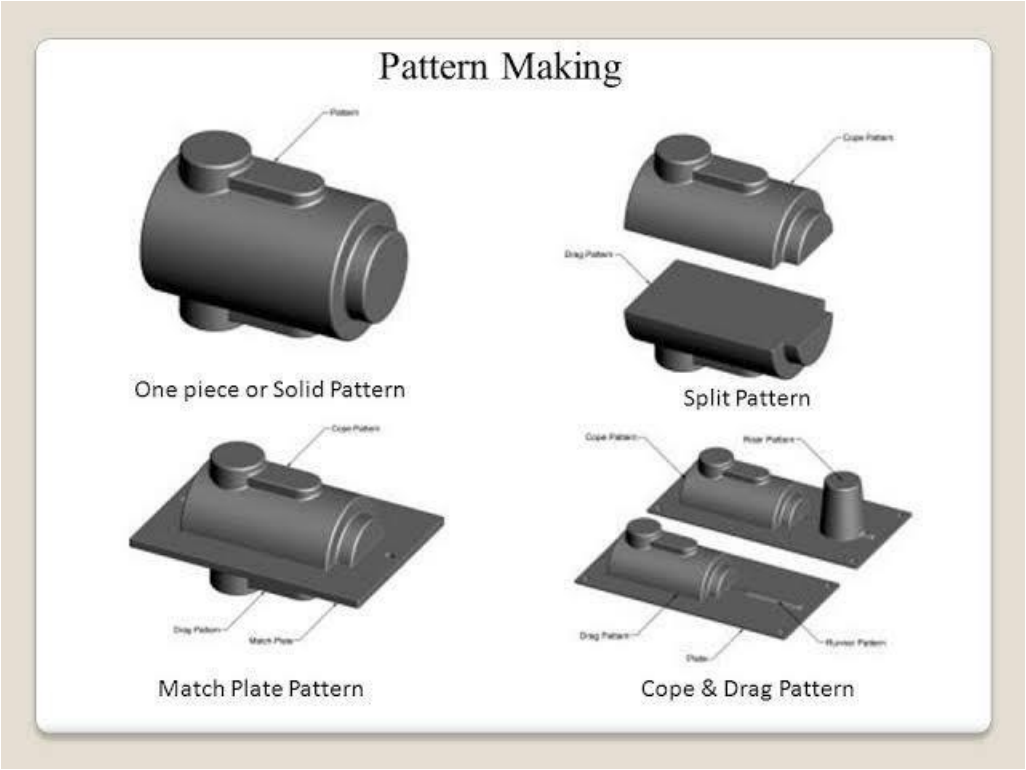

Parting line

This is the dividing line between the two moulding flasks that makes up the sand mould,

In split pattern it is also the dividing line between the two halves of the pattern

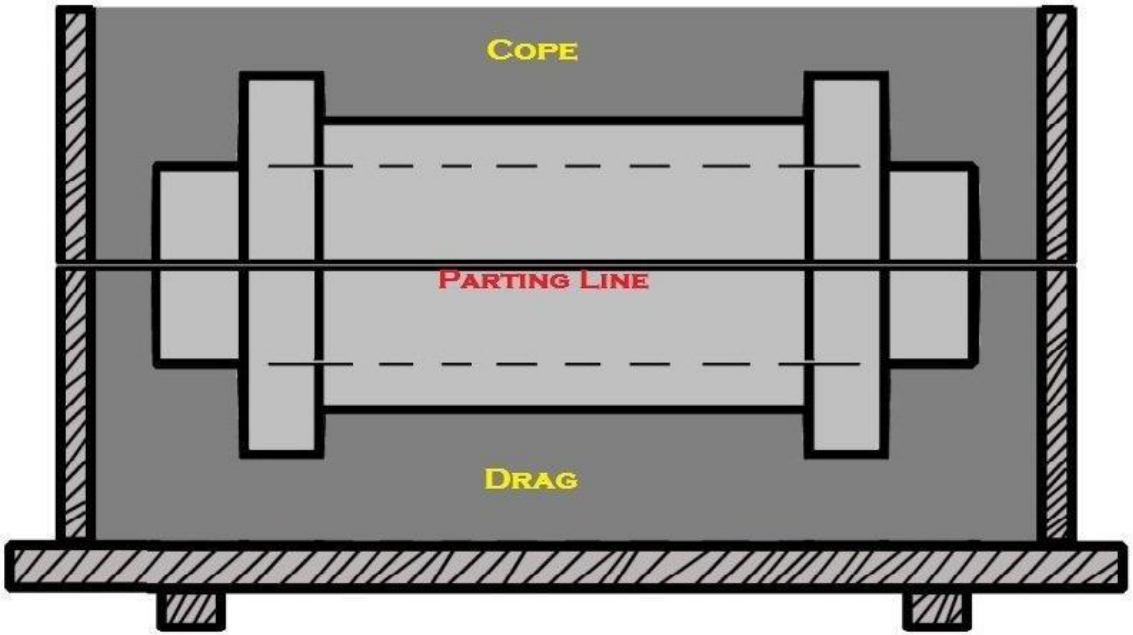

Bottom Board

This is a board normally made of wood, which is used at the start of the mould making. The pattern is first kept on the bottom board. **Sand is sprinkled on it** and then the ramming is done in the drag

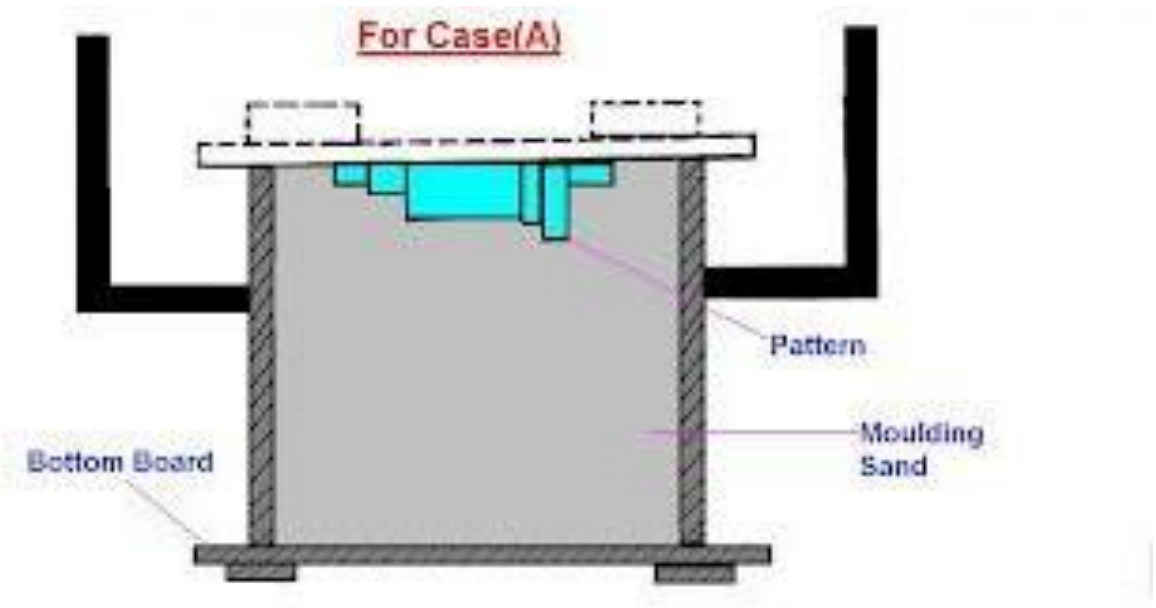

Moulding sand

Facing sand: The smallest amount of carbonaceous material sprinkled on the inner surface of the moulding cavity to give better surface finish to the castings.

Moulding sand: It is the freshly prepared refractory material used for making the mould cavity. It is a mixture of silica, clay and moisture in appropriate proportions to get the desired results and it surrounds the pattern while making the mould,

Backing sand: It is what constitutes most of the refractory material found in the mould. This is made up of used and burnt sand.

Pouring Basin

Pouring basin:- A small funnel-shaped cavity at the top of the mould into which the molten metal is poured.

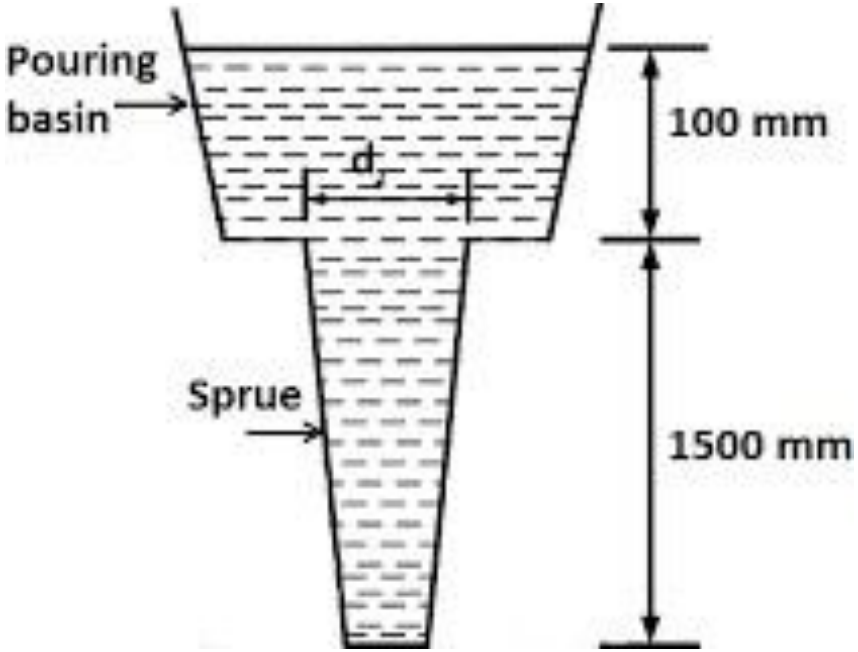

Sprue, Runner and Gate

Sprue: The passage through which the molten metal from the pouring basin reaches the cavity. In many cases it controls the flow of metal into the mould.

Runner: The passageways in the parting plane through which molten metal flow is regulated before they reach the mould cavity

Gate: The actual entry point through which molten metal enters the mould cavity.

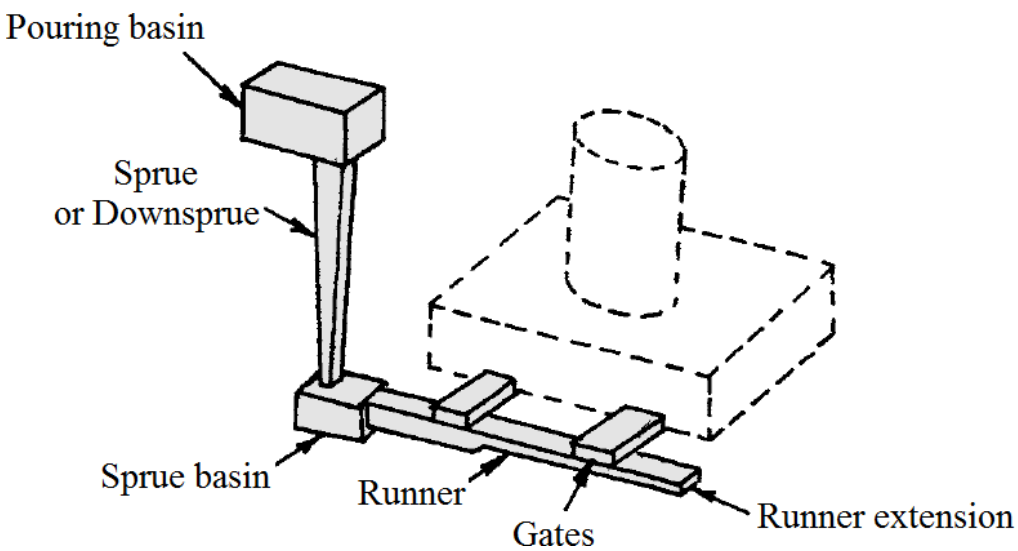

Chaplets

Chaplets are used to support cores inside the mould cavity to take care of its own weight and over-come the metallostatic forces.

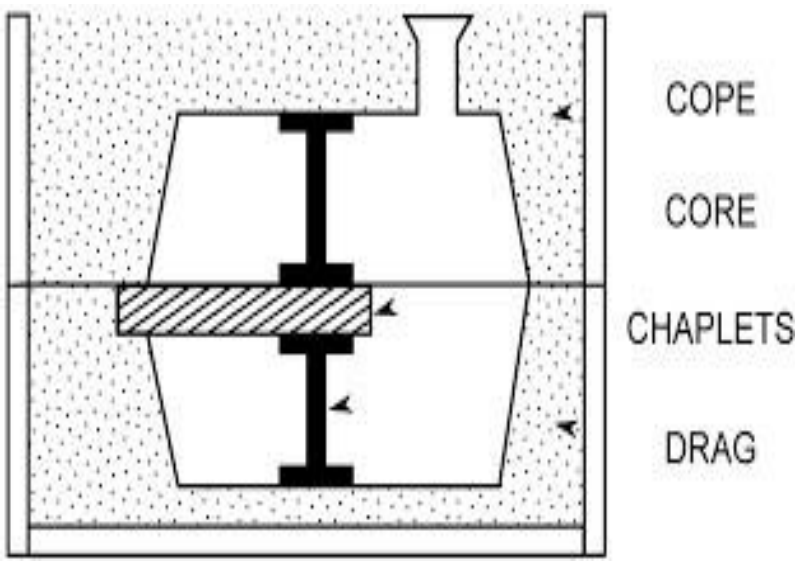

Core

- It is used for making hollow cavities in castings

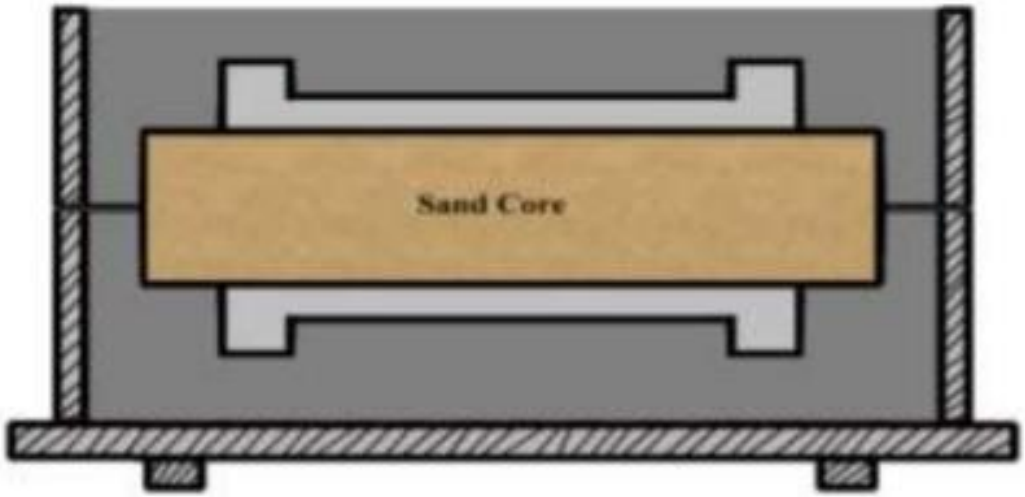

Chill

Chills are metallic objects, which are placed in the mould to increase the cooling rate of castings to provide uniform or desired cooling rate.

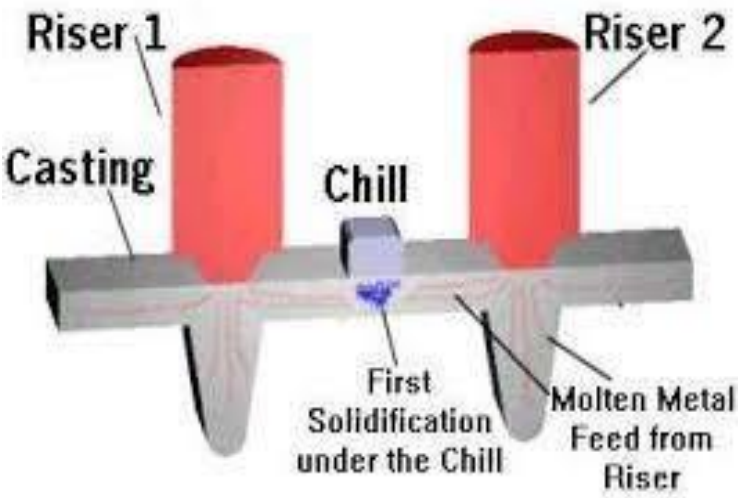

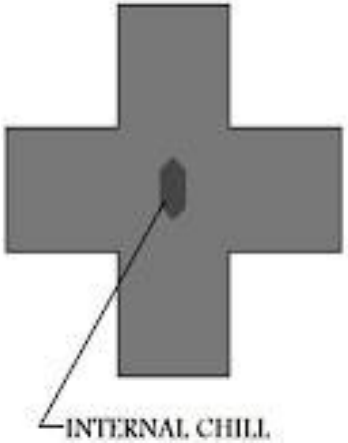

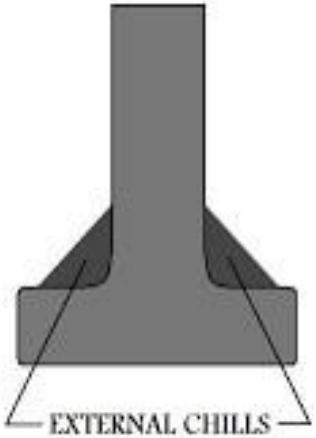

Riser

It is a reservoir of molten metal provided in the casting so that hot metal can flow back into the mould cavity when there is a reduction in volume of metal due to solidification.

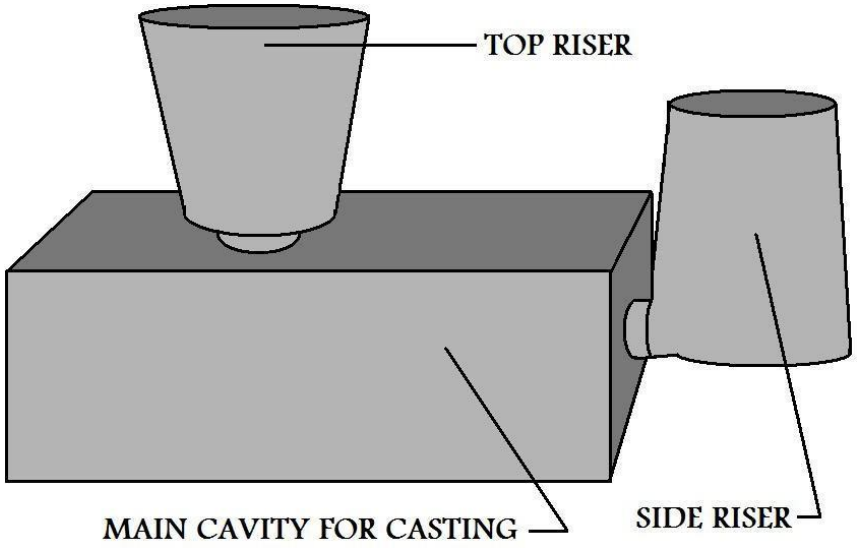

Thank You