Drilling Machines

Drilling Machine

- Drilling is the operation of producing circular hole in the work-piece by using a rotating cutter called drill.

- The machine used for drilling is called drilling machine.

- The drilling operation can also be accomplished in lathe in which the drill is held in tailstock and the work is held by the chuck.
- The most common drill used is the twist drill.

Drilling Machine

- It is the simplest and accurate machine used in production shop.

- The work piece is held stationary i.e. Clamped in position and the drill rotates to make a hole.

- Types :-

  Based on construction: Portable, Sensitive, Radial, up-right, Gang, Multi-spindle.

  Based on Feed: Hand and Power driven.

Sensitive Drilling Machine

- Drill holes from 1.5 to 15 mm.
- Operator senses the cutting action so sensitive drilling machine.

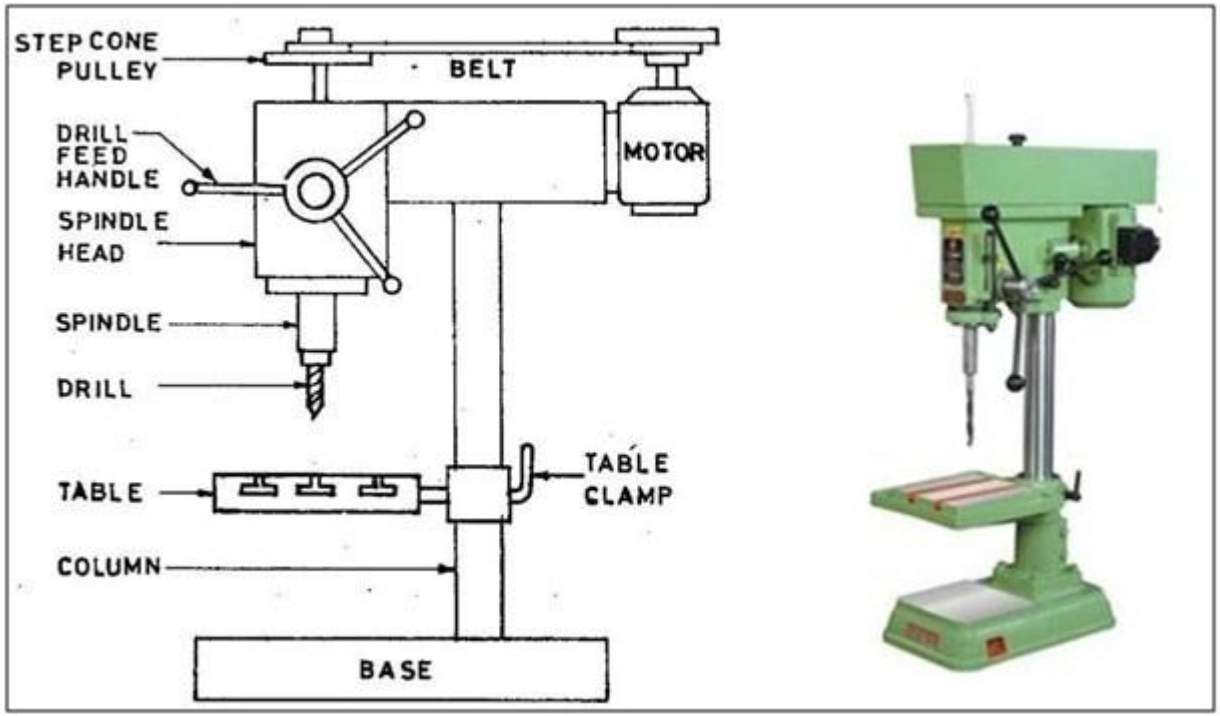

Source:- https://studentlesson.com/drilling-machine/

Up-right Drilling Machine

- Drill holes up to 50 mm.
- Table can move vertically and radially.

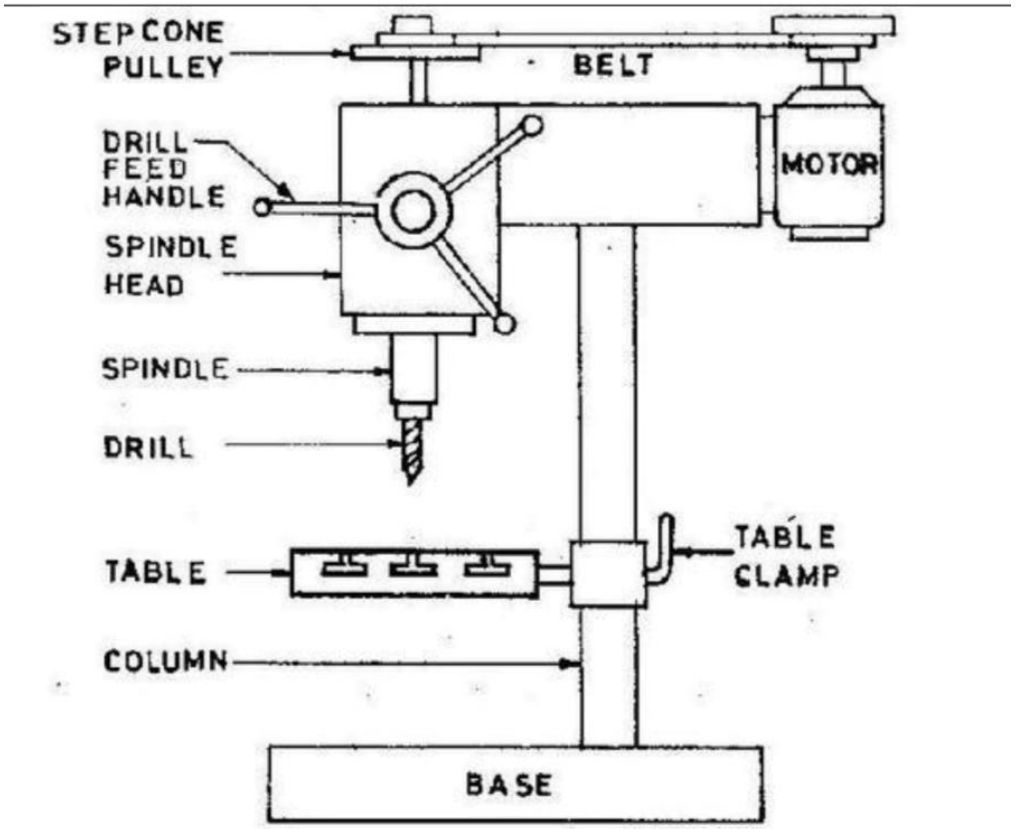

Radial Drilling Machine

- **Radial Drilling Machine is used to drill the holes in the given radial distance when the component size is larger in terms of height with respect to the work table.**
- When the component is large, it cannot fit its structure in the Machine vice. Therefore, the component has to be placed on the ground and the Radial arm of the drilling machine has to be rotated with respect to the component to do the operation.

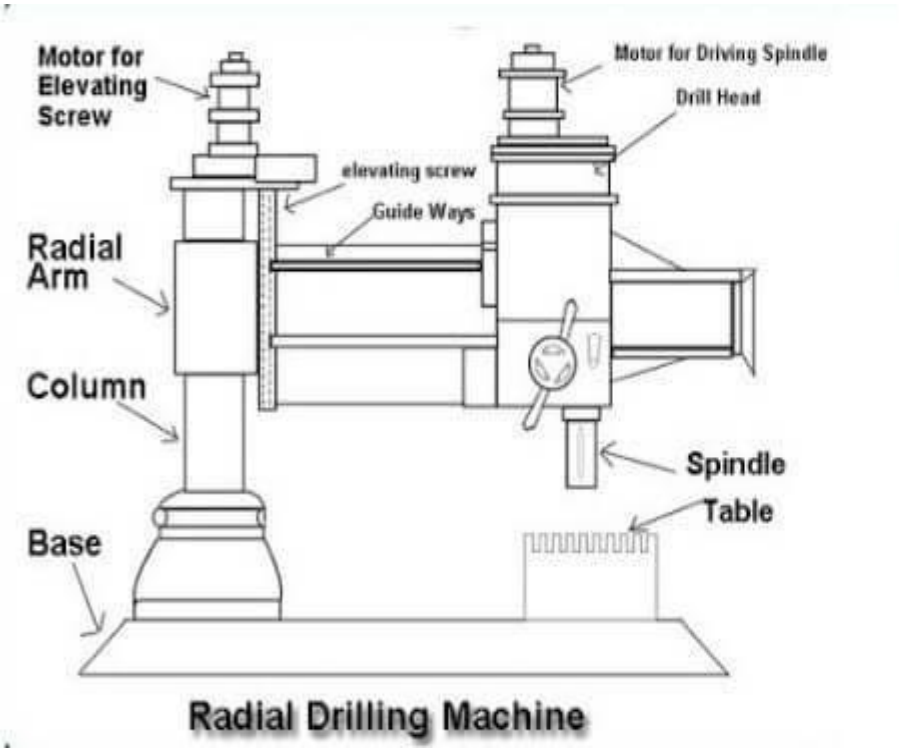

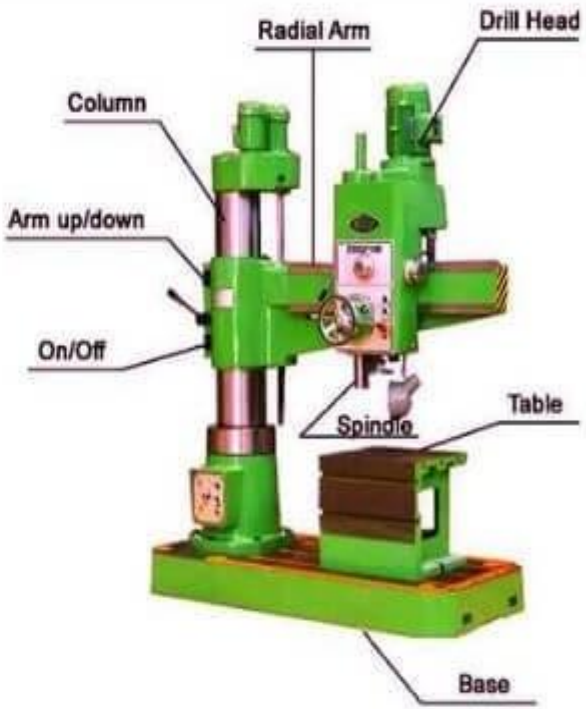

Source:-https://mechanicaljungle.com/working-of-radial-drilling-machine/

Parts of Radial Drilling Machine

The Parts of the Radial Drilling Machine are as follows.

- Base
- Column
- Radial Arm
- Motor for elevating the arm
- Elevating screw
- Guideways
- Motor for driving drill spindle
- Drill head
- Drill spindle
- Table

Working Principle Radial Drilling Machine

- When the power supply is given, the spindle rotates which was in conjunction with the motor. The Radial arm is adjusted w.r.t the type of operation and height of the workpiece. The spindle is connected to the chuck and the drill bit is placed in between the jaws of the chuck.

- The Drill head is adjusted on to the workpiece and a suitable feed is given. Then the drill bit drives into the workpiece very easily.

- **Drive Mechanism [Rack and Pinion Mechanism**]:

  When the hand wheel is rotated, then the Pinion which is attached to the rack also rotates which can convert the rotary motion to the linear motion and the driving mechanism is called as Rack and Pinion mechanism.

Advantages, Disadvantages and Applications of Radial Drilling Machine

The Advantages of Radial Drilling Machine are as follows.

- Radial Drilling Machine is advanced compared to the Bench_Drilling_machine.
- With the help of its radial arm, it can able to drill holes on the components which are larger than the space between the drill bit and the worktable.
- Works efficiently on different metals and wood materials.
- The worktable can be rotated through 360 degrees.
- It exhibits High Precision and Accuracy.

The disadvantages of Radial Drilling Machine are as follows.

- They are large machines and required more space to install.
- It has been designed for medium to large workpieces.

The applications of Radial Drilling Machine are as follows.

- They are used in industries for the massive production of components.
- They are used in Educational Institutions for performing lab experiments.
- They are used in Small scale and Large Scale Industries.

Drill Materials

The two most common types are

1. HSS drill - Low cost
2. Carbide- tipped drills - high production and in CNC machines
3. Other types are Solid Carbide drill, TiN coated drills, carbide coated masonry drills, parabolic drills, split point drill

Drilling and Drills

Types of drills —

Twist drill: most common drill.

Step drill: produces holes of two or more different diameters.

Core drill: used to make an existing hole bigger.

Drilling and Drills

Drilling operations

- Drilling Centre Hole
- Drilling Deep Holes
- Drilling Thin Material
- Drilling Pilot Hole

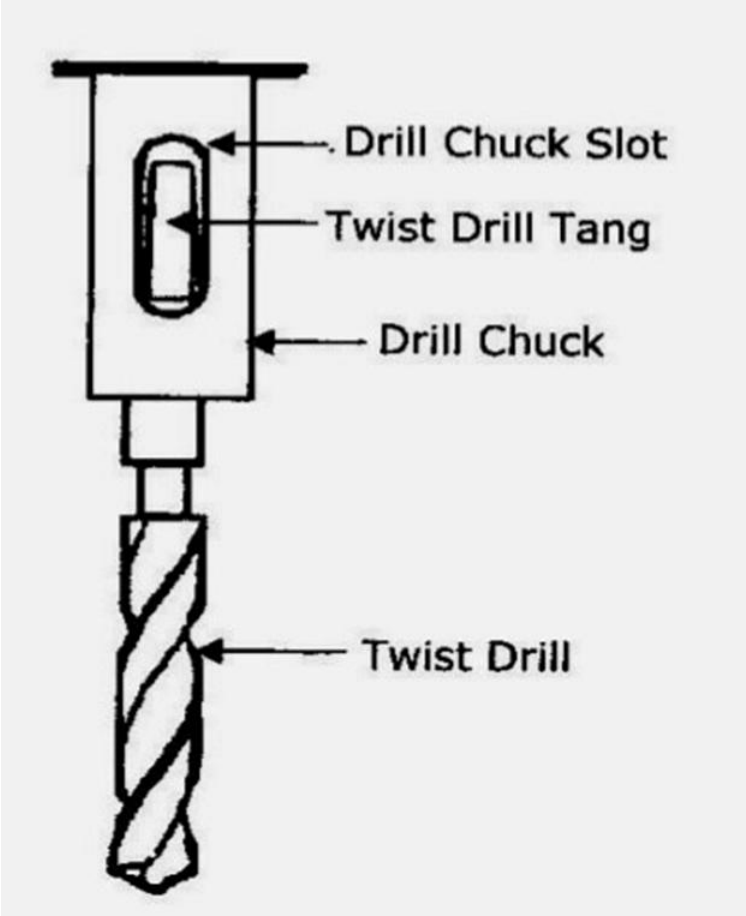

Source:- https://slidetodoc.com/unit-i-machine-tools-and-their-applications-syllabus/

Tool Nomenclature

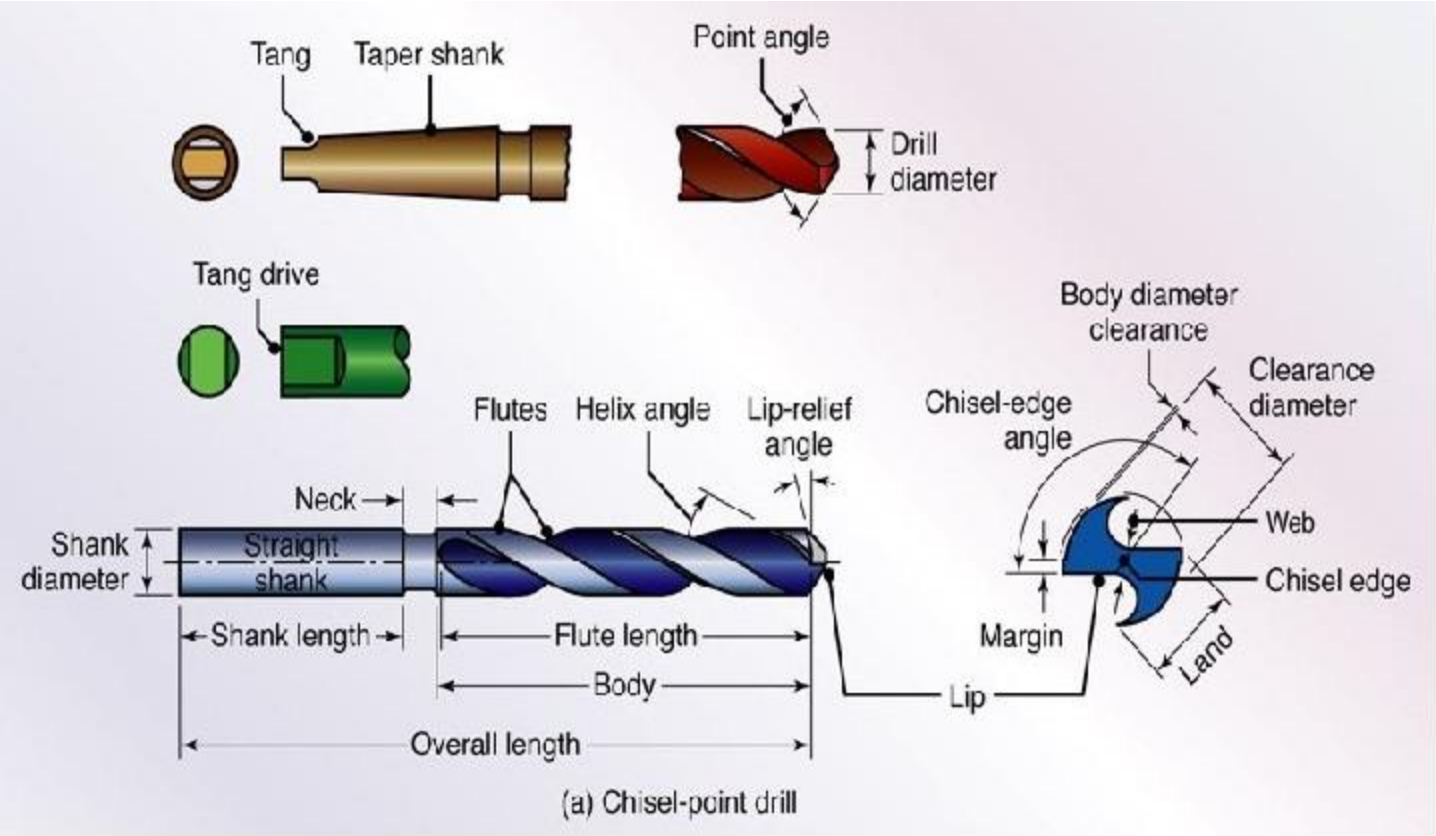

(a) Chisel-point drill

Tool holding devices

The different methods used for holding drill in a drill spindle are

- By directly fitting in the spindle hole.
- By using drill sleeve
- By using drill socket
- By using drill chuck

Work holding devices

- 1. Machine Table Vice

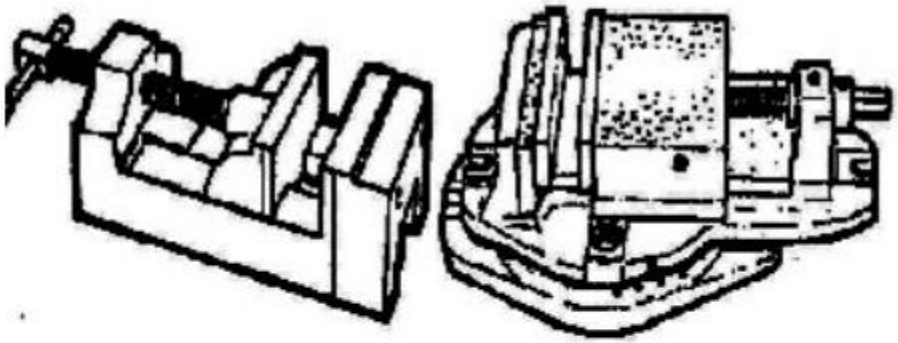

Standard machine table vice

Swivel vice

Work holding devices

- Step Blocks
- Clamps
- V-Blocks
- Angles
- Jigs
- T- Slots Bolt

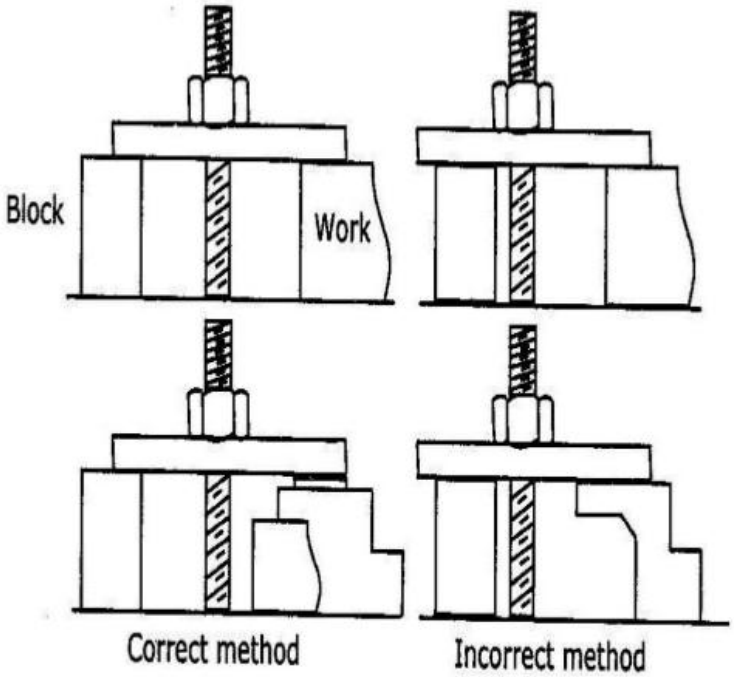

Drilling operations

Operations that can be performed in a drilling machine are

1. Drilling
2. Reaming
3. Boring
4. Counter boring
5. Countersinking
6. Tapping

Drilling operations

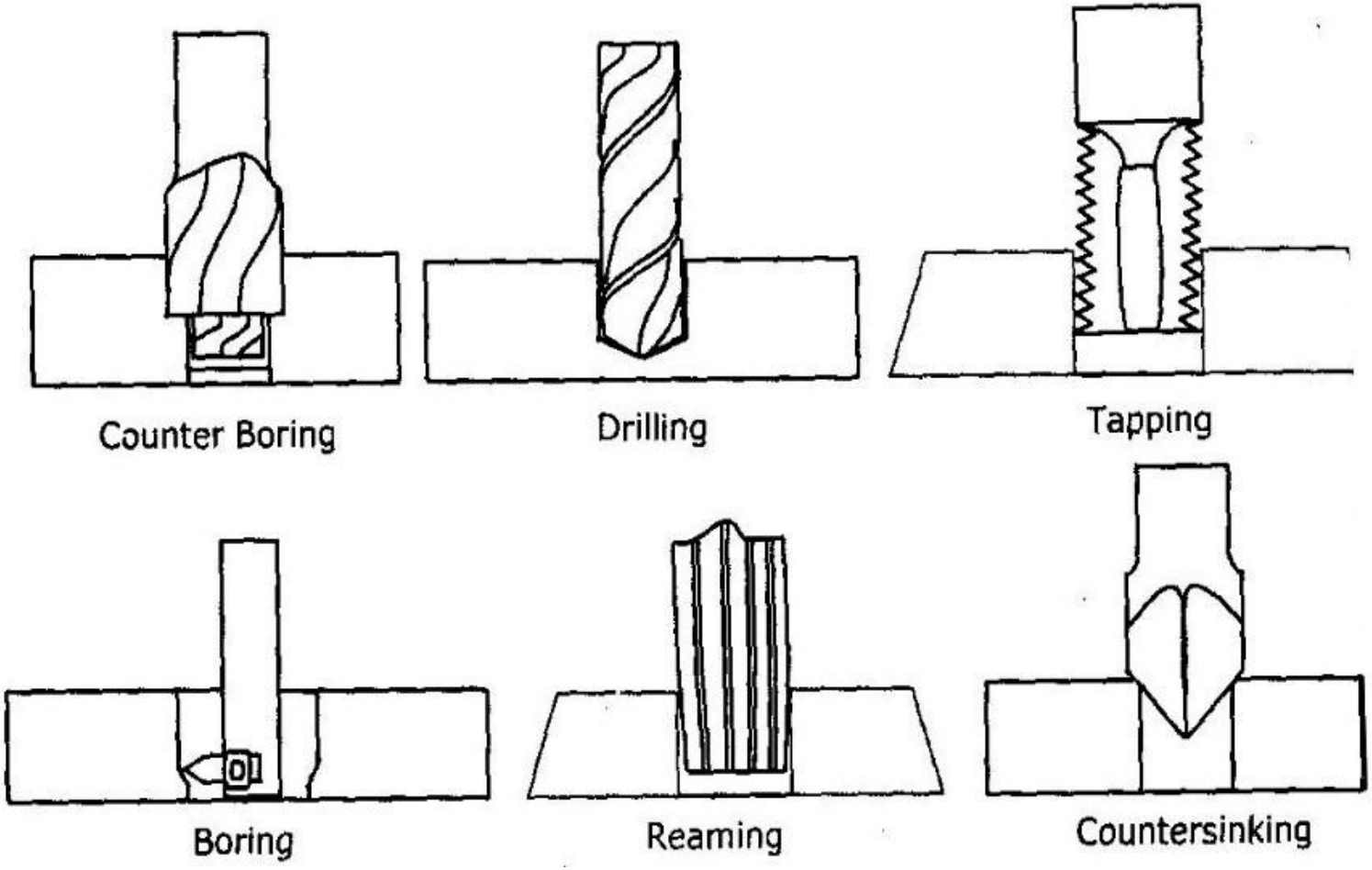

Drilling operations

Counter bore and spot facing

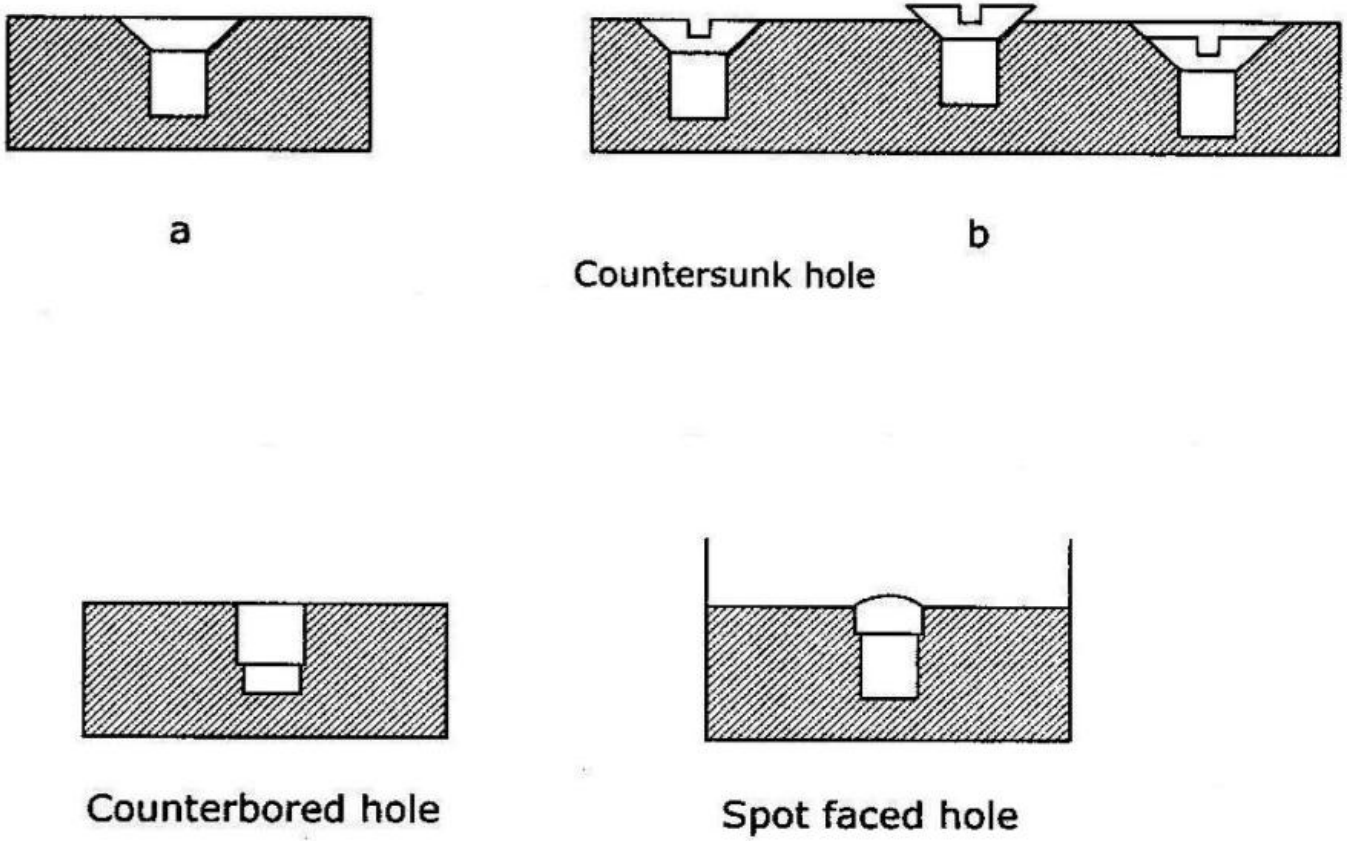

Types of Cutter

Reamers :-

- Multi tooth cutting tool
- Accurate way of sizing and finishing the pre-existing hole.
- Accuracy of ±0.005mm can be achieved

Boring Tool:-

- Single point cutting tool.
- Boring tool is held in the boring bar which has the shank.
- Accuracy of ±0.005mm can be achieved.

Types of Cutter

[Under section 3 of UGC Act 1956]

Types of cutters

Countersinks :-

Special angled cone shaped enlargement at the end of the hole

Cutting edges at the end of conical surface.

Cone angles of 60°, 82°, 90°, 100°, 110°, 120°

Counter Bore Tool:-

Special cutters uses a pilot to guide the cutting action .

Accommodates the heads of bolts.

Types of Cutter

Tapping:-

For cutting internal thread

Multi cutting edge tool.

Tapping is performed either by hand or by machine.

Minor dia of the thread is drilled and then tapping is done.

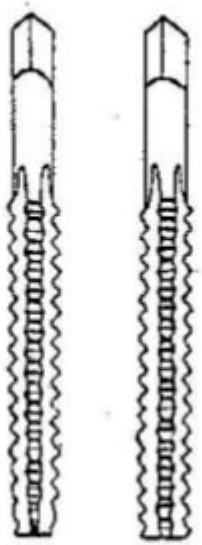

Intermediate Finisher

Hand Taps

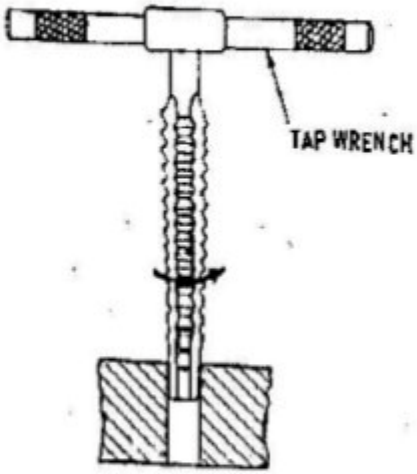

Hand Tapping using Tap Wrench

Empirical formula

Cutting Speed (v):-

It's the peripheral speed of the drill

$v = \Pi * D * N$ where

D = dia of the drill in m

N = Speed of rotation in rpm

Feed Rate (f):-

It's the movement of drill along the axis (rpm)

Depth of Cut (d):-

The distance from the machined surface to the drill axis

$d = D / 2$

Empirical formula

Material Removal Rate:-

It's the volume of material removed by the drill per unit time

$$MRR = (\Pi D^2 / 4) * f * N \quad mm^3 / min$$

Machining Time (T) :-

It depends upon the length (l) of the hole to be drilled , to the Speed (N) and feed (f) of the drill

$$t = L / f N \ min$$

Precautions for drilling machine

- Lubrication is important to remove heat and friction.
- Machines should be cleaned after use
- Chips should be removed using brush.
- T-slots, grooves, spindles sleeves, belts, pulley should be cleaned.
- Machines should be lightly oiled to prevent from rusting

.

Safety Precautions

- Do not support the work piece by hand – use work holding device.
- Use brush to clean the chip
- No adjustments while the machine is operating.
- Ensure for the cutting tools running straight before starting the operation.
- Never place tools on the drilling table.
- Avoid loose clothing and protect the eyes.
- Ease the feed if drill breaks inside the workpiece.

Thank You